FCC Part 96.47 Test Report

APPLICANT	:	OnePlus Technology (Shenzhen) Co., Ltd.
EQUIPMENT	:	Mobile Phone
BRAND NAME	:	1+, ONEPLUS
Model Name	:	CPH2583
FCC ID	:	2ABZ2-AA550
STANDARD	:	FCC Part 96.47
TEST DATE(S)	:	Sep. 27, 2023

We, Sporton International Inc. (ShenZhen), would like to declare that the tested sample has been evaluated in accordance with the test procedures and has been in compliance with the applicable technical standards.

The test results in this report apply exclusively to the tested model / sample. Without written approval of Sporton International Inc. (ShenZhen), the test report shall not be reproduced except in full.

Jason Jia

Approved by: Jason Jia

ACCREDITED
Cert #5145.01

Sporton International Inc. (ShenZhen)

1/F, 2/F, Bldg 5, Shiling Industrial Zone, Xinwei Village, Xili, Nanshan, Shenzhen, 518055

People's Republic of China

Table of Contents

HISTORY OF THIS TEST REPORT **3**

SUMMARY OF TEST RESULT **4**

1 GENERAL DESCRIPTION **5**

1.1 APPLICANT 5
1.2 MANUFACTURER 5
1.3 PRODUCT FEATURE OF EQUIPMENT UNDER TEST 5
1.4 PRODUCT SPECIFICATION OF EQUIPMENT UNDER TEST 5
1.5 TESTING LOCATION 6
1.6 TEST SOFTWARE 6
1.7 APPLICABLE STANDARDS 6

2 TEST CONFIGURATION OF EQUIPMENT UNDER TEST **7**

2.1 CONNECTION DIAGRAM OF TEST SYSTEM 7

3 END USER DEVICE ADDITIONAL REQUIREMENT **8**

3.1 TEST REQUIREMENT 8
3.2 TEST PROCEDURE 8
3.3 TEST RESULT 9

4 LIST OF MEASURING EQUIPMENT **11**

APPENDIX A. TEST SETUP PHOTO

History of this test report

Report No.	Version	Description	Issued Date
FG382311G	01	Initial issue of report	Oct, 20, 2023

Declaration of Conformity:
The test results with all measurement uncertainty excluded are presented in accordance with the regulation limits or requirements declared by manufacturers.
Comments and Explanations:
The declared of product specification for EUT presented in the report are provided by the manufacturer, and the manufacturer takes all the responsibilities for the accuracy of product specification.

Summary of Test Result

Report Clause	Ref Std. Clause	Test Items	Result (PASS/FAIL)	Remark
3	96.47	End User Device additional requirement	Pass	-

1 General Description

1.1 Applicant

OnePlus Technology (Shenzhen) Co., Ltd.
18C02, 18C03, 18C04, and 18C05, Shum Yip Terra Building, Binhe Avenue North, Futian District, Shenzhen, Guangdong, P.R. China.

1.2 Manufacturer

OnePlus Technology (Shenzhen) Co., Ltd.
18C02, 18C03, 18C04, and 18C05, Shum Yip Terra Building, Binhe Avenue North, Futian District, Shenzhen, Guangdong, P.R. China.

1.3 Product Feature of Equipment Under Test

Product Feature	
Equipment	Mobile Phone
Brand Name	1+, ONEPLUS
Model Name	CPH2583
FCC ID	2ABZ2-AA550
IMEI Code	865154060025193/865154060025185
HW Version	11
SW Version	OxygenOS V14.0
EUT Stage	Identical Prototype

Remark: The above EUT's information was declared by manufacturer. Please refer to the specifications or user's manual for more detailed description.

1.4 Product Specification of Equipment Under Test

Standards-related Product Specification	
Tx Frequency	LTE Band 48: 3550 MHz ~ 3700 MHz
Rx Frequency	LTE Band 48: 3550 MHz ~ 3700 MHz
Antenna Gain	<Ant.6>: -3.0 dBi <Ant.7>: -2.0 dBi <Ant.12>: -3.0 dBi <Ant.14>: -2.0 dBi
Type of Modulation	QPSK / 16QAM / 64QAM / 256QAM

1.5 Testing Location

Sporton International Inc. (Shenzhen) is accredited to ISO/IEC 17025:2017 by American Association for Laboratory Accreditation with Certificate Number 5145.01.

Test Firm	Sporton International Inc. (Shenzhen)		
Test Site Location	1/F, 2/F, Bldg 5, Shiling Industrial Zone, Xinwei Village, Xili, Nanshan, Shenzhen, 518055 People's Republic of China TEL: +86-755-86379589 FAX: +86-755-86379595		
Test Site No.	**Sporton Site No.**	**FCC Designation No.**	**FCC Test Firm Registration No.**
	DFS01-SZ	CN1256	421272
Test Engineer	Sam Zheng		
Temperature	24~26℃		
Relative Humidity	50~53 %		

1.6 Test Software

Item	Site	Manufactor	Name	Version
1.	DFS01-SZ	Sporton	DFS & Adaptivity Test Tools	1.0

1.7 Applicable Standards

- FCC Part 96.47
- FCC KDB 940660 D01 Part 96 CBRS Eqpt v03
- WINNF-TS-0122-V1.0.2 CBRS CBSD Test Specification

Remark: All test items were verified and recorded according to the standards and without any deviation during the test.

2 Test Configuration of Equipment Under Test

2.1 Connection Diagram of Test System

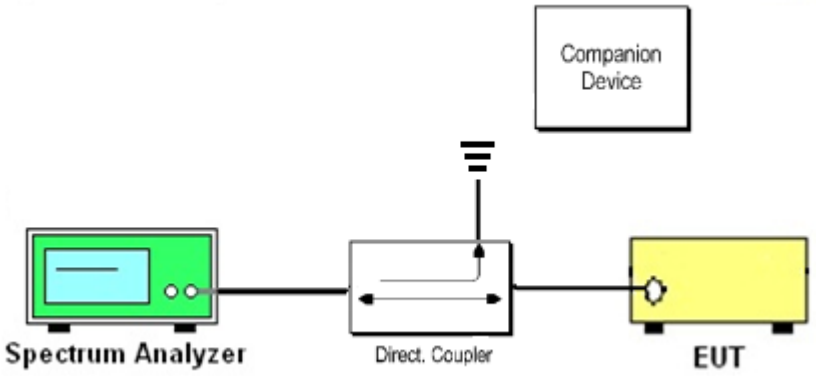

The companion device is certified CBRS (FCC ID: S9GQ710US02)

3 End User Device additional requirement

3.1 Test Requirement

FCC Part 96.47

(a) End User Devices may operate only if they can positively receive and decode an authorization signal transmitted by a CBSD, including the frequencies and power limits for their operation.

(1) An End User Device must discontinue operations, change frequencies, or change its operational power level within 10 seconds of receiving instructions from its associated CBSD.

3.2 Test Procedure

Following procedure can be done by applying WINNF-TS-0122-V1.0.2 CBRS CBSD Test Specification, use the certified Ruckus CBSD (FCC ID: S9GQ710US02) as companion device to show compliance with Part 96.47 requirement for End User Device (EUD):

1. Configure SAS granted CBSD to operate at frequency 3600-3620MHz & power level 13dBm/MHz
2. Enable AP service from Ruckus Cloud management
3. Check EUD Tx Frequency and power
4. Disable AP service from Ruckus Cloud management

a. Check EUD stops transmission within 10seconds.

5. Configure SAS granted CBSD to operate at frequency 3670-3690MHz & power level 8dBm/MHz
6. Enable AP service from Ruckus Cloud management
7. Check EUD Tx Frequency and power
8. Disable AP service from Ruckus Cloud management

a. Check EUD stops transmission within 10seconds.

3.3 Test Result

[Step 1] Setup with frequency 3600-3620MHz and power level 13dBm/MHz
[Step 3] Check EUD Tx Frequency and power

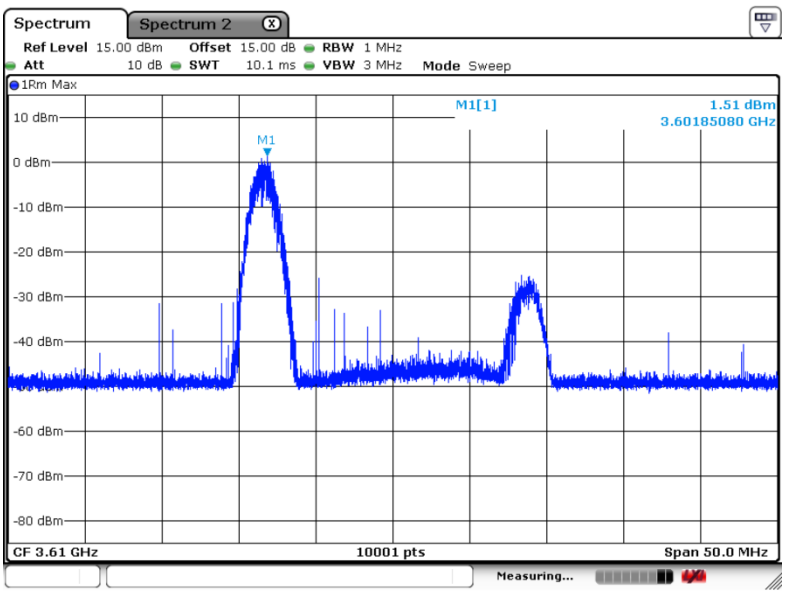

[Step 4.a.] EUD stops transmission within 10 seconds of receiving instructions from its associated CBSD.

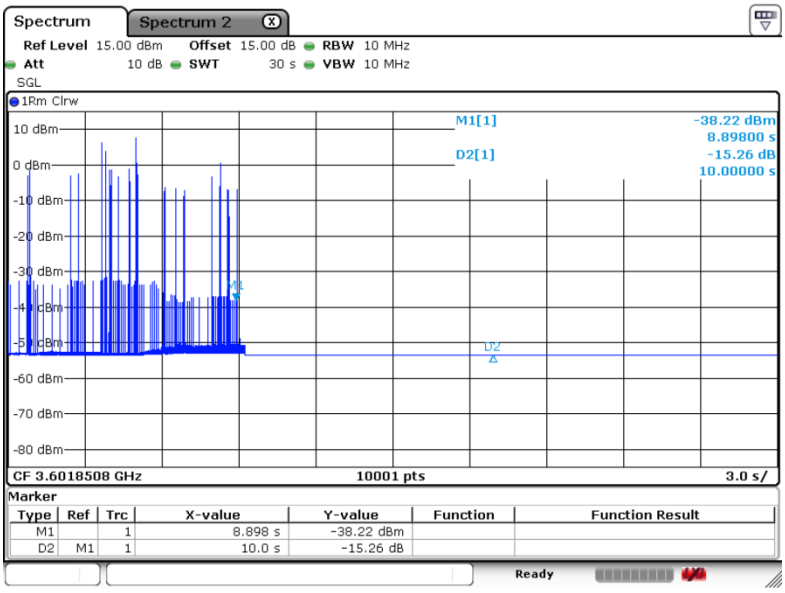

[Step 5] Setup with 3670-3690MHz & power level 8dBm/MHz

[Step 7] Check EUD Tx Frequency and power

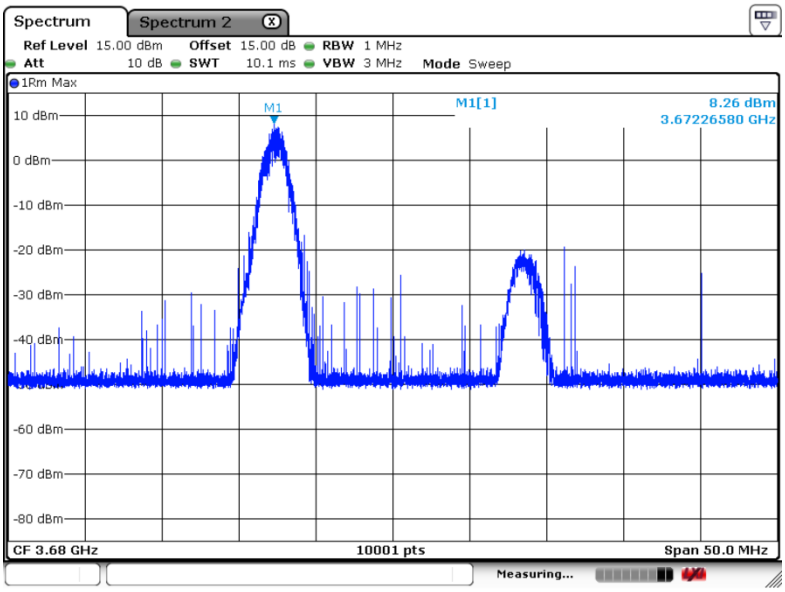

[Step 8.a.] After changing the frequency and power level,

The module (EUT) discontinues operations, change frequencies, or change its operational power level within 10 seconds of receiving instructions from its associated CBSD. Test result is PASS.

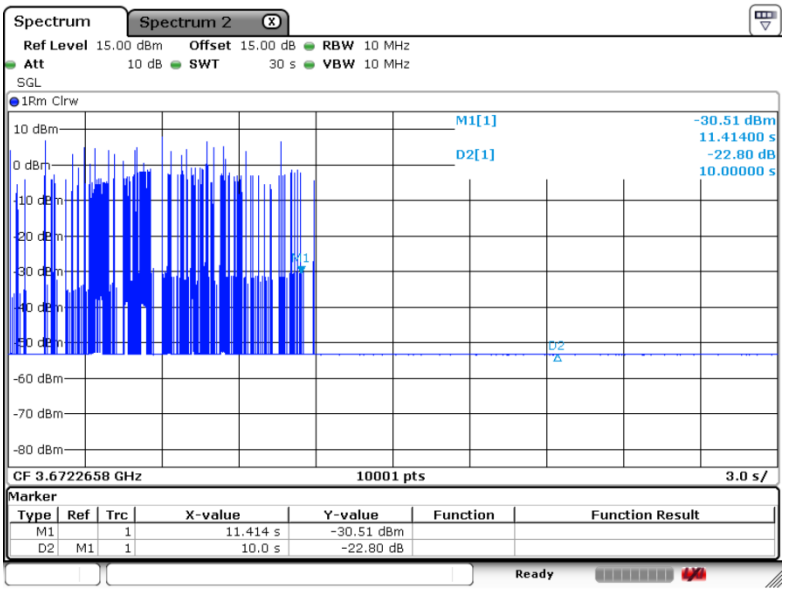

4 List of Measuring Equipment

Instrument	Manufacturer	Model No.	Serial No.	Characteristics	Calibration Date	Test Date	Due Date	Remark
Signal Analyzer	R&S	FSV7	101473	10Hz~7GHz	Dec. 27, 2022	Sep. 27, 2023	Dec. 26, 2023	Conducted (DFS01-SZ)
Combiner	TOJOIN	PS-2AM-0460	SZE14011007	0.4~6GHz	Sep. 05, 2023	Sep. 27, 2023	Sep. 04, 2024	Conducted (DFS01-SZ)

---------- THE END ----------