<TDD LTE SAR Measurement>

TDD LTE configuration setup for SAR measurement

SAR was tested with a fixed periodic duty factor according to the highest transmission duty factor implemented for the device and supported by 3GPP.

a. 3GPP TS 36.211 section 4.2 for Type 2 Frame Structure and Table 4.2-2 for uplink-downlink configurations
b. "special subframe S" contains both uplink and downlink transmissions, it has been taken into consideration to determine the transmission duty factor according to the worst case uplink and downlink cyclic prefix requirements for UpPTS
c. Establishing connections with base station simulators ensure a consistent means for testing SAR and recommended for evaluating SAR. The Anritsu MT8820C (firmware: #22.52#004) was used for LTE output power measurements and SAR testing.

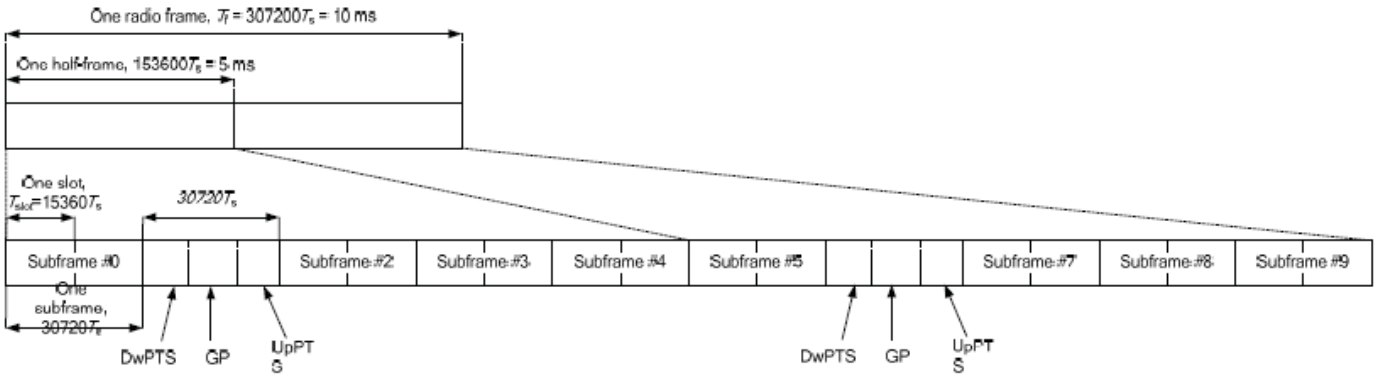

Figure 4.2-1: Frame structure type 2 (for 5 ms switch-point periodicity).

Table 4.2-2: Uplink-downlink configurations.

Uplink-downlink configuration	Downlink-to-Uplink Switch-point periodicity	Subframe number									
		0	1	2	3	4	5	6	7	8	9
0	5 ms	D	S	U	U	U	D	S	U	U	U
1	5 ms	D	S	U	U	D	D	S	U	U	D
2	5 ms	D	S	U	D	D	D	S	U	D	D
3	10 ms	D	S	U	U	U	D	D	D	D	D
4	10 ms	D	S	U	U	D	D	D	D	D	D
5	10 ms	D	S	U	D	D	D	D	D	D	D
6	5 ms	D	S	U	U	U	D	S	U	U	D

Table 4.2-1: Configuration of special subframe (lengths of DwPTS/GP/UpPTS).

Special subframe configuration	Normal cyclic prefix in downlink			Extended cyclic prefix in downlink		
	DwPTS	UpPTS		DwPTS	UpPTS	
		Normal cyclic prefix in uplink	Extended cyclic prefix in uplink		Normal cyclic prefix in uplink	Extended cyclic prefix in uplink
0	$6592 \cdot T_s$	$2192 \cdot T_s$	$2560 \cdot T_s$	$7680 \cdot T_s$	$2192 \cdot T_s$	$2560 \cdot T_s$
1	$19760 \cdot T_s$			$20480 \cdot T_s$		
2	$21952 \cdot T_s$			$23040 \cdot T_s$		
3	$24144 \cdot T_s$			$25600 \cdot T_s$		
4	$26336 \cdot T_s$			$7680 \cdot T_s$	$4384 \cdot T_s$	$5120 \cdot T_s$
5	$6592 \cdot T_s$	$4384 \cdot T_s$	$5120 \cdot T_s$	$20480 \cdot T_s$		
6	$19760 \cdot T_s$			$23040 \cdot T_s$		
7	$21952 \cdot T_s$			$12800 \cdot T_s$		
8	$24144 \cdot T_s$			-	-	-
9	$13168 \cdot T_s$			-	-	-

Special subframe (30720·T_s): Normal cyclic prefix in downlink (UpPTS)			
	Special subframe configuration	Normal cyclic prefix in uplink	Extended cyclic prefix in uplink
Uplink duty factor in one special subframe	0~4	7.13%	8.33%
	5~9	14.3%	16.7%

Special subframe(30720·T_s): Extended cyclic prefix in downlink (UpPTS)			
	Special subframe configuration	Normal cyclic prefix in uplink	Extended cyclic prefix in uplink
Uplink duty factor in one special subframe	0~3	7.13%	8.33%
	4~7	14.3%	16.7%

The highest duty factor is resulted from:

i. Uplink-downlink configuration: 0. In a half-frame consisted of 5 subfames, uplink operation is in 3 uplink subframes and 1 special subframe.

ii. special subframe configuration: 5-9 for normal cyclic prefix in downlink, 4-7 for extended cyclic prefix in downlink

iii. for special subframe with extended cyclic prefix in uplink, the total uplink duty factor in one half-frame is: (3+0.167)/5 = 63.3%

iv. for special subframe with normal cyclic prefix in uplink, the total uplink duty factor in one half-frame is: (3+0.143)/5 = 62.9%

v. For TDD LTE SAR measurement, the duty cycle 1:1.59 (62.9 %) was used perform testing and considering the theoretical duty cycle of 63.3% for extended cyclic prefix in the uplink, and the theoretical duty cycle of 62.9% for normal cyclic prefix in uplink, a scaling factor of extended cyclic prefix 63.3%/62.9% = 1.006 is applied to scale-up the measured SAR result. The scaled TDD LTE SAR = measured SAR (W/kg)* Tune-up Scaling Factor* scaling factor for extended cyclic prefix.

UAT Full Power Mode

<LTE Band 38>

BW [MHz]	Modulation	RB Size	RB Offset	Power Low Ch. / Freq.	Power Middle Ch. / Freq.	Power High Ch. / Freq.	Tune-up limit (dBm)	MPR (dB)
Channel				37850	38000	38150		
Frequency (MHz)				2580	2595	2610		
20	QPSK	1	0	21.19	21.12	21.09	21.8	0
20	QPSK	1	49	21.32	21.26	21.23		
20	QPSK	1	99	21.28	21.20	21.21		
20	QPSK	50	0	20.30	20.28	20.16	20.8	1
20	QPSK	50	24	20.38	20.35	20.25		
20	QPSK	50	50	20.33	20.23	20.17		
20	QPSK	100	0	20.26	20.25	20.16		
20	16QAM	1	0	20.77	20.77	20.78	20.8	1
20	16QAM	1	49	20.70	20.79	20.68		
20	16QAM	1	99	20.73	20.62	20.73		
20	16QAM	50	0	19.21	19.36	19.26	19.8	2
20	16QAM	50	24	19.44	19.45	19.39		
20	16QAM	50	50	19.39	19.28	19.19		
20	16QAM	100	0	19.22	19.30	19.21		
20	64QAM	1	0	19.06	18.98	19.08	19.8	2
20	64QAM	1	49	19.15	19.00	18.99		
20	64QAM	1	99	19.29	19.02	18.95		
20	64QAM	50	0	17.91	17.93	17.85	18.8	3
20	64QAM	50	24	18.10	17.97	17.93		
20	64QAM	50	50	18.05	17.81	17.77		
20	64QAM	100	0	18.02	17.91	17.88		
20	256QAM	1	0	16.19	16.12	16.09	16.8	2
20	256QAM	1	49	16.32	16.26	16.23		
20	256QAM	1	99	16.28	16.20	16.21		
20	256QAM	50	0	16.30	16.28	16.16	16.8	3
20	256QAM	50	24	16.33	16.31	16.25		
20	256QAM	50	50	16.33	16.23	16.17		
20	256QAM	100	0	16.26	16.25	16.16		
Channel				37825	38000	38175	Tune-up limit (dBm)	MPR (dB)
Frequency (MHz)				2577.5	2595	2612.5		
15	QPSK	1	0	21.19	21.31	21.26	21.8	0
15	QPSK	1	37	21.31	21.32	21.26		
15	QPSK	1	74	21.15	21.21	21.23		
15	QPSK	36	0	20.23	20.30	20.21	20.8	1
15	QPSK	36	20	20.44	20.39	20.22		
15	QPSK	36	39	20.28	20.27	20.25		
15	QPSK	75	0	20.25	20.33	20.16		
15	16QAM	1	0	20.77	20.72	20.63	20.8	1
15	16QAM	1	37	20.66	20.61	20.72		
15	16QAM	1	74	20.76	20.69	20.78		
15	16QAM	36	0	19.29	19.35	19.26	19.8	2
15	16QAM	36	20	19.40	19.48	19.37		
15	16QAM	36	39	19.39	19.34	19.24		
15	16QAM	75	0	19.34	19.30	19.18		
15	64QAM	1	0	19.08	18.99	18.97	19.8	2
15	64QAM	1	37	19.17	19.09	19.10		
15	64QAM	1	74	19.18	19.03	18.92		
15	64QAM	36	0	17.98	17.90	17.97	18.8	3
15	64QAM	36	20	18.18	18.00	17.95		
15	64QAM	36	39	18.17	17.89	17.90		

15	64QAM	75	0	18.04	17.95	17.88		
15	256QAM	1	0	16.14	16.07	16.06	16.8	2
15	256QAM	1	37	16.32	16.24	16.17		
15	256QAM	1	74	16.26	16.11	16.20		
15	256QAM	36	0	16.22	16.28	16.16	16.8	3
15	256QAM	36	20	16.30	16.27	16.17		
15	256QAM	36	39	16.24	16.17	16.07		
15	256QAM	75	0	16.23	16.22	16.09		
Channel				37800	38000	38200	Tune-up limit (dBm)	MPR (dB)
Frequency (MHz)				2575	2595	2615		
10	QPSK	1	0	20.58	20.98	20.98	21.8	0
10	QPSK	1	25	20.94	20.97	20.87		
10	QPSK	1	49	20.76	20.96	20.87		
10	QPSK	25	0	19.89	20.00	19.92	20.8	1
10	QPSK	25	12	20.13	20.10	20.00		
10	QPSK	25	25	20.12	20.08	19.98		
10	QPSK	50	0	20.01	20.08	19.98		
10	16QAM	1	0	20.29	20.65	20.51	20.8	1
10	16QAM	1	25	20.62	20.66	20.60		
10	16QAM	1	49	20.37	20.67	20.55		
10	16QAM	25	0	18.97	19.12	18.98	19.8	2
10	16QAM	25	12	19.14	19.20	19.15		
10	16QAM	25	25	19.03	19.08	19.00		
10	16QAM	50	0	19.13	19.07	18.99		
10	64QAM	1	0	18.51	19.00	18.95	19.8	2
10	64QAM	1	25	18.88	18.69	18.72		
10	64QAM	1	49	18.76	18.92	18.71		
10	64QAM	25	0	17.72	17.76	17.73	18.8	3
10	64QAM	25	12	17.99	17.83	17.86		
10	64QAM	25	25	18.00	17.80	17.81		
10	64QAM	50	0	17.84	17.70	17.70		
10	256QAM	1	0	16.11	16.02	16.03	16.8	2
10	256QAM	1	25	16.28	16.23	16.16		
10	256QAM	1	49	16.18	16.10	16.10		
10	256QAM	25	0	16.19	16.20	16.10	16.8	3
10	256QAM	25	12	16.22	16.21	16.08		
10	256QAM	25	25	16.24	16.15	16.07		
10	256QAM	50	0	16.22	16.17	16.05		
Channel				37775	38000	38225	Tune-up limit (dBm)	MPR (dB)
Frequency (MHz)				2572.5	2595	2617.5		
5	QPSK	1	0	20.84	20.93	20.78	21.8	0
5	QPSK	1	12	21.01	21.07	20.94		
5	QPSK	1	24	20.95	21.00	20.92		
5	QPSK	12	0	20.02	20.07	20.03	20.8	1
5	QPSK	12	7	20.13	20.12	19.98		
5	QPSK	12	13	20.05	20.10	20.03		
5	QPSK	25	0	20.02	20.15	20.00		
5	16QAM	1	0	20.49	20.65	20.49	20.8	1
5	16QAM	1	12	20.55	20.67	20.53		
5	16QAM	1	24	20.59	20.68	20.51		
5	16QAM	12	0	18.96	19.16	18.97	19.8	2
5	16QAM	12	7	19.08	19.19	19.03		
5	16QAM	12	13	19.05	19.08	18.98		
5	16QAM	25	0	19.17	19.20	19.03		
5	64QAM	1	0	18.81	18.72	18.62	19.8	2
5	64QAM	1	12	18.94	18.73	18.72		

5	64QAM	1	24	18.92	18.83	18.72		
5	64QAM	12	0	17.81	17.78	17.70	18.8	3
5	64QAM	12	7	17.96	17.81	17.77		
5	64QAM	12	13	17.93	17.79	17.73		
5	64QAM	25	0	17.95	17.77	17.74		
5	256QAM	1	0	16.08	16.00	16.01	16.8	2
5	256QAM	1	12	16.27	16.15	16.14		
5	256QAM	1	24	16.11	16.01	16.08		
5	256QAM	12	0	16.18	16.20	16.09	16.8	3
5	256QAM	12	7	16.19	16.12	16.05		
5	256QAM	12	13	16.15	16.08	16.01		
5	256QAM	25	0	16.15	16.08	15.98		

<LTE Band 41_PC3>

BW [MHz]	Modulation	RB Size	RB Offset	Power Low Ch. / Freq.	Power Low Middle Ch. / Freq.	Power Middle Ch. / Freq.	Power High Middle Ch. / Freq.	Power High Ch. / Freq.	Tune-up limit (dBm)	MPR (dB)
Channel				39750	40185	40620	41055	41490		
Frequency (MHz)				2506	2549.5	2593	2636.5	2680		
20	QPSK	1	0	21.34	21.27	21.35	21.25	21.08	21.8	0
20	QPSK	1	49	21.43	21.35	21.47	21.27	21.15		
20	QPSK	1	99	21.26	21.24	21.27	21.17	21.12		
20	QPSK	50	0	20.04	20.02	20.11	20.00	19.85	20.8	1
20	QPSK	50	24	20.13	20.12	20.29	20.10	20.05		
20	QPSK	50	50	20.19	20.17	20.24	20.15	20.05		
20	QPSK	100	0	20.15	20.09	20.16	20.01	19.90		
20	16QAM	1	0	20.15	20.11	19.88	19.93	19.63	20.8	1
20	16QAM	1	49	20.03	20.12	20.30	20.24	20.06		
20	16QAM	1	99	20.02	20.15	20.02	19.77	19.93		
20	16QAM	50	0	19.05	19.02	19.14	19.07	18.89	19.8	2
20	16QAM	50	24	19.05	19.12	19.25	19.15	19.11		
20	16QAM	50	50	19.02	19.13	19.27	19.07	19.09		
20	16QAM	100	0	18.98	19.03	19.13	19.10	18.99		
20	64QAM	1	0	18.60	18.72	18.30	18.41	18.23	19.8	2
20	64QAM	1	49	18.53	18.78	18.69	18.73	18.64		
20	64QAM	1	99	18.50	18.75	18.41	18.22	18.54		
20	64QAM	50	0	17.91	17.98	17.76	17.82	17.80	18.8	3
20	64QAM	50	24	17.83	18.07	17.89	17.86	18.03		
20	64QAM	50	50	17.72	18.02	17.97	17.76	17.95		
20	64QAM	100	0	17.72	17.89	17.84	17.87	17.84		
20	256QAM	1	0	16.34	16.27	16.35	16.25	16.08	16.8	2
20	256QAM	1	49	16.42	16.35	16.43	16.27	16.15		
20	256QAM	1	99	16.26	16.24	16.27	16.17	16.12		
20	256QAM	50	0	16.04	16.02	16.11	16.00	15.85	16.8	3
20	256QAM	50	24	16.13	16.12	16.29	16.10	16.05		
20	256QAM	50	50	16.19	16.17	16.24	16.15	16.05		
20	256QAM	100	0	16.15	16.09	16.16	16.01	15.90		
Channel				39725	40173	40620	41068	41515	Tune-up limit (dBm)	MPR (dB)
Frequency (MHz)				2503.5	2548.3	2593	2637.8	2682.5		
15	QPSK	1	0	20.88	20.63	20.86	20.78	20.58	21.8	0
15	QPSK	1	37	20.90	20.84	21.10	20.94	20.84		
15	QPSK	1	74	20.81	20.73	20.99	20.70	20.84		
15	QPSK	36	0	19.96	19.84	20.03	19.96	19.78	20.8	1
15	QPSK	36	20	19.95	20.03	20.15	20.06	19.99		
15	QPSK	36	39	19.93	19.95	20.18	19.98	19.97		
15	QPSK	75	0	19.90	19.92	20.08	20.01	19.86		
15	16QAM	1	0	20.04	19.87	19.94	19.97	19.67	20.8	1
15	16QAM	1	37	19.97	19.96	20.17	20.12	19.91		
15	16QAM	1	74	19.95	19.85	20.06	19.90	19.96		
15	16QAM	36	0	18.93	18.83	18.98	18.92	18.75	19.8	2
15	16QAM	36	20	18.93	18.97	19.07	19.05	18.94		
15	16QAM	36	39	18.91	18.92	19.16	18.96	18.92		
15	16QAM	75	0	18.96	18.98	19.07	19.06	18.86		
15	64QAM	1	0	18.59	18.56	18.24	18.46	18.21	19.8	2
15	64QAM	1	37	18.39	18.71	18.51	18.55	18.60		
15	64QAM	1	74	18.29	18.57	18.46	18.25	18.54		
15	64QAM	36	0	17.69	17.76	17.66	17.70	17.70	18.8	3
15	64QAM	36	20	17.68	17.89	17.81	17.78	17.84		
15	64QAM	36	39	17.69	17.81	17.87	17.70	17.83		
15	64QAM	75	0	17.67	17.84	17.82	17.79	17.77		

15	256QAM	1	0	16.26	16.23	16.26	16.18	16.05	16.8	2
15	256QAM	1	37	16.40	16.28	16.39	16.17	16.10		
15	256QAM	1	74	16.17	16.14	16.25	16.07	16.02		
15	256QAM	36	0	16.04	15.97	16.05	15.94	15.81	16.8	3
15	256QAM	36	20	16.04	16.09	16.26	16.05	15.98		
15	256QAM	36	39	16.16	16.11	16.23	16.06	16.03		
15	256QAM	75	0	16.05	16.04	16.15	15.91	15.80		
Channel				39700	40160	40620	41080	41540	Tune-up limit (dBm)	MPR (dB)
Frequency (MHz)				2501	2547	2593	2639	2685		
10	QPSK	1	0	20.70	20.45	20.70	20.54	20.64	21.8	0
10	QPSK	1	25	20.72	20.76	21.00	20.83	20.75		
10	QPSK	1	49	20.72	20.51	20.72	20.55	20.62		
10	QPSK	25	0	19.88	19.78	19.99	19.85	19.76	20.8	1
10	QPSK	25	12	19.93	19.91	20.05	19.89	19.83		
10	QPSK	25	25	19.96	19.86	20.07	19.84	19.81		
10	QPSK	50	0	19.97	19.86	19.96	19.79	19.73		
10	16QAM	1	0	19.96	19.69	19.87	19.79	19.66	20.8	1
10	16QAM	1	25	19.89	19.93	20.08	20.00	19.90		
10	16QAM	1	49	19.87	19.71	19.86	19.74	19.61		
10	16QAM	25	0	18.94	18.79	18.99	18.84	18.75	19.8	2
10	16QAM	25	12	19.03	18.99	19.03	18.92	18.85		
10	16QAM	25	25	19.06	18.90	19.07	18.89	18.83		
10	16QAM	50	0	19.02	18.88	18.97	18.86	18.81		
10	64QAM	1	0	18.51	18.54	18.21	18.30	18.32	19.8	2
10	64QAM	1	25	18.21	18.60	18.34	18.44	18.44		
10	64QAM	1	49	18.80	18.31	18.45	18.26	18.25		
10	64QAM	25	0	17.64	17.82	17.67	17.61	17.58	18.8	3
10	64QAM	25	12	17.70	17.91	17.72	17.66	17.55		
10	64QAM	25	25	17.59	17.82	17.70	17.66	17.54		
10	64QAM	50	0	17.50	17.77	17.63	17.55	17.42		
10	256QAM	1	0	16.17	16.19	16.22	16.14	15.96	16.8	2
10	256QAM	1	25	16.32	16.24	16.37	16.13	16.01		
10	256QAM	1	49	16.15	16.13	16.22	16.02	15.92		
10	256QAM	25	0	16.01	15.96	15.99	15.93	15.79	16.8	3
10	256QAM	25	12	16.01	16.05	16.21	15.98	15.98		
10	256QAM	25	25	16.09	16.04	16.13	16.03	15.99		
10	256QAM	50	0	15.99	15.99	16.10	15.84	15.78		
Channel				39675	40148	40620	41093	41565	Tune-up limit (dBm)	MPR (dB)
Frequency (MHz)				2498.5	2545.8	2593	2640.30	2687.5		
5	QPSK	1	0	20.90	20.80	20.91	20.82	20.74	21.8	0
5	QPSK	1	12	20.79	20.84	20.97	20.90	20.79		
5	QPSK	1	24	20.79	20.82	20.92	20.83	20.76		
5	QPSK	12	0	19.91	19.90	20.05	19.91	19.88	20.8	1
5	QPSK	12	7	19.94	19.98	20.06	19.98	19.93		
5	QPSK	12	13	19.90	19.92	20.09	19.99	19.88		
5	QPSK	25	0	19.87	19.91	20.03	19.96	19.88		
5	16QAM	1	0	19.94	19.87	20.11	19.94	19.91	20.8	1
5	16QAM	1	12	19.99	20.11	20.23	20.12	19.96		
5	16QAM	1	24	19.96	19.95	20.14	20.00	19.91		
5	16QAM	12	0	18.89	18.92	19.03	18.89	18.87	19.8	2
5	16QAM	12	7	18.93	18.93	19.07	19.00	18.90		
5	16QAM	12	13	18.88	18.89	19.09	18.92	18.86		
5	16QAM	25	0	18.93	18.96	19.04	18.96	18.92		
5	64QAM	1	0	18.47	18.52	18.36	18.42	18.41	19.8	2
5	64QAM	1	12	18.27	18.63	18.41	18.49	18.41		
5	64QAM	1	24	18.35	18.67	18.42	18.52	18.40		

5	64QAM	12	0	17.61	17.87	17.72	17.66	17.68	18.8	3
5	64QAM	12	7	17.57	17.89	17.81	17.77	17.70		
5	64QAM	12	13	17.56	17.88	17.79	17.71	17.73		
5	64QAM	25	0	17.59	17.86	17.79	17.75	17.75		
5	256QAM	1	0	16.11	16.09	16.19	16.13	15.88	16.8	2
5	256QAM	1	12	16.30	16.20	16.31	16.13	15.99		
5	256QAM	1	24	16.12	16.03	16.20	15.95	15.90		
5	256QAM	12	0	15.96	15.91	15.91	15.87	15.69	16.8	3
5	256QAM	12	7	16.00	16.04	16.17	15.92	15.91		
5	256QAM	12	13	16.05	16.00	16.05	16.02	15.98		
5	256QAM	25	0	15.99	15.96	16.10	15.84	15.70		

<LTE Band 41_PC2>

BW [MHz]	Modulation	RB Size	RB Offset	Power Low Ch. / Freq.	Power Low Middle Ch. / Freq.	Power Middle Ch. / Freq.	Power High Middle Ch. / Freq.	Power High Ch. / Freq.	Tune-up limit (dBm)	MPR (dB)
Channel				39750	40185	40620	41055	41490		
Frequency (MHz)				2506	2549.5	2593	2636.5	2680		
20	QPSK	1	0	23.64	23.71	23.76	23.57	23.53	24.3	0
20	QPSK	1	49	23.73	23.77	23.84	23.65	23.64		
20	QPSK	1	99	23.66	23.74	23.77	23.61	23.55		
20	QPSK	50	0	22.65	22.73	22.80	22.53	22.49	23.3	1
20	QPSK	50	24	22.74	22.84	22.93	22.57	22.54		
20	QPSK	50	50	22.79	22.88	22.92	22.72	22.63		
20	QPSK	100	0	22.68	22.75	22.85	22.57	22.56		
20	16QAM	1	0	23.09	23.20	22.94	23.01	22.75	23.3	1
20	16QAM	1	49	23.10	23.22	23.29	23.23	23.22		
20	16QAM	1	99	23.12	23.24	23.03	22.81	23.01		
20	16QAM	50	0	21.57	21.78	21.69	21.63	21.52	22.3	2
20	16QAM	50	24	21.63	21.86	21.90	21.79	21.67		
20	16QAM	50	50	21.60	21.86	21.78	21.63	21.67		
20	16QAM	100	0	21.60	21.79	21.75	21.64	21.54		
20	64QAM	1	0	21.12	21.21	20.94	21.08	20.89	22.3	2
20	64QAM	1	49	21.30	21.24	21.41	21.46	21.38		
20	64QAM	1	99	21.36	21.43	21.17	21.00	21.31		
20	64QAM	50	0	20.41	20.37	20.39	20.39	20.16	21.3	3
20	64QAM	50	24	20.37	20.50	20.40	20.19	20.48		
20	64QAM	50	50	20.31	20.57	20.39	20.22	20.45		
20	64QAM	100	0	20.20	20.26	20.40	20.15	20.34		
20	256QAM	1	0	18.64	18.71	18.76	18.57	18.53	19.3	2
20	256QAM	1	49	18.73	18.77	18.84	18.65	18.64		
20	256QAM	1	99	18.66	18.74	18.77	18.61	18.55		
20	256QAM	50	0	18.65	18.73	18.77	18.53	18.49	19.3	3
20	256QAM	50	24	18.74	18.84	18.81	18.57	18.54		
20	256QAM	50	50	18.75	18.78	18.80	18.62	18.63		
20	256QAM	100	0	18.68	18.75	18.85	18.57	18.56		
Channel				39725	40173	40620	41068	41515	Tune-up limit (dBm)	MPR (dB)
Frequency (MHz)				2503.5	2548.3	2593	2637.8	2682.5		
15	QPSK	1	0	23.57	23.47	23.51	23.45	23.19	24.3	0
15	QPSK	1	37	23.57	23.72	23.72	23.61	23.58		
15	QPSK	1	74	23.43	23.47	23.66	23.33	23.56		
15	QPSK	36	0	22.56	22.66	22.70	22.67	22.41	23.3	1
15	QPSK	36	20	22.60	22.84	22.82	22.79	22.61		
15	QPSK	36	39	22.63	22.80	22.88	22.70	22.61		
15	QPSK	75	0	22.60	22.75	22.65	22.66	22.56		
15	16QAM	1	0	23.11	23.09	23.11	23.10	22.94	23.3	1
15	16QAM	1	37	23.14	23.22	23.26	23.26	23.12		
15	16QAM	1	74	23.17	23.07	23.19	23.05	23.04		
15	16QAM	36	0	21.63	21.71	21.73	21.66	21.61	22.3	2
15	16QAM	36	20	21.68	21.88	21.90	21.81	21.70		
15	16QAM	36	39	21.72	21.89	21.86	21.67	21.75		
15	16QAM	75	0	21.66	21.79	21.81	21.71	21.53		
15	64QAM	1	0	21.02	21.14	21.19	21.18	21.06	22.3	2
15	64QAM	1	37	21.29	21.29	21.53	21.03	21.44		
15	64QAM	1	74	21.19	21.32	21.44	21.03	21.37		
15	64QAM	36	0	20.16	20.19	20.31	20.24	20.29	21.3	3
15	64QAM	36	20	20.27	20.22	20.41	20.30	20.43		
15	64QAM	36	39	20.28	20.48	20.48	20.28	20.41		
15	64QAM	75	0	20.23	20.34	20.45	20.15	20.34		

15	256QAM	1	0	18.54	18.66	18.76	18.50	18.43	19.3	2
15	256QAM	1	37	18.72	18.73	18.84	18.62	18.55		
15	256QAM	1	74	18.58	18.71	18.72	18.57	18.48		
15	256QAM	36	0	18.62	18.63	18.68	18.46	18.43	19.3	3
15	256QAM	36	20	18.66	18.81	18.75	18.54	18.51		
15	256QAM	36	39	18.73	18.76	18.77	18.52	18.62		
15	256QAM	75	0	18.67	18.72	18.85	18.53	18.49		
Channel				39700	40160	40620	41080	41540	Tune-up limit (dBm)	MPR (dB)
Frequency (MHz)				2501	2547	2593	2639	2685		
10	QPSK	1	0	23.31	23.15	23.25	23.15	23.07	24.3	0
10	QPSK	1	25	23.3	23.47	23.5	23.33	23.3		
10	QPSK	1	49	23.31	23.29	23.27	23.17	23.01		
10	QPSK	25	0	22.38	22.48	22.51	22.44	22.38	23.3	1
10	QPSK	25	12	22.49	22.64	22.63	22.52	22.43		
10	QPSK	25	25	22.38	22.57	22.57	22.43	22.35		
10	QPSK	50	0	22.36	22.59	22.57	22.44	22.31		
10	16QAM	1	0	22.92	22.83	22.81	22.72	22.7	23.3	1
10	16QAM	1	25	22.96	23.11	23.18	23.01	22.95		
10	16QAM	1	49	22.94	22.94	22.85	22.77	22.66		
10	16QAM	25	0	21.51	21.63	21.55	21.56	21.39	22.3	2
10	16QAM	25	12	21.49	21.75	21.68	21.53	21.39		
10	16QAM	25	25	21.47	21.71	21.61	21.58	21.41		
10	16QAM	50	0	21.47	21.64	21.59	21.5	21.41		
10	64QAM	1	0	20.86	21.07	21.02	20.87	20.90	22.3	2
10	64QAM	1	25	21.20	21.45	21.53	21.07	21.24		
10	64QAM	1	49	21.17	21.17	21.11	20.95	20.97		
10	64QAM	25	0	19.96	20.30	20.14	20.11	20.14	21.3	3
10	64QAM	25	12	20.21	20.46	20.31	20.20	20.20		
10	64QAM	25	25	20.07	20.28	20.39	20.09	20.11		
10	64QAM	50	0	19.98	20.29	20.20	19.98	20.09		
10	256QAM	1	0	18.48	18.61	18.70	18.39	18.44	19.3	2
10	256QAM	1	25	18.69	18.62	18.75	18.49	18.58		
10	256QAM	1	49	18.56	18.63	18.64	18.53	18.44		
10	256QAM	25	0	18.51	18.70	18.74	18.41	18.43	19.3	3
10	256QAM	25	12	18.61	18.78	18.71	18.54	18.48		
10	256QAM	25	25	18.67	18.74	18.60	18.49	18.45		
10	256QAM	50	0	18.56	18.64	18.75	18.41	18.49		
Channel				39675	40148	40620	41093	41565	Tune-up limit (dBm)	MPR (dB)
Frequency (MHz)				2498.5	2545.8	2593	2640.30	2687.5		
5	QPSK	1	0	23.20	23.32	23.45	23.27	23.29	24.3	0
5	QPSK	1	12	23.32	23.48	23.59	23.47	23.42		
5	QPSK	1	24	23.33	23.47	23.54	23.38	23.27		
5	QPSK	12	0	22.43	22.64	22.62	22.46	22.44	23.3	1
5	QPSK	12	7	22.47	22.67	22.56	22.59	22.46		
5	QPSK	12	13	22.42	22.66	22.62	22.48	22.50		
5	QPSK	25	0	22.40	22.60	22.54	22.57	22.44		
5	16QAM	1	0	22.94	23.03	23.12	22.99	23.01	23.3	1
5	16QAM	1	12	22.99	23.17	23.11	23.00	23.02		
5	16QAM	1	24	23.01	23.14	23.11	23.05	22.98		
5	16QAM	12	0	21.39	21.63	21.59	21.46	21.41	22.3	2
5	16QAM	12	7	21.46	21.66	21.64	21.59	21.45		
5	16QAM	12	13	21.42	21.63	21.60	21.53	21.47		
5	16QAM	25	0	21.46	21.66	21.69	21.58	21.54		
5	64QAM	1	0	20.59	21.18	21.27	20.84	21.18	22.3	2
5	64QAM	1	12	20.74	21.03	21.20	21.14	21.23		
5	64QAM	1	24	21.00	21.15	21.31	20.68	21.22		

5	64QAM	12	0	19.77	20.36	20.32	20.14	20.23	21.3	3
5	64QAM	12	7	19.84	20.43	20.26	19.97	20.27		
5	64QAM	12	13	19.69	20.28	20.30	20.09	20.20		
5	64QAM	25	0	19.83	20.33	20.32	20.11	20.21		
5	256QAM	1	0	18.38	18.55	18.63	18.36	18.37	19.3	2
5	256QAM	1	12	18.63	18.55	18.67	18.39	18.57		
5	256QAM	1	24	18.49	18.54	18.62	18.46	18.38		
5	256QAM	12	0	18.50	18.63	18.66	18.34	18.34	19.3	3
5	256QAM	12	7	18.55	18.75	18.63	18.53	18.40		
5	256QAM	12	13	18.62	18.70	18.50	18.44	18.38		
5	256QAM	25	0	18.55	18.55	18.69	18.34	18.49		

<LTE Band 48>

BW [MHz]	Modulation	RB Size	RB Offset	Power Low Ch. / Freq.	Power Low Middle Ch. / Freq.	Power High Middle Ch. / Freq.	Power High Ch. / Freq.	Tune-up limit (dBm)	MPR (dB)
Channel				55340	55830	56150	56640		
Frequency (MHz)				3560	3609	3641	3690		
20	QPSK	1	0	22.66	22.71	22.25	22.22	23.8	0
20	QPSK	1	49	22.90	22.93	22.68	22.46		
20	QPSK	1	99	22.75	22.59	22.57	22.30		
20	QPSK	50	0	21.89	21.92	21.69	21.51	22.8	1
20	QPSK	50	24	22.02	22.04	21.81	21.59		
20	QPSK	50	50	21.87	21.75	21.72	21.44		
20	QPSK	100	0	21.89	21.92	21.77	21.52		
20	16QAM	1	0	21.81	21.65	21.49	21.32	22.8	1
20	16QAM	1	49	22.04	21.74	21.74	21.59		
20	16QAM	1	99	21.96	21.73	21.67	21.35		
20	16QAM	50	0	21.04	20.88	20.72	20.52	21.8	2
20	16QAM	50	24	21.14	20.98	20.84	20.62		
20	16QAM	50	50	21.00	20.75	20.74	20.45		
20	16QAM	100	0	21.07	20.81	20.79	20.52		
20	64QAM	1	0	20.22	20.66	20.27	20.25	21.8	2
20	64QAM	1	49	20.40	20.87	20.72	20.00		
20	64QAM	1	99	20.42	20.50	20.54	20.05		
20	64QAM	50	0	19.54	19.36	19.34	19.23	20.8	3
20	64QAM	50	24	19.68	19.44	19.49	19.30		
20	64QAM	50	50	19.63	19.36	19.42	19.36		
20	64QAM	100	0	19.55	19.30	19.36	19.17		
20	256QAM	1	0	17.66	17.71	17.25	17.29	18.8	2
20	256QAM	1	49	17.90	17.93	17.67	17.46		
20	256QAM	1	99	17.75	17.59	17.57	17.30		
20	256QAM	50	0	17.89	17.92	17.69	17.51	18.8	3
20	256QAM	50	24	18.00	17.96	17.81	17.59		
20	256QAM	50	50	17.87	17.75	17.72	17.44		
20	256QAM	100	0	17.89	17.92	17.76	17.52		
Channel				55315	55820	56160	56665	Tune-up limit (dBm)	MPR (dB)
Frequency (MHz)				3557.5	3608	3642	3692.5		
15	QPSK	1	0	22.55	22.80	22.45	22.22	23.8	0
15	QPSK	1	37	22.74	22.87	22.73	22.42		
15	QPSK	1	74	22.88	22.67	22.70	22.34		
15	QPSK	36	0	21.86	21.96	21.75	21.46	22.8	1
15	QPSK	36	20	21.90	21.89	21.87	21.53		
15	QPSK	36	39	21.93	21.81	21.69	21.40		
15	QPSK	75	0	21.86	21.86	21.77	21.43		
15	16QAM	1	0	22.02	21.65	21.57	21.48	22.8	1
15	16QAM	1	37	21.96	21.71	21.60	21.56		
15	16QAM	1	74	22.19	21.70	21.79	21.52		
15	16QAM	36	0	21.02	20.90	20.69	20.49	21.8	2
15	16QAM	36	20	21.06	20.86	20.76	20.59		
15	16QAM	36	39	21.04	20.76	20.65	20.46		
15	16QAM	75	0	21.10	20.84	20.78	20.56		
15	64QAM	1	0	20.59	20.42	20.31	20.35	21.8	2
15	64QAM	1	37	20.51	20.25	20.20	20.48		
15	64QAM	1	74	20.76	20.43	20.41	20.34		
15	64QAM	36	0	19.74	19.56	19.37	19.15	20.8	3
15	64QAM	36	20	19.78	19.46	19.42	19.18		
15	64QAM	36	39	19.85	19.53	19.39	19.20		
15	64QAM	75	0	19.77	19.47	19.32	19.16		

15	256QAM	1	0	17.57	17.63	17.18	17.28	18.8	2
15	256QAM	1	37	17.85	17.86	17.63	17.36		
15	256QAM	1	74	17.72	17.59	17.54	17.22		
15	256QAM	36	0	17.86	17.83	17.59	17.45	18.8	3
15	256QAM	36	20	17.98	17.94	17.73	17.51		
15	256QAM	36	39	17.87	17.70	17.65	17.38		
15	256QAM	75	0	17.82	17.87	17.76	17.44		
Channel				55290	55815	56165	56690	Tune-up limit (dBm)	MPR (dB)
Frequency (MHz)				3555	3607.5	3642.5	3695		
10	QPSK	1	0	22.60	22.41	22.24	22.02	23.8	0
10	QPSK	1	25	22.91	22.70	22.61	22.35		
10	QPSK	1	49	22.77	22.59	22.48	22.25		
10	QPSK	25	0	21.84	21.67	21.49	21.26	22.8	1
10	QPSK	25	12	22.03	21.71	21.63	21.44		
10	QPSK	25	25	21.92	21.68	21.50	21.31		
10	QPSK	50	0	21.90	21.64	21.57	21.34		
10	16QAM	1	0	21.73	21.61	21.37	21.10	22.8	1
10	16QAM	1	25	22.08	21.86	21.69	21.49		
10	16QAM	1	49	21.95	21.72	21.57	21.39		
10	16QAM	25	0	20.84	20.64	20.49	20.22	21.8	2
10	16QAM	25	12	21.02	20.70	20.63	20.43		
10	16QAM	25	25	20.88	20.65	20.49	20.32		
10	16QAM	50	0	20.96	20.66	20.57	20.37		
10	64QAM	1	0	20.59	20.32	20.20	19.98	21.8	2
10	64QAM	1	25	20.88	20.66	20.34	20.31		
10	64QAM	1	49	20.72	20.39	20.38	20.06		
10	64QAM	25	0	19.63	19.47	19.26	19.21	20.8	3
10	64QAM	25	12	19.73	19.41	19.40	19.19		
10	64QAM	25	25	19.68	19.34	19.41	19.23		
10	64QAM	50	0	19.62	19.48	19.40	19.18		
10	256QAM	1	0	17.49	17.54	17.15	17.22	18.8	2
10	256QAM	1	25	17.78	17.85	17.62	17.31		
10	256QAM	1	49	17.72	17.50	17.44	17.14		
10	256QAM	25	0	17.80	17.78	17.52	17.35	18.8	3
10	256QAM	25	12	17.90	17.90	17.71	17.45		
10	256QAM	25	25	17.80	17.63	17.56	17.33		
10	256QAM	50	0	17.74	17.83	17.68	17.39		
Channel				55265	55810	56170	56715	Tune-up limit (dBm)	MPR (dB)
Frequency (MHz)				3552.5	3607	3643	3697.5		
5	QPSK	1	0	22.78	22.57	22.41	22.24	23.8	0
5	QPSK	1	12	22.90	22.74	22.63	22.37		
5	QPSK	1	24	22.89	22.66	22.51	22.36		
5	QPSK	12	0	21.96	21.68	21.58	21.34	22.8	1
5	QPSK	12	7	21.95	21.72	21.65	21.45		
5	QPSK	12	13	21.96	21.70	21.71	21.40		
5	QPSK	25	0	21.90	21.72	21.60	21.39		
5	16QAM	1	0	21.87	21.65	21.53	21.29	22.8	1
5	16QAM	1	12	21.93	21.72	21.61	21.37		
5	16QAM	1	24	21.90	21.71	21.55	21.40		
5	16QAM	12	0	20.89	20.63	20.51	20.23	21.8	2
5	16QAM	12	7	20.88	20.77	20.58	20.37		
5	16QAM	12	13	20.95	20.68	20.55	20.33		
5	16QAM	25	0	20.98	20.83	20.64	20.46		
5	64QAM	1	0	20.42	20.47	20.38	20.16	21.8	2
5	64QAM	1	12	20.47	20.49	20.45	20.21		
5	64QAM	1	24	20.49	20.54	20.45	20.28		

5	64QAM	12	0	19.54	19.29	19.29	19.05	20.8	3
5	64QAM	12	7	19.59	19.39	19.42	19.11		
5	64QAM	12	13	19.57	19.33	19.41	19.10		
5	64QAM	25	0	19.58	19.42	19.46	19.24		
5	256QAM	1	0	17.44	17.44	17.06	17.17	18.8	2
5	256QAM	1	12	17.73	17.79	17.57	17.25		
5	256QAM	1	24	17.68	17.50	17.44	17.13		
5	256QAM	12	0	17.77	17.69	17.49	17.27	18.8	3
5	256QAM	12	7	17.84	17.81	17.69	17.42		
5	256QAM	12	13	17.79	17.60	17.53	17.23		
5	256QAM	25	0	17.65	17.79	17.66	17.35		

LAT Full Power Mode

<LTE Band 38>

BW [MHz]	Modulation	RB Size	RB Offset	Power Low Ch. / Freq.	Power Middle Ch. / Freq.	Power High Ch. / Freq.	Tune-up limit (dBm)	MPR (dB)
Channel				37850	38000	38150		
Frequency (MHz)				2580	2595	2610		
20	QPSK	1	0	23.37	23.37	23.32	23.8	0
20	QPSK	1	49	23.43	23.41	23.36		
20	QPSK	1	99	23.46	23.36	23.32		
20	QPSK	50	0	22.35	22.34	22.38	22.8	1
20	QPSK	50	24	22.57	22.53	22.48		
20	QPSK	50	50	22.49	22.46	22.41		
20	QPSK	100	0	22.47	22.38	22.39		
20	16QAM	1	0	22.40	22.51	22.55	22.8	1
20	16QAM	1	49	22.55	22.46	22.36		
20	16QAM	1	99	22.69	22.55	22.49		
20	16QAM	50	0	21.33	21.50	21.30	21.8	2
20	16QAM	50	24	21.59	21.61	21.25		
20	16QAM	50	50	21.51	21.44	21.32		
20	16QAM	100	0	21.43	21.42	21.36		
20	64QAM	1	0	21.11	21.06	21.08	21.8	2
20	64QAM	1	49	21.25	21.11	21.10		
20	64QAM	1	99	21.41	21.00	20.98		
20	64QAM	50	0	20.10	19.99	19.99	20.8	3
20	64QAM	50	24	20.22	20.06	20.06		
20	64QAM	50	50	20.17	20.05	19.97		
20	64QAM	100	0	20.20	20.04	20.01		
20	256QAM	1	0	18.37	18.39	18.32	18.8	2
20	256QAM	1	49	18.43	18.41	18.36		
20	256QAM	1	99	18.45	18.36	18.35		
20	256QAM	50	0	18.35	18.34	18.38	18.8	3
20	256QAM	50	24	18.51	18.49	18.47		
20	256QAM	50	50	18.49	18.46	18.41		
20	256QAM	100	0	18.47	18.40	18.40		
Channel				37825	38000	38175	Tune-up limit (dBm)	MPR (dB)
Frequency (MHz)				2577.5	2595	2612.5		
15	QPSK	1	0	23.37	23.38	23.31	23.8	0
15	QPSK	1	37	23.27	23.45	23.40		
15	QPSK	1	74	23.45	23.40	23.28		
15	QPSK	36	0	22.36	22.48	22.30	22.8	1
15	QPSK	36	12	22.51	22.51	22.47		
15	QPSK	36	25	22.48	22.49	22.38		
15	QPSK	75	0	22.40	22.49	22.40		
15	16QAM	1	0	22.49	22.51	22.60	22.8	1
15	16QAM	1	37	22.43	22.42	22.55		
15	16QAM	1	74	22.64	22.47	22.43		
15	16QAM	36	0	21.23	21.43	21.30	21.8	2
15	16QAM	36	20	21.50	21.46	21.40		
15	16QAM	36	39	21.42	21.42	21.29		
15	16QAM	75	0	21.47	21.46	21.33		
15	64QAM	1	0	21.17	21.07	21.12	21.8	2
15	64QAM	1	37	21.34	21.07	21.08		
15	64QAM	1	74	21.33	20.94	20.88		
15	64QAM	36	0	20.15	20.10	19.97	20.8	3
15	64QAM	36	20	20.30	20.08	19.99		
15	64QAM	36	39	20.20	20.03	20.01		

15	64QAM	75	0	20.16	20.02	20.03		
15	256QAM	1	0	18.32	18.31	18.30	18.8	2
15	256QAM	1	37	18.41	18.40	18.31		
15	256QAM	1	74	18.43	18.29	18.32		
15	256QAM	36	0	18.27	18.27	18.36	18.8	3
15	256QAM	36	20	18.51	18.46	18.42		
15	256QAM	36	39	18.43	18.39	18.31		
15	256QAM	75	0	18.44	18.37	18.39		
Channel				37800	38000	38200	Tune-up limit (dBm)	MPR (dB)
Frequency (MHz)				2575	2595	2615		
10	QPSK	1	0	22.90	23.09	22.93	23.8	0
10	QPSK	1	25	23.17	23.21	23.37		
10	QPSK	1	49	22.95	22.99	22.95		
10	QPSK	25	0	22.15	22.19	22.21	22.8	1
10	QPSK	25	12	22.09	22.14	22.21		
10	QPSK	25	25	22.18	22.28	22.41		
10	QPSK	50	0	22.17	22.18	22.09		
10	16QAM	1	0	22.02	22.11	22.27	22.8	1
10	16QAM	1	25	22.34	22.39	22.51		
10	16QAM	1	49	22.13	22.37	22.18		
10	16QAM	25	0	21.12	21.31	21.12	21.8	2
10	16QAM	25	12	21.29	21.43	21.23		
10	16QAM	25	25	21.31	21.36	21.52		
10	16QAM	50	0	21.12	21.17	21.15		
10	64QAM	1	0	20.79	20.93	20.91	21.8	2
10	64QAM	1	25	21.08	21.19	20.85		
10	64QAM	1	49	20.87	20.99	20.92		
10	64QAM	25	0	19.93	19.82	19.79	20.8	3
10	64QAM	25	12	20.12	19.96	19.90		
10	64QAM	25	25	20.11	19.83	19.82		
10	64QAM	50	0	20.00	19.80	19.75		
10	256QAM	1	0	18.27	18.24	18.28	18.8	2
10	256QAM	1	25	18.31	18.35	18.26		
10	256QAM	1	49	18.37	18.27	18.22		
10	256QAM	25	0	18.23	18.18	18.26	18.8	3
10	256QAM	25	12	18.48	18.36	18.40		
10	256QAM	25	25	18.38	18.33	18.26		
10	256QAM	50	0	18.39	18.34	18.37		
Channel				37775	38000	38225	Tune-up limit (dBm)	MPR (dB)
Frequency (MHz)				2572.5	2595	2617.5		
5	QPSK	1	0	23.02	23.20	22.96	23.8	0
5	QPSK	1	12	23.13	23.22	23.04		
5	QPSK	1	24	23.08	23.15	23.03		
5	QPSK	12	0	22.07	22.26	22.13	22.8	1
5	QPSK	12	7	22.16	22.31	22.16		
5	QPSK	12	13	22.28	22.23	22.15		
5	QPSK	25	0	22.25	22.32	22.14		
5	16QAM	1	0	22.13	22.27	22.21	22.8	1
5	16QAM	1	12	22.21	22.32	22.20		
5	16QAM	1	24	22.31	22.33	22.23		
5	16QAM	12	0	21.06	21.16	21.10	21.8	2
5	16QAM	12	7	21.24	21.30	21.17		
5	16QAM	12	13	21.21	21.22	21.15		
5	16QAM	25	0	21.18	21.33	21.16		
5	64QAM	1	0	20.94	20.86	20.76	21.8	2
5	64QAM	1	12	21.16	20.96	20.89		

5	64QAM	1	24	21.05	20.93	20.82		
5	64QAM	12	0	19.96	19.84	19.89	20.8	3
5	64QAM	12	7	20.15	19.95	19.93		
5	64QAM	12	13	20.05	19.87	19.91		
5	64QAM	25	0	20.09	19.86	19.85		
5	256QAM	1	0	18.19	18.23	18.20	18.8	2
5	256QAM	1	12	18.27	18.26	18.21		
5	256QAM	1	24	18.30	18.20	18.13		
5	256QAM	12	0	18.20	18.09	18.18	18.8	3
5	256QAM	12	7	18.39	18.34	18.34		
5	256QAM	12	13	18.30	18.27	18.18		
5	256QAM	25	0	18.39	18.24	18.31		

<LTE Band 41 PC3>

BW [MHz]	Modulation	RB Size	RB Offset	Power Low Ch. / Freq.	Power Low Middle Ch. / Freq.	Power Middle Ch. / Freq.	Power High Middle Ch. / Freq.	Power High Ch. / Freq.	Tune-up limit (dBm)	MPR (dB)
Channel				39750	40185	40620	41055	41490		
Frequency (MHz)				2506	2549.5	2593	2636.5	2680		
20	QPSK	1	0	23.58	23.52	23.14	23.14	22.86	23.8	0
20	QPSK	1	49	23.58	23.57	23.60	23.45	23.30		
20	QPSK	1	99	23.48	23.56	23.23	23.04	23.20		
20	QPSK	50	0	22.68	22.59	22.41	22.36	22.16	22.8	1
20	QPSK	50	24	22.62	22.58	22.65	22.44	22.37		
20	QPSK	50	50	22.63	22.55	22.64	22.36	22.40		
20	QPSK	100	0	22.53	22.49	22.55	22.42	22.31		
20	16QAM	1	0	22.72	22.67	22.29	22.22	22.04	22.8	1
20	16QAM	1	49	22.69	22.66	22.62	22.55	22.41		
20	16QAM	1	99	22.73	22.64	22.36	22.11	22.25		
20	16QAM	50	0	21.70	21.59	21.44	21.41	21.21	21.8	2
20	16QAM	50	24	21.76	21.70	21.55	21.47	21.45		
20	16QAM	50	50	21.73	21.66	21.55	21.39	21.42		
20	16QAM	100	0	21.65	21.58	21.44	21.43	21.34		
20	64QAM	1	0	21.12	21.13	20.57	20.65	20.51	21.8	2
20	64QAM	1	49	20.98	21.19	20.98	21.00	20.88		
20	64QAM	1	99	21.02	21.19	20.67	20.59	20.66		
20	64QAM	50	0	20.29	20.36	20.07	20.09	19.95	20.8	3
20	64QAM	50	24	20.32	20.45	20.18	20.15	20.18		
20	64QAM	50	50	20.27	20.44	20.18	20.07	20.15		
20	64QAM	100	0	20.24	20.35	20.09	20.11	20.10		
20	256QAM	1	0	18.48	18.42	18.04	18.04	17.76	18.8	2
20	256QAM	1	49	18.48	18.47	18.49	18.35	18.20		
20	256QAM	1	99	18.38	18.46	18.13	17.94	18.10		
20	256QAM	50	0	18.48	18.39	18.21	18.16	17.96	18.8	3
20	256QAM	50	24	18.42	18.38	18.45	18.24	18.17		
20	256QAM	50	50	18.43	18.35	18.44	18.16	18.20		
20	256QAM	100	0	18.33	18.29	18.35	18.22	18.11		
Channel				39725	40173	40620	41068	41515	Tune-up limit (dBm)	MPR (dB)
Frequency (MHz)				2503.5	2548.3	2593	2637.8	2682.5		
15	QPSK	1	0	23.56	23.33	23.25	23.25	23.02	23.8	0
15	QPSK	1	37	23.58	23.56	23.51	23.38	23.29		
15	QPSK	1	74	23.58	23.30	23.38	23.22	23.22		
15	QPSK	36	0	22.70	22.56	22.43	22.39	22.20	22.8	1
15	QPSK	36	20	22.71	22.68	22.55	22.51	22.31		
15	QPSK	36	39	22.69	22.62	22.56	22.41	22.38		
15	QPSK	75	0	22.67	22.62	22.46	22.44	22.25		
15	16QAM	1	0	22.74	22.47	22.41	22.38	22.15	22.8	1
15	16QAM	1	37	22.69	22.69	22.62	22.55	22.38		
15	16QAM	1	74	22.73	22.49	22.49	22.31	22.37		
15	16QAM	36	0	21.68	21.49	21.39	21.34	21.16	21.8	2
15	16QAM	36	20	21.69	21.67	21.49	21.47	21.27		
15	16QAM	36	39	21.68	21.59	21.54	21.38	21.36		
15	16QAM	75	0	21.69	21.66	21.47	21.46	21.28		
15	64QAM	1	0	20.88	20.93	20.75	20.81	20.63	21.8	2
15	64QAM	1	37	21.03	21.17	20.99	20.97	20.87		
15	64QAM	1	74	20.97	20.97	20.82	20.77	20.75		
15	64QAM	36	0	20.26	20.31	20.09	20.09	19.95	20.8	3
15	64QAM	36	20	20.26	20.45	20.18	20.19	20.06		
15	64QAM	36	39	20.26	20.36	20.19	20.10	20.09		
15	64QAM	75	0	20.23	20.37	20.12	20.15	19.99		

15	256QAM	1	0	18.41	18.33	18.00	17.99	17.75	18.8	2
15	256QAM	1	37	18.43	18.37	18.48	18.29	18.10		
15	256QAM	1	74	18.37	18.42	18.04	17.94	18.03		
15	256QAM	36	0	18.46	18.38	18.11	18.09	17.94	18.8	3
15	256QAM	36	20	18.37	18.31	18.40	18.18	18.13		
15	256QAM	36	39	18.37	18.30	18.42	18.12	18.13		
15	256QAM	75	0	18.33	18.27	18.26	18.21	18.04		
Channel				39700	40160	40620	41080	41540	Tune-up limit (dBm)	MPR (dB)
Frequency (MHz)				2501	2547	2593	2639	2685		
10	QPSK	1	0	23.46	23.29	23.01	22.86	22.82	23.8	0
10	QPSK	1	25	23.57	23.41	23.30	23.17	23.08		
10	QPSK	1	49	23.59	23.11	23.01	22.88	22.81		
10	QPSK	25	0	22.55	22.38	22.29	22.18	22.14	22.8	1
10	QPSK	25	12	22.63	22.55	22.37	22.22	22.25		
10	QPSK	25	25	22.68	22.45	22.42	22.19	22.25		
10	QPSK	50	0	22.56	22.46	22.28	22.10	22.09		
10	16QAM	1	0	22.55	22.37	22.30	22.18	22.02	22.8	1
10	16QAM	1	25	22.56	22.58	22.43	22.34	22.24		
10	16QAM	1	49	22.57	22.30	22.20	22.07	21.96		
10	16QAM	25	0	21.63	21.42	21.33	21.17	21.11	21.8	2
10	16QAM	25	12	21.68	21.57	21.41	21.25	21.22		
10	16QAM	25	25	21.74	21.48	21.45	21.23	21.24		
10	16QAM	50	0	21.59	21.49	21.30	21.17	21.20		
10	64QAM	1	0	20.79	20.88	20.65	20.56	20.46	21.8	2
10	64QAM	1	25	20.93	21.10	20.82	20.81	20.66		
10	64QAM	1	49	20.72	20.75	20.41	20.52	20.27		
10	64QAM	25	0	20.15	20.19	19.96	19.89	19.81	20.8	3
10	64QAM	25	12	20.24	20.35	20.07	19.97	19.98		
10	64QAM	25	25	20.19	20.25	20.09	19.93	19.92		
10	64QAM	50	0	20.13	20.22	19.96	19.85	19.81		
10	256QAM	1	0	18.36	18.26	17.93	17.99	17.69	18.8	2
10	256QAM	1	25	18.38	18.33	18.41	18.22	18.00		
10	256QAM	1	49	18.31	18.35	18.02	17.87	18.00		
10	256QAM	25	0	18.40	18.30	18.04	18.08	17.89	18.8	3
10	256QAM	25	12	18.31	18.27	18.39	18.12	18.11		
10	256QAM	25	25	18.31	18.29	18.37	18.11	18.05		
10	256QAM	50	0	18.24	18.24	18.22	18.20	18.03		
Channel				39675	40148	40620	41093	41565	Tune-up limit (dBm)	MPR (dB)
Frequency (MHz)				2498.5	2545.8	2593	2640.30	2687.5		
5	QPSK	1	0	23.51	23.40	23.23	23.20	23.12	23.8	0
5	QPSK	1	12	23.46	23.41	23.31	23.21	23.14		
5	QPSK	1	24	23.48	23.43	23.24	23.19	23.12		
5	QPSK	12	0	22.53	22.51	22.35	22.22	22.21	22.8	1
5	QPSK	12	7	22.54	22.56	22.45	22.34	22.22		
5	QPSK	12	13	22.53	22.55	22.43	22.31	22.20		
5	QPSK	25	0	22.51	22.53	22.34	22.31	22.21		
5	16QAM	1	0	22.62	22.53	22.41	22.30	22.27	22.8	1
5	16QAM	1	12	22.68	22.70	22.50	22.43	22.33		
5	16QAM	1	24	22.63	22.58	22.42	22.35	22.22		
5	16QAM	12	0	21.53	21.52	21.34	21.28	21.17	21.8	2
5	16QAM	12	7	21.54	21.58	21.39	21.33	21.20		
5	16QAM	12	13	21.51	21.52	21.37	21.30	21.15		
5	16QAM	25	0	21.56	21.55	21.41	21.32	21.22		
5	64QAM	1	0	20.94	21.06	21.06	20.74	20.63	21.8	2
5	64QAM	1	12	20.92	21.11	21.11	20.82	20.63		
5	64QAM	1	24	20.91	21.06	21.06	20.80	20.56		

5	64QAM	12	0	20.06	20.32	20.32	19.95	19.87	20.8	3
5	64QAM	12	7	20.11	20.36	20.36	20.04	19.93		
5	64QAM	12	13	20.09	20.34	20.34	19.99	19.89		
5	64QAM	25	0	20.11	20.33	20.33	20.04	19.90		
5	256QAM	1	0	18.33	18.26	17.84	17.93	17.61	18.8	2
5	256QAM	1	12	18.33	18.33	18.35	18.22	17.99		
5	256QAM	1	24	18.24	18.34	17.95	17.85	17.99		
5	256QAM	12	0	18.31	18.23	17.99	18.01	17.86	18.8	3
5	256QAM	12	7	18.30	18.18	18.30	18.02	18.04		
5	256QAM	12	13	18.28	18.26	18.33	18.05	18.02		
5	256QAM	25	0	18.16	18.15	18.15	18.10	17.97		

<LTE Band 41_PC2>

BW [MHz]	Modulation	RB Size	RB Offset	Power Low Ch. / Freq.	Power Low Middle Ch. / Freq.	Power Middle Ch. / Freq.	Power High Middle Ch. / Freq.	Power High Ch. / Freq.	Tune-up limit (dBm)	MPR (dB)
Channel				39750	40185	40620	41055	41490		
Frequency (MHz)				2506	2549.5	2593	2636.5	2680		
20	QPSK	1	0	25.64	25.57	25.23	25.35	25.18	26.3	0
20	QPSK	1	49	25.65	25.59	25.72	25.66	25.56		
20	QPSK	1	99	25.68	25.62	25.62	25.27	25.31		
20	QPSK	50	0	24.84	24.68	24.68	24.71	24.56	25.3	1
20	QPSK	50	24	24.86	24.79	24.89	24.78	24.72		
20	QPSK	50	50	24.82	24.79	24.85	24.74	24.73		
20	QPSK	100	0	24.74	24.68	24.76	24.70	24.58		
20	16QAM	1	0	25.02	24.95	24.63	24.74	24.54	25.3	1
20	16QAM	1	49	25.03	24.96	25.02	24.97	24.95		
20	16QAM	1	99	24.97	24.97	24.92	24.56	24.71		
20	16QAM	50	0	23.86	23.75	23.69	23.74	23.60	24.3	2
20	16QAM	50	24	23.90	23.84	23.88	23.81	23.72		
20	16QAM	50	50	23.84	23.80	23.93	23.76	23.76		
20	16QAM	100	0	23.79	23.75	23.79	23.70	23.64		
20	64QAM	1	0	23.27	23.52	23.19	23.20	22.98	24.3	2
20	64QAM	1	49	23.42	23.61	23.65	23.46	23.45		
20	64QAM	1	99	23.45	23.61	23.53	22.96	23.13		
20	64QAM	50	0	22.44	22.49	22.46	22.42	22.23	23.3	3
20	64QAM	50	24	22.46	22.60	22.62	22.50	22.38		
20	64QAM	50	50	22.43	22.55	22.69	22.44	22.40		
20	64QAM	100	0	22.40	22.49	22.53	22.37	22.27		
20	256QAM	1	0	20.53	20.46	20.12	20.24	20.07	21.3	2
20	256QAM	1	49	20.54	20.48	20.58	20.55	20.45		
20	256QAM	1	99	20.57	20.51	20.51	20.16	20.20		
20	256QAM	50	0	20.57	20.46	20.46	20.49	20.34	21.3	3
20	256QAM	50	24	20.60	20.57	20.61	20.56	20.50		
20	256QAM	50	50	20.60	20.57	20.59	20.52	20.51		
20	256QAM	100	0	20.52	20.46	20.54	20.48	20.36		
Channel				39725	40173	40620	41068	41515	Tune-up limit (dBm)	MPR (dB)
Frequency (MHz)				2503.5	2548.3	2593	2637.8	2682.5		
15	QPSK	1	0	25.62	25.44	25.38	25.54	25.45	26.3	0
15	QPSK	1	37	25.63	25.69	25.64	25.71	25.65		
15	QPSK	1	74	25.63	25.43	25.53	25.51	25.65		
15	QPSK	36	0	24.83	24.67	24.63	24.74	24.73	25.3	1
15	QPSK	36	20	24.86	24.82	24.79	24.87	24.84		
15	QPSK	36	39	24.85	24.72	24.74	24.75	24.92		
15	QPSK	75	0	24.80	24.74	24.62	24.81	24.80		
15	16QAM	1	0	25.01	24.80	24.72	24.84	24.82	25.3	1
15	16QAM	1	37	24.98	24.98	24.90	24.96	25.05		
15	16QAM	1	74	25.03	24.82	24.83	24.75	25.05		
15	16QAM	36	0	23.84	23.64	23.59	23.71	23.73	24.3	2
15	16QAM	36	20	23.86	23.78	23.78	23.85	23.84		
15	16QAM	36	39	23.81	23.72	23.76	23.77	23.92		
15	16QAM	75	0	23.82	23.74	23.67	23.81	23.80		
15	64QAM	1	0	23.18	23.33	23.12	23.36	23.33	24.3	2
15	64QAM	1	37	23.46	23.62	23.44	23.38	23.65		
15	64QAM	1	74	23.42	23.35	23.33	23.16	23.61		
15	64QAM	36	0	22.43	22.44	22.25	22.42	22.48	23.3	3
15	64QAM	36	20	22.43	22.58	22.43	22.56	22.58		
15	64QAM	36	39	22.43	22.52	22.41	22.41	22.64		
15	64QAM	75	0	22.39	22.54	22.31	22.49	22.53		

15	256QAM	1	0	20.48	20.37	20.07	20.16	20.02	21.3	2
15	256QAM	1	37	20.47	20.39	20.57	20.45	20.43		
15	256QAM	1	74	20.50	20.43	20.49	20.12	20.20		
15	256QAM	36	0	20.53	20.43	20.37	20.46	20.33	21.3	3
15	256QAM	36	20	20.52	20.57	20.59	20.54	20.50		
15	256QAM	36	39	20.54	20.51	20.51	20.48	20.45		
15	256QAM	75	0	20.44	20.36	20.45	20.39	20.29		
Channel				39700	40160	40620	41080	41540	Tune-up limit (dBm)	MPR (dB)
Frequency (MHz)				2501	2547	2593	2639	2685		
10	QPSK	1	0	25.50	25.16	25.09	25.22	25.27	26.3	0
10	QPSK	1	25	25.45	25.41	25.37	25.45	25.50		
10	QPSK	1	49	25.47	25.26	25.20	25.21	25.34		
10	QPSK	25	0	24.66	24.49	24.43	24.53	24.60	25.3	1
10	QPSK	25	12	24.69	24.64	24.54	24.71	24.80		
10	QPSK	25	25	24.65	24.56	24.52	24.60	24.65		
10	QPSK	50	0	24.60	24.56	24.46	24.62	24.60		
10	16QAM	1	0	24.87	24.58	24.46	24.61	24.69	25.3	1
10	16QAM	1	25	24.89	24.78	24.73	24.85	24.90		
10	16QAM	1	49	24.87	24.57	24.54	24.62	24.64		
10	16QAM	25	0	23.69	23.49	23.44	23.53	23.60	24.3	2
10	16QAM	25	12	23.72	23.70	23.55	23.74	23.79		
10	16QAM	25	25	23.69	23.57	23.51	23.66	23.69		
10	16QAM	50	0	23.64	23.60	23.47	23.63	23.64		
10	64QAM	1	0	23.12	23.16	22.94	23.10	23.18	24.3	2
10	64QAM	1	25	23.30	23.53	23.37	23.43	23.56		
10	64QAM	1	49	23.29	23.21	23.07	23.18	23.21		
10	64QAM	25	0	22.30	22.36	22.17	22.28	22.39	23.3	3
10	64QAM	25	12	22.29	22.54	22.29	22.45	22.53		
10	64QAM	25	25	22.29	22.41	22.23	22.34	22.43		
10	64QAM	50	0	22.16	22.40	22.12	22.31	22.35		
10	256QAM	1	0	20.40	20.27	20.03	20.07	20.01	21.3	2
10	256QAM	1	25	20.38	20.29	20.47	20.38	20.43		
10	256QAM	1	49	20.49	20.40	20.42	20.12	20.12		
10	256QAM	25	0	20.50	20.41	20.28	20.46	20.30	21.3	3
10	256QAM	25	12	20.47	20.48	20.57	20.47	20.49		
10	256QAM	25	25	20.44	20.47	20.51	20.44	20.43		
10	256QAM	50	0	20.37	20.33	20.35	20.29	20.28		
Channel				39675	40148	40620	41093	41565	Tune-up limit (dBm)	MPR (dB)
Frequency (MHz)				2498.5	2545.8	2593	2640.30	2687.5		
5	QPSK	1	0	25.51	25.41	25.36	25.44	25.56	26.3	0
5	QPSK	1	12	25.45	25.45	25.37	25.52	25.49		
5	QPSK	1	24	25.50	25.44	25.36	25.47	25.48		
5	QPSK	12	0	24.66	24.65	24.53	24.64	24.73	25.3	1
5	QPSK	12	7	24.72	24.70	24.62	24.70	24.74		
5	QPSK	12	13	24.67	24.67	24.57	24.67	24.72		
5	QPSK	25	0	24.64	24.63	24.49	24.63	24.71		
5	16QAM	1	0	24.81	24.74	24.70	24.75	24.89	25.3	1
5	16QAM	1	12	24.82	24.77	24.74	24.80	24.89		
5	16QAM	1	24	24.86	24.81	24.72	24.79	24.87		
5	16QAM	12	0	23.72	23.67	23.54	23.65	23.80	24.3	2
5	16QAM	12	7	23.76	23.72	23.64	23.73	23.81		
5	16QAM	12	13	23.73	23.69	23.60	23.68	23.75		
5	16QAM	25	0	23.70	23.70	23.54	23.72	23.77		
5	64QAM	1	0	23.10	23.38	23.22	23.30	23.43	24.3	2
5	64QAM	1	12	23.25	23.45	23.25	23.36	23.44		
5	64QAM	1	24	23.28	23.43	23.28	23.37	23.40		

5	64QAM	12	0	22.26	22.44	22.25	22.32	22.49	23.3	3
5	64QAM	12	7	22.29	22.50	22.33	22.42	22.50		
5	64QAM	12	13	22.25	22.49	22.28	22.40	22.49		
5	64QAM	25	0	22.29	22.46	22.24	22.39	22.49		
5	256QAM	1	0	20.33	20.26	19.97	20.03	19.91	21.3	2
5	256QAM	1	12	20.33	20.19	20.41	20.35	20.33		
5	256QAM	1	24	20.43	20.38	20.41	20.04	20.04		
5	256QAM	12	0	20.48	20.34	20.26	20.38	20.27	21.3	3
5	256QAM	12	7	20.44	20.43	20.54	20.46	20.39		
5	256QAM	12	13	20.36	20.45	20.45	20.34	20.34		
5	256QAM	25	0	20.30	20.32	20.33	20.27	20.23		

UAT Reduced Power Mode for Next-to-Head

<LTE Band 38>

BW [MHz]	Modulation	RB Size	RB Offset	Power Low Ch. / Freq.	Power Middle Ch. / Freq.	Power High Ch. / Freq.	Tune-up limit (dBm)	MPR (dB)
Channel				37850	38000	38150		
Frequency (MHz)				2580	2595	2610		
20	QPSK	1	0	16.65	16.71	16.75	17.3	0
20	QPSK	1	49	16.98	16.92	16.97		
20	QPSK	1	99	16.92	16.91	16.90		
20	QPSK	50	0	16.76	16.74	16.94	17.3	0
20	QPSK	50	24	16.93	16.92	16.91		
20	QPSK	50	50	16.92	16.90	16.90		
20	QPSK	100	0	16.79	16.88	16.93		
20	16QAM	1	0	16.90	16.97	16.96	17.3	0
20	16QAM	1	49	16.93	16.95	16.96		
20	16QAM	1	99	16.91	16.93	16.97		
20	16QAM	50	0	16.12	16.43	16.46	17.3	0
20	16QAM	50	24	16.50	16.57	16.58		
20	16QAM	50	50	16.40	16.47	16.41		
20	16QAM	100	0	16.41	16.42	16.43		
20	64QAM	1	0	16.27	16.11	16.11	17.3	0
20	64QAM	1	49	16.25	16.19	16.10		
20	64QAM	1	99	16.34	16.16	16.08		
20	64QAM	50	0	16.02	16.00	16.12	17.3	0
20	64QAM	50	24	16.25	16.12	16.20		
20	64QAM	50	50	16.22	16.01	16.11		
20	64QAM	100	0	16.17	16.07	15.99		
20	256QAM	1	0	16.05	15.91	15.95	16.8	0
20	256QAM	1	49	16.01	16.12	16.07		
20	256QAM	1	99	16.12	16.11	16.10		
20	256QAM	50	0	16.06	15.94	16.02	16.8	0
20	256QAM	50	24	16.13	16.12	16.11		
20	256QAM	50	50	16.12	16.10	16.10		
20	256QAM	100	0	15.99	16.08	16.13		
Channel				37825	38000	38175	Tune-up limit (dBm)	MPR (dB)
Frequency (MHz)				2577.5	2595	2612.5		
15	QPSK	1	0	16.48	16.30	16.53	17.3	0
15	QPSK	1	37	16.51	16.40	16.54		
15	QPSK	1	74	16.59	16.41	16.39		
15	QPSK	36	0	16.45	16.49	16.46	17.3	0
15	QPSK	36	20	16.61	16.48	16.60		
15	QPSK	36	39	16.62	16.40	16.55		
15	QPSK	75	0	16.62	16.43	16.55		
15	16QAM	1	0	16.75	16.62	16.80	17.3	0
15	16QAM	1	37	16.86	16.71	16.74		
15	16QAM	1	74	16.96	16.68	16.73		
15	16QAM	36	0	16.50	16.44	16.53	17.3	0
15	16QAM	36	20	16.65	16.53	16.54		
15	16QAM	36	39	16.63	16.36	16.49		
15	16QAM	75	0	16.63	16.49	16.58		
15	64QAM	1	0	16.61	16.52	16.59	17.3	0
15	64QAM	1	37	16.82	16.61	16.61		
15	64QAM	1	74	16.80	16.54	16.73		
15	64QAM	36	0	16.52	16.50	16.49	17.3	0
15	64QAM	36	20	16.67	16.54	16.68		
15	64QAM	36	39	16.69	16.43	16.56		

15	64QAM	75	0	16.61	16.37	16.63		
15	256QAM	1	0	16.03	15.90	15.92	16.8	0
15	256QAM	1	37	15.97	16.04	16.03		
15	256QAM	1	74	16.09	16.06	16.02		
15	256QAM	36	0	16.03	15.84	15.99	16.8	0
15	256QAM	36	20	16.07	16.02	16.07		
15	256QAM	36	39	16.05	16.00	16.10		
15	256QAM	75	0	15.97	16.06	16.09		
Channel				37800	38000	38200	Tune-up limit (dBm)	MPR (dB)
Frequency (MHz)				2575	2595	2615		
10	QPSK	1	0	15.87	16.22	16.27	17.3	0
10	QPSK	1	25	16.21	16.17	16.18		
10	QPSK	1	49	16.02	16.16	16.24		
10	QPSK	25	0	16.24	16.09	16.33	17.3	0
10	QPSK	25	12	16.42	16.28	16.44		
10	QPSK	25	25	16.37	16.31	16.31		
10	QPSK	50	0	16.34	16.20	16.34		
10	16QAM	1	0	16.37	16.50	16.52	17.3	0
10	16QAM	1	25	16.51	16.57	16.54		
10	16QAM	1	49	16.32	16.68	16.62		
10	16QAM	25	0	16.33	16.33	16.36	17.3	0
10	16QAM	25	12	16.36	16.37	16.36		
10	16QAM	25	25	16.44	16.38	16.28		
10	16QAM	50	0	16.27	16.18	16.42		
10	64QAM	1	0	16.20	16.37	16.56	17.3	0
10	64QAM	1	25	16.54	16.37	16.44		
10	64QAM	1	49	16.34	16.53	16.59		
10	64QAM	25	0	16.35	16.24	16.40	17.3	0
10	64QAM	25	12	16.58	16.40	16.47		
10	64QAM	25	25	16.46	16.46	16.38		
10	64QAM	50	0	16.40	16.32	16.34		
10	256QAM	1	0	15.98	15.86	15.89	16.8	0
10	256QAM	1	25	15.90	16.00	15.98		
10	256QAM	1	49	16.08	16.04	15.94		
10	256QAM	25	0	15.99	15.79	15.99	16.8	0
10	256QAM	25	12	16.02	16.00	15.97		
10	256QAM	25	25	16.03	15.91	16.09		
10	256QAM	50	0	15.94	16.04	16.04		
Channel				37775	38000	38225	Tune-up limit (dBm)	MPR (dB)
Frequency (MHz)				2572.5	2595	2617.5		
5	QPSK	1	0	16.18	16.07	16.12	17.3	0
5	QPSK	1	12	16.21	16.20	16.13		
5	QPSK	1	24	16.24	16.11	16.22		
5	QPSK	12	0	16.46	16.30	16.34	17.3	0
5	QPSK	12	7	16.43	16.28	16.42		
5	QPSK	12	13	16.42	16.38	16.40		
5	QPSK	25	0	16.34	16.29	16.44		
5	16QAM	1	0	16.43	16.50	16.61	17.3	0
5	16QAM	1	12	16.56	16.51	16.54		
5	16QAM	1	24	16.68	16.47	16.62		
5	16QAM	12	0	16.39	16.28	16.45	17.3	0
5	16QAM	12	7	16.48	16.36	16.50		
5	16QAM	12	13	16.48	16.39	16.44		
5	16QAM	25	0	16.51	16.35	16.49		
5	64QAM	1	0	16.52	16.17	16.47	17.3	0
5	64QAM	1	12	16.61	16.50	16.44		

5	64QAM	1	24	16.46	16.43	16.43		
5	64QAM	12	0	16.46	16.36	16.48	17.3	0
5	64QAM	12	7	16.51	16.38	16.53		
5	64QAM	12	13	16.48	16.48	16.51		
5	64QAM	25	0	16.49	16.39	16.47		
5	256QAM	1	0	15.91	15.76	15.87	16.8	0
5	256QAM	1	12	15.81	15.90	15.89		
5	256QAM	1	24	15.98	15.99	15.93		
5	256QAM	12	0	15.90	15.70	15.92	16.8	0
5	256QAM	12	7	16.00	15.94	15.89		
5	256QAM	12	13	16.02	15.91	16.03		
5	256QAM	25	0	15.91	15.94	16.02		

<LTE Band 41_PC3>

BW [MHz]	Modulation	RB Size	RB Offset	Power Low Ch. / Freq.	Power Low Middle Ch. / Freq.	Power Middle Ch. / Freq.	Power High Middle Ch. / Freq.	Power High Ch. / Freq.	Tune-up limit (dBm)	MPR (dB)
Channel				39750	40185	40620	41055	41490		
Frequency (MHz)				2506	2549.5	2593	2636.5	2680		
20	QPSK	1	0	16.74	16.72	16.89	16.77	16.59	17.3	0
20	QPSK	1	49	16.61	16.89	17.15	17.13	17.05		
20	QPSK	1	99	16.65	16.94	16.89	16.59	16.95		
20	QPSK	50	0	16.63	16.80	17.00	17.12	17.02	17.3	0
20	QPSK	50	24	16.73	17.02	17.12	17.11	17.10		
20	QPSK	50	50	16.65	17.01	17.00	17.10	17.08		
20	QPSK	100	0	16.76	16.91	17.11	17.10	17.09		
20	16QAM	1	0	16.82	17.07	16.77	17.01	16.74	17.3	0
20	16QAM	1	49	16.78	17.03	17.03	17.11	17.02		
20	16QAM	1	99	16.73	17.06	17.04	16.87	17.00		
20	16QAM	50	0	16.25	16.38	16.61	16.62	16.47	17.3	0
20	16QAM	50	24	16.32	16.51	16.69	16.64	16.70		
20	16QAM	50	50	16.16	16.50	16.77	16.55	16.68		
20	16QAM	100	0	16.15	16.44	16.56	16.67	16.64		
20	64QAM	1	0	15.96	16.13	15.67	15.85	15.61	17.3	0
20	64QAM	1	49	15.92	16.14	16.15	16.18	16.11		
20	64QAM	1	99	16.02	16.03	15.85	15.65	16.09		
20	64QAM	50	0	16.18	16.28	16.14	16.18	16.11	17.3	0
20	64QAM	50	24	16.24	16.38	16.28	16.28	16.34		
20	64QAM	50	50	16.26	16.35	16.35	16.24	16.37		
20	64QAM	100	0	16.13	16.29	16.20	16.23	16.32		
20	256QAM	1	0	15.94	15.92	16.09	15.97	15.79	16.8	0
20	256QAM	1	49	15.81	16.09	16.35	16.33	16.25		
20	256QAM	1	99	15.85	16.14	16.09	15.79	16.15		
20	256QAM	50	0	15.83	16.00	16.20	16.32	16.22	16.8	0
20	256QAM	50	24	15.93	16.22	16.32	16.31	16.30		
20	256QAM	50	50	15.85	16.21	16.20	16.30	16.28		
20	256QAM	100	0	15.96	16.11	16.31	16.30	16.29		
Channel				39725	40173	40620	41068	41515	Tune-up limit (dBm)	MPR (dB)
Frequency (MHz)				2503.5	2548.3	2593	2637.8	2682.5		
15	QPSK	1	0	16.40	16.58	16.46	16.64	16.50	17.3	0
15	QPSK	1	37	16.41	16.72	16.68	16.72	16.61		
15	QPSK	1	74	16.47	16.54	16.48	16.56	16.74		
15	QPSK	36	0	16.54	16.62	16.58	16.73	16.61	17.3	0
15	QPSK	36	20	16.60	16.81	16.69	16.72	16.80		
15	QPSK	36	39	16.52	16.71	16.72	16.71	16.75		
15	QPSK	75	0	16.55	16.71	16.60	16.66	16.73		
15	16QAM	1	0	16.71	16.68	16.50	16.77	16.62	17.3	0
15	16QAM	1	37	16.40	16.86	16.83	16.89	16.94		
15	16QAM	1	74	16.63	16.72	16.65	16.72	16.89		
15	16QAM	36	0	16.48	16.66	16.58	16.74	16.69	17.3	0
15	16QAM	36	20	16.49	16.84	16.67	16.76	16.78		
15	16QAM	36	39	16.42	16.76	16.66	16.82	16.77		
15	16QAM	75	0	16.55	16.78	16.60	16.68	16.82		
15	64QAM	1	0	16.20	16.42	16.07	16.59	16.36	17.3	0
15	64QAM	1	37	16.34	16.72	16.52	16.73	16.66		
15	64QAM	1	74	16.36	16.46	16.31	16.46	16.60		
15	64QAM	36	0	16.52	16.79	16.67	16.70	16.72	17.3	0
15	64QAM	36	20	16.61	16.89	16.73	16.79	16.97		
15	64QAM	36	39	16.52	16.86	16.78	16.80	16.78		
15	64QAM	75	0	16.55	16.84	16.67	16.86	16.86		

15	256QAM	1	0	15.84	15.90	16.07	15.95	15.72	16.8	0
15	256QAM	1	37	15.76	16.02	16.28	16.25	16.22		
15	256QAM	1	74	15.77	16.08	16.05	15.69	16.07		
15	256QAM	36	0	15.78	15.96	16.15	16.30	16.14	16.8	0
15	256QAM	36	20	15.92	16.14	16.30	16.25	16.27		
15	256QAM	36	39	15.77	16.14	16.13	16.24	16.24		
15	256QAM	75	0	15.93	16.04	16.27	16.21	16.27		
Channel				39700	40160	40620	41080	41540	Tune-up limit (dBm)	MPR (dB)
Frequency (MHz)				2501	2547	2593	2639	2685		
10	QPSK	1	0	16.05	16.07	16.28	16.37	16.35	17.3	0
10	QPSK	1	25	16.16	16.50	16.45	16.58	16.55		
10	QPSK	1	49	16.16	16.18	16.37	16.32	16.35		
10	QPSK	25	0	16.22	16.50	16.72	16.46	16.44	17.3	0
10	QPSK	25	12	16.38	16.59	16.79	16.62	16.56		
10	QPSK	25	25	16.28	16.56	16.55	16.56	16.55		
10	QPSK	50	0	16.37	16.53	16.42	16.59	16.60		
10	16QAM	1	0	16.10	16.54	16.40	16.41	16.43	17.3	0
10	16QAM	1	25	16.29	16.70	16.56	16.59	16.57		
10	16QAM	1	49	16.25	16.46	16.41	16.44	16.31		
10	16QAM	25	0	16.27	16.42	16.41	16.45	16.50	17.3	0
10	16QAM	25	12	16.34	16.79	16.54	16.60	16.60		
10	16QAM	25	25	16.45	16.34	16.86	16.58	16.57		
10	16QAM	50	0	16.22	16.68	16.46	16.41	16.37		
10	64QAM	1	0	16.10	15.97	16.31	16.24	16.14	17.3	0
10	64QAM	1	25	16.09	16.54	16.20	16.15	16.50		
10	64QAM	1	49	15.95	16.21	16.20	16.17	16.27		
10	64QAM	25	0	16.32	16.20	16.45	16.40	16.59	17.3	0
10	64QAM	25	12	16.33	16.34	16.60	16.56	16.60		
10	64QAM	25	25	16.56	16.66	16.62	16.59	16.65		
10	64QAM	50	0	16.37	16.34	16.50	16.45	16.55		
10	256QAM	1	0	15.80	15.90	16.04	15.85	15.62	16.8	0
10	256QAM	1	25	15.70	15.96	16.28	16.21	16.21		
10	256QAM	1	49	15.67	16.01	16.04	15.65	16.06		
10	256QAM	25	0	15.73	15.91	16.15	16.23	16.09	16.8	0
10	256QAM	25	12	15.90	16.05	16.25	16.22	16.27		
10	256QAM	25	25	15.68	16.06	16.09	16.16	16.23		
10	256QAM	50	0	15.85	15.98	16.19	16.13	16.23		
Channel				39675	40148	40620	41093	41565	Tune-up limit (dBm)	MPR (dB)
Frequency (MHz)				2498.5	2545.8	2593	2640.30	2687.5		
5	QPSK	1	0	16.24	16.57	16.40	16.57	16.51	17.3	0
5	QPSK	1	12	16.15	16.62	16.46	16.47	16.44		
5	QPSK	1	24	16.18	16.53	16.41	16.50	16.38		
5	QPSK	12	0	16.26	16.50	16.53	16.57	16.50	17.3	0
5	QPSK	12	7	16.35	16.71	16.53	16.64	16.70		
5	QPSK	12	13	16.23	16.65	16.54	16.61	16.60		
5	QPSK	25	0	16.28	16.60	16.48	16.58	16.52		
5	16QAM	1	0	16.23	16.67	16.61	16.56	16.66	17.3	0
5	16QAM	1	12	16.63	16.88	16.99	16.71	16.71		
5	16QAM	1	24	16.31	16.65	16.70	16.73	16.56		
5	16QAM	12	0	16.32	16.55	16.47	16.49	16.53	17.3	0
5	16QAM	12	7	16.31	16.66	16.58	16.50	16.62		
5	16QAM	12	13	16.28	16.64	16.56	16.62	16.56		
5	16QAM	25	0	16.29	16.70	16.56	16.65	16.52		
5	64QAM	1	0	16.15	16.50	16.21	16.50	16.33	17.3	0
5	64QAM	1	12	16.19	16.61	16.24	16.61	16.43		
5	64QAM	1	24	16.19	16.57	16.30	16.55	16.40		

5	64QAM	12	0	16.27	16.66	16.63	16.69	16.59	17.3	0
5	64QAM	12	7	16.36	16.75	16.61	16.66	16.66		
5	64QAM	12	13	16.36	16.74	16.62	16.69	16.62		
5	64QAM	25	0	16.37	16.68	16.60	16.62	16.63		
5	256QAM	1	0	15.72	15.83	15.97	15.80	15.52	16.8	0
5	256QAM	1	12	15.65	15.89	16.18	16.12	16.20		
5	256QAM	1	24	15.63	15.93	16.02	15.65	16.06		
5	256QAM	12	0	15.63	15.84	16.06	16.19	16.09	16.8	0
5	256QAM	12	7	15.81	16.00	16.25	16.15	16.17		
5	256QAM	12	13	15.61	15.99	16.03	16.13	16.13		
5	256QAM	25	0	15.84	15.90	16.13	16.11	16.20		

<LTE Band 41_PC2>

BW [MHz]	Modulation	RB Size	RB Offset	Power Low Ch. / Freq.	Power Low Middle Ch. / Freq.	Power Middle Ch. / Freq.	Power High Middle Ch. / Freq.	Power High Ch. / Freq.	Tune-up limit (dBm)	MPR (dB)
Channel				39750	40185	40620	41055	41490		
Frequency (MHz)				2506	2549.5	2593	2636.5	2680		
20	QPSK	1	0	17.57	17.75	17.65	17.75	17.52	18.3	0
20	QPSK	1	49	17.51	17.86	18.16	18.05	17.98		
20	QPSK	1	99	17.55	17.87	17.79	17.61	17.98		
20	QPSK	50	0	17.71	17.82	18.02	18.06	18.02	18.3	0
20	QPSK	50	24	17.73	17.97	18.09	18.06	18.05		
20	QPSK	50	50	17.71	18.09	18.07	18.07	18.08		
20	QPSK	100	0	17.82	17.91	18.08	18.05	18.05		
20	16QAM	1	0	17.82	18.11	17.87	18.11	17.85	18.3	0
20	16QAM	1	49	17.85	18.08	18.05	18.11	18.10		
20	16QAM	1	99	17.86	18.00	18.12	17.89	18.00		
20	16QAM	50	0	17.69	17.80	18.10	18.03	17.93	18.3	0
20	16QAM	50	24	17.80	18.04	18.07	18.07	17.99		
20	16QAM	50	50	17.63	18.05	18.00	18.15	18.03		
20	16QAM	100	0	17.70	17.92	18.05	18.03	18.10		
20	64QAM	1	0	17.77	17.84	17.33	17.62	17.44	18.3	0
20	64QAM	1	49	17.75	17.94	17.84	17.87	17.90		
20	64QAM	1	99	17.78	17.91	17.61	17.42	17.84		
20	64QAM	50	0	17.66	17.82	17.69	17.74	17.65	18.3	0
20	64QAM	50	24	17.68	17.92	17.89	17.66	17.87		
20	64QAM	50	50	17.74	17.91	17.87	17.65	17.90		
20	64QAM	100	0	17.63	17.83	17.73	17.74	17.73		
20	256QAM	1	0	17.59	17.72	17.61	17.78	17.53	18.3	0
20	256QAM	1	49	17.49	17.87	18.08	18.10	17.95		
20	256QAM	1	99	17.56	17.90	17.79	17.62	18.01		
20	256QAM	50	0	17.67	17.77	17.98	18.02	18.07	18.3	0
20	256QAM	50	24	17.73	17.95	18.04	18.04	18.06		
20	256QAM	50	50	17.69	18.07	18.04	18.12	18.05		
20	256QAM	100	0	17.78	17.94	18.06	18.02	18.09		
Channel				39725	40173	40620	41068	41515	Tune-up limit (dBm)	MPR (dB)
Frequency (MHz)				2503.5	2548.3	2593	2637.8	2682.5		
15	QPSK	1	0	17.32	17.44	17.37	17.64	17.50	18.3	0
15	QPSK	1	37	17.48	17.75	17.67	17.66	17.71		
15	QPSK	1	74	17.44	17.47	17.54	17.45	17.62		
15	QPSK	36	0	17.36	17.73	17.68	17.72	17.73	18.3	0
15	QPSK	36	20	17.60	17.83	17.75	17.80	17.88		
15	QPSK	36	39	17.51	17.81	17.79	17.77	17.88		
15	QPSK	75	0	17.53	17.73	17.58	17.77	17.78		
15	16QAM	1	0	17.75	17.78	17.73	17.84	17.68	18.3	0
15	16QAM	1	37	17.63	17.91	17.85	17.96	18.04		
15	16QAM	1	74	17.76	17.80	17.72	17.81	17.99		
15	16QAM	36	0	17.56	17.59	17.66	17.72	17.61	18.3	0
15	16QAM	36	20	17.59	17.85	17.70	17.80	17.79		
15	16QAM	36	39	17.55	17.77	17.81	17.81	17.83		
15	16QAM	75	0	17.49	17.85	17.69	17.79	17.88		
15	64QAM	1	0	17.57	17.64	17.44	17.74	17.65	18.3	0
15	64QAM	1	37	17.56	17.91	17.77	17.84	17.89		
15	64QAM	1	74	17.68	17.61	17.72	17.72	17.90		
15	64QAM	36	0	17.55	17.77	17.60	17.80	17.65	18.3	0
15	64QAM	36	20	17.61	17.81	17.74	17.87	17.93		
15	64QAM	36	39	17.59	17.86	17.83	17.82	17.90		
15	64QAM	75	0	17.59	17.78	17.63	17.75	17.84		

15	256QAM	1	0	17.60	17.76	17.56	17.77	17.56	18.3	0
15	256QAM	1	37	17.46	17.89	18.06	18.09	17.90		
15	256QAM	1	74	17.53	17.86	17.78	17.63	18.00		
15	256QAM	36	0	17.70	17.79	17.93	18.04	18.06	18.3	0
15	256QAM	36	20	17.77	17.94	18.09	18.02	18.09		
15	256QAM	36	39	17.68	18.10	17.99	18.05	18.04		
15	256QAM	75	0	17.81	17.89	18.08	18.05	18.09		
Channel				39700	40160	40620	41080	41540	Tune-up limit (dBm)	MPR (dB)
Frequency (MHz)				2501	2547	2593	2639	2685		
10	QPSK	1	0	17.04	17.17	17.17	17.2	17.18	18.3	0
10	QPSK	1	25	17.04	17.48	17.34	17.48	17.38		
10	QPSK	1	49	17.16	17.28	17.21	17.26	17.24		
10	QPSK	25	0	17.27	17.42	17.52	17.5	17.48	18.3	0
10	QPSK	25	12	17.3	17.61	17.44	17.57	17.54		
10	QPSK	25	25	17.25	17.57	17.4	17.54	17.49		
10	QPSK	50	0	17.22	17.6	17.46	17.58	17.44		
10	16QAM	1	0	17.4	17.58	17.45	17.54	17.47	18.3	0
10	16QAM	1	25	17.49	17.78	17.66	17.8	17.7		
10	16QAM	1	49	17.49	17.53	17.66	17.52	17.44		
10	16QAM	25	0	17.24	17.55	17.53	17.59	17.54	18.3	0
10	16QAM	25	12	17.37	17.64	17.63	17.62	17.55		
10	16QAM	25	25	17.3	17.69	17.62	17.65	17.58		
10	16QAM	50	0	17.34	17.63	17.49	17.64	17.51		
10	64QAM	1	0	17.55	17.67	17.20	17.49	17.73	18.3	0
10	64QAM	1	25	17.51	17.83	17.53	17.99	17.94		
10	64QAM	1	49	17.35	17.47	17.35	17.40	17.47		
10	64QAM	25	0	17.29	17.53	17.42	17.57	17.56	18.3	0
10	64QAM	25	12	17.31	17.68	17.42	17.66	17.56		
10	64QAM	25	25	17.40	17.48	17.49	17.59	17.54		
10	64QAM	50	0	17.23	17.60	17.35	17.59	17.52		
10	256QAM	1	0	17.56	17.76	17.58	17.82	17.55	18.3	0
10	256QAM	1	25	17.45	17.91	18.10	18.10	17.87		
10	256QAM	1	49	17.52	17.85	17.73	17.58	17.95		
10	256QAM	25	0	17.74	17.81	17.93	18.07	18.05	18.3	0
10	256QAM	25	12	17.73	17.94	18.13	17.98	18.06		
10	256QAM	25	25	17.68	18.09	17.98	18.01	18.09		
10	256QAM	50	0	17.76	17.91	18.03	18.02	18.07		
Channel				39675	40148	40620	41093	41565	Tune-up limit (dBm)	MPR (dB)
Frequency (MHz)				2498.5	2545.8	2593	2640.30	2687.5		
5	QPSK	1	0	17.11	17.45	17.36	17.37	17.31	18.3	0
5	QPSK	1	12	17.09	17.56	17.28	17.46	17.37		
5	QPSK	1	24	17.11	17.49	17.38	17.44	17.42		
5	QPSK	12	0	17.32	17.61	17.50	17.57	17.43	18.3	0
5	QPSK	12	7	17.33	17.71	17.49	17.54	17.55		
5	QPSK	12	13	17.24	17.66	17.57	17.62	17.60		
5	QPSK	25	0	17.26	17.65	17.51	17.56	17.65		
5	16QAM	1	0	17.45	17.65	17.74	17.74	17.59	18.3	0
5	16QAM	1	12	17.40	17.84	17.78	17.74	17.63		
5	16QAM	1	24	17.49	17.83	17.80	17.73	17.66		
5	16QAM	12	0	17.28	17.65	17.83	17.67	17.60	18.3	0
5	16QAM	12	7	17.37	17.67	17.57	17.70	17.62		
5	16QAM	12	13	17.32	17.66	17.59	17.61	17.57		
5	16QAM	25	0	17.32	17.66	17.61	17.77	17.60		
5	64QAM	1	0	17.44	17.66	17.62	17.68	17.56	18.3	0
5	64QAM	1	12	17.29	17.67	17.66	17.70	17.59		
5	64QAM	1	24	17.40	17.59	17.64	17.67	17.49		

5	64QAM	12	0	17.31	17.59	17.51	17.62	17.46	18.3	0
5	64QAM	12	7	17.33	17.67	17.52	17.65	17.58		
5	64QAM	12	13	17.31	17.65	17.53	17.62	17.52		
5	64QAM	25	0	17.30	17.58	17.49	17.60	17.53		
5	256QAM	1	0	17.55	17.74	17.53	17.80	17.52	18.3	0
5	256QAM	1	12	17.46	17.94	18.05	18.06	17.89		
5	256QAM	1	24	17.51	17.87	17.75	17.61	17.93		
5	256QAM	12	0	17.79	17.79	17.90	18.05	18.04	18.3	0
5	256QAM	12	7	17.75	17.96	18.09	18.02	18.05		
5	256QAM	12	13	17.66	18.04	18.03	18.04	18.04		
5	256QAM	25	0	17.72	17.91	18.07	18.00	18.07		

<LTE Band 48>

BW [MHz]	Modulation	RB Size	RB Offset	Power Low Ch. / Freq.	Power Low Middle Ch. / Freq.	Power High Middle Ch. / Freq.	Power High Ch. / Freq.	Tune-up limit (dBm)	MPR (dB)
Channel				55340	55830	56150	56640		
Frequency (MHz)				3560	3609	3641	3690		
20	QPSK	1	0	13.56	13.60	13.76	13.79	14.3	0
20	QPSK	1	49	13.67	14.09	13.80	14.04		
20	QPSK	1	99	13.65	13.79	13.51	13.87		
20	QPSK	50	0	13.38	13.82	13.86	14.04	14.3	0
20	QPSK	50	24	13.52	14.05	13.95	14.00		
20	QPSK	50	50	13.45	14.00	13.82	14.03		
20	QPSK	100	0	13.48	14.06	13.85	13.78		
20	16QAM	1	0	13.68	13.30	13.74	13.57	14.3	0
20	16QAM	1	49	13.81	13.67	13.85	13.62		
20	16QAM	1	99	13.46	13.62	13.66	13.69		
20	16QAM	50	0	13.61	13.39	13.71	13.55	14.3	0
20	16QAM	50	24	13.68	13.60	13.81	13.63		
20	16QAM	50	50	13.54	13.55	13.74	13.60		
20	16QAM	100	0	13.62	13.55	13.78	13.57		
20	64QAM	1	0	13.54	13.40	13.54	13.46	14.3	0
20	64QAM	1	49	13.76	13.65	13.87	13.70		
20	64QAM	1	99	13.48	13.48	13.83	13.57		
20	64QAM	50	0	13.57	13.44	13.70	13.51	14.3	0
20	64QAM	50	24	13.71	13.56	13.87	13.59		
20	64QAM	50	50	13.56	13.50	13.81	13.55		
20	64QAM	100	0	13.56	13.51	13.70	13.48		
20	256QAM	1	0	13.47	13.58	13.66	13.70	14.3	0
20	256QAM	1	49	13.60	14.00	13.75	14.00		
20	256QAM	1	99	13.56	13.74	13.47	13.82		
20	256QAM	50	0	13.31	13.80	13.83	14.00	14.3	0
20	256QAM	50	24	13.44	13.99	13.88	13.94		
20	256QAM	50	50	13.39	13.96	13.81	13.94		
20	256QAM	100	0	13.43	13.97	13.79	13.74		
Channel				55315	55820	56160	56665	Tune-up limit (dBm)	MPR (dB)
Frequency (MHz)				3557.5	3608	3642	3692.5		
15	QPSK	1	0	13.51	13.54	13.75	13.76	14.3	0
15	QPSK	1	37	13.60	14.00	13.80	14.00		
15	QPSK	1	74	13.57	13.69	13.51	13.85		
15	QPSK	36	0	13.28	13.79	13.78	13.96	14.3	0
15	QPSK	36	20	13.44	13.99	13.85	13.92		
15	QPSK	36	39	13.36	13.99	13.80	14.00		
15	QPSK	75	0	13.44	13.97	13.78	13.74		
15	16QAM	1	0	13.66	13.21	13.73	13.55	14.3	0
15	16QAM	1	37	13.77	13.57	13.77	13.59		
15	16QAM	1	74	13.36	13.57	13.65	13.65		
15	16QAM	36	0	13.58	13.33	13.70	13.54	14.3	0
15	16QAM	36	20	13.68	13.50	13.74	13.58		
15	16QAM	36	39	13.53	13.54	13.67	13.55		
15	16QAM	75	0	13.59	13.46	13.73	13.55		
15	64QAM	1	0	13.50	13.31	13.46	13.45	14.3	0
15	64QAM	1	37	13.70	13.55	13.77	13.65		
15	64QAM	1	74	13.48	13.39	13.76	13.57		
15	64QAM	36	0	13.56	13.42	13.62	13.48	14.3	0
15	64QAM	36	20	13.70	13.54	13.83	13.57		
15	64QAM	36	39	13.53	13.50	13.80	13.49		
15	64QAM	75	0	13.53	13.41	13.61	13.42		

15	256QAM	1	0	13.52	13.62	13.71	13.67	14.3	0
15	256QAM	1	37	13.57	13.97	13.70	14.00		
15	256QAM	1	74	13.52	13.72	13.49	13.84		
15	256QAM	36	0	13.28	13.79	13.79	14.00	14.3	0
15	256QAM	36	20	13.43	14.00	13.89	13.96		
15	256QAM	36	39	13.44	13.92	13.77	13.99		
15	256QAM	75	0	13.46	13.95	13.84	13.70		
Channel				55290	55815	56165	56690	Tune-up limit (dBm)	MPR (dB)
Frequency (MHz)				3555	3607.5	3642.5	3695		
10	QPSK	1	0	13.47	13.56	13.69	13.71	14.3	0
10	QPSK	1	25	13.64	14.02	13.80	14.04		
10	QPSK	1	49	13.60	13.77	13.42	13.82		
10	QPSK	25	0	13.28	13.75	13.79	13.96	14.3	0
10	QPSK	25	12	13.45	13.97	13.95	13.94		
10	QPSK	25	25	13.43	13.93	13.72	14.02		
10	QPSK	50	0	13.42	14.00	13.75	13.71		
10	16QAM	1	0	13.61	13.26	13.64	13.51	14.3	0
10	16QAM	1	25	13.72	13.59	13.80	13.60		
10	16QAM	1	49	13.40	13.62	13.61	13.60		
10	16QAM	25	0	13.51	13.36	13.65	13.55	14.3	0
10	16QAM	25	12	13.59	13.55	13.71	13.58		
10	16QAM	25	25	13.45	13.45	13.69	13.57		
10	16QAM	50	0	13.62	13.53	13.74	13.54		
10	64QAM	1	0	13.45	13.37	13.50	13.36	14.3	0
10	64QAM	1	25	13.74	13.65	13.86	13.67		
10	64QAM	1	49	13.46	13.41	13.73	13.52		
10	64QAM	25	0	13.50	13.42	13.61	13.50	14.3	0
10	64QAM	25	12	13.67	13.47	13.78	13.57		
10	64QAM	25	25	13.49	13.40	13.78	13.49		
10	64QAM	50	0	13.46	13.44	13.60	13.44		
10	256QAM	1	0	13.50	13.61	13.71	13.70	14.3	0
10	256QAM	1	25	13.55	13.97	13.70	13.98		
10	256QAM	1	49	13.54	13.72	13.45	13.83		
10	256QAM	25	0	13.28	13.74	13.80	13.97	14.3	0
10	256QAM	25	12	13.40	13.99	13.90	13.98		
10	256QAM	25	25	13.48	13.90	13.74	14.00		
10	256QAM	50	0	13.43	13.95	13.87	13.67		
Channel				55265	55810	56170	56715	Tune-up limit (dBm)	MPR (dB)
Frequency (MHz)				3552.5	3607	3643	3697.5		
5	QPSK	1	0	13.54	13.60	13.66	13.78	14.3	0
5	QPSK	1	12	13.65	14.08	13.79	14.00		
5	QPSK	1	24	13.65	13.76	13.48	13.82		
5	QPSK	12	0	13.37	13.81	13.79	14.01	14.3	0
5	QPSK	12	7	13.50	13.95	13.91	13.90		
5	QPSK	12	13	13.42	13.99	13.74	13.93		
5	QPSK	25	0	13.38	14.04	13.82	13.69		
5	16QAM	1	0	13.60	13.22	13.72	13.51	14.3	0
5	16QAM	1	12	13.76	13.66	13.75	13.61		
5	16QAM	1	24	13.42	13.59	13.60	13.62		
5	16QAM	12	0	13.53	13.34	13.63	13.49	14.3	0
5	16QAM	12	7	13.58	13.55	13.73	13.59		
5	16QAM	12	13	13.53	13.48	13.73	13.58		
5	16QAM	25	0	13.52	13.45	13.72	13.52		
5	64QAM	1	0	13.53	13.36	13.51	13.38	14.3	0
5	64QAM	1	12	13.69	13.55	13.78	13.70		
5	64QAM	1	24	13.40	13.44	13.78	13.49		

5	64QAM	12	0	13.54	13.37	13.64	13.46	14.3	0
5	64QAM	12	7	13.65	13.50	13.84	13.50		
5	64QAM	12	13	13.54	13.45	13.78	13.45		
5	64QAM	25	0	13.46	13.51	13.64	13.44		
5	256QAM	1	0	13.49	13.56	13.66	13.68	14.3	0
5	256QAM	1	12	13.55	13.97	13.70	13.98		
5	256QAM	1	24	13.54	13.73	13.50	13.84		
5	256QAM	12	0	13.33	13.78	13.80	13.99	14.3	0
5	256QAM	12	7	13.43	13.95	13.90	13.98		
5	256QAM	12	13	13.51	13.86	13.71	14.00		
5	256QAM	25	0	13.45	13.95	13.89	13.67		

UAT Reduced Power Mode for Hotspot On

<LTE Band 38>

BW [MHz]	Modulation	RB Size	RB Offset	Power Low Ch. / Freq.	Power Middle Ch. / Freq.	Power High Ch. / Freq.	Tune-up limit (dBm)	MPR (dB)
Channel				37850	38000	38150		
Frequency (MHz)				2580	2595	2610		
20	QPSK	1	0	17.24	17.22	17.25	17.8	0
20	QPSK	1	49	17.29	17.27	17.28		
20	QPSK	1	99	17.23	17.18	17.27		
20	QPSK	50	0	17.09	17.05	16.94	17.8	0
20	QPSK	50	24	17.12	17.06	16.95		
20	QPSK	50	50	17.10	16.96	16.93		
20	QPSK	100	0	16.97	16.96	16.89		
20	16QAM	1	0	17.26	17.22	17.22	17.8	0
20	16QAM	1	49	17.22	17.23	17.27		
20	16QAM	1	99	17.28	17.28	17.20		
20	16QAM	50	0	17.05	17.20	17.05	17.8	0
20	16QAM	50	24	17.14	17.20	17.18		
20	16QAM	50	50	17.15	17.10	16.97		
20	16QAM	100	0	16.96	17.10	16.93		
20	64QAM	1	0	16.84	16.72	16.88	17.8	0
20	64QAM	1	49	16.94	16.77	16.75		
20	64QAM	1	99	17.09	16.73	16.65		
20	64QAM	50	0	16.57	16.60	16.59	17.8	0
20	64QAM	50	24	16.75	16.63	16.61		
20	64QAM	50	50	16.71	16.46	16.45		
20	64QAM	100	0	16.71	16.61	16.62		
20	256QAM	1	0	16.34	16.22	16.28	16.8	0
20	256QAM	1	49	16.24	16.27	16.25		
20	256QAM	1	99	16.29	16.23	16.15		
20	256QAM	50	0	16.07	16.10	16.09	16.8	0
20	256QAM	50	24	16.25	16.13	16.11		
20	256QAM	50	50	16.21	15.96	15.95		
20	256QAM	100	0	16.21	16.11	16.12		
Channel				37825	38000	38175	Tune-up limit (dBm)	MPR (dB)
Frequency (MHz)				2577.5	2595	2612.5		
15	QPSK	1	0	17.13	17.18	17.08	17.8	0
15	QPSK	1	37	17.28	17.13	17.26		
15	QPSK	1	74	17.16	17.02	17.15		
15	QPSK	36	0	16.92	16.99	16.90	17.8	0
15	QPSK	36	20	17.08	17.04	16.82		
15	QPSK	36	39	17.09	16.86	16.92		
15	QPSK	75	0	16.96	16.76	16.78		
15	16QAM	1	0	17.08	17.13	17.11	17.8	0
15	16QAM	1	37	17.04	17.12	17.21		
15	16QAM	1	74	17.24	17.17	17.12		
15	16QAM	36	0	16.98	17.14	16.85	17.8	0
15	16QAM	36	20	16.94	17.19	17.10		
15	16QAM	36	39	17.04	16.98	16.84		
15	16QAM	75	0	16.82	17.02	16.84		
15	64QAM	1	0	16.65	16.63	16.77	17.8	0
15	64QAM	1	37	16.83	16.63	16.68		
15	64QAM	1	74	16.90	16.53	16.60		
15	64QAM	36	0	16.46	16.59	16.54	17.8	0
15	64QAM	36	20	16.64	16.56	16.57		
15	64QAM	36	39	16.56	16.26	16.43		

15	64QAM	75	0	16.66	16.48	16.42		
15	256QAM	1	0	16.32	16.15	16.21	16.8	0
15	256QAM	1	37	16.15	16.20	16.15		
15	256QAM	1	74	16.28	16.21	16.07		
15	256QAM	36	0	16.07	16.02	16.06	16.8	0
15	256QAM	36	20	16.20	16.10	16.11		
15	256QAM	36	39	16.19	15.92	15.92		
15	256QAM	75	0	16.11	16.03	16.06		
Channel				37800	38000	38200	Tune-up limit (dBm)	MPR (dB)
Frequency (MHz)				2575	2595	2615		
10	QPSK	1	0	17.15	17.07	17.09	17.8	0
10	QPSK	1	25	17.21	17.19	17.21		
10	QPSK	1	49	17.07	17.09	17.15		
10	QPSK	25	0	17.00	16.99	16.88	17.8	0
10	QPSK	25	12	16.95	16.94	16.89		
10	QPSK	25	25	16.95	16.79	16.79		
10	QPSK	50	0	16.77	16.90	16.82		
10	16QAM	1	0	17.20	17.11	17.17	17.8	0
10	16QAM	1	25	17.04	17.20	17.12		
10	16QAM	1	49	17.27	17.24	17.07		
10	16QAM	25	0	16.95	17.13	16.87	17.8	0
10	16QAM	25	12	16.97	17.01	17.00		
10	16QAM	25	25	17.11	17.06	16.84		
10	16QAM	50	0	16.91	16.93	16.81		
10	64QAM	1	0	16.66	16.60	16.81	17.8	0
10	64QAM	1	25	16.88	16.76	16.66		
10	64QAM	1	49	16.95	16.70	16.64		
10	64QAM	25	0	16.40	16.46	16.57	17.8	0
10	64QAM	25	12	16.62	16.50	16.58		
10	64QAM	25	25	16.60	16.44	16.32		
10	64QAM	50	0	16.55	16.51	16.46		
10	256QAM	1	0	16.22	16.14	16.13	16.8	0
10	256QAM	1	25	16.11	16.14	16.10		
10	256QAM	1	49	16.20	16.19	15.99		
10	256QAM	25	0	15.98	15.94	16.04	16.8	0
10	256QAM	25	12	16.17	16.02	16.07		
10	256QAM	25	25	16.17	15.85	15.90		
10	256QAM	50	0	16.03	16.03	15.97		
Channel				37775	38000	38225	Tune-up limit (dBm)	MPR (dB)
Frequency (MHz)				2572.5	2595	2617.5		
5	QPSK	1	0	17.18	17.09	17.11	17.8	0
5	QPSK	1	12	17.12	17.20	17.19		
5	QPSK	1	24	17.09	17.05	17.24		
5	QPSK	12	0	17.00	16.97	16.88	17.8	0
5	QPSK	12	7	17.07	16.93	16.79		
5	QPSK	12	13	17.04	16.91	16.80		
5	QPSK	25	0	16.84	16.82	16.73		
5	16QAM	1	0	17.16	17.21	17.16	17.8	0
5	16QAM	1	12	17.10	17.06	17.21		
5	16QAM	1	24	17.10	17.11	17.07		
5	16QAM	12	0	16.97	17.19	16.90	17.8	0
5	16QAM	12	7	17.12	17.09	17.17		
5	16QAM	12	13	17.09	17.07	16.85		
5	16QAM	25	0	16.78	16.98	16.79		
5	64QAM	1	0	16.81	16.52	16.73	17.8	0
5	64QAM	1	12	16.92	16.72	16.73		

5	64QAM	1	24	16.94	16.53	16.61		
5	64QAM	12	0	16.51	16.45	16.54	17.8	0
5	64QAM	12	7	16.60	16.44	16.46		
5	64QAM	12	13	16.63	16.43	16.31		
5	64QAM	25	0	16.55	16.46	16.48		
5	256QAM	1	0	16.17	16.05	16.08	16.8	0
5	256QAM	1	12	16.09	16.06	16.08		
5	256QAM	1	24	16.19	16.13	15.90		
5	256QAM	12	0	15.95	15.87	16.04	16.8	0
5	256QAM	12	7	16.15	15.96	15.99		
5	256QAM	12	13	16.17	15.81	15.90		
5	256QAM	25	0	16.00	16.00	15.95		

<LTE Band 41_PC3>

BW [MHz]	Modulation	RB Size	RB Offset	Power Low Ch. / Freq.	Power Low Middle Ch. / Freq.	Power Middle Ch. / Freq.	Power High Middle Ch. / Freq.	Power High Ch. / Freq.	Tune-up limit (dBm)	MPR (dB)
Channel				39750	40185	40620	41055	41490		
Frequency (MHz)				2506	2549.5	2593	2636.5	2680		
20	QPSK	1	0	17.34	17.24	17.39	17.21	17.12	17.8	0
20	QPSK	1	49	17.30	17.44	17.47	17.34	17.18		
20	QPSK	1	99	17.28	17.22	17.32	17.16	17.17		
20	QPSK	50	0	17.41	17.30	17.29	17.27	17.04	17.8	0
20	QPSK	50	24	17.45	17.44	17.46	17.33	17.31		
20	QPSK	50	50	17.39	17.40	17.42	17.32	17.30		
20	QPSK	100	0	17.42	17.33	17.45	17.33	17.18		
20	16QAM	1	0	17.34	17.30	17.11	17.14	16.91	17.8	0
20	16QAM	1	49	17.27	17.29	17.35	17.33	17.33		
20	16QAM	1	99	17.21	17.38	17.34	16.94	17.09		
20	16QAM	50	0	17.30	17.18	17.40	17.36	17.14	17.8	0
20	16QAM	50	24	17.31	17.36	17.43	17.46	17.37		
20	16QAM	50	50	17.27	17.28	17.39	17.35	17.36		
20	16QAM	100	0	17.33	17.25	17.29	17.34	17.30		
20	64QAM	1	0	16.86	16.97	16.76	16.69	16.68	17.8	0
20	64QAM	1	49	16.77	16.99	16.86	17.08	16.97		
20	64QAM	1	99	16.74	16.99	16.64	16.78	16.77		
20	64QAM	50	0	17.13	17.21	16.91	17.02	16.98	17.8	0
20	64QAM	50	24	17.05	17.23	17.12	17.03	17.28		
20	64QAM	50	50	16.89	17.22	17.17	16.97	17.18		
20	64QAM	100	0	16.93	17.08	17.10	17.05	17.06		
20	256QAM	1	0	16.26	16.37	16.16	16.09	16.08	16.8	0
20	256QAM	1	49	16.17	16.39	16.26	16.48	16.37		
20	256QAM	1	99	16.14	16.39	16.04	16.18	16.17		
20	256QAM	50	0	16.13	16.21	16.31	16.42	16.38	16.8	0
20	256QAM	50	24	16.45	16.21	16.12	16.43	16.38		
20	256QAM	50	50	16.29	16.22	16.17	16.37	16.28		
20	256QAM	100	0	16.33	16.48	16.10	16.45	16.46		
Channel				39725	40173	40620	41068	41515	Tune-up limit (dBm)	MPR (dB)
Frequency (MHz)				2503.5	2548.3	2593	2637.8	2682.5		
15	QPSK	1	0	17.26	17.08	17.32	17.41	17.15	17.8	0
15	QPSK	1	37	17.19	17.38	17.41	17.44	17.39		
15	QPSK	1	74	17.33	17.04	17.45	17.29	17.35		
15	QPSK	36	0	17.34	17.19	17.43	17.43	17.26	17.8	0
15	QPSK	36	20	17.41	17.46	17.45	17.41	17.39		
15	QPSK	36	39	17.46	17.32	17.46	17.45	17.34		
15	QPSK	75	0	17.34	17.31	17.43	17.40	17.40		
15	16QAM	1	0	17.43	17.25	17.46	17.41	17.33	17.8	0
15	16QAM	1	37	17.28	17.34	17.40	17.46	17.41		
15	16QAM	1	74	17.45	17.36	17.39	17.40	17.44		
15	16QAM	36	0	17.30	17.33	17.42	17.43	17.36	17.8	0
15	16QAM	36	20	17.41	17.45	17.46	17.45	17.41		
15	16QAM	36	39	17.27	17.37	17.41	17.41	17.43		
15	16QAM	75	0	17.33	17.35	17.43	17.39	17.40		
15	64QAM	1	0	17.19	17.10	17.10	17.38	16.93	17.8	0
15	64QAM	1	37	17.15	17.27	17.40	17.40	17.34		
15	64QAM	1	74	17.06	17.04	17.26	17.24	17.30		
15	64QAM	36	0	17.33	17.31	17.40	17.40	17.35	17.8	0
15	64QAM	36	20	17.45	17.45	17.45	17.38	17.37		
15	64QAM	36	39	17.41	17.37	17.46	17.36	17.36		
15	64QAM	75	0	17.37	17.39	17.44	17.39	17.35		

15	256QAM	1	0	16.18	16.35	16.16	16.04	16.05	16.8	0
15	256QAM	1	37	16.10	16.35	16.22	16.28	16.33		
15	256QAM	1	74	16.04	16.33	15.95	16.17	16.14		
15	256QAM	36	0	16.03	16.13	16.26	16.41	16.33	16.8	0
15	256QAM	36	20	16.36	16.13	16.08	16.42	16.29		
15	256QAM	36	39	16.21	16.18	16.16	16.35	16.18		
15	256QAM	75	0	16.31	16.40	16.08	16.39	16.42		
Channel				39700	40160	40620	41080	41540	Tune-up limit (dBm)	MPR (dB)
Frequency (MHz)				2501	2547	2593	2639	2685		
10	QPSK	1	0	17.04	16.98	17.33	17.22	17.04	17.8	0
10	QPSK	1	25	17.04	17.11	17.43	17.27	17.18		
10	QPSK	1	49	17.07	16.97	17.19	17.22	16.99		
10	QPSK	25	0	17.11	17.16	17.35	17.04	16.96	17.8	0
10	QPSK	25	12	17.42	17.27	17.39	17.11	17.22		
10	QPSK	25	25	17.24	17.20	17.37	17.41	17.02		
10	QPSK	50	0	17.11	17.17	17.33	17.36	17.27		
10	16QAM	1	0	17.17	17.03	17.32	17.33	16.77	17.8	0
10	16QAM	1	25	17.29	17.37	17.46	17.25	17.38		
10	16QAM	1	49	17.42	17.04	17.33	17.26	17.10		
10	16QAM	25	0	17.18	17.14	17.41	17.38	16.95	17.8	0
10	16QAM	25	12	17.26	17.35	17.44	17.21	17.37		
10	16QAM	25	25	17.42	17.07	17.39	17.41	17.33		
10	16QAM	50	0	17.18	17.19	17.40	17.43	16.92		
10	64QAM	1	0	17.17	16.60	16.79	16.80	16.83	17.8	0
10	64QAM	1	25	17.11	17.06	17.21	16.87	17.16		
10	64QAM	1	49	17.01	16.87	17.20	16.91	16.77		
10	64QAM	25	0	17.15	17.19	17.44	17.13	16.97	17.8	0
10	64QAM	25	12	17.41	17.05	17.38	17.45	17.10		
10	64QAM	25	25	17.21	17.21	17.40	17.41	17.29		
10	64QAM	50	0	17.27	16.97	17.41	17.19	17.18		
10	256QAM	1	0	16.18	16.30	16.10	16.02	15.96	16.8	0
10	256QAM	1	25	16.10	16.30	16.22	16.23	16.25		
10	256QAM	1	49	16.00	16.33	15.90	16.16	16.09		
10	256QAM	25	0	15.95	16.13	16.16	16.37	16.31	16.8	0
10	256QAM	25	12	16.26	16.07	16.00	16.20	16.20		
10	256QAM	25	25	16.14	16.13	16.09	16.34	16.17		
10	256QAM	50	0	16.31	16.36	16.06	16.37	16.37		
Channel				39675	40148	40620	41093	41565	Tune-up limit (dBm)	MPR (dB)
Frequency (MHz)				2498.5	2545.8	2593	2640.30	2687.5		
5	QPSK	1	0	17.20	17.10	17.29	17.34	17.26	17.8	0
5	QPSK	1	12	17.05	17.13	17.39	17.44	17.24		
5	QPSK	1	24	17.18	17.14	17.38	17.33	17.25		
5	QPSK	12	0	17.15	17.25	17.46	17.44	17.34	17.8	0
5	QPSK	12	7	17.20	17.34	17.40	17.40	17.41		
5	QPSK	12	13	17.23	17.33	17.42	17.44	17.37		
5	QPSK	25	0	17.21	17.27	17.43	17.42	17.25		
5	16QAM	1	0	17.32	17.23	17.45	17.39	17.33	17.8	0
5	16QAM	1	12	17.33	17.23	17.41	17.34	17.35		
5	16QAM	1	24	17.26	17.28	17.39	17.44	17.29		
5	16QAM	12	0	17.20	17.19	17.40	17.43	17.23	17.8	0
5	16QAM	12	7	17.21	17.27	17.46	17.41	17.37		
5	16QAM	12	13	17.24	17.25	17.32	17.35	17.33		
5	16QAM	25	0	17.28	17.27	17.38	17.44	17.28		
5	64QAM	1	0	17.12	16.95	17.15	17.24	17.12	17.8	0
5	64QAM	1	12	17.13	17.10	17.22	17.39	17.15		
5	64QAM	1	24	17.09	17.15	17.30	17.40	17.25		

5	64QAM	12	0	17.24	17.20	17.44	17.43	17.37	17.8	0
5	64QAM	12	7	17.30	17.41	17.35	17.45	17.41		
5	64QAM	12	13	17.29	17.32	17.38	17.40	17.36		
5	64QAM	25	0	17.25	17.35	17.36	17.32	17.35		
5	256QAM	1	0	16.08	16.23	16.05	16.00	15.92	16.8	0
5	256QAM	1	12	16.10	16.27	16.20	16.20	16.18		
5	256QAM	1	24	15.91	16.29	15.83	16.07	16.08		
5	256QAM	12	0	15.92	16.04	16.14	16.29	16.28	16.8	0
5	256QAM	12	7	16.25	15.99	15.95	16.17	16.17		
5	256QAM	12	13	16.09	16.09	16.03	16.25	16.11		
5	256QAM	25	0	16.30	16.33	16.03	16.27	16.32		

<LTE Band 41_PC2>

BW [MHz]	Modulation	RB Size	RB Offset	Power Low Ch. / Freq.	Power Low Middle Ch. / Freq.	Power Middle Ch. / Freq.	Power High Middle Ch. / Freq.	Power High Ch. / Freq.	Tune-up limit (dBm)	MPR (dB)
Channel				39750	40185	40620	41055	41490		
Frequency (MHz)				2506	2549.5	2593	2636.5	2680		
20	QPSK	1	0	19.03	18.92	19.07	18.93	18.99	19.8	0
20	QPSK	1	49	19.06	19.12	19.17	19.13	19.02		
20	QPSK	1	99	19.01	19.10	19.12	19.12	19.00		
20	QPSK	50	0	19.05	19.05	19.00	18.88	18.91	19.8	0
20	QPSK	50	24	19.07	19.08	19.09	19.05	18.98		
20	QPSK	50	50	19.06	19.06	19.04	19.04	18.84		
20	QPSK	100	0	19.11	19.03	19.09	18.79	18.81		
20	16QAM	1	0	18.96	18.98	19.02	18.98	19.07	19.8	0
20	16QAM	1	49	18.92	18.81	18.85	18.79	18.98		
20	16QAM	1	99	19.01	18.88	18.99	19.03	18.99		
20	16QAM	50	0	19.13	19.04	19.07	18.88	19.04	19.8	0
20	16QAM	50	24	19.01	18.95	18.89	18.88	18.88		
20	16QAM	50	50	19.09	18.81	18.87	18.80	18.96		
20	16QAM	100	0	19.13	19.05	18.96	18.87	18.83		
20	64QAM	1	0	18.92	18.98	18.90	19.09	18.89	19.8	0
20	64QAM	1	49	19.16	18.95	18.91	18.98	18.92		
20	64QAM	1	99	18.92	18.94	19.11	18.92	18.94		
20	64QAM	50	0	18.14	18.28	18.17	18.21	18.17	19.8	0
20	64QAM	50	24	18.23	18.36	18.29	18.27	18.38		
20	64QAM	50	50	18.21	18.39	18.32	18.22	18.42		
20	64QAM	100	0	18.17	18.28	18.22	18.26	18.31		
20	256QAM	1	0	18.03	17.92	18.07	17.93	17.99	19.3	0
20	256QAM	1	49	18.06	18.12	18.17	18.13	18.02		
20	256QAM	1	99	18.01	18.10	18.12	18.12	18.00		
20	256QAM	50	0	18.05	18.05	18.00	17.88	17.91	19.3	0
20	256QAM	50	24	18.07	18.08	18.09	18.05	17.98		
20	256QAM	50	50	18.06	18.06	18.04	18.04	17.84		
20	256QAM	100	0	18.11	18.03	18.09	17.89	17.81		
Channel				39725	40173	40620	41068	41515	Tune-up limit (dBm)	MPR (dB)
Frequency (MHz)				2503.5	2548.3	2593	2637.8	2682.5		
15	QPSK	1	0	18.98	18.83	19.06	18.74	18.80	19.8	0
15	QPSK	1	37	18.96	19.08	18.97	18.97	18.94		
15	QPSK	1	74	18.88	18.99	19.05	18.92	18.81		
15	QPSK	36	0	18.91	18.98	18.92	18.72	18.74	19.8	0
15	QPSK	36	20	19.04	18.98	18.89	18.92	18.86		
15	QPSK	36	39	18.90	18.88	18.89	19.00	18.74		
15	QPSK	75	0	19.10	18.98	19.03	18.73	18.65		
15	16QAM	1	0	18.88	18.78	18.98	18.78	19.02	19.8	0
15	16QAM	1	37	18.84	18.62	18.67	18.72	18.79		
15	16QAM	1	74	18.87	18.84	18.98	18.98	18.79		
15	16QAM	36	0	18.95	18.95	18.87	18.69	18.94	19.8	0
15	16QAM	36	20	18.96	18.87	18.74	18.77	18.74		
15	16QAM	36	39	18.92	18.71	18.67	18.76	18.90		
15	16QAM	75	0	18.98	18.98	18.83	18.72	18.76		
15	64QAM	1	0	18.75	18.86	18.89	18.92	18.74	19.8	0
15	64QAM	1	37	18.99	18.76	18.77	18.92	18.78		
15	64QAM	1	74	18.82	18.84	19.03	18.82	18.86		
15	64QAM	36	0	18.08	18.09	18.03	18.18	18.16	19.8	0
15	64QAM	36	20	18.22	18.23	18.24	18.17	18.23		
15	64QAM	36	39	18.03	18.20	18.22	18.05	18.29		
15	64QAM	75	0	18.01	18.23	18.18	18.16	18.22		

15	256QAM	1	0	18.03	17.90	17.98	17.89	17.93	19.3	0
15	256QAM	1	37	17.97	18.03	18.14	18.08	18.01		
15	256QAM	1	74	17.95	18.07	18.04	18.08	18.00		
15	256QAM	36	0	17.97	18.02	17.99	17.82	17.84	19.3	0
15	256QAM	36	20	18.07	18.08	18.06	18.05	17.93		
15	256QAM	36	39	18.02	18.05	17.99	18.00	17.86		
15	256QAM	75	0	18.09	17.99	18.02	17.85	17.82		
Channel				39700	40160	40620	41080	41540	Tune-up limit (dBm)	MPR (dB)
Frequency (MHz)				2501	2547	2593	2639	2685		
10	QPSK	1	0	18.88	18.85	18.93	18.88	18.83	19.8	0
10	QPSK	1	25	19.03	19.09	19.16	19.04	18.83		
10	QPSK	1	49	18.88	18.93	19.11	19.09	18.83		
10	QPSK	25	0	18.98	18.92	18.87	18.75	18.78	19.8	0
10	QPSK	25	12	18.98	18.95	18.97	18.95	18.94		
10	QPSK	25	25	18.93	19.01	19.03	18.99	18.82		
10	QPSK	50	0	18.96	19.01	18.97	18.74	18.68		
10	16QAM	1	0	18.88	18.91	18.93	18.8	18.96	19.8	0
10	16QAM	1	25	18.91	18.61	18.73	18.74	18.89		
10	16QAM	1	49	18.93	18.78	18.98	18.84	18.8		
10	16QAM	25	0	19.07	19.03	19.06	18.84	19.01	19.8	0
10	16QAM	25	12	18.94	18.94	18.8	18.84	18.76		
10	16QAM	25	25	19.03	18.74	18.7	18.7	18.8		
10	16QAM	50	0	19.1	18.92	18.8	18.85	18.69		
10	64QAM	1	0	18.73	18.89	18.76	18.89	18.71	19.8	0
10	64QAM	1	25	19.11	18.81	18.76	18.81	18.85		
10	64QAM	1	49	18.85	18.84	18.95	18.84	18.86		
10	64QAM	25	0	17.99	18.17	17.98	18.01	18.15	19.8	0
10	64QAM	25	12	18.06	18.32	18.14	18.08	18.37		
10	64QAM	25	25	18.09	18.22	18.13	18.07	18.36		
10	64QAM	50	0	17.99	18.16	18.12	18.17	18.30		
10	256QAM	1	0	18.04	17.93	17.99	17.92	17.89	19.3	0
10	256QAM	1	25	17.97	18.02	18.02	18.06	18.00		
10	256QAM	1	49	17.98	18.07	17.99	18.04	17.96		
10	256QAM	25	0	18.02	18.03	17.97	17.88	17.89	19.3	0
10	256QAM	25	12	18.05	18.08	18.08	18.01	17.94		
10	256QAM	25	25	18.03	18.05	17.95	17.98	17.84		
10	256QAM	50	0	18.04	18.01	18.03	17.85	17.87		
Channel				39675	40148	40620	41093	41565	Tune-up limit (dBm)	MPR (dB)
Frequency (MHz)				2498.5	2545.8	2593	2640.30	2687.5		
5	QPSK	1	0	18.88	18.90	18.91	18.73	18.90	19.8	0
5	QPSK	1	12	18.97	19.11	19.00	19.00	18.83		
5	QPSK	1	24	18.81	18.91	18.94	19.08	18.94		
5	QPSK	12	0	18.86	18.88	18.91	18.87	18.75	19.8	0
5	QPSK	12	7	18.94	18.92	19.05	18.99	18.86		
5	QPSK	12	13	18.86	18.86	19.03	18.84	18.67		
5	QPSK	25	0	18.99	19.02	18.89	18.68	18.63		
5	16QAM	1	0	18.89	18.83	18.88	18.86	19.01	19.8	0
5	16QAM	1	12	18.77	18.74	18.73	18.60	18.96		
5	16QAM	1	24	18.84	18.77	18.98	18.86	18.91		
5	16QAM	12	0	19.11	18.86	18.90	18.73	18.88	19.8	0
5	16QAM	12	7	18.96	18.81	18.85	18.73	18.82		
5	16QAM	12	13	18.93	18.78	18.75	18.70	18.78		
5	16QAM	25	0	19.10	19.03	18.84	18.70	18.74		
5	64QAM	1	0	18.78	18.85	18.79	18.97	18.80	19.8	0
5	64QAM	1	12	19.04	18.75	18.88	18.85	18.76		
5	64QAM	1	24	18.74	18.89	18.93	18.80	18.85		

5	64QAM	12	0	18.05	18.24	18.11	18.20	18.04	19.8	0
5	64QAM	12	7	18.17	18.18	18.24	18.10	18.35		
5	64QAM	12	13	18.13	18.32	18.29	18.11	18.23		
5	64QAM	25	0	18.15	18.18	18.18	18.07	18.14		
5	256QAM	1	0	18.08	17.89	18.03	17.88	17.84	19.3	0
5	256QAM	1	12	17.98	18.01	18.06	18.01	17.95		
5	256QAM	1	24	17.93	18.10	18.02	18.05	18.01		
5	256QAM	12	0	18.00	18.03	17.99	17.87	17.85	19.3	0
5	256QAM	12	7	18.05	18.10	18.04	17.98	17.90		
5	256QAM	12	13	18.06	18.05	17.95	17.95	17.89		
5	256QAM	25	0	18.05	18.03	18.08	17.82	17.92		

<LTE Band 48>

BW [MHz]	Modulation	RB Size	RB Offset	Power Low Ch. / Freq.	Power Low Middle Ch. / Freq.	Power High Middle Ch. / Freq.	Power High Ch. / Freq.	Tune-up limit (dBm)	MPR (dB)
Channel				55340	55830	56150	56640		
Frequency (MHz)				3560	3609	3641	3690		
20	QPSK	1	0	17.93	18.29	18.27	18.05	18.8	0
20	QPSK	1	49	18.13	18.37	18.30	18.24		
20	QPSK	1	99	17.81	18.14	18.16	18.05		
20	QPSK	50	0	18.16	18.27	18.21	18.23	18.8	0
20	QPSK	50	24	18.29	18.36	18.33	18.25		
20	QPSK	50	50	18.15	18.31	18.30	18.20		
20	QPSK	100	0	18.10	18.33	18.22	18.23		
20	16QAM	1	0	18.09	17.99	18.05	17.94	18.8	0
20	16QAM	1	49	18.32	18.13	18.34	18.20		
20	16QAM	1	99	18.02	18.03	18.30	17.98		
20	16QAM	50	0	18.02	17.94	18.16	17.89	18.8	0
20	16QAM	50	24	18.16	18.04	18.33	18.02		
20	16QAM	50	50	17.96	17.95	18.33	17.95		
20	16QAM	100	0	18.06	18.00	18.24	17.93		
20	64QAM	1	0	18.07	17.95	18.04	18.07	18.8	0
20	64QAM	1	49	18.31	18.20	18.25	18.29		
20	64QAM	1	99	17.99	18.01	18.28	18.08		
20	64QAM	50	0	18.06	17.99	18.21	18.03	18.8	0
20	64QAM	50	24	18.17	18.06	18.17	18.15		
20	64QAM	50	50	18.05	17.98	18.20	18.13		
20	64QAM	100	0	18.09	18.02	18.27	18.05		
20	256QAM	1	0	17.23	17.59	17.51	17.35	18.8	0
20	256QAM	1	49	17.43	17.47	17.50	17.54		
20	256QAM	1	99	17.11	17.44	17.46	17.35		
20	256QAM	50	0	17.46	17.57	17.51	17.53	18.8	0
20	256QAM	50	24	17.59	17.46	17.43	17.55		
20	256QAM	50	50	17.45	17.51	17.50	17.50		
20	256QAM	100	0	17.40	17.43	17.52	17.53		
Channel				55315	55820	56160	56665	Tune-up limit (dBm)	MPR (dB)
Frequency (MHz)				3557.5	3608	3642	3692.5		
15	QPSK	1	0	17.87	17.78	18.18	18.14	18.8	0
15	QPSK	1	37	18.06	17.88	18.27	18.29		
15	QPSK	1	74	17.87	17.76	18.23	18.17		
15	QPSK	36	0	18.07	17.93	18.17	18.22	18.8	0
15	QPSK	36	20	18.22	17.97	18.28	18.28		
15	QPSK	36	39	18.13	17.94	18.31	18.30		
15	QPSK	75	0	18.06	18.15	18.26	18.28		
15	16QAM	1	0	18.22	18.14	18.32	18.32	18.8	0
15	16QAM	1	37	18.33	18.23	18.25	18.20		
15	16QAM	1	74	18.25	18.19	18.28	18.36		
15	16QAM	36	0	18.06	17.95	18.22	18.09	18.8	0
15	16QAM	36	20	18.14	18.02	18.30	18.10		
15	16QAM	36	39	18.06	17.94	18.35	18.14		
15	16QAM	75	0	18.12	17.97	18.26	18.03		
15	64QAM	1	0	18.12	18.03	18.24	18.17	18.8	0
15	64QAM	1	37	18.35	18.12	18.33	18.34		
15	64QAM	1	74	18.19	18.06	18.31	18.20		
15	64QAM	36	0	18.09	17.98	18.27	18.11	18.8	0
15	64QAM	36	20	18.17	18.01	18.33	18.12		
15	64QAM	36	39	18.07	17.98	18.21	18.18		
15	64QAM	75	0	18.11	18.03	18.31	18.10		

15	256QAM	1	0	17.19	17.56	17.43	17.32	18.8	0
15	256QAM	1	37	17.41	17.38	17.40	17.49		
15	256QAM	1	74	17.08	17.34	17.44	17.31		
15	256QAM	36	0	17.39	17.49	17.42	17.48	18.8	0
15	256QAM	36	20	17.58	17.38	17.43	17.45		
15	256QAM	36	39	17.45	17.49	17.43	17.46		
15	256QAM	75	0	17.33	17.37	17.52	17.43		
Channel				55290	55815	56165	56690	Tune-up limit (dBm)	MPR (dB)
Frequency (MHz)				3555	3607.5	3642.5	3695		
10	QPSK	1	0	17.75	17.56	17.92	17.78	18.8	0
10	QPSK	1	25	18.06	17.90	18.33	18.05		
10	QPSK	1	49	17.87	17.80	18.19	17.96		
10	QPSK	25	0	17.96	17.81	18.16	17.97	18.8	0
10	QPSK	25	12	18.15	17.95	18.35	18.21		
10	QPSK	25	25	18.09	17.94	18.30	18.15		
10	QPSK	50	0	18.09	17.92	18.29	18.13		
10	16QAM	1	0	18.01	17.83	18.15	17.97	18.8	0
10	16QAM	1	25	18.30	18.23	18.27	18.25		
10	16QAM	1	49	18.15	18.04	18.36	18.21		
10	16QAM	25	0	17.93	17.81	18.11	17.94	18.8	0
10	16QAM	25	12	18.16	17.93	18.32	18.19		
10	16QAM	25	25	17.97	17.96	18.27	18.11		
10	16QAM	50	0	18.08	17.90	18.03	18.09		
10	64QAM	1	0	18.08	17.82	18.24	18.05	18.8	0
10	64QAM	1	25	18.36	18.27	18.34	18.27		
10	64QAM	1	49	18.20	18.08	18.24	18.29		
10	64QAM	25	0	18.06	17.88	18.29	18.07	18.8	0
10	64QAM	25	12	18.27	18.12	18.32	18.33		
10	64QAM	25	25	18.22	18.04	18.27	18.28		
10	64QAM	50	0	18.14	17.99	18.36	18.20		
10	256QAM	1	0	17.10	17.51	17.42	17.30	18.8	0
10	256QAM	1	25	17.33	17.35	17.30	17.46		
10	256QAM	1	49	17.07	17.25	17.35	17.27		
10	256QAM	25	0	17.34	17.42	17.36	17.47	18.8	0
10	256QAM	25	12	17.54	17.36	17.39	17.45		
10	256QAM	25	25	17.38	17.47	17.40	17.43		
10	256QAM	50	0	17.27	17.35	17.45	17.35		
Channel				55265	55810	56170	56715	Tune-up limit (dBm)	MPR (dB)
Frequency (MHz)				3552.5	3607	3643	3697.5		
5	QPSK	1	0	17.75	17.52	17.88	17.73	18.8	0
5	QPSK	1	12	17.98	17.80	18.27	17.99		
5	QPSK	1	24	17.84	17.78	18.15	17.95		
5	QPSK	12	0	17.86	17.79	18.14	17.91	18.8	0
5	QPSK	12	7	18.12	17.92	18.29	18.21		
5	QPSK	12	13	18.09	17.91	18.26	18.12		
5	QPSK	25	0	18.08	17.90	18.29	18.06		
5	16QAM	1	0	17.94	17.73	18.11	17.90	18.8	0
5	16QAM	1	12	18.26	18.22	18.24	18.22		
5	16QAM	1	24	18.11	17.94	18.35	18.19		
5	16QAM	12	0	17.90	17.80	18.01	17.91	18.8	0
5	16QAM	12	7	18.08	17.85	18.24	18.17		
5	16QAM	12	13	17.96	17.88	18.18	18.03		
5	16QAM	25	0	18.01	17.81	17.93	18.04		
5	64QAM	1	0	18.04	17.80	18.14	17.96	18.8	0
5	64QAM	1	12	18.33	18.27	18.28	18.26		
5	64QAM	1	24	18.14	17.98	18.16	18.20		

5	64QAM	12	0	18.02	17.85	18.27	18.03	18.8	0
5	64QAM	12	7	18.19	18.06	18.22	18.31		
5	64QAM	12	13	18.14	17.94	18.17	18.23		
5	64QAM	25	0	18.11	17.96	18.33	18.13		
5	256QAM	1	0	17.03	17.44	17.40	17.24	18.8	0
5	256QAM	1	12	17.28	17.32	17.24	17.37		
5	256QAM	1	24	17.07	17.23	17.31	17.18		
5	256QAM	12	0	17.30	17.35	17.31	17.39	18.8	0
5	256QAM	12	7	17.53	17.28	17.36	17.40		
5	256QAM	12	13	17.30	17.38	17.31	17.33		
5	256QAM	25	0	17.17	17.34	17.36	17.27		

LAT Reduced Power Mode for Hotspot On

<LTE Band 38>

BW [MHz]	Modulation	RB Size	RB Offset	Power Low Ch. / Freq.	Power Middle Ch. / Freq.	Power High Ch. / Freq.	Tune-up limit (dBm)	MPR (dB)
Channel				37850	38000	38150		
Frequency (MHz)				2580	2595	2610		
20	QPSK	1	0	20.18	20.19	20.16	20.8	0
20	QPSK	1	49	20.32	20.28	20.24		
20	QPSK	1	99	20.38	20.34	20.20		
20	QPSK	50	0	20.15	20.14	20.09	20.8	0
20	QPSK	50	24	20.29	20.16	20.26		
20	QPSK	50	50	20.22	20.18	20.20		
20	QPSK	100	0	20.21	20.19	20.02		
20	16QAM	1	0	20.32	20.21	20.21	20.8	0
20	16QAM	1	49	20.31	20.30	20.27		
20	16QAM	1	99	20.37	20.34	20.30		
20	16QAM	50	0	20.20	20.11	19.93	20.8	0
20	16QAM	50	24	20.34	20.18	20.21		
20	16QAM	50	50	20.27	20.17	20.06		
20	16QAM	100	0	20.23	20.07	20.03		
20	64QAM	1	0	20.14	20.16	20.22	20.8	0
20	64QAM	1	49	20.35	20.21	20.19		
20	64QAM	1	99	20.20	20.07	20.06		
20	64QAM	50	0	20.00	19.93	19.86	20.8	0
20	64QAM	50	24	20.12	19.99	19.89		
20	64QAM	50	50	20.14	19.87	19.86		
20	64QAM	100	0	20.01	19.91	19.96		
20	256QAM	1	0	19.38	19.39	19.36	18.8	0
20	256QAM	1	49	19.39	19.40	19.34		
20	256QAM	1	99	19.41	19.40	19.40		
20	256QAM	50	0	19.35	19.34	19.29	18.8	0
20	256QAM	50	24	19.42	19.36	19.36		
20	256QAM	50	50	19.42	19.38	19.40		
20	256QAM	100	0	19.41	19.39	19.22		
Channel				37825	38000	38175	Tune-up limit (dBm)	MPR (dB)
Frequency (MHz)				2577.5	2595	2612.5		
15	QPSK	1	0	20.09	20.11	20.13	20.8	0
15	QPSK	1	37	20.16	20.02	20.04		
15	QPSK	1	74	20.24	20.02	20.03		
15	QPSK	36	0	20.16	19.94	20.15	20.8	0
15	QPSK	36	12	20.25	20.07	20.15		
15	QPSK	36	25	20.25	20.05	20.04		
15	QPSK	75	0	20.24	20.05	20.11		
15	16QAM	1	0	20.19	20.35	20.27	20.8	0
15	16QAM	1	37	20.26	20.36	20.23		
15	16QAM	1	74	20.25	20.28	20.27		
15	16QAM	36	0	19.83	19.76	19.90	20.8	0
15	16QAM	36	20	19.99	19.94	19.91		
15	16QAM	36	39	19.94	19.86	19.87		
15	16QAM	75	0	19.97	19.85	19.89		
15	64QAM	1	0	20.02	19.87	20.04	20.8	0
15	64QAM	1	37	19.92	19.99	20.01		
15	64QAM	1	74	19.90	19.85	20.02		
15	64QAM	36	0	19.77	19.65	19.71	20.8	0
15	64QAM	36	20	19.81	19.70	19.83		
15	64QAM	36	39	19.89	19.68	19.67		

15	64QAM	75	0	19.85	19.67	19.74		
15	256QAM	1	0	19.37	19.32	19.26	18.8	0
15	256QAM	1	37	19.36	19.36	19.25		
15	256QAM	1	74	19.33	19.40	19.40		
15	256QAM	36	0	19.33	19.29	19.19	18.8	0
15	256QAM	36	20	19.38	19.31	19.30		
15	256QAM	36	39	19.38	19.31	19.39		
15	256QAM	75	0	19.40	19.39	19.17		
Channel				37800	38000	38200	Tune-up limit (dBm)	MPR (dB)
Frequency (MHz)				2575	2595	2615		
10	QPSK	1	0	19.82	19.97	19.99	20.8	0
10	QPSK	1	25	20.15	20.03	20.02		
10	QPSK	1	49	20.09	20.07	20.04		
10	QPSK	25	0	19.97	19.75	19.86	20.8	0
10	QPSK	25	12	20.10	19.85	19.99		
10	QPSK	25	25	20.05	19.84	19.87		
10	QPSK	50	0	20.01	19.84	19.88		
10	16QAM	1	0	19.84	19.98	20.18	20.8	0
10	16QAM	1	25	20.23	20.04	20.08		
10	16QAM	1	49	19.89	20.13	20.19		
10	16QAM	25	0	19.65	19.66	19.75	20.8	0
10	16QAM	25	12	19.92	19.64	19.85		
10	16QAM	25	25	19.75	19.69	19.71		
10	16QAM	50	0	19.85	19.62	19.68		
10	64QAM	1	0	19.48	19.72	19.78	20.8	0
10	64QAM	1	25	19.88	19.66	19.75		
10	64QAM	1	49	19.63	19.76	19.81		
10	64QAM	25	0	19.62	19.39	19.59	20.8	0
10	64QAM	25	12	19.79	19.51	19.64		
10	64QAM	25	25	19.60	19.64	19.51		
10	64QAM	50	0	19.62	19.50	19.48		
10	256QAM	1	0	19.37	19.31	19.23	18.8	0
10	256QAM	1	25	19.32	19.30	19.23		
10	256QAM	1	49	19.33	19.33	19.36		
10	256QAM	25	0	19.32	19.22	19.19	18.8	0
10	256QAM	25	12	19.36	19.31	19.30		
10	256QAM	25	25	19.34	19.31	19.29		
10	256QAM	50	0	19.34	19.38	19.16		
Channel				37775	38000	38225	Tune-up limit (dBm)	MPR (dB)
Frequency (MHz)				2572.5	2595	2617.5		
5	QPSK	1	0	20.18	19.86	20.05	20.8	0
5	QPSK	1	12	20.14	20.01	20.01		
5	QPSK	1	24	20.12	20.06	20.05		
5	QPSK	12	0	20.08	19.80	19.96	20.8	0
5	QPSK	12	7	20.10	19.93	19.95		
5	QPSK	12	13	20.06	19.94	20.00		
5	QPSK	25	0	20.03	19.84	19.92		
5	16QAM	1	0	20.18	19.93	20.02	20.8	0
5	16QAM	1	12	20.18	19.97	20.12		
5	16QAM	1	24	20.17	20.08	20.12		
5	16QAM	12	0	20.03	19.88	19.96	20.8	0
5	16QAM	12	7	20.18	19.96	20.05		
5	16QAM	12	13	20.13	19.97	19.93		
5	16QAM	25	0	20.07	19.94	19.90		
5	64QAM	1	0	20.01	19.85	19.95	20.8	0
5	64QAM	1	12	20.04	19.96	19.95		

5	64QAM	1	24	20.11	19.96	19.94		
5	64QAM	12	0	20.34	20.23	20.28	20.8	0
5	64QAM	12	7	20.26	20.21	20.19		
5	64QAM	12	13	20.36	20.31	20.29		
5	64QAM	25	0	20.18	20.22	20.32		
5	256QAM	1	0	19.27	19.28	19.13	18.8	0
5	256QAM	1	12	19.32	19.26	19.19		
5	256QAM	1	24	19.24	19.27	19.34		
5	256QAM	12	0	19.29	19.17	19.19	18.8	0
5	256QAM	12	7	19.29	19.21	19.22		
5	256QAM	12	13	19.26	19.22	19.21		
5	256QAM	25	0	19.32	19.34	19.14		

<LTE Band 41_PC3>

BW [MHz]	Modulation	RB Size	RB Offset	Power Low Ch. / Freq.	Power Low Middle Ch. / Freq.	Power Middle Ch. / Freq.	Power High Middle Ch. / Freq.	Power High Ch. / Freq.	Tune-up limit (dBm)	MPR (dB)
Channel				39750	40185	40620	41055	41490		
Frequency (MHz)				2506	2549.5	2593	2636.5	2680		
20	QPSK	1	0	20.29	20.27	20.02	20.05	19.98	20.8	0
20	QPSK	1	49	20.31	20.32	20.41	20.40	20.33		
20	QPSK	1	99	20.16	20.20	19.96	20.03	20.28		
20	QPSK	50	0	20.14	20.12	20.18	20.30	20.37	20.8	0
20	QPSK	50	24	20.20	20.21	20.39	20.38	20.36		
20	QPSK	50	50	20.17	20.18	20.33	20.34	20.35		
20	QPSK	100	0	20.14	20.08	20.37	20.35	20.32		
20	16QAM	1	0	20.16	20.24	20.08	20.11	20.14	20.8	0
20	16QAM	1	49	20.26	20.28	20.34	20.31	20.37		
20	16QAM	1	99	20.21	20.37	20.11	20.16	20.33		
20	16QAM	50	0	19.79	19.79	19.85	20.04	19.99	20.8	0
20	16QAM	50	24	19.97	20.01	20.01	20.08	20.28		
20	16QAM	50	50	19.95	19.95	20.00	20.15	20.21		
20	16QAM	100	0	19.90	19.81	19.88	20.04	20.14		
20	64QAM	1	0	20.33	20.35	20.20	19.94	19.92	20.8	0
20	64QAM	1	49	20.31	20.33	20.30	20.37	20.21		
20	64QAM	1	99	20.35	20.31	20.06	19.95	19.99		
20	64QAM	50	0	20.32	20.40	20.10	20.05	19.98	20.8	0
20	64QAM	50	24	20.39	20.38	20.23	20.12	20.25		
20	64QAM	50	50	20.26	20.36	20.26	20.06	20.14		
20	64QAM	100	0	20.23	20.39	20.12	20.10	20.09		
20	256QAM	1	0	18.41	18.42	18.45	18.43	18.43	18.8	0
20	256QAM	1	49	18.26	18.30	18.06	18.13	18.38		
20	256QAM	1	99	18.24	18.22	18.28	18.40	18.41		
20	256QAM	50	0	18.30	18.31	18.42	18.42	18.46	18.8	0
20	256QAM	50	24	18.27	18.28	18.43	18.44	18.45		
20	256QAM	50	50	18.24	18.18	18.41	18.45	18.42		
20	256QAM	100	0	17.30	17.31	17.42	17.42	17.46		
Channel				39725	40173	40620	41068	41515	Tune-up limit (dBm)	MPR (dB)
Frequency (MHz)				2503.5	2548.3	2593	2637.8	2682.5		
15	QPSK	1	0	20.11	20.17	20.00	20.26	20.13	20.8	0
15	QPSK	1	37	20.11	20.36	20.20	20.36	20.25		
15	QPSK	1	74	20.15	20.18	20.01	20.14	20.30		
15	QPSK	36	0	20.19	20.33	20.18	20.25	20.30	20.8	0
15	QPSK	36	20	20.33	20.34	20.26	20.31	20.37		
15	QPSK	36	39	20.24	20.35	20.25	20.36	20.30		
15	QPSK	75	0	20.21	20.37	20.16	20.28	20.33		
15	16QAM	1	0	20.35	20.30	20.14	20.26	20.32	20.8	0
15	16QAM	1	37	20.13	20.32	20.11	20.35	20.22		
15	16QAM	1	74	20.29	20.36	20.23	20.24	20.33		
15	16QAM	36	0	19.80	20.04	19.87	20.04	20.03	20.8	0
15	16QAM	36	20	19.94	20.15	19.91	19.98	20.13		
15	16QAM	36	39	19.92	20.07	19.89	20.04	20.15		
15	16QAM	75	0	19.94	20.12	19.91	19.96	20.18		
15	64QAM	1	0	20.09	20.13	20.00	20.09	20.11	20.8	0
15	64QAM	1	37	20.09	20.35	20.20	20.31	20.38		
15	64QAM	1	74	20.08	20.21	20.00	20.03	20.25		
15	64QAM	36	0	19.85	20.06	19.94	20.02	20.09	20.8	0
15	64QAM	36	20	20.01	20.17	19.96	20.09	20.24		
15	64QAM	36	39	19.99	20.11	20.00	20.00	20.22		
15	64QAM	75	0	19.92	20.10	19.92	19.94	20.22		

15	256QAM	1	0	18.38	18.28	18.05	18.08	17.98	18.8	0
15	256QAM	1	37	18.31	18.34	18.39	18.43	18.43		
15	256QAM	1	74	18.23	18.20	18.06	18.13	18.32		
15	256QAM	36	0	18.17	18.12	18.18	18.31	18.31	18.8	0
15	256QAM	36	20	18.25	18.29	18.40	18.32	18.43		
15	256QAM	36	39	18.27	18.25	18.36	18.39	18.45		
15	256QAM	75	0	18.14	18.08	18.34	18.40	18.39		
Channel				39700	40160	40620	41080	41540	Tune-up limit (dBm)	MPR (dB)
Frequency (MHz)				2501	2547	2593	2639	2685		
10	QPSK	1	0	20.01	20.09	19.78	20.04	20.27	20.8	0
10	QPSK	1	25	20.09	20.29	20.18	20.22	20.36		
10	QPSK	1	49	20.23	20.19	19.83	19.86	20.07		
10	QPSK	25	0	20.17	20.07	19.94	20.05	20.14	20.8	0
10	QPSK	25	12	20.04	20.29	19.95	20.14	20.25		
10	QPSK	25	25	19.98	20.15	19.97	20.05	20.17		
10	QPSK	50	0	19.90	20.19	20.01	19.84	20.18		
10	16QAM	1	0	20.07	20.16	19.99	19.96	20.13	20.8	0
10	16QAM	1	25	20.01	20.19	20.13	20.05	20.27		
10	16QAM	1	49	20.01	20.00	19.97	19.94	19.99		
10	16QAM	25	0	20.08	20.04	19.97	19.96	20.12	20.8	0
10	16QAM	25	12	19.99	20.20	19.96	19.96	20.19		
10	16QAM	25	25	20.40	20.07	19.97	20.07	20.04		
10	16QAM	50	0	20.28	20.13	19.90	20.06	20.02		
10	64QAM	1	0	20.15	19.95	19.91	20.13	20.10	20.8	0
10	64QAM	1	25	20.04	20.30	20.33	20.25	20.36		
10	64QAM	1	49	20.00	20.16	19.73	20.08	19.92		
10	64QAM	25	0	19.91	19.95	19.68	19.79	19.88	20.8	0
10	64QAM	25	12	19.76	19.97	19.88	19.84	20.06		
10	64QAM	25	25	19.72	19.99	19.76	19.89	19.98		
10	64QAM	50	0	20.08	20.01	19.67	19.85	19.92		
10	256QAM	1	0	18.30	18.20	17.99	18.00	17.93	18.8	0
10	256QAM	1	25	18.31	18.25	18.30	18.36	18.37		
10	256QAM	1	49	18.14	18.12	18.05	18.10	18.27		
10	256QAM	25	0	18.13	18.05	18.13	18.27	18.23	18.8	0
10	256QAM	25	12	18.18	18.22	18.32	18.32	18.33		
10	256QAM	25	25	18.21	18.24	18.29	18.33	18.45		
10	256QAM	50	0	18.10	18.05	18.25	18.34	18.32		
Channel				39675	40148	40620	41093	41565	Tune-up limit (dBm)	MPR (dB)
Frequency (MHz)				2498.5	2545.8	2593	2640.30	2687.5		
5	QPSK	1	0	19.89	20.14	20.01	20.02	20.23	20.8	0
5	QPSK	1	12	19.83	20.16	20.04	20.05	20.27		
5	QPSK	1	24	19.85	20.14	19.97	20.00	20.18		
5	QPSK	12	0	20.00	20.26	20.02	20.02	20.26	20.8	0
5	QPSK	12	7	20.03	20.30	20.05	20.14	20.34		
5	QPSK	12	13	19.95	20.28	20.07	20.17	20.26		
5	QPSK	25	0	19.94	20.29	20.00	20.06	20.24		
5	16QAM	1	0	19.87	20.11	19.94	19.98	20.01	20.8	0
5	16QAM	1	12	19.75	20.13	19.85	20.34	20.12		
5	16QAM	1	24	19.91	20.15	19.93	20.03	20.11		
5	16QAM	12	0	19.94	20.28	20.09	20.11	20.28	20.8	0
5	16QAM	12	7	19.91	20.33	20.09	20.11	20.30		
5	16QAM	12	13	20.03	20.30	20.08	20.14	20.27		
5	16QAM	25	0	20.08	20.29	20.09	20.19	20.27		
5	64QAM	1	0	19.71	20.23	20.08	20.11	20.24	20.8	0
5	64QAM	1	12	19.85	20.33	20.07	20.18	20.19		
5	64QAM	1	24	20.02	20.34	20.07	20.20	20.18		

5	64QAM	12	0	19.98	20.20	19.99	20.05	20.16	20.8	0
5	64QAM	12	7	19.81	20.26	20.01	20.06	20.27		
5	64QAM	12	13	19.86	20.24	20.09	20.12	20.20		
5	64QAM	25	0	19.85	20.22	20.03	20.13	20.21		
5	256QAM	1	0	18.23	18.16	17.95	17.95	17.88	18.8	0
5	256QAM	1	12	18.21	18.24	18.20	18.28	18.31		
5	256QAM	1	24	18.04	18.06	18.00	18.03	18.18		
5	256QAM	12	0	18.06	17.97	18.03	18.23	18.13	18.8	0
5	256QAM	12	7	18.16	18.14	18.25	18.24	18.33		
5	256QAM	12	13	18.12	18.16	18.24	18.27	18.39		
5	256QAM	25	0	18.10	17.97	18.17	18.29	18.27		

<LTE Band 41_PC2>

BW [MHz]	Modulation	RB Size	RB Offset	Power Low Ch. / Freq.	Power Low Middle Ch. / Freq.	Power Middle Ch. / Freq.	Power High Middle Ch. / Freq.	Power High Ch. / Freq.	Tune-up limit (dBm)	MPR (dB)
Channel				39750	40185	40620	41055	41490		
Frequency (MHz)				2506	2549.5	2593	2636.5	2680		
20	QPSK	1	0	22.31	22.29	22.10	22.22	22.16	23.3	0
20	QPSK	1	49	22.33	22.40	22.56	22.38	22.45		
20	QPSK	1	99	22.31	22.33	22.42	22.26	22.39		
20	QPSK	50	0	22.16	22.42	22.42	22.31	22.42	23.3	0
20	QPSK	50	24	22.47	22.52	22.55	22.43	22.40		
20	QPSK	50	50	22.33	22.27	22.53	22.27	22.45		
20	QPSK	100	0	22.37	22.46	22.51	22.39	22.49		
20	16QAM	1	0	22.03	22.43	22.42	22.30	22.41	23.3	0
20	16QAM	1	49	22.34	22.36	22.48	22.05	22.08		
20	16QAM	1	99	22.29	22.35	22.51	22.30	22.02		
20	16QAM	50	0	22.09	22.19	22.14	22.26	22.30	23.3	0
20	16QAM	50	24	22.24	22.29	22.32	22.40	22.55		
20	16QAM	50	50	22.26	22.15	22.29	22.33	22.50		
20	16QAM	100	0	22.17	22.10	22.09	22.39	22.51		
20	64QAM	1	0	21.80	22.01	21.82	21.74	21.64	23.3	0
20	64QAM	1	49	22.04	22.01	22.08	22.04	22.01		
20	64QAM	1	99	22.06	22.06	22.06	21.69	21.74		
20	64QAM	50	0	22.02	22.02	22.11	22.00	21.86	23.3	0
20	64QAM	50	24	22.08	22.21	22.25	22.10	21.93		
20	64QAM	50	50	22.01	22.07	22.27	22.03	21.94		
20	64QAM	100	0	21.92	22.10	22.15	21.95	21.80		
20	256QAM	1	0	20.41	20.39	20.20	20.32	20.26	21.3	0
20	256QAM	1	49	20.43	20.50	20.53	20.48	20.47		
20	256QAM	1	99	20.41	20.43	20.52	20.36	20.49		
20	256QAM	50	0	20.26	20.52	20.52	20.41	20.52	21.3	0
20	256QAM	50	24	20.45	20.55	20.51	20.53	20.50		
20	256QAM	50	50	20.43	20.37	20.50	20.37	20.49		
20	256QAM	100	0	20.47	20.50	20.49	20.49	20.48		
Channel				39725	40173	40620	41068	41515	Tune-up limit (dBm)	MPR (dB)
Frequency (MHz)				2503.5	2548.3	2593	2637.8	2682.5		
15	QPSK	1	0	22.19	22.17	21.98	22.11	22.06	23.3	0
15	QPSK	1	37	22.22	22.28	22.46	22.26	22.35		
15	QPSK	1	74	22.19	22.23	22.30	22.15	22.29		
15	QPSK	36	0	22.05	22.31	22.32	22.19	22.32	23.3	0
15	QPSK	36	20	22.36	22.40	22.45	22.33	22.28		
15	QPSK	36	39	22.22	22.16	22.43	22.17	22.33		
15	QPSK	75	0	22.27	22.36	22.39	22.27	22.37		
15	16QAM	1	0	21.93	22.33	22.30	22.19	22.30	23.3	0
15	16QAM	1	37	22.24	22.26	22.37	21.93	21.97		
15	16QAM	1	74	22.19	22.24	22.41	22.20	21.91		
15	16QAM	36	0	21.98	22.09	22.02	22.14	22.19	23.3	0
15	16QAM	36	20	22.12	22.18	22.22	22.28	22.45		
15	16QAM	36	39	22.14	22.03	22.19	22.23	22.40		
15	16QAM	75	0	22.07	21.99	21.98	22.29	22.39		
15	64QAM	1	0	21.68	21.91	21.71	21.62	21.52	23.3	0
15	64QAM	1	37	21.94	21.90	21.96	21.94	21.90		
15	64QAM	1	74	21.94	21.96	21.95	21.57	21.62		
15	64QAM	36	0	21.90	21.91	22.00	21.89	21.75	23.3	0
15	64QAM	36	20	21.97	22.11	22.15	21.98	21.82		
15	64QAM	36	39	21.89	21.97	22.15	21.91	21.83		
15	64QAM	75	0	21.82	22.00	22.04	21.85	21.68		

15	256QAM	1	0	20.40	20.36	20.11	20.27	20.20	21.3	0
15	256QAM	1	37	20.42	20.45	20.47	20.41	20.41		
15	256QAM	1	74	20.38	20.36	20.44	20.36	20.43		
15	256QAM	36	0	20.18	20.50	20.52	20.38	20.51	21.3	0
15	256QAM	36	20	20.44	20.50	20.47	20.45	20.42		
15	256QAM	36	39	20.39	20.37	20.50	20.35	20.39		
15	256QAM	75	0	20.44	20.43	20.45	20.39	20.46		
Channel				39700	40160	40620	41080	41540	Tune-up limit (dBm)	MPR (dB)
Frequency (MHz)				2501	2547	2593	2639	2685		
10	QPSK	1	0	22.21	22.19	21.98	22.11	22.06	23.3	0
10	QPSK	1	25	22.21	22.30	22.45	22.28	22.33		
10	QPSK	1	49	22.19	22.21	22.30	22.15	22.27		
10	QPSK	25	0	22.06	22.30	22.30	22.21	22.31	23.3	0
10	QPSK	25	12	22.37	22.41	22.44	22.32	22.29		
10	QPSK	25	25	22.22	22.16	22.41	22.16	22.33		
10	QPSK	50	0	22.26	22.35	22.39	22.27	22.39		
10	16QAM	1	0	21.91	22.31	22.30	22.18	22.30	23.3	0
10	16QAM	1	25	22.23	22.26	22.36	21.95	21.97		
10	16QAM	1	49	22.18	22.23	22.41	22.18	21.92		
10	16QAM	25	0	21.97	22.08	22.04	22.16	22.18	23.3	0
10	16QAM	25	12	22.12	22.19	22.22	22.28	22.45		
10	16QAM	25	25	22.14	22.05	22.17	22.22	22.39		
10	16QAM	50	0	22.07	21.98	21.97	22.27	22.39		
10	64QAM	1	0	21.69	21.91	21.71	21.63	21.52	23.3	0
10	64QAM	1	25	21.92	21.91	21.97	21.92	21.89		
10	64QAM	1	49	21.95	21.95	21.94	21.58	21.62		
10	64QAM	25	0	21.91	21.91	21.99	21.89	21.74	23.3	0
10	64QAM	25	12	21.96	22.09	22.13	21.99	21.82		
10	64QAM	25	25	21.90	21.95	22.17	21.91	21.84		
10	64QAM	50	0	21.80	21.98	22.03	21.83	21.68		
10	256QAM	1	0	20.39	20.31	20.10	20.20	20.18	21.3	0
10	256QAM	1	25	20.40	20.40	20.38	20.35	20.38		
10	256QAM	1	49	20.30	20.27	20.36	20.27	20.38		
10	256QAM	25	0	20.12	20.41	20.50	20.37	20.41	21.3	0
10	256QAM	25	12	20.43	20.49	20.43	20.35	20.38		
10	256QAM	25	25	20.39	20.31	20.44	20.34	20.38		
10	256QAM	50	0	20.44	20.41	20.43	20.32	20.43		
Channel				39675	40148	40620	41093	41565	Tune-up limit (dBm)	MPR (dB)
Frequency (MHz)				2498.5	2545.8	2593	2640.30	2687.5		
5	QPSK	1	0	22.19	22.18	22.00	22.12	22.04	23.3	0
5	QPSK	1	12	22.23	22.28	22.45	22.26	22.33		
5	QPSK	1	24	22.21	22.23	22.32	22.16	22.29		
5	QPSK	12	0	22.06	22.32	22.31	22.20	22.32	23.3	0
5	QPSK	12	7	22.35	22.40	22.44	22.32	22.29		
5	QPSK	12	13	22.21	22.15	22.41	22.16	22.33		
5	QPSK	25	0	22.25	22.35	22.41	22.28	22.37		
5	16QAM	1	0	21.92	22.31	22.31	22.19	22.29	23.3	0
5	16QAM	1	12	22.23	22.24	22.37	21.95	21.98		
5	16QAM	1	24	22.17	22.24	22.41	22.20	21.90		
5	16QAM	12	0	21.97	22.07	22.04	22.16	22.19	23.3	0
5	16QAM	12	7	22.14	22.17	22.22	22.28	22.43		
5	16QAM	12	13	22.16	22.03	22.18	22.22	22.38		
5	16QAM	25	0	22.07	21.98	21.99	22.28	22.40		
5	64QAM	1	0	21.70	21.90	21.70	21.63	21.52	23.3	0
5	64QAM	1	12	21.93	21.91	21.98	21.92	21.89		
5	64QAM	1	24	21.94	21.94	21.94	21.58	21.63		

5	64QAM	12	0	21.91	21.92	22.01	21.90	21.75	23.3	0
5	64QAM	12	7	21.96	22.09	22.13	22.00	21.81		
5	64QAM	12	13	21.91	21.96	22.16	21.91	21.84		
5	64QAM	25	0	21.82	21.99	22.04	21.83	21.68		
5	256QAM	1	0	20.39	20.21	20.04	20.15	20.17	21.3	0
5	256QAM	1	12	20.35	20.34	20.33	20.25	20.35		
5	256QAM	1	24	20.22	20.17	20.35	20.17	20.30		
5	256QAM	12	0	20.06	20.41	20.49	20.27	20.33	21.3	0
5	256QAM	12	7	20.33	20.43	20.42	20.32	20.34		
5	256QAM	12	13	20.29	20.22	20.44	20.29	20.35		
5	256QAM	25	0	20.43	20.35	20.39	20.32	20.37		

UAT Reduced Power Mode forSensor On

<LTE Band 48>

BW [MHz]	Modulation	RB Size	RB Offset	Power Low Ch. / Freq.	Power Low Middle Ch. / Freq.	Power High Middle Ch. / Freq.	Power High Ch. / Freq.	Tune-up limit (dBm)
Channel				55340	55830	56150	56640	
Frequency (MHz)				3560	3609	3641	3690	
20	QPSK	1	0	18.83	19.20	19.16	18.95	19.8
20	QPSK	1	49	19.12	19.27	19.21	19.14	
20	QPSK	1	99	18.71	19.04	19.08	18.95	
20	QPSK	50	0	19.07	19.16	19.11	19.12	19.8
20	QPSK	50	24	19.20	19.26	19.24	19.15	
20	QPSK	50	50	19.05	19.21	19.20	19.09	
20	QPSK	100	0	19.09	19.23	19.11	19.13	
20	16QAM	1	0	18.99	18.90	18.94	18.83	19.8
20	16QAM	1	49	19.23	19.03	19.24	19.09	
20	16QAM	1	99	18.94	18.92	19.21	18.90	
20	16QAM	50	0	18.93	18.83	19.06	18.80	19.8
20	16QAM	50	24	19.06	18.93	19.22	18.92	
20	16QAM	50	50	18.85	18.87	19.25	18.87	
20	16QAM	100	0	18.96	18.92	19.13	18.83	
20	64QAM	1	0	18.97	18.85	18.96	18.96	19.8
20	64QAM	1	49	19.23	19.11	19.15	19.19	
20	64QAM	1	99	18.88	18.91	19.20	18.99	
20	64QAM	50	0	18.98	18.90	19.12	18.95	19.8
20	64QAM	50	24	19.07	18.95	19.09	19.04	
20	64QAM	50	50	18.95	18.89	19.12	19.03	
20	64QAM	100	0	19.01	18.91	19.17	18.94	
20	256QAM	1	0	17.33	17.60	17.56	17.35	18.8
20	256QAM	1	49	17.52	17.67	17.61	17.54	
20	256QAM	1	99	17.25	17.44	17.48	17.35	
20	256QAM	50	0	17.47	17.56	17.51	17.52	18.8
20	256QAM	50	24	17.60	17.66	17.64	17.55	
20	256QAM	50	50	17.45	17.61	17.60	17.49	
20	256QAM	100	0	17.49	17.63	17.51	17.53	
Channel				55315	55820	56160	56665	Tune-up limit (dBm)
Frequency (MHz)				3557.5	3608	3642	3692.5	
15	QPSK	1	0	18.80	19.17	19.14	18.94	19.8
15	QPSK	1	37	19.01	19.23	19.20	19.13	
15	QPSK	1	74	18.70	19.05	19.04	18.92	
15	QPSK	36	0	19.05	19.14	19.10	19.09	19.8
15	QPSK	36	20	19.18	19.25	19.21	19.13	
15	QPSK	36	39	19.03	19.19	19.17	19.07	
15	QPSK	75	0	19.00	19.22	19.08	19.10	
15	16QAM	1	0	18.97	18.86	18.92	18.82	19.8
15	16QAM	1	37	19.19	19.02	19.22	19.09	
15	16QAM	1	74	18.88	18.91	19.18	18.86	
15	16QAM	36	0	18.87	18.84	19.06	18.77	19.8
15	16QAM	36	20	19.03	18.90	19.23	18.91	
15	16QAM	36	39	18.81	18.83	19.22	18.85	
15	16QAM	75	0	18.92	18.88	19.10	18.81	
15	64QAM	1	0	18.96	18.85	18.94	18.96	19.8
15	64QAM	1	37	19.18	19.07	19.16	19.17	
15	64QAM	1	74	18.90	18.90	19.16	18.95	
15	64QAM	36	0	18.94	18.86	19.06	18.91	19.8
15	64QAM	36	20	19.04	18.94	19.06	19.06	
15	64QAM	36	39	18.93	18.88	19.08	18.99	

15	64QAM	75	0	18.94	18.92	19.17	18.93	
15	256QAM	1	0	17.31	17.58	17.54	17.30	18.8
15	256QAM	1	37	17.44	17.67	17.51	17.44	
15	256QAM	1	74	17.19	17.37	17.42	17.33	
15	256QAM	36	0	17.42	17.51	17.47	17.42	18.8
15	256QAM	36	20	17.52	17.63	17.59	17.51	
15	256QAM	36	39	17.38	17.53	17.54	17.47	
15	256QAM	75	0	17.44	17.53	17.42	17.50	
Channel				55290	55815	56165	56690	Tune-up limit (dBm)
Frequency (MHz)				3555	3607.5	3642.5	3695	
10	QPSK	1	0	18.81	19.15	19.15	18.93	19.8
10	QPSK	1	25	19.01	19.25	19.18	19.14	
10	QPSK	1	49	18.69	19.01	19.06	18.96	
10	QPSK	25	0	19.05	19.15	19.10	19.11	19.8
10	QPSK	25	12	19.19	19.27	19.18	19.11	
10	QPSK	25	25	19.04	19.22	19.19	19.05	
10	QPSK	50	0	18.99	19.23	19.09	19.12	
10	16QAM	1	0	19.00	18.84	18.94	18.82	19.8
10	16QAM	1	25	19.21	19.01	19.20	19.08	
10	16QAM	1	49	18.90	18.88	19.20	18.87	
10	16QAM	25	0	18.88	18.82	19.02	18.78	19.8
10	16QAM	25	12	19.05	18.91	19.20	18.92	
10	16QAM	25	25	18.85	18.84	19.19	18.82	
10	16QAM	50	0	18.93	18.89	19.11	18.82	
10	64QAM	1	0	18.95	18.82	18.91	18.95	19.8
10	64QAM	1	25	19.17	19.11	19.15	19.18	
10	64QAM	1	49	18.89	18.87	19.14	18.96	
10	64QAM	25	0	18.97	18.84	19.06	18.91	19.8
10	64QAM	25	12	19.03	18.95	19.05	19.06	
10	64QAM	25	25	18.90	18.88	19.10	19.02	
10	64QAM	50	0	18.96	18.89	19.16	18.90	
10	256QAM	1	0	17.30	17.48	17.54	17.24	18.8
10	256QAM	1	25	17.42	17.57	17.50	17.36	
10	256QAM	1	49	17.19	17.27	17.33	17.26	
10	256QAM	25	0	17.40	17.42	17.45	17.35	18.8
10	256QAM	25	12	17.48	17.53	17.51	17.51	
10	256QAM	25	25	17.33	17.44	17.48	17.40	
10	256QAM	50	0	17.42	17.52	17.38	17.48	
Channel				55265	55810	56170	56715	Tune-up limit (dBm)
Frequency (MHz)				3552.5	3607	3643	3697.5	
5	QPSK	1	0	18.81	19.17	19.13	18.93	19.8
5	QPSK	1	12	19.00	19.26	19.16	19.12	
5	QPSK	1	24	18.69	19.03	19.04	18.96	
5	QPSK	12	0	19.03	19.14	19.12	19.14	19.8
5	QPSK	12	7	19.18	19.24	19.20	19.12	
5	QPSK	12	13	19.05	19.19	19.18	19.09	
5	QPSK	25	0	18.99	19.21	19.07	19.09	
5	16QAM	1	0	18.97	18.87	18.92	18.81	19.8
5	16QAM	1	12	19.20	18.98	19.23	19.07	
5	16QAM	1	24	18.91	18.93	19.21	18.87	
5	16QAM	12	0	18.91	18.83	19.06	18.76	19.8
5	16QAM	12	7	19.06	18.91	19.19	18.93	
5	16QAM	12	13	18.83	18.82	19.18	18.86	
5	16QAM	25	0	18.93	18.91	19.11	18.80	
5	64QAM	1	0	18.93	18.82	18.91	18.93	19.8
5	64QAM	1	12	19.19	19.09	19.10	19.18	

5	64QAM	1	24	18.88	18.88	19.15	18.98	
5	64QAM	12	0	18.96	18.86	19.09	18.92	19.8
5	64QAM	12	7	19.02	18.94	19.03	19.01	
5	64QAM	12	13	18.95	18.89	19.08	19.04	
5	64QAM	25	0	18.98	18.93	19.16	18.94	
5	256QAM	1	0	17.26	17.47	17.45	17.17	18.8
5	256QAM	1	12	17.38	17.49	17.50	17.27	
5	256QAM	1	24	17.14	17.19	17.29	17.21	
5	256QAM	12	0	17.38	17.34	17.43	17.25	18.8
5	256QAM	12	7	17.47	17.51	17.50	17.50	
5	256QAM	12	13	17.27	17.37	17.45	17.34	
5	256QAM	25	0	17.32	17.49	17.34	17.41	

<LTE Carrier Aggregation combinations>

General Note:

1. This device supports Carrier Aggregation on downlink for inter and intra band and uplink CA. For the device supports combination bands and configurations are according to 3GPP.
2. In applying the existing power measurement procedure of KDB 941225 D05A for DL CA SAR test exclusion, only the subset with the largest number of combinations of the frequency band and CCs in each row need consideration, and that configurations require power measurement should be highlighted in the below table.
3. Only LTE Band 29A is limited to Scell.

2CC Downlink Carrier Aggregation					3CC Downlink Carrier Aggregation				
Number	Combination	4X4 MIMO	Restriction	Covered by Measurement Superset	Number	Combination	4X4 MIMO	Restriction	Covered by Measurement Superset
1	CA_2A-4A	2A,4A,2A-4A		3CC-7	1	CA_2A-2A-12A	2A, 2A-2A		4CC-6
2	CA_2A-5A	2A		3CC-14	2	CA_2A-2A-13A	2A,2A-2A		4CC-7
3	CA_2A-7A	2A,7A		3CC-26	3	CA_2A-2A-4A	2A,4A,2A-2A,2A-4A,2A-2A-4A		4CC-12
4	CA_2A-12A	2A		3CC-17	4	CA_2A-2A-5A	2A,2A-2A		4CC-9
5	CA_2A-13A	2A		3CC-18	5	CA_2A-2A-66A	2A,66A, 2A-2A,2A-66A,2A-2A-66A		4CC-10
6	CA_2A-29A	2A	B29 SCC Only	3CC-19	6	CA_2A-2A-71A	2A, 2A-2A		4CC-12
7	CA_2A-30A	2A		3CC-14	7	CA_2A-4A-12A	2A,4A,2A-4A		4CC-25
8	CA_2A-46A	2A	B46 SCC Only	3CC-21	8	CA_2A-4A-13A	2A,4A,2A-4A		
9	CA_2A-48A	2A		3CC-22	9	CA_2A-4A-29A	2A,4A,2A-4A		
10	CA_2A-66A	2A,66A,2A-66A		3CC-24	10	CA_2A-4A-4A	2A,4A,2A-4A,4A-4A,2A-4A-4A		
11	CA_2A-71A	2A		3CC-25	11	CA_2A-4A-5A	2A,4A,2A-4A		
12	CA_4A-5A	4A		3CC-37	12	CA_2A-4A-71A	2A,4A,2A-4A		4CC-12
13	CA_4A-7A	4A,7A		3CC-38	13	CA_2A-4A-7A	2A,4A,7A		
14	CA_4A-12A	4A		3CC-40	14	CA_2A-5A-30A	2A		
15	CA_4A-13A	4A		3CC-33	15	CA_2A-5A-66A	2A,66A,2A-66A		4CC-20
16	CA_4A-29A	4A	B29 SCC Only	3CC-41	16	CA_2A-12A-30A	2A		
17	CA_4A-30A	4A		3CC-41	17	CA_2A-12A-66A	2A,66A,2A-66A		4CC-6
18	CA_4A-46A	4A	B46 SCC Only	3CC-42	18	CA_2A-13A-66A	2A,66A,2A-66A		4CC-5
19	CA_4A-71A	4A		3CC-35	19	CA_2A-29A-30A	2A	B29 SCC Only	
20	CA_5A-7A				20	CA_2A-46A-46A	2A	B46 SCC Only	4CC-15
21	CA_5A-30A			3CC-44	21	CA_2A-46A-66A	2A,66A,2A-66A		4CC-16
22	CA_5A-48A	48A			22	CA_2A-48A-48A	2A,48A,2A-48A,48A-48A,2A-48A-48A		
23	CA_5A-66A	66A		3CC-45	23	CA_2A-48A-66A	2A,48A,66A,2A-48A,2A-66A,48A-66A,2A-48A-66A		
24	CA_7A-12A	7A		3CC-38	24	CA_2A-66A-66A	2A,66A,2A-66A,66A-66A,2A-66A-66A		4CC-21
25	CA_7A-46A	7A	B46 SCC Only	3CC-47	25	CA_2A-66A-71A	2A,66A,2A-66A		4CC-21
26	CA_12A-30A			3CC-48	26	CA_2A-7A-7A	2A,7A		
27	CA_12A-66A	66A		3CC-49	27	CA_2A-46A-48A	2A, 48A, 2A-48A		4CC-26
28	CA_13A-66A	66A		3CC-51	28	CA_2A-46C	2A		4CC-26
29	CA_25A-26A	25A		3CC-52	29	CA_2A-48C	2A,48C,2A-48C		
30	CA_25A-41A	25A,41A,25A-41A		3CC-53	30	CA_2A-66C	2A,66C,2A-66C		4CC-2
31	CA_25A-46A	25A	B46 SCC Only	3CC-54	31	CA_2C-66A	2C,66A,2C-66A		4CC-24
32	CA_26A-41A	41A			32	CA_4A-4A-12A	4A,4A-4A		
33	CA_29A-30A		B29 SCC Only	3CC-41	33	CA_4A-4A-13A	4A,4A-4A		
34	CA_30A-66A	66A		3CC-44	34	CA_4A-4A-5A	4A,4A-4A		
35	CA_46A-66A	66A	B46 SCC Only	3CC-55	35	CA_4A-4A-71A	4A,4A-4A		
36	CA_48A-66A	66A,48A,48A-66A		3CC-56	36	CA_4A-4A-7A	4A,7A		
37	CA_66A-71A	66A		3CC-60	37	CA_4A-5A-30A	4A		
38	CA_2C	2C,2A			38	CA_4A-7A-12A	4A,7A		
39	CA_5B				39	CA_4A-7A-7A	4A,7A		
40	CA_5C				40	CA_4A-12A-30A	4A		
41	CA_7C	7C			41	CA_4A-29A-30A	4A		
42	CA_38C				42	CA_4A-46A-46A	4A		4CC-27
43	CA_41C	41C,41A		3CC-63	43	CA_4A-46C	4A		4CC-28
44	CA_48C	48C,48A		3CC-64	44	CA_5A-30A-66A	66A		

45	CA_66B	66B			45	CA_5A-66A-66A	66A,66A-66A		4CC-18
46	CA_66C	66C,66A			46	CA_5A-66C	66C		4CC-20
47	CA_2A-2A	2A,2A-2A			47	CA_7A-46C	7A		
48	CA_4A-4A	4A,4A-4A			48	CA_12A-30A-66A	66A		
49	CA_5A-5A				49	CA_12A-66A-66A	66A,66A-66A		4CC-1
50	CA_7A-7A	7A,7A-7A			50	CA_12A-66C	66C,66A		4CC-2
51	CA_25A-25A	25A,25A-25A			51	CA_13A-66A-66A	66A,66A-66A		4CC-3
52	CA_41A-41A	41A,41A-41A		3CC-65	52	CA_25A-25A-26A	25A,25A-25A		
53	CA_48A-48A	48A,48A-48A		3CC-66	53	CA_25A-41C	25A,41C,25A-41C		4CC-29
54	CA_66A-66A	66A,66A-66A		3CC-67	54	CA_25A-46C	25A		4CC-30
					55	CA_46C-66A	66A		4CC-36
					56	CA_48A-48A-66A	48A, 66A, 48A-66A, 48A-48A-66A		
					57	CA_48C-66A	B48C,B66A,B48C-66A,48A,48A-66A		
					58	CA_13A-66C	66C,66A		4CC-5
					59	CA_66A-46A-46A	66A		4CC-31
					60	CA_66A-66A-71A	66A,66A-66A		4CC-21
					61	CA_66C-71A	66C		4CC-22
					62	CA_46A-48A-66A	48A, 66A, 48A-66A		4CC-34
					63	CA_41D	41D,41A,41C		4CC-37
					64	CA_48D	48D		4CC-38
					65	CA_41A-41C	41A,41C,41A-41C		4CC-39
					66	CA_48C-48A	48A,48C,48C-48A		
					67	CA_66A-66C	66A,66C,66A-66C,66A-66A		

4CC Downlink Carrier Aggregation					5CC Downlink Carrier Aggregation				
Number	Combination	4X4 MIMO	Restriction	Covered by Measurement Superset	Number	Combination	4X4 MIMO	Restriction	Covered by Measurement Superset
1	CA_2A-12A-66A-66A	2A,66A,2A-66A,66A-66A,2A-66A-66A			1	CA_2A-2A-46D	2A,2A-2A		
2	CA_2A-12A-66C	2A,66C,2A-66C			2	CA_2A-46A-46C-66A	2A,66A,2A-66A		
3	CA_2A-13A-66A-66A	2A,66A,2A-66A,66A-66A,2A-66A-66A			3	CA_2A-46A-46D	2A		
4	CA_2A-13A-66B	2A,66B,2A-66B			4	CA_2A-46D-66A	2A,66A,2A-66A		
5	CA_2A-13A-66C	2A,66C,2A-66C			5	CA_2A-46E	2A		
6	CA_2A-2A-12A-66A	2A,66A,2A-2A,2A-66A,66A-66A			6	CA_46A-46D-66A	66A		
7	CA_2A-2A-13A-66A	2A,66A,2A-2A,2A-66A,2A-2A-66A			7	CA_46E-66A	66A		
8	CA_2A-2A-46C	2A,2A-2A		5CC-1	8	CA_48E-66A	48E,66A,48E-66A		
9	CA_2A-2A-5A-66A	2A,66A,2A-2A,2A-66A,2A-2A-66A			9	CA_4A-46A-46D	4A		
10	CA_2A-2A-66A-66A	2A,66A,2A-2A,2A-66A,2A-2A-66A,2A-66A-66A			10	CA_41C-41D	41C,41D,41C-41D		
11	CA_2A-2A-66A-71A	2A,66A,2A-2A,2A-66A,2A-2A-66A							
12	CA_2A-2A-4A-71A	2A, 4A, 2A-2A, 2A-4A, 2A-2A-4A							
13	CA_2A-2A-66C	2A, 66C, 2A-2A, 2A-66C, 2A-2A-66C							
14	CA_2A-46A-46A-66A	2A,66A,2A-66A		5CC-2					
15	CA_2A-46A-46C	2A		5CC-2					
16	CA_2A-46C-66A	2A,66A,2A-66A		5CC-4					
17	CA_2A-46D	2A		5CC-4					
18	CA_2A-5A-66A-66A	2A,66A,2A-66A,66A-66A,2A-66A-66A							
19	CA_2A-5A-66B	2A,66B,2A-66B							
20	CA_2A-5A-66C	2A,66C,2A-66C							
21	CA_2A-66A-66A-71A	2A,66A,2A-66A,66A-66A,2A-66A-66A							
22	CA_2A-66C-71A	2A,66C,2A-66C							
23	CA_2A-46A-48C	2A, 48A, 2A-48A							
24	CA_2C-66A-66A	2C,66A,2C-66A,2C-66A-66A							
25	CA_2A-2A-4A-12A	2A, 4A, 2A-2A, 2A-4A,2A-2A-4A							
26	CA_2A-46C-48A	2A, 48C, 2A-48C							
27	CA_4A-46A-46C	4A		5CC-9					
28	CA_4A-46D	4A							
29	CA_25A-41D	25A							

30	CA_25A-46D	25A							
31	CA_46A-46C-66A	66A							
32	CA_46D-66A	66A							
33	CA_46C-48A-66A	48A, 66A, 48A-66A							
34	CA_46A-48C-66A	48C, 66A, 48C-66A							
35	CA_46D-48A	48A							
36	CA_48D-66A	66A，48D-66A							
37	CA_41E	41E							
38	CA_48E	48E							
39	CA_41A-41D	41A,41A-41D		5CC-10					
40	CA_41C-41C	41C,41C-41C		5CC-10					

2CC Uplink Carrier Aggregation				
Number	Combination	4X4 MIMO	Restriction	Covered by Measurement Superset
1	41C	41C,41A		
2	48C	48C,48A		
3	66C	66C,66A		
4	2A-12A	2A		
5	2A-13A	2A		
6	4A-12A	4A		
7	4A-13A	4A		
8	12A-66A	66A		
9	13A-66A	66A		

<LTE Downlink Carrier Aggregation>

General Note:

i. According to KDB941225 D05A v01r02, Uplink maximum output power measurement with downlink carrier aggregation active should be measured, using the highest output channel measured without downlink carrier aggregation, to confirm that uplink maximum output power with downlink carrier aggregation active remains within the specified tune-up tolerance limits and not more than ¼ dB higher than the maximum output measured without downlink carrier aggregation active.

ii. Uplink maximum output power with downlink carrier aggregation active does not show more than ¼ dB higher than the maximum output power without downlink carrier aggregation active, therefore SAR evaluation with downlink carrier aggregation active can be excluded.

iii. The device supports downlink two carrier aggregation. For power measurement were control and acknowledge data is sent on uplink channels that operate identical to specifications when downlink carrier aggregation is inactive.

iv. Selected highest measured power when downlink carrier aggregation is inactive for conducted power comparison with downlink carrier aggregation is active, to confirm that when downlink carrier aggregation is active uplink maximum output power remains within the specified tune-up tolerance limits and not more than ¼ dB higher than the maximum output power measured when downlink carrier aggregation inactive.

v. For non-contiguous intra-band CA, the SCC selected to provide maximum separation from the PCC and must remain fully within the downlink transmission band.

vi. For Intra-band, contiguous CA, the downlink channels selected to perform the uplink power measurement must satisfy 3GPP channel spacing (5.4.1A of 3GPP TS 36.521 or equivalent) and channel bandwidth (5.4.2A) requirements.

$$\text{Nominal channel spacing} = \left\lfloor \frac{BW_{Channel(1)} + BW_{Channel(2)} - 0.1\left|BW_{Channel(1)} - BW_{Channel(2)}\right|}{0.6} \right\rfloor 0.3 \ \ [\text{MHz}]$$

<Two Carrier power verification>

<UAT>

Configure		CA Configuration (BCS)	PCC							SCC				Power	
			LTE Band	BW (MHz)	UL Freq. (MHz)	UL Channel	Mod.	UL# RB	UL RB Offset	LTE Band	BW (MHz)	DL Freq. (MHz)	DL Channel	With CA Tx.Power (dBm)	W/O CA Tx.Power (dBm)
Inter-Band		CA_5A-7A	5	10	829	20450	QPSK	1	49	7	20	2655	3100	22.63	22.68
		CA_5A-48A	5	10	829	20450	QPSK	1	49	48	20	3625	55990	22.58	22.68
		CA_26A-41A	26	15	831.5	26865	QPSK	1	0	41	20	2593	40620	22.80	22.81
Intra-Band	Non-Contiguous	CA_2A-2A	2	20	1880	18900	QPSK	1	0	2	5	1987.5	1175	21.08	21.09
		CA_4A-4A	4	20	1732.5	20175	QPSK	1	0	4	5	2152.5	2375	20.61	20.71
		CA_5A-5A	5	10	829	20450	QPSK	1	49	5	5	891.5	2625	22.62	22.68
		CA_7A-7A	7	20	2510	20850	QPSK	1	0	7	5	2687.5	3425	21.23	21.26
		CA_25A-25A	25	20	1880	26340	QPSK	1	0	25	5	1992.5	8665	21.14	21.23
	Contiguous	CA_2C	2	20	1880	18900	QPSK	1	0	2	20	1979.80	1098	21.09	21.09
		CA_5B	5	10	829	20450	QPSK	1	49	5	10	883.90	2549	22.66	22.68
		CA_7C	7	20	2510	20850	QPSK	1	0	7	20	2649.80	3048	21.24	21.26
		CA_38C	38	20	2580	37850	QPSK	1	49	38	20	2599.80	38048	21.32	21.32
		CA_66B	66	15	1772.5	132597	QPSK	1	49	66	5	2163.20	66968	20.54	20.60
		CA_66C	66	20	1745	132322	QPSK	1	0	66	20	2164.80	67084	20.66	20.75

<LAT>

Configure		CA Configuration (BCS)	PCC							SCC				Power	
			LTE Band	BW (MHz)	UL Freq. (MHz)	UL Channel	Mod.	UL# RB	UL RB Offset	LTE Band	BW (MHz)	DL Freq. (MHz)	DL Channel	With CA Tx.Power (dBm)	W/O CA Tx.Power (dBm)
Inter-Band		CA_5A-7A	5	10	829	20450	QPSK	1	49	7	20	2655	3100	22.89	22.97
		CA_26A-41A	26	15	831.5	26865	QPSK	1	0	41	20	2593	40620	22.97	22.99
Intra-Band	Non-Contiguous	CA_2A-2A	2	20	1880	18900	QPSK	1	0	2	5	1987.5	1175	22.99	23.07
		CA_4A-4A	4	20	1732.5	20175	QPSK	1	0	4	5	2152.5	2375	22.84	22.84
		CA_5A-5A	5	10	829	20450	QPSK	1	49	5	5	891.5	2625	22.93	22.97
		CA_7A-7A	7	20	2510	20850	QPSK	1	0	7	5	2687.5	3425	23.49	23.56
		CA_25A-25A	25	20	1880	26340	QPSK	1	0	25	5	1992.5	8665	23.19	23.23

	Contiguous	CA_2C	2	20	1880	18900	QPSK	1	0	2	20	1979.80	1098	23.07	23.07
		CA_5B	5	10	829	20450	QPSK	1	49	5	10	883.90	2549	22.89	22.97
		CA_7C	7	20	2510	20850	QPSK	1	0	7	20	2649.80	3048	23.48	23.56
		CA_38C	38	20	2580	37850	QPSK	1	49	38	20	2599.80	38048	23.45	23.46
		CA_66B	66	15	1772.5	132597	QPSK	1	49	66	5	2163.20	66968	23.01	23.01
		CA_66C	66	20	1745	132322	QPSK	1	0	66	20	2164.80	67084	22.97	23.03

<Three Carrier power verification>

<UAT>

Configure		CA Configuration (BCS)	PCC							SCC1				SCC2				Power	
			LTE Band	BW (MHz)	UL Freq. (MHz)	UL Channel	Mod.	UL# RB	UL RB Offset	LTE Band	BW (MHz)	DL Freq. (MHz)	DL Channel	LTE Band	BW (MHz)	DL Freq. (MHz)	DL Channel	With CA Tx.Power (dBm)	W/O CA Tx.Power (dBm)
Inter-Band		CA_2A-4A-13A	2	20	1880	18900	QPSK	1	0	4	20	2132.5	2175	13	10	751	5230	21.02	21.09
		CA_2A-4A-29A	2	20	1880	18900	QPSK	1	0	4	20	2132.5	2175	29	10	722.5	9715	21.00	21.09
		CA_2A-4A-4A	2	20	1880	18900	QPSK	1	0	4	20	2132.5	2175	4	5	2152.5	2375	21.09	21.09
		CA_2A-4A-5A	2	20	1880	18900	QPSK	1	0	4	20	2132.5	2175	5	10	881.5	2525	21.06	21.09
		CA_2A-4A-7A	2	20	1880	18900	QPSK	1	0	4	20	2132.5	2175	7	20	2655	3100	21.08	21.09
		CA_2A-5A-30A	2	20	1880	18900	QPSK	1	0	5	10	881.5	2525	30	10	2355	9820	21.04	21.09
		CA_2A-12A-30A	2	20	1880	18900	QPSK	1	0	12	10	737.5	5095	30	10	2355	9820	21.02	21.09
		CA_2A-29A-30A	2	20	1880	18900	QPSK	1	0	29	10	722.5	9715	30	10	2355	9820	21.08	21.09
		CA_2A-48A-48A	2	20	1880	18900	QPSK	1	0	48	20	3625	55990	48	5	3697.5	56715	21.05	21.09
		CA_2A-48A-66A	2	20	1880	18900	QPSK	1	0	48	20	3625	55990	66	20	2155	66886	21.01	21.09
		CA_2A-7A-7A	2	20	1880	18900	QPSK	1	0	7	20	2655	3100	7	5	2622.5	2775	20.99	21.09
		CA_2A-48C	2	20	1880	18900	QPSK	1	0	48	20	3625	55990	48	20	3644.8	56188	21.03	21.09
		CA_4A-4A-12A	4	20	1732.5	20175	QPSK	1	0	4	5	2152.5	2375	12	10	737.5	5095	20.71	20.71
		CA_4A-4A-13A	4	20	1732.5	20175	QPSK	1	0	4	5	2152.5	2375	13	10	751	5230	20.71	20.71
		CA_4A-4A-5A	4	20	1732.5	20175	QPSK	1	0	4	5	2152.5	2375	5	10	881.5	2525	20.62	20.71
		CA_4A-4A-71A	4	20	1732.5	20175	QPSK	1	0	4	5	2152.5	2375	71	20	637	68786	20.66	20.71
		CA_4A-4A-7A	4	20	1732.5	20175	QPSK	1	0	4	5	2152.5	2375	7	20	2655	3100	20.62	20.71
		CA_4A-5A-30A	4	20	1732.5	20175	QPSK	1	0	5	10	881.5	2525	30	10	2355	9820	20.64	20.71
		CA_4A-7A-12A	4	20	1732.5	20175	QPSK	1	0	7	20	2655	3100	12	10	737.5	5095	20.62	20.71
		CA_4A-7A-7A	4	20	1732.5	20175	QPSK	1	0	7	20	2655	3100	7	5	2622.5	2775	20.61	20.71
		CA_4A-12A-30A	4	20	1732.5	20175	QPSK	1	0	12	10	737.5	5095	30	10	2355	9820	20.65	20.71
		CA_4A-29A-30A	4	20	1732.5	20175	QPSK	1	0	29	10	722.5	9715	30	10	2355	9820	20.68	20.71
		CA_5A-30A-66A	5	10	829	20450	QPSK	1	49	30	10	2355	9820	66	20	2155	66886	22.60	22.68
		CA_7A-46C	7	20	2510	20850	QPSK	1	0	46	20	5537.5	50665	46	20	5557.3	50863	21.20	21.26
		CA_12A-30A-66A	12	10	707.5	23095	QPSK	1	25	30	10	2355	9820	66	20	2155	66886	22.97	22.98
		CA_25A-25A-26A	25	20	1880	26340	QPSK	1	0	25	5	1992.5	8665	26	15	876.5	8865	21.18	21.23
		CA_48A-48A-66A	48	20	3675	56490	QPSK	1	49	48	5	3697.5	56715	66	20	2155	66886	22.55	22.56
		CA_48C-66A	48	20	3660	56340	QPSK	1	49	48	20	3679.8	56538	66	20	2155	66886	22.51	22.56
Intra-Band	Contiguous	CA_48C-48A	48	20	3660	56340	QPSK	1	49	48	20	3679.8	56538	48	5	3697.5	56715	22.51	22.56
		CA_66A-66C	66	20	1745	132322	QPSK	1	0	66	5	2197.5	67311	66	20	2185.8	67428	20.75	20.75

<LAT>

Configure		CA Configuration (BCS)	PCC							SCC1				SCC2				Power	
			LTE Band	BW (MHz)	UL Freq. (MHz)	UL Channel	Mod.	UL# RB	UL RB Offset	LTE Band	BW (MHz)	DL Freq. (MHz)	DL Channel	LTE Band	BW (MHz)	DL Freq. (MHz)	DL Channel	With CA Tx.Power (dBm)	W/O CA Tx.Power (dBm)
Inter-Band		CA_2A-4A-13A	2	20	1880	18900	QPSK	1	0	4	20	2132.5	2175	13	10	751	5230	22.98	23.07
		CA_2A-4A-29A	2	20	1880	18900	QPSK	1	0	4	20	2132.5	2175	29	10	722.5	9715	22.98	23.07
		CA_2A-4A-4A	2	20	1880	18900	QPSK	1	0	4	20	2132.5	2175	4	5	2152.5	2375	23.02	23.07
		CA_2A-4A-5A	2	20	1880	18900	QPSK	1	0	4	20	2132.5	2175	5	10	881.5	2525	23.04	23.07
		CA_2A-4A-7A	2	20	1880	18900	QPSK	1	0	4	20	2132.5	2175	7	20	2655	3100	23.02	23.07
		CA_2A-5A-30A	2	20	1880	18900	QPSK	1	0	5	10	881.5	2525	30	10	2355	9820	23.04	23.07
		CA_2A-12A-30A	2	20	1880	18900	QPSK	1	0	12	10	737.5	5095	30	10	2355	9820	23.06	23.07
		CA_2A-29A-30A	2	20	1880	18900	QPSK	1	0	29	10	722.5	9715	30	10	2355	9820	23.02	23.07
		CA_2A-7A-7A	2	20	1880	18900	QPSK	1	0	7	20	2655	3100	7	5	2622.5	2775	23.05	23.07
		CA_4A-4A-12A	4	20	1732.5	20175	QPSK	1	0	4	5	2152.5	2375	12	10	737.5	5095	22.80	22.84
		CA_4A-4A-13A	4	20	1732.5	20175	QPSK	1	0	4	5	2152.5	2375	13	10	751	5230	22.83	22.84
		CA_4A-4A-5A	4	20	1732.5	20175	QPSK	1	0	4	5	2152.5	2375	5	10	881.5	2525	22.81	22.84
		CA_4A-4A-71A	4	20	1732.5	20175	QPSK	1	0	4	5	2152.5	2375	71	20	637	68786	22.78	22.84
		CA_4A-4A-7A	4	20	1732.5	20175	QPSK	1	0	4	5	2152.5	2375	7	20	2655	3100	22.75	22.84
		CA_4A-5A-30A	4	20	1732.5	20175	QPSK	1	0	5	10	881.5	2525	30	10	2355	9820	22.74	22.84
		CA_4A-7A-12A	4	20	1732.5	20175	QPSK	1	0	7	20	2655	3100	12	10	737.5	5095	22.78	22.84
		CA_4A-7A-7A	4	20	1732.5	20175	QPSK	1	0	7	20	2655	3100	7	5	2622.5	2775	22.84	22.84
		CA_4A-12A-30A	4	20	1732.5	20175	QPSK	1	0	12	10	737.5	5095	30	10	2355	9820	22.77	22.84
		CA_4A-29A-30A	4	20	1732.5	20175	QPSK	1	0	29	10	722.5	9715	30	10	2355	9820	22.84	22.84
		CA_5A-30A-66A	5	10	829	20450	QPSK	1	49	30	10	2355	9820	66	20	2155	66886	22.88	22.97
		CA_7A-46C	7	20	2510	20850	QPSK	1	0	46	20	5537.5	50665	46	20	5557.3	50863	23.48	23.56
		CA_12A-30A-66A	12	10	707.5	23095	QPSK	1	25	30	10	2355	9820	66	20	2155	66886	22.88	22.94
		CA_25A-25A-26A	25	20	1880	26340	QPSK	1	0	25	5	1992.5	8665	26	15	876.5	8865	23.17	23.23
Intra-Band	Contiguous	CA_66A-66C	66	20	1745	132322	QPSK	1	0	66	5	2197.5	67311	66	20	2185.8	67428	22.98	23.03

<Four Carrier power verification>

<UAT>

Configure		CA Configuration (BCS)	PCC							SCC1				SCC2				SCC3				Power	
			LTE Band	BW (MHz)	UL Freq. (MHz)	UL Channel	Mod.	UL# RB	UL RB Offset	LTE Band	BW (MHz)	DL Freq. (MHz)	DL Channel	LTE Band	BW (MHz)	DL Freq. (MHz)	DL Channel	LTE Band	BW (MHz)	DL Freq. (MHz)	DL Channel	With CA Tx.Power (dBm)	W/O CA Tx.Power (dBm)
Inter-Band		CA_2A-12A-66A-66A	2	20	1880	18900	QPSK	1	0	12	10	737.5	5095	66	20	2155	66886	66	5	2197.5	67311	21.01	21.09
		CA_2A-12A-66C	2	20	1880	18900	QPSK	1	0	12	10	737.5	5095	66	20	2155	66886	66	20	2174.8	67084	21.07	21.09
		CA_2A-13A-66A-66A	2	20	1880	18900	QPSK	1	0	13	10	751	5230	66	20	2155	66886	66	5	2197.5	67311	21.04	21.09
		CA_2A-13A-66B	2	20	1880	18900	QPSK	1	0	13	10	751	5230	66	15	2155	66886	66	5	2164.3	66979	21.01	21.09
		CA_2A-13A-66C	2	20	1880	18900	QPSK	1	0	13	10	751	5230	66	20	2155	66886	66	20	2174.8	67084	21.01	21.09
		CA_2A-2A-12A-66A	2	20	1880	18900	QPSK	1	0	2	5	1987.5	1175	12	10	737.5	5095	66	20	2155	66886	21.03	21.09
		CA_2A-2A-13A-66A	2	20	1880	18900	QPSK	1	0	2	5	1987.5	1175	13	10	751	5230	66	20	2155	66886	21.08	21.09
		CA_2A-2A-5A-66A	2	20	1880	18900	QPSK	1	0	2	5	1987.5	1175	5	10	881.5	2525	66	20	2155	66886	21.00	21.09
		CA_2A-2A-66A-66A	2	20	1880	18900	QPSK	1	0	2	5	1987.5	1175	66	20	2155	66886	66	5	2197.5	67311	20.99	21.09
		CA_2A-2A-66A-71A	2	20	1880	18900	QPSK	1	0	2	5	1987.5	1175	66	20	2155	66886	71	20	637	68786	21.06	21.09
		CA_2A-2A-4A-71A	2	20	1880	18900	QPSK	1	0	2	5	1987.5	1175	4	20	2132.5	2175	71	20	637	68786	21.08	21.09
		CA_2A-2A-66C	2	20	1880	18900	QPSK	1	0	2	5	1987.5	1175	66	20	2155	66886	66	20	2174.8	67084	21.06	21.09
		CA_2A-5A-66A-66A	2	20	1880	18900	QPSK	1	0	5	10	881.5	2525	66	20	2155	66886	66	5	2197.5	67311	21.00	21.09
		CA_2A-5A-66B	2	20	1880	18900	QPSK	1	0	5	10	881.5	2525	66	15	2155	66886	66	5	2164.3	66979	21.07	21.09
		CA_2A-5A-66C	2	20	1880	18900	QPSK	1	0	5	10	881.5	2525	66	20	2155	66886	66	20	2174.8	67084	21.09	21.09
		CA_2A-66A-66A-71A	2	20	1880	18900	QPSK	1	0	66	20	2155	66886	66	5	2197.5	67311	71	20	637	68786	21.05	21.09
		CA_2A-66C-71A	2	20	1880	18900	QPSK	1	0	66	20	2155	66886	66	20	2174.8	67084	71	20	637	68786	21.00	21.09
		CA_2A-46A-48C	2	20	1880	18900	QPSK	1	0	46	20	5537.5	50665	48	20	3660	56340	48	20	3679.8	56538	21.06	21.09
		CA_2C-66A-66A	2	20	1880	18900	QPSK	1	0	2	20	1979.8	1098	66	20	2155	66886	66	5	2197.5	67311	21.00	21.09
		CA_2A-2A-4A-12A	2	20	1880	18900	QPSK	1	0	2	5	1960	900	4	20	2132.5	2175	12	10	737.5	5095	21.07	21.09
		CA_2A-46C-48A	2	20	1880	18900	QPSK	1	0	46	20	5537.5	50665	46	20	5557.3	50863	48	20	3660	56340	21.06	21.09
		CA_4A-46D	4	20	1732.5	20175	QPSK	1	0	46	20	5537.5	50665	46	20	5557.3	50863	46	20	5577.1	51061	20.68	20.71
		CA_25A-41D	25	20	1880	26340	QPSK	1	0	41	20	2593	40620	41	20	2612.8	40818	41	20	2632.6	41016	21.20	21.23
		CA_25A-46D	25	20	1880	26340	QPSK	1	0	46	20	5537.5	50665	46	20	5557.3	50863	46	20	5577.1	51061	21.14	21.23
		CA_46A-46C-66A	66	20	1745	132322	QPSK	1	0	46	20	5537.5	50665	46	20	5160	46890	46	20	5179.8	47088	20.74	20.75
		CA_46D-66A	66	20	1745	132322	QPSK	1	0	46	20	5537.5	50665	46	20	5557.3	50863	46	20	5577.1	51061	20.73	20.75
		CA_46C-48A-66A	66	20	1745	132322	QPSK	1	0	46	20	5537.5	50665	46	20	5557.3	50863	48	20	3660	56340	20.70	20.75
		CA_46A-48C-66A	66	20	1745	132322	QPSK	1	0	46	20	5537.5	50665	48	20	3660	56340	48	20	3679.8	56538	20.72	20.75
		CA_46D-48A	48	20	3675	56490	QPSK	1	49	46	20	5537.5	50665	46	20	5557.3	50863	46	20	5577.1	51061	22.51	22.56
		CA_48D-66A	66	20	1745	132322	QPSK	1	0	48	20	55340	3560	48	20	55359.8	3758	48	20	55379.6	3956	20.73	20.75
Intra-Band	Contiguous	CA_41E	41	20	2593	40620	QPSK	1	49	41	20	2612.80	40818	41	20	2632.60	41016	41	20	2652.40	41214	21.37	21.47
		CA_48E	48	20	3609	55830	QPSK	1	49	48	20	3628.80	56028	48	20	3648.60	56226	48	20	3668.40	56424	22.46	22.56

<LAT>

Configure		CA Configuration (BCS)	PCC							SCC1				SCC2				SCC3				Power	
			LTE Band	BW (MHz)	UL Freq. (MHz)	UL Channel	Mod.	UL# RB	UL RB Offset	LTE Band	BW (MHz)	DL Freq. (MHz)	DL Channel	LTE Band	BW (MHz)	DL Freq. (MHz)	DL Channel	LTE Band	BW (MHz)	DL Freq. (MHz)	DL Channel	With CA Tx.Power (dBm)	W/O CA Tx.Power (dBm)
Inter-Band		CA_2A-12A-66A-66A	2	20	1880	18900	QPSK	1	0	12	10	737.5	5095	66	20	2155	66886	66	5	2197.5	67311	23.00	23.07
		CA_2A-12A-66C	2	20	1880	18900	QPSK	1	0	12	10	737.5	5095	66	20	2155	66886	66	20	2174.8	67084	23.02	23.07
		CA_2A-13A-66A-66A	2	20	1880	18900	QPSK	1	0	13	10	751	5230	66	20	2155	66886	66	5	2197.5	67311	23.00	23.07
		CA_2A-13A-66B	2	20	1880	18900	QPSK	1	0	13	10	751	5230	66	15	2155	66886	66	5	2164.3	66979	23.03	23.07
		CA_2A-13A-66C	2	20	1880	18900	QPSK	1	0	13	10	751	5230	66	20	2155	66886	66	20	2174.8	67084	22.98	23.07
		CA_2A-2A-12A-66A	2	20	1880	18900	QPSK	1	0	2	5	1987.5	1175	12	10	737.5	5095	66	20	2155	66886	22.99	23.07
		CA_2A-2A-13A-66A	2	20	1880	18900	QPSK	1	0	2	5	1987.5	1175	13	10	751	5230	66	20	2155	66886	23.02	23.07
		CA_2A-2A-5A-66A	2	20	1880	18900	QPSK	1	0	2	5	1987.5	1175	5	10	881.5	2525	66	20	2155	66886	23.01	23.07
		CA_2A-2A-66A-66A	2	20	1880	18900	QPSK	1	0	2	5	1987.5	1175	66	20	2155	66886	66	5	2197.5	67311	22.98	23.07
		CA_2A-2A-66A-71A	2	20	1880	18900	QPSK	1	0	2	5	1987.5	1175	66	20	2155	66886	71	20	637	68786	22.97	23.07
		CA_2A-2A-4A-71A	2	20	1880	18900	QPSK	1	0	2	5	1987.5	1175	4	20	2132.5	2175	71	20	637	68786	23.01	23.07
		CA_2A-2A-66C	2	20	1880	18900	QPSK	1	0	2	5	1987.5	1175	66	20	2155	66886	66	20	2174.8	67084	23.05	23.07
		CA_2A-5A-66A-66A	2	20	1880	18900	QPSK	1	0	5	10	881.5	2525	66	20	2155	66886	66	5	2197.5	67311	23.01	23.07
		CA_2A-5A-66B	2	20	1880	18900	QPSK	1	0	5	10	881.5	2525	66	15	2155	66886	66	5	2164.3	66979	22.98	23.07
		CA_2A-5A-66C	2	20	1880	18900	QPSK	1	0	5	10	881.5	2525	66	20	2155	66886	66	20	2174.8	67084	23.00	23.07
		CA_2A-66A-66A-71A	2	20	1880	18900	QPSK	1	0	66	20	2155	66886	66	5	2197.5	67311	71	20	637	68786	22.98	23.07
		CA_2A-66C-71A	2	20	1880	18900	QPSK	1	0	66	20	2155	66886	66	20	2174.8	67084	71	20	637	68786	23.05	23.07
		CA_2C-66A-66A	2	20	1880	18900	QPSK	1	0	2	20	1979.8	1098	66	20	2155	66886	66	5	2197.5	67311	22.98	23.07
		CA_2A-2A-4A-12A	2	20	1880	18900	QPSK	1	0	2	5	1960	900	4	20	2132.5	2175	12	10	737.5	5095	23.01	23.07
		CA_4A-46D	4	20	1732.5	20175	QPSK	1	0	46	20	5537.5	50665	46	20	5557.3	50863	46	20	5577.1	51061	22.78	22.84
		CA_25A-41D	25	20	1880	26340	QPSK	1	0	41	20	2593	40620	41	20	2612.8	40818	41	20	2632.6	41016	23.16	23.23
		CA_25A-46D	25	20	1880	26340	QPSK	1	0	46	20	5537.5	50665	46	20	5557.3	50863	46	20	5577.1	51061	23.18	23.23
		CA_46A-46C-66A	66	20	1745	132322	QPSK	1	0	46	20	5537.5	50665	46	20	5160	46890	46	20	5179.8	47088	23.01	23.03
		CA_46D-66A	66	20	1745	132322	QPSK	1	0	46	20	5537.5	50665	46	20	5557.3	50863	46	20	5577.1	51061	22.98	23.03
Intra-Band	Contiguous	CA_41E	41	20	2593	40620	QPSK	1	49	41	20	2612.80	40818	41	20	2632.60	41016	41	20	2652.40	41214	23.58	23.60

<Five Carrier power verification>

<UAT>

Configure		CA Configuration (BCS)	PCC							SCC1				SCC2				SCC3				SCC4				Power	
			LTE Band	BW (MHz)	UL Freq. (MHz)	UL Channel	Mod.	UL# RB	UL RB Offset	LTE Band	BW (MHz)	DL Freq. (MHz)	DL Channel	LTE Band	BW (MHz)	DL Freq. (MHz)	DL Channel	LTE Band	BW (MHz)	DL Freq. (MHz)	DL Channel	LTE Band	BW (MHz)	DL Freq. (MHz)	DL Channel	With CA Tx.Power (dBm)	W/O CA Tx.Power (dBm)
		CA_2A-2A-46D	2	20	1880	18900	QPSK	1	0	2	5	1987.5	1175	46	20	5537.5	50665	46	20	5557.3	50863	46	20	5577.1	51061	21.06	21.09
		CA_2A-46A-46C-66A	2	20	1880	18900	QPSK	1	0	46	20	5537.5	50665	46	20	5160	46890	46	20	5179.8	47088	66	20	2155	66886	21.04	21.09
		CA_2A-46A-46D	2	20	1880	18900	QPSK	1	0	46	20	5537.5	50665	46	20	5160	46890	46	20	5179.8	47088	46	20	5199.6	47286	21.09	21.09
		CA_2A-46D-66A	2	20	1880	18900	QPSK	1	0	46	20	5537.5	50665	46	20	5557.3	50863	46	20	5577.1	51061	66	20	2155	66886	21.00	21.09
		CA_2A-46E	2	20	1880	18900	QPSK	1	0	46	20	5537.5	50665	46	20	5557.3	50863	46	20	5577.1	51061	46	20	5596.9	51259	21.00	21.09
		CA_46A-46D-66A	66	20	1745	132322	QPSK	1	0	46	20	5537.5	50665	46	20	5160	46890	46	20	5179.8	47088	46	20	5199.6	47286	20.71	20.75
		CA_46E-66A	66	20	1745	132322	QPSK	1	0	46	20	5537.5	50665	46	20	5557.3	50863	46	20	5577.1	51061	46	20	5596.9	51259	20.65	20.75
		CA_48E-66A	66	20	1745	132322	QPSK	1	0	48	20	3609	55830	48	20	3628.8	56028	48	20	3648.6	56226	48	20	3668.4	56424	20.68	20.75
		CA_4A-46A-46D	4	20	1732.5	20175	QPSK	1	0	46	20	5537.5	50665	46	20	5160	46890	46	20	5179.8	47088	46	20	5199.6	47286	20.67	20.71
Intra-Band	Contiguous	CA_41C-41D	41	20	2593	40620	QPSK	1	49	41	20	2612.80	40818	41	5	2502.5	39715	41	20	2514.20	39832	41	20	2534.00	40030	21.47	21.47

<LAT>

Configure		CA Configuration (BCS)	PCC							SCC1				SCC2				SCC3				SCC4				Power	
			LTE Band	BW (MHz)	UL Freq. (MHz)	UL Channel	Mod.	UL# RB	UL RB Offset	LTE Band	BW (MHz)	DL Freq. (MHz)	DL Channel	LTE Band	BW (MHz)	DL Freq. (MHz)	DL Channel	LTE Band	BW (MHz)	DL Freq. (MHz)	DL Channel	LTE Band	BW (MHz)	DL Freq. (MHz)	DL Channel	With CA Tx.Power (dBm)	W/O CA Tx.Power (dBm)
		CA_2A-2A-46D	2	20	1880	18900	QPSK	1	0	2	5	1987.5	1175	46	20	5537.5	50665	46	20	5557.3	50863	46	20	5577.1	51061	23.05	23.07
		CA_2A-46A-46C-66A	2	20	1880	18900	QPSK	1	0	46	20	5537.5	50665	46	20	5160	46890	46	20	5179.8	47088	66	20	2155	66886	23.00	23.07
		CA_2A-46A-46D	2	20	1880	18900	QPSK	1	0	46	20	5537.5	50665	46	20	5160	46890	46	20	5179.8	47088	46	20	5199.6	47286	23.03	23.07
		CA_2A-46D-66A	2	20	1880	18900	QPSK	1	0	46	20	5537.5	50665	46	20	5557.3	50863	46	20	5577.1	51061	66	20	2155	66886	22.98	23.07
		CA_2A-46E	2	20	1880	18900	QPSK	1	0	46	20	5537.5	50665	46	20	5557.3	50863	46	20	5577.1	51061	46	20	5596.9	51259	23.03	23.07
		CA_46A-46D-66A	66	20	1745	132322	QPSK	1	0	46	20	5537.5	50665	46	20	5160	46890	46	20	5179.8	47088	46	20	5199.6	47286	23.00	23.03
		CA_46E-66A	66	20	1745	132322	QPSK	1	0	46	20	5537.5	50665	46	20	5557.3	50863	46	20	5577.1	51061	46	20	5596.9	51259	22.98	23.03
		CA_4A-46A-46D	4	20	1732.5	20175	QPSK	1	0	46	20	5537.5	50665	46	20	5160	46890	46	20	5179.8	47088	46	20	5199.6	47286	22.77	22.84
Intra-Band	Contiguous	CA_41C-41D	41	20	2593	40620	QPSK	1	49	41	20	2612.80	40818	41	5	2502.5	39715	41	20	2514.20	39832	41	20	2534.00	40030	23.51	23.60

<LTE Uplink carrier aggregation>

2CC Uplink Carrier Aggregation				
Number	Combination	4X4 MIMO	Restriction	Covered by Measurement Superset
1	41C	41C,41A		
2	48C	48C,48A		
3	66C	66C,66A		

<Intra-band>

General Note:

i. The device supports intra-band uplink carrier aggregation for LTE B66/B41/B48 with a maximum of two 20MHz component carriers. For intra band contiguous carrier aggregation scenarios, 3GPP 36.101 table 6.2.2A-1 specifies that the aggregate maximum allowed output power is equivalent to the single carrier scenario. 3GPP 36.101 6.2.3A allows for several dB of MPR to be applied when not-contiguous RB allocation is implemented. The conducted power and MPR setting in this device are permanently implemented pre 3GPP requirement.

ii. According TCB workshop, the output power with uplink CA active was measured for the configuration with the highest reported SAR with single carrier for each exposure condition. The power was measured with wideband signal integration over both component carriers.

iii. Additional SAR measurement for LTE UL CA whit other DL CA combinations active were not required since the maximum output power for this configuration was not > 0.25dB higher than the maximum output power for UL CA active.

<Full power>
<UAT>

CA_66C										
Combination 20MHz+20MHz (100RB+100RB)										
PCC Channel	SCC Channel	Modulation	PCC		SCC		Total RB Size	Target MPR Level (dB)	Measured Power (dBm)	Tune up Power (dBm)
			RB Size	RB offset	RB Size	RB offset				
132072	132270	QPSK	1	0	0	0	1	0	19.99	22
132322	132124	QPSK	1	0	1	99	2	0	20.96	22
132572	132374	QPSK	1	0	1	99	2	0	20.97	22

CA_41C										
Combination 20MHz+20MHz (100RB+100RB)										
PCC Channel	SCC Channel	Modulation	PCC		SCC		Total RB Size	Target MPR Level (dB)	Measured Power (dBm)	Tune up Power (dBm)
			RB Size	RB offset	RB Size	RB offset				
39750	39948	QPSK	1	0	0	0	1	0	21.75	21.8
40185	39987	QPSK	1	0	1	99	2	0	21.62	21.8
40620	40422	QPSK	1	0	1	99	2	0	21.77	21.8
41055	40857	QPSK	1	0	1	99	2	0	21.79	21.8
41490	41292	QPSK	1	0	1	99	2	0	21.65	21.8

CA_41C_HPUE										
Combination 20MHz+20MHz (100RB+100RB)										
PCC Channel	SCC Channel	Modulation	PCC		SCC		Total RB Size	Target MPR Level (dB)	Measured Power (dBm)	Tune up Power (dBm)
			RB Size	RB offset	RB Size	RB offset				
39750	39948	QPSK	1	0	0	0	1	0	22.65	24.3
40185	39987	QPSK	1	0	1	99	2	0	22.78	24.3
40620	40422	QPSK	1	0	1	99	2	0	23.15	24.3
41055	40857	QPSK	1	0	1	99	2	0	22.93	24.3
41490	41292	QPSK	1	0	1	99	2	0	22.91	24.3

CA_48C										
Combination 20MHz+20MHz (100RB+100RB)										
PCC Channel	SCC Channel	Modulation	PCC		SCC		Total RB Size	Target MPR Level (dB)	Measured Power (dBm)	Tune up Power (dBm)
			RB Size	RB offset	RB Size	RB offset				
55340	55538	QPSK	1	0	0	0	1	0	22.50	23.8
55830	55632	QPSK	1	0	1	99	2	0	22.86	23.8
56150	55952	QPSK	1	0	1	99	2	0	22.23	23.8
56640	56442	QPSK	1	0	1	99	2	0	22.92	23.8

<LAT>

CA_66C										
Combination 20MHz+20MHz (100RB+100RB)										
PCC Channel	SCC Channel	Modulation	PCC		SCC		Total RB Size	Target MPR Level (dB)	Measured Power (dBm)	Tune up Power (dBm)
			RB Size	RB offset	RB Size	RB offset				
132072	132270	QPSK	1	0	0	0	1	0	22.74	23.8
132322	132124	QPSK	1	0	1	99	2	0	22.72	23.8
132572	132374	QPSK	1	0	1	99	2	0	22.75	23.8

CA_41C										
Combination 20MHz+20MHz (100RB+100RB)										
PCC Channel	SCC Channel	Modulation	PCC		SCC		Total RB Size	Target MPR Level (dB)	Measured Power (dBm)	Tune up Power (dBm)
			RB Size	RB offset	RB Size	RB offset				
39750	39948	QPSK	1	0	0	0	1	0	23.48	23.8
40185	39987	QPSK	1	0	1	99	2	0	23.77	23.8
40620	40422	QPSK	1	0	1	99	2	0	23.71	23.8
41055	40857	QPSK	1	0	1	99	2	0	23.76	23.8
41490	41292	QPSK	1	0	1	99	2	0	23.79	23.8

CA_41C_HPUE										
Combination 20MHz+20MHz (100RB+100RB)										
PCC Channel	SCC Channel	Modulation	PCC		SCC		Total RB Size	Target MPR Level (dB)	Measured Power (dBm)	Tune up Power (dBm)
			RB Size	RB offset	RB Size	RB offset				
39750	39948	QPSK	1	0	0	0	1	0	24.6	26.3
40185	39987	QPSK	1	0	1	99	2	0	24.83	26.3
40620	40422	QPSK	1	0	1	99	2	0	24.94	26.3
41055	40857	QPSK	1	0	1	99	2	0	24.96	26.3
41490	41292	QPSK	1	0	1	99	2	0	24.83	26.3

<Reduced Power for Next-to-Head>
<UAT>

CA_66C										
Combination 20MHz+20MHz (100RB+100RB)										
PCC Channel	SCC Channel	Modulation	PCC		SCC		Total RB Size	Target MPR Level (dB)	Measured Power (dBm)	Tune up Power (dBm)
			RB Size	RB offset	RB Size	RB offset				
132072	132270	QPSK	1	0	0	0	1	0	11.93	13
132322	132124	QPSK	1	0	1	99	2	0	12.69	13
132572	132374	QPSK	1	0	1	99	2	0	12.68	13

CA_41C										
Combination 20MHz+20MHz (100RB+100RB)										
PCC Channel	SCC Channel	Modulation	PCC		SCC		Total RB Size	Target MPR Level (dB)	Measured Power (dBm)	Tune up Power (dBm)
			RB Size	RB offset	RB Size	RB offset				
39750	39948	QPSK	1	0	0	0	1	0	16.00	17.3
40185	39987	QPSK	1	0	1	99	2	0	16.99	17.3
40620	40422	QPSK	1	0	1	99	2	0	17.29	17.3
41055	40857	QPSK	1	0	1	99	2	0	17.15	17.3
41490	41292	QPSK	1	0	1	99	2	0	17.13	17.3

CA_41C_HPUE										
Combination 20MHz+20MHz (100RB+100RB)										
PCC Channel	SCC Channel	Modulation	PCC		SCC		Total RB Size	Target MPR Level (dB)	Measured Power (dBm)	Tune up Power (dBm)
			RB Size	RB offset	RB Size	RB offset				
39750	39948	QPSK	1	0	0	0	1	0	17.22	18.3
40185	39987	QPSK	1	0	1	99	2	0	17.93	18.3
40620	40422	QPSK	1	0	1	99	2	0	18.09	18.3
41055	40857	QPSK	1	0	1	99	2	0	18.01	18.3
41490	41292	QPSK	1	0	1	99	2	0	17.98	18.3

CA_48C										
Combination 20MHz+20MHz (100RB+100RB)										
PCC Channel	SCC Channel	Modulation	PCC		SCC		Total RB Size	Target MPR Level (dB)	Measured Power (dBm)	Tune up Power (dBm)
			RB Size	RB offset	RB Size	RB offset				
55340	55538	QPSK	1	0	0	0	1	0	13.05	14.3
55830	55632	QPSK	1	0	1	99	2	0	13.91	14.3
56150	55952	QPSK	1	0	1	99	2	0	13.96	14.3
56640	56442	QPSK	1	0	1	99	2	0	12.77	14.3

<Reduced Power for Hotspot On>
<UAT>

CA_41C										
Combination 20MHz+20MHz (100RB+100RB)										
PCC Channel	SCC Channel	Modulation	PCC		SCC		Total RB Size	Target MPR Level (dB)	Measured Power (dBm)	Tune up Power (dBm)
			RB Size	RB offset	RB Size	RB offset				
39750	39948	QPSK	1	0	0	0	1	0	17.67	17.8
40185	39987	QPSK	1	0	1	99	2	0	17.63	17.8
40620	40422	QPSK	1	0	1	99	2	0	17.78	17.8
41055	40857	QPSK	1	0	1	99	2	0	17.72	17.8
41490	41292	QPSK	1	0	1	99	2	0	17.67	17.8

CA_41C_HPUE										
Combination 20MHz+20MHz (100RB+100RB)										
PCC Channel	SCC Channel	Modulation	PCC		SCC		Total RB Size	Target MPR Level (dB)	Measured Power (dBm)	Tune up Power (dBm)
			RB Size	RB offset	RB Size	RB offset				
39750	39948	QPSK	1	0	0	0	1	0	18.00	19.8
40185	39987	QPSK	1	0	1	99	2	0	18.84	19.8
40620	40422	QPSK	1	0	1	99	2	0	19.19	19.8
41055	40857	QPSK	1	0	1	99	2	0	19.07	19.8
41490	41292	QPSK	1	0	1	99	2	0	19.02	19.8

CA_48C										
Combination 20MHz+20MHz (100RB+100RB)										
PCC Channel	SCC Channel	Modulation	PCC		SCC		Total RB Size	Target MPR Level (dB)	Measured Power (dBm)	Tune up Power (dBm)
			RB Size	RB offset	RB Size	RB offset				
55340	55538	QPSK	1	0	0	0	1	0	17.65	18.8
55830	55632	QPSK	1	0	1	99	2	0	18.04	18.8
56150	55952	QPSK	1	0	1	99	2	0	18.34	18.8
56640	56442	QPSK	1	0	1	99	2	0	18.26	18.8

<LAT>

CA_66C										
Combination 20MHz+20MHz (100RB+100RB)										
PCC Channel	SCC Channel	Modulation	PCC		SCC		Total RB Size	Target MPR Level (dB)	Measured Power (dBm)	Tune up Power (dBm)
			RB Size	RB offset	RB Size	RB offset				
132072	132270	QPSK	1	0	0	0	1	0	18.84	20.8
132322	132124	QPSK	1	0	1	99	2	0	19.72	20.8
132572	132374	QPSK	1	0	1	99	2	0	19.75	20.8

CA_41C										
Combination 20MHz+20MHz (100RB+100RB)										
PCC Channel	SCC Channel	Modulation	PCC		SCC		Total RB Size	Target MPR Level (dB)	Measured Power (dBm)	Tune up Power (dBm)
			RB Size	RB offset	RB Size	RB offset				
39750	39948	QPSK	1	0	0	0	1	0	19.34	20.8
40185	39987	QPSK	1	0	1	99	2	0	20.63	20.8
40620	40422	QPSK	1	0	1	99	2	0	20.73	20.8
41055	40857	QPSK	1	0	1	99	2	0	20.69	20.8
41490	41292	QPSK	1	0	1	99	2	0	20.64	20.8

CA_41C_HPUE										
Combination 20MHz+20MHz (100RB+100RB)										
PCC Channel	SCC Channel	Modulation	PCC		SCC		Total RB Size	Target MPR Level (dB)	Measured Power (dBm)	Tune up Power (dBm)
			RB Size	RB offset	RB Size	RB offset				
39750	39948	QPSK	1	0	0	0	1	0	21.62	23.3
40185	39987	QPSK	1	0	1	99	2	0	21.86	23.3
40620	40422	QPSK	1	0	1	99	2	0	22.01	23.3
41055	40857	QPSK	1	0	1	99	2	0	22.03	23.3
41490	41292	QPSK	1	0	1	99	2	0	21.83	23.3

<Reduced Power for Sensor On>
<UAT>

CA_48C										
Combination 20MHz+20MHz (100RB+100RB)										
PCC Channel	SCC Channel	Modulation	PCC		SCC		Total RB Size	Target MPR Level (dB)	Measured Power (dBm)	Tune up Power (dBm)
			RB Size	RB offset	RB Size	RB offset				
55340	55538	QPSK	1	0	0	0	1	0	18.69	19.8
55830	55632	QPSK	1	0	1	99	2	0	19.41	19.8
56150	55952	QPSK	1	0	1	99	2	0	19.48	19.8
56640	56442	QPSK	1	0	1	99	2	0	19.48	19.8

<LAT>

CA_66C										
Combination 20MHz+20MHz (100RB+100RB)										
PCC Channel	SCC Channel	Modulation	PCC		SCC		Total RB Size	Target MPR Level (dB)	Measured Power (dBm)	Tune up Power (dBm)
			RB Size	RB offset	RB Size	RB offset				
132072	132270	QPSK	1	0	0	0	1	0	18.72	19.8
132322	132124	QPSK	1	0	1	99	2	0	19.32	19.8
132572	132374	QPSK	1	0	1	99	2	0	19.46	19.8

14. 5G NR Output Power (Unit: dBm)

General Note:

1. NR implementation of n71, n5, n66, n2, and n41 is limited to EN-DC operations only (NSA), with LTE Bands 2/5/12/13/25/26/66/41 acting as anchor bands, SAR tests for NR Bands and LTE Anchors Bands were performed separately due to limitations in SAR probe calibration factors.
2. Following 5G NR n2/n5/n66/n71 support SCS 15KHz DFT/CP-OFDM, PI/2 BPSK/QPSK/16QAM/64QAM/256QAM, Bandwidth 5M/10M/15M/20M.
3. Following 5G NR n41 support SCS 30KHz DFT/CP-OFDM, PI/2 BPSK/QPSK/16QAM/64QAM/256QAM, Bandwidth 20M/40M/50M/60M/80M/90M/100M.
4. For 5G NR test procedure was following step similar FCC KDB 941225 D05:
   a. For DFT-OFDM and CP-OFDM output power measurement reduction, according to 38.101 maximum power reduction for power class2 and 3, the CP-OFDM mode will not higher than DFT-OFDM mode, therefore, similar FCC KDB 941225 D05 procedure for other modulation output power for each RB allocation configuration is > not ½ dB higher than the same configuration in DFT-QPSK and the reported SAR for the DFT-QPSK configuration is ≤ 1.45 W/kg; CP-OFDM testing is not required.
   b. For DFT-OFDM output power measurement reduction, according to 38.101 maximum power reduction for power class2 and 3, for 16QAM/64QMA/256QAM and smaller bandwidth output power will spot check largest channel bandwidth worst RB configuration to ensure the 16QAM/64QMA/256QAM and smaller bandwidth output power will not ½ dB higher than the same configuration in the largest supported bandwidth.
   c. SAR testing start with the largest channel bandwidth and measure SAR for PI/2 BPSK with 1 RB allocation, using the RB offset and required test channel combination with the highest maximum output power for RB offsets at the upper edge, middle and lower edge of each required test channel
   d. 50% RB allocation for PI/2 BPSK SAR testing follows 1RB PI/2 BPSK allocation procedure
   e. PI/2 BPSK with 100% RB allocation, SAR is not required when the highest maximum output power for 100 % RB allocation is less than the highest maximum output power in 50% and 1 RB allocations and the highest reported SAR for 1 RB and 50% RB allocation are ≤ 0.8 W/kg. Otherwise, SAR is measured for the highest output power channel; and if the reported SAR is > 1.45 W/kg, the remaining required test channels must also be tested
   f. QPSK/16QAM/64QAM/256QAM output powers according to 3GPP MPR will not ½ dB higher than the same configuration in PI/2 BPSK, also reported SAR for the PI/2 BPSK configuration is less than 1.45 W/kg, QPSK/16QAM/64QAM/256QAM SAR testing are not required.
   g. Smaller bandwidth output power for each RB allocation configuration for this device will not ½ dB higher than the same configuration in the largest supported bandwidth, and the reported SAR for the largest supported bandwidth is ≤ 1.45 W/kg, smaller bandwidth SAR testing is not required for this device
5. Due to test setup limitations, SAR testing for NR was performed using Factory Test Mode software to establish the connection and perform SAR with 100% transmission.

<3GPP 38.101 MPR for EN-DC>

Table 6.2.2-1 Maximum power reduction (MPR) for power class 3

Modulation		MPR (dB)		
		Edge RB allocations	Outer RB allocations	Inner RB allocations
DFT-s-OFDM	Pi/2 BPSK	≤ 3.5[1]	≤ 1.2[1]	≤ 0.2[1]
		≤ 0.5[2]	≤ 0.5[2]	0[2]
	QPSK	≤ 1		0
	16 QAM	≤ 2		≤ 1
	64 QAM	≤ 2.5		
	256 QAM	≤ 4.5		
CP-OFDM	QPSK	≤ 3		≤ 1.5
	16 QAM	≤ 3		≤ 2
	64 QAM	≤ 3.5		
	256 QAM	≤ 6.5		

NOTE 1: Applicable for UE operating in TDD mode with Pi/2 BPSK modulation and UE indicates support for UE capability *powerBoosting-pi2BPSK* and if the IE *powerBoostPi2BPSK* is set to 1 and 40 % or less slots in radio frame are used for UL transmission for bands n40, n41, n77, n78 and n79. The reference power of 0 dB MPR is 26 dBm.

NOTE 2: Applicable for UE operating in FDD mode, or in TDD mode in bands other than n40, n41, n77, n78 and n79 with Pi/2 BPSK modulation and if the IE *powerBoostPi2BPSK* is set to 0 and if more than 40 % of slots in radio frame are used for UL transmission for bands n40, n41, n77, n78 and n79.

Table 6.2.2-2 Maximum power reduction (MPR) for power class 2

Modulation		MPR (dB)		
		Edge RB allocations	Outer RB allocations	Inner RB allocations
DFT-s-OFDM	Pi/2 BPSK	≤ 3.5	≤ 0.5	0
	QPSK	≤ 3.5	≤ 1	0
	16 QAM	≤ 3.5	≤ 2	≤ 1
	64 QAM	≤ 3.5	≤ 2.5	
	256 QAM	≤ 4.5		
CP-OFDM	QPSK	≤ 3.5	≤ 3	≤ 1.5
	16 QAM	≤ 3.5	≤ 3	≤ 2
	64 QAM	≤ 3.5		
	256 QAM	≤ 6.5		

<NSA mode>
<DFT-s-OFDM—EN-DC--Full Power>

<n2 – LAT>

BW [MHz]	Modulation	RB Size	RB Offset	Power Low Ch. / Freq.	Power Middle Ch. / Freq.	Power High Ch. / Freq.	Tune-up limit (dBm)	MPR (dB)
Channel				372000	376000	380000		
Frequency (MHz)				1860	1880	1900		
20	PI/2 BPSK	1	1	22.56	22.92	22.78	23.8	0
20	PI/2 BPSK	1	53	22.52	22.87	22.86		
20	PI/2 BPSK	1	104	22.47	22.83	22.85		
20	PI/2 BPSK	50	0	22.47	22.83	22.88	23.8	0
20	PI/2 BPSK	50	28	22.39	22.78	22.72		
20	PI/2 BPSK	50	56	22.42	22.79	22.75		
20	PI/2 BPSK	100	0	21.55	22.10	21.95	22.8	1
20	QPSK	1	1	22.50	22.92	22.70	23.8	0
20	QPSK	1	53	22.49	22.72	22.77		
20	QPSK	1	104	22.31	22.82	22.73		
20	QPSK	50	0	22.44	22.70	22.76	23.8	0
20	QPSK	50	28	22.32	22.69	22.52		
20	QPSK	50	56	22.29	22.75	22.66		
20	QPSK	100	0	21.44	21.91	21.85	22.8	1
20	16QAM	1	1	21.62	22.04	21.83	22.8	1
20	64QAM	1	1	20.58	20.80	20.76	21.3	2.5
20	256QAM	1	1	18.11	18.57	18.08	19.3	4.5
Channel				371500	376000	380500	Tune-up limit	MPR
Frequency (MHz)				1857.5	1880	1902.5	(dBm)	(dB)
15	QPSK	1	1	22.48	22.85	22.75	23.8	0
Channel				371000	376000	381000	Tune-up limit	MPR
Frequency (MHz)				1855	1880	1905	(dBm)	(dB)
10	QPSK	1	1	22.4	22.79	22.63	23.8	0
Channel				370500	376000	381500	Tune-up limit	MPR
Frequency (MHz)				1852.5	1880	1907.5	(dBm)	(dB)
5	QPSK	1	1	22.31	22.74	22.58	23.8	0

<n5 – LAT>

BW [MHz]	Modulation	RB Size	RB Offset	Power Low Ch. / Freq.	Power Middle Ch. / Freq.	Power High Ch. / Freq.	Tune-up limit (dBm)	MPR (dB)
Channel				166800	167300	167800		
Frequency (MHz)				834	836.5	839		
20	PI/2 BPSK	1	1	23.31	23.22	23.18	23.8	0
20	PI/2 BPSK	1	53	23.25	23.18	23.11		
20	PI/2 BPSK	1	104	23.26	23.19	23.13		
20	PI/2 BPSK	50	0	23.28	23.21	23.16	23.8	0
20	PI/2 BPSK	50	28	23.25	23.20	23.15		
20	PI/2 BPSK	50	56	23.27	23.18	23.16		
20	PI/2 BPSK	100	0	22.22	22.32	22.28	22.80	1
20	QPSK	1	1	23.19	23.03	23.06	23.8	0
20	QPSK	1	53	23.17	23.02	23.09		
20	QPSK	1	104	23.21	23.13	23.10		
20	QPSK	50	0	23.21	23.17	23.15	23.8	0
20	QPSK	50	28	23.16	23.17	22.96		
20	QPSK	50	56	23.11	23.18	22.99		
20	QPSK	100	0	22.03	22.31	22.19	22.80	1
20	16QAM	1	1	22.45	22.37	22.38	22.80	1
20	64QAM	1	1	21.60	21.52	21.50	21.30	2.5
20	256QAM	1	1	19.51	19.62	19.50	19.30	4.5
Channel				166300	167300	168300	Tune-up limit	MPR
Frequency (MHz)				831.5	836.5	841.5	(dBm)	(dB)
15	QPSK	1	1	23.24	23.17	23.13	23.80	0
Channel				165800	167300	168800	Tune-up limit	MPR
Frequency (MHz)				829	836.5	844	(dBm)	(dB)
10	QPSK	1	1	23.16	23.09	23.09	23.80	0
Channel				165300	167300	169300	Tune-up limit	MPR
Frequency (MHz)				826.5	836.5	846.5	(dBm)	(dB)
5	QPSK	1	1	23.08	22.97	22.91	23.80	0

<n66 – LAT>

BW [MHz]	Modulation	RB Size	RB Offset	Power Low Ch. / Freq.	Power Middle Ch. / Freq.	Power High Ch. / Freq.	Tune-up limit (dBm)	MPR (dB)
Channel				344000	349000	354000		
Frequency (MHz)				1720	1745	1770		
20	PI/2 BPSK	1	1	23.25	23.27	23.13	23.8	0
20	PI/2 BPSK	1	53	23.21	23.25	23.09		
20	PI/2 BPSK	1	104	23.19	23.24	23.07		
20	PI/2 BPSK	50	0	23.22	23.25	23.07	23.8	0
20	PI/2 BPSK	50	28	23.21	23.23	23.11		
20	PI/2 BPSK	50	56	23.18	23.22	23.12		
20	PI/2 BPSK	100	0	22.25	22.22	22.17	22.80	1
20	QPSK	1	1	23.10	23.22	23.08	23.8	0
20	QPSK	1	53	23.12	23.14	22.96		
20	QPSK	1	104	23.06	23.24	22.88		
20	QPSK	50	0	23.08	23.22	22.90	23.8	0
20	QPSK	50	28	23.20	23.05	23.06		
20	QPSK	50	56	23.09	23.16	23.05		
20	QPSK	100	0	22.06	22.14	22.03	22.80	1
20	16QAM	1	1	22.48	22.42	22.40	22.80	1
20	64QAM	1	1	21.04	21.08	21.08	21.30	2.5
20	256QAM	1	1	19.05	18.94	18.94	19.30	4.5
Channel				343500	349000	354500	Tune-up limit	MPR
Frequency (MHz)				1717.5	1745	1772.5	(dBm)	(dB)
15	QPSK	1	1	23.18	23.21	23.05	23.80	0
Channel				343000	349000	355000	Tune-up limit	MPR
Frequency (MHz)				1715	1745	1775	(dBm)	(dB)
10	QPSK	1	1	23.11	23.19	23.05	23.80	0
Channel				342500	349000	355500	Tune-up limit	MPR
Frequency (MHz)				1712.5	1745	1777.5	(dBm)	(dB)
5	QPSK	1	1	23.08	23.00	22.98	23.80	0

<n71 – LAT>

BW [MHz]	Modulation	RB Size	RB Offset	Power Low Ch. / Freq.	Power Middle Ch. / Freq.	Power High Ch. / Freq.	Tune-up limit (dBm)	MPR (dB)
Channel				134600	136100	137600		
Frequency (MHz)				673	680.5	688		
20	PI/2 BPSK	1	1	23.09	23.25	23.13	23.8	0
20	PI/2 BPSK	1	53	23.05	23.18	23.06		
20	PI/2 BPSK	1	104	23.05	23.22	23.05		
20	PI/2 BPSK	50	0	23.08	23.23	23.03	23.8	0
20	PI/2 BPSK	50	28	23.07	23.19	23.09		
20	PI/2 BPSK	50	56	23.01	23.17	23.07		
20	PI/2 BPSK	100	0	22.33	22.42	22.34	22.80	1
20	QPSK	1	1	22.93	23.11	22.96	23.8	0
20	QPSK	1	53	23.03	23.18	22.95		
20	QPSK	1	104	23.04	23.10	22.92		
20	QPSK	50	0	23.08	23.20	23.01	23.8	0
20	QPSK	50	28	22.95	23.09	23.04		
20	QPSK	50	56	23.00	23.01	22.93		
20	QPSK	100	0	22.16	22.27	22.20	22.80	1
20	16QAM	1	1	22.12	22.12	22.14	22.80	1
20	64QAM	1	1	21.08	20.98	20.73	21.30	2.5
20	256QAM	1	1	19.02	18.72	18.53	19.30	4.5
Channel				134100	136100	138100	Tune-up limit	MPR
Frequency (MHz)				670.5	680.5	690.5	(dBm)	(dB)
15	QPSK	1	1	23.03	23.18	23.10	23.80	0
Channel				133600	136100	138600	Tune-up limit	MPR
Frequency (MHz)				668	680.5	693	(dBm)	(dB)
10	QPSK	1	1	22.95	23.15	23.04	23.80	0
Channel				133100	136100	139100	Tune-up limit	MPR
Frequency (MHz)				665.5	680.5	695.5	(dBm)	(dB)
5	QPSK	1	1	22.86	23.00	22.90	23.80	0

<n41 – LAT>

BW [MHz]	Modulation	RB Size	RB Offset	Power Low Ch. / Freq.	Power Middle Ch. / Freq.	Power High Ch. / Freq.	Tune-up limit (dBm)	MPR (dB)
Channel				509200	518600	528000		
Frequency (MHz)				2546	2593	2640		
100	PI/2 BPSK	1	1	23.29	23.43	23.35	23.8	0
100	PI/2 BPSK	1	137	23.25	23.39	23.25		
100	PI/2 BPSK	1	271	23.24	23.40	23.31		
100	PI/2 BPSK	135	0	23.23	23.41	23.23	23.8	0
100	PI/2 BPSK	135	69	23.21	23.38	23.27		
100	PI/2 BPSK	135	138	23.19	23.35	23.22		
100	PI/2 BPSK	270	0	23.13	23.25	23.06	23.80	0
100	QPSK	1	1	23.14	23.27	23.15	23.8	0
100	QPSK	1	137	23.06	23.37	23.24		
100	QPSK	1	271	23.06	23.29	23.22		
100	QPSK	135	0	23.23	23.32	23.10	23.8	0
100	QPSK	135	69	23.17	23.28	23.14		
100	QPSK	135	138	23.12	23.16	23.09		
100	QPSK	270	0	22.94	23.10	23.06	23.80	0
100	16QAM	1	1	23.14	23.31	23.27	23.80	0
100	64QAM	1	1	23.19	23.28	23.20	23.80	0
100	256QAM	1	1	21.51	21.81	21.72	22.30	1.5
Channel				508200	518600	529000	Tune-up limit	MPR
Frequency (MHz)				2541	2593	2645	(dBm)	(dB)
90	QPSK	1	1	23.24	23.30	23.30	23.80	0
Channel				507200	518600	530000	Tune-up limit	MPR
Frequency (MHz)				2536	2593	2650	(dBm)	(dB)
80	QPSK	1	1	23.23	23.28	23.28	23.80	0
Channel				505200	518600	532000	Tune-up limit	MPR
Frequency (MHz)				2526	2593	2660	(dBm)	(dB)
60	QPSK	1	1	23.13	23.20	23.20	23.80	0
Channel				504200	518600	533000	Tune-up limit	MPR
Frequency (MHz)				2521	2593	2665	(dBm)	(dB)
50	QPSK	1	1	23.15	23.25	23.25	23.80	0
Channel				503200	518600	534000	Tune-up limit	MPR
Frequency (MHz)				2516	2593	2670	(dBm)	(dB)
40	QPSK	1	1	23.05	23.21	23.17	23.80	0
Channel				501200	518600	536000	Tune-up limit	MPR
Frequency (MHz)				2506	2593	2680	(dBm)	(dB)
20	QPSK	1	1	23.08	23.17	23.18	23.80	0

<UAT n2>

BW [MHz]	Modulation	RB Size	RB Offset	Power Low Ch. / Freq.	Power Middle Ch. / Freq.	Power High Ch. / Freq.	Tune-up limit (dBm)	MPR (dB)
Channel				372000	376000	380000		
Frequency (MHz)				1860	1880	1900		
20	PI/2 BPSK	1	1	20.64	20.96	20.98	22.0	0
20	PI/2 BPSK	1	53	20.40	20.95	20.94		
20	PI/2 BPSK	1	104	20.63	20.93	20.91		
20	PI/2 BPSK	50	0	20.37	20.83	20.94	22.0	0
20	PI/2 BPSK	50	28	20.36	20.98	20.99		
20	PI/2 BPSK	50	56	20.51	21.01	21.02		
20	PI/2 BPSK	100	0	20.35	20.97	20.98	22.00	0
20	QPSK	1	1	20.61	20.83	20.84	22.0	0
20	QPSK	1	53	20.37	20.78	20.92		
20	QPSK	1	104	20.57	20.84	20.76		
20	QPSK	50	0	20.31	20.63	20.94	22.0	0
20	QPSK	50	28	20.27	20.85	20.97		
20	QPSK	50	56	20.41	20.81	20.98		
20	QPSK	100	0	20.25	20.89	20.95	22.00	0
20	16QAM	1	1	20.58	20.85	21.14	22.00	0
20	64QAM	1	1	18.92	19.27	19.52	22.00	0
20	256QAM	1	1	17.37	17.57	17.80	22.00	0
Channel				371500	376000	380500	Tune-up limit	MPR
Frequency (MHz)				1857.5	1880	1902.5	(dBm)	(dB)
15	QPSK	1	1	20.50	20.77	21.03	22.00	0
Channel				371000	376000	381000	Tune-up limit	MPR
Frequency (MHz)				1855	1880	1905	(dBm)	(dB)
10	QPSK	1	1	20.48	20.65	21.00	22.00	0
Channel				370500	376000	381500	Tune-up limit	MPR
Frequency (MHz)				1852.5	1880	1907.5	(dBm)	(dB)
5	QPSK	1	1	20.48	20.74	20.99	22.00	0

<n5 – UAT>

BW [MHz]	Modulation	RB Size	RB Offset	Power Low Ch. / Freq.	Power Middle Ch. / Freq.	Power High Ch. / Freq.	Tune-up limit (dBm)	MPR (dB)
Channel				166800	167300	167800		
Frequency (MHz)				834	836.5	839		
20	PI/2 BPSK	1	1	22.79	22.71	22.64	23.8	0
20	PI/2 BPSK	1	53	22.53	22.65	22.55		
20	PI/2 BPSK	1	104	22.57	22.57	22.47		
20	PI/2 BPSK	50	0	22.70	22.68	22.64	23.8	0
20	PI/2 BPSK	50	28	22.63	22.69	22.68		
20	PI/2 BPSK	50	56	22.68	22.56	22.53		
20	PI/2 BPSK	100	0	22.61	22.69	22.64	23.80	0
20	QPSK	1	1	22.63	22.58	22.60	23.8	0
20	QPSK	1	53	22.41	22.55	22.35		
20	QPSK	1	104	22.48	22.55	22.40		
20	QPSK	50	0	22.66	22.59	22.47	23.8	0
20	QPSK	50	28	22.45	22.61	22.59		
20	QPSK	50	56	22.65	22.45	22.36		
20	QPSK	100	0	22.57	22.64	22.48	23.80	0
20	16QAM	1	1	22.44	22.42	22.42	22.80	1
20	64QAM	1	1	22.38	22.27	22.32	22.80	1
20	256QAM	1	1	20.29	20.38	17.35	20.80	3
Channel				166300	167300	168300	Tune-up limit	MPR
Frequency (MHz)				831.5	836.5	841.5	(dBm)	(dB)
15	QPSK	1	1	22.73	22.67	22.61	23.80	0
Channel				165800	167300	168800	Tune-up limit	MPR
Frequency (MHz)				829	836.5	844	(dBm)	(dB)
10	QPSK	1	1	22.59	22.51	22.46	23.80	0
Channel				165300	167300	169300	Tune-up limit	MPR
Frequency (MHz)				826.5	836.5	846.5	(dBm)	(dB)
5	QPSK	1	1	22.60	22.54	22.44	23.80	0

<n66>

BW [MHz]	Modulation	RB Size	RB Offset	Power Low Ch. / Freq.	Power Middle Ch. / Freq.	Power High Ch. / Freq.	Tune-up limit (dBm)	MPR (dB)
Channel				344000	349000	354000		
Frequency (MHz)				1720	1745	1770		
20	PI/2 BPSK	1	1	21.58	21.51	21.39	22.0	0
20	PI/2 BPSK	1	53	21.43	21.26	21.26		
20	PI/2 BPSK	1	104	21.46	21.35	21.25		
20	PI/2 BPSK	50	0	20.56	20.49	20.33	22.0	0
20	PI/2 BPSK	50	28	21.43	21.31	21.22		
20	PI/2 BPSK	50	56	20.52	20.45	20.33		
20	PI/2 BPSK	100	0	20.51	20.43	20.34	21.00	1
20	QPSK	1	1	21.52	21.33	21.22	22.0	0
20	QPSK	1	53	21.41	21.11	21.16		
20	QPSK	1	104	21.43	21.34	21.18		
20	QPSK	50	0	20.43	20.47	20.20	22.0	0
20	QPSK	50	28	21.40	21.18	21.02		
20	QPSK	50	56	20.42	20.41	20.30		
20	QPSK	100	0	20.48	20.30	20.32	21.00	1
20	16QAM	1	1	20.57	20.52	20.32	21.00	1
20	64QAM	1	1	19.48	19.45	19.32	19.50	2.5
20	256QAM	1	1	17.41	17.46	17.23	17.50	4.5
Channel				343500	349000	354500	Tune-up limit	MPR
Frequency (MHz)				1717.5	1745	1772.5	(dBm)	(dB)
15	QPSK	1	1	21.52	21.48	21.36	22.00	0
Channel				343000	349000	355000	Tune-up limit	MPR
Frequency (MHz)				1715	1745	1775	(dBm)	(dB)
10	QPSK	1	1	21.49	21.45	21.38	22.00	0
Channel				342500	349000	355500	Tune-up limit	MPR
Frequency (MHz)				1712.5	1745	1777.5	(dBm)	(dB)
5	QPSK	1	1	21.51	21.44	21.39	22.00	0

<n71 – UAT>

BW [MHz]	Modulation	RB Size	RB Offset	Power Low Ch. / Freq.	Power Middle Ch. / Freq.	Power High Ch. / Freq.	Tune-up limit (dBm)	MPR (dB)
Channel				134600	136100	137600		
Frequency (MHz)				673	680.5	688		
20	PI/2 BPSK	1	1	22.86	22.85	22.91	23.8	0
20	PI/2 BPSK	1	53	22.61	22.74	22.81		
20	PI/2 BPSK	1	104	22.73	22.83	22.66		
20	PI/2 BPSK	50	0	22.75	22.72	22.74	23.8	0
20	PI/2 BPSK	50	28	22.74	22.69	22.75		
20	PI/2 BPSK	50	56	22.72	22.73	22.76		
20	PI/2 BPSK	100	0	22.74	22.71	22.71	23.80	0
20	QPSK	1	1	22.66	22.69	22.75	23.8	0
20	QPSK	1	53	22.43	22.70	22.67		
20	QPSK	1	104	22.68	22.71	22.57		
20	QPSK	50	0	22.73	22.59	22.73	23.8	0
20	QPSK	50	28	22.63	22.56	22.61		
20	QPSK	50	56	22.52	22.58	22.66		
20	QPSK	100	0	22.60	22.53	22.62	23.80	0
20	16QAM	1	1	22.52	22.62	22.68	22.80	1
20	64QAM	1	1	22.40	22.36	22.38	22.80	1
20	256QAM	1	1	20.67	20.31	20.44	20.80	3
Channel				134100	136100	138100	Tune-up limit	MPR
Frequency (MHz)				670.5	680.5	690.5	(dBm)	(dB)
15	QPSK	1	1	22.89	22.75	22.82	23.80	0
Channel				133600	136100	138600	Tune-up limit	MPR
Frequency (MHz)				668	680.5	693	(dBm)	(dB)
10	QPSK	1	1	22.75	22.79	22.81	23.80	0
Channel				133100	136100	139100	Tune-up limit	MPR
Frequency (MHz)				665.5	680.5	695.5	(dBm)	(dB)
5	QPSK	1	1	22.69	22.72	22.84	23.80	0

<n41 – UAT>

BW [MHz]	Modulation	RB Size	RB Offset	Power Low Ch. / Freq.	Power Middle Ch. / Freq.	Power High Ch. / Freq.	Tune-up limit (dBm)	MPR (dB)
Channel				509200	518600	528000		
Frequency (MHz)				2546	2593	2640		
100	PI/2 BPSK	1	1	21.87	22.03	22.24	23.0	0.0
100	PI/2 BPSK	1	137	21.75	22.23	22.34		
100	PI/2 BPSK	1	271	21.91	22.41	22.35		
100	PI/2 BPSK	135	0	21.61	21.98	22.24	23.0	0.0
100	PI/2 BPSK	135	69	21.59	22.05	22.21		
100	PI/2 BPSK	135	138	21.62	22.25	22.15		
100	PI/2 BPSK	270	0	21.60	22.06	22.19	23.0	0.0
100	QPSK	1	1	21.73	21.86	22.22	23.0	0.0
100	QPSK	1	137	21.68	22.12	22.26		
100	QPSK	1	271	21.87	22.24	22.15		
100	QPSK	135	0	21.46	21.87	22.21	23.0	0.0
100	QPSK	135	69	21.58	21.92	22.12		
100	QPSK	135	138	21.47	22.23	22.02		
100	QPSK	270	0	21.55	22.01	22.16	23.0	0.0
100	16QAM	1	1	21.99	22.28	22.53	23.0	0.0
100	64QAM	1	1	20.20	21.91	22.24	23.0	0.0
100	256QAM	1	1	19.00	20.95	20.90	23.0	0.0
Channel				508200	518600	529000	Tune-up limit (dBm)	MPR (dB)
Frequency (MHz)				2541	2593	2645		
90	QPSK	1	1	21.96	22.12	22.25	23.0	0.0
Channel				507200	518600	530000	Tune-up limit (dBm)	MPR (dB)
Frequency (MHz)				2536	2593	2650		
80	QPSK	1	1	21.99	22.21	22.31	23.0	0.0
Channel				505200	518600	532000	Tune-up limit (dBm)	MPR (dB)
Frequency (MHz)				2526	2593	2660		
60	QPSK	1	1	21.69	21.84	22.04	23.0	0.0
Channel				504200	518600	533000	Tune-up limit (dBm)	MPR (dB)
Frequency (MHz)				2521	2593	2665		
50	QPSK	1	1	21.81	21.92	22.09	23.0	0.0
Channel				503200	518600	534000	Tune-up limit (dBm)	MPR (dB)
Frequency (MHz)				2516	2593	2670		
40	QPSK	1	1	22.18	22.50	22.45	23.0	0.0
Channel				501200	518600	536000	Tune-up limit (dBm)	MPR (dB)
Frequency (MHz)				2506	2593	2680		
20	QPSK	1	1	21.85	22.13	22.16	23.0	0.0

<DFT-s-OFDM—EN-DC--Reduced Power for At-Head>

<n2 – UAT>

BW [MHz]	Modulation	RB Size	RB Offset	Power Low Ch. / Freq.	Power Middle Ch. / Freq.	Power High Ch. / Freq.	Tune-up limit (dBm)	MPR (dB)
Channel				372000	376000	380000		
Frequency (MHz)				1860	1880	1900		
20	PI/2 BPSK	1	1	13.55	13.83	14.02	15.0	0.0
20	PI/2 BPSK	1	53	13.70	14.05	14.03		
20	PI/2 BPSK	1	104	13.69	14.00	13.97		
20	PI/2 BPSK	50	0	13.52	13.95	13.97	15.0	0.0
20	PI/2 BPSK	50	28	13.55	14.03	13.98		
20	PI/2 BPSK	50	56	13.63	13.99	13.97		
20	PI/2 BPSK	100	0	13.50	13.98	13.95	15.0	0.0
20	QPSK	1	1	13.36	13.73	14.02	15.0	0.0
20	QPSK	1	53	13.57	13.88	13.94		
20	QPSK	1	104	13.61	13.95	13.77		
20	QPSK	50	0	13.51	13.81	13.91	15.0	0.0
20	QPSK	50	28	13.50	13.86	13.84		
20	QPSK	50	56	13.44	13.95	13.95		
20	QPSK	100	0	13.37	13.85	13.87	15.0	0.0
20	16QAM	1	1	14.06	14.38	14.49	15.0	0.0
20	64QAM	1	1	13.50	13.80	13.86	15.0	0.0
20	256QAM	1	1	13.77	13.98	14.18	15.0	0.0
Channel				371500	376000	380500	Tune-up limit (dBm)	MPR (dB)
Frequency (MHz)				1857.5	1880	1902.5		
15	QPSK	1	1	13.58	13.79	14.01	15.0	0.0
Channel				371000	376000	381000	Tune-up limit (dBm)	MPR (dB)
Frequency (MHz)				1855	1880	1905		
10	QPSK	1	1	13.50	13.74	13.80	15.0	0.0
Channel				370500	376000	381500	Tune-up limit (dBm)	MPR (dB)
Frequency (MHz)				1852.5	1880	1907.5		
5	QPSK	1	1	13.50	13.76	13.67	15.0	0.0

<n5 – UAT>

BW [MHz]	Modulation	RB Size	RB Offset	Power Low Ch. / Freq.	Power Middle Ch. / Freq.	Power High Ch. / Freq.	Tune-up limit (dBm)	MPR (dB)
Channel				166800	167300	167800		
Frequency (MHz)				834	836.5	839		
20	PI/2 BPSK	1	1	19.10	19.08	19.01	20.0	0
20	PI/2 BPSK	1	53	19.08	19.02	18.91		
20	PI/2 BPSK	1	104	19.06	19.04	18.97		
20	PI/2 BPSK	50	0	19.05	19.01	19.01	20.0	0
20	PI/2 BPSK	50	28	19.03	19.00	19.00		
20	PI/2 BPSK	50	56	19.03	19.01	19.00		
20	PI/2 BPSK	100	0	19.04	18.99	18.95	20.00	0
20	QPSK	1	1	19.04	18.88	18.90	20.0	0
20	QPSK	1	53	18.94	18.84	18.91		
20	QPSK	1	104	18.95	19.03	18.85		
20	QPSK	50	0	18.90	18.89	18.86	20.0	0
20	QPSK	50	28	19.02	18.91	18.82		
20	QPSK	50	56	18.83	18.85	18.91		
20	QPSK	100	0	18.97	18.81	18.88	20.00	0
20	16QAM	1	1	19.08	19.07	19.05	20.00	0
20	64QAM	1	1	19.09	19.08	19.09	20.00	0
20	256QAM	1	1	19.02	19.08	18.92	20.00	0
Channel				166300	167300	168300	Tune-up limit	MPR
Frequency (MHz)				831.5	836.5	841.5	(dBm)	(dB)
15	QPSK	1	1	18.94	18.93	18.92	20.00	0
Channel				165800	167300	168800	Tune-up limit	MPR
Frequency (MHz)				829	836.5	844	(dBm)	(dB)
10	QPSK	1	1	18.90	18.92	18.91	20.00	0
Channel				165300	167300	169300	Tune-up limit	MPR
Frequency (MHz)				826.5	836.5	846.5	(dBm)	(dB)
5	QPSK	1	1	18.94	18.92	18.90	20.00	0

<n66 – UAT>

BW [MHz]	Modulation	RB Size	RB Offset	Power Low Ch. / Freq.	Power Middle Ch. / Freq.	Power High Ch. / Freq.	Tune-up limit (dBm)	MPR (dB)
Channel				344000	349000	354000		
Frequency (MHz)				1720	1745	1770		
20	PI/2 BPSK	1	1	13.81	13.72	13.49	14.5	0
20	PI/2 BPSK	1	53	13.57	13.54	13.36		
20	PI/2 BPSK	1	104	13.59	13.56	13.38		
20	PI/2 BPSK	50	0	13.60	13.37	13.59	14.5	0
20	PI/2 BPSK	50	28	13.39	13.32	13.12		
20	PI/2 BPSK	50	56	13.33	13.30	13.04		
20	PI/2 BPSK	100	0	13.31	13.26	13.05	14.50	1
20	QPSK	1	1	13.62	13.62	13.49	14.5	0
20	QPSK	1	53	13.51	13.48	13.18		
20	QPSK	1	104	13.57	13.41	13.25		
20	QPSK	50	0	13.40	13.33	13.39	14.5	0
20	QPSK	50	28	13.21	13.21	13.05		
20	QPSK	50	56	13.26	13.11	12.90		
20	QPSK	100	0	13.24	13.07	12.89	14.50	1
20	16QAM	1	1	13.57	13.61	13.27	14.50	1
20	64QAM	1	1	13.80	13.78	13.63	14.50	2.5
20	256QAM	1	1	13.57	13.54	13.18	14.50	4.5
Channel				343500	349000	354500	Tune-up limit	MPR
Frequency (MHz)				1717.5	1745	1772.5	(dBm)	(dB)
15	QPSK	1	1	13.58	13.55	13.32	14.50	0
Channel				343000	349000	355000	Tune-up limit	MPR
Frequency (MHz)				1715	1745	1775	(dBm)	(dB)
10	QPSK	1	1	13.44	13.23	13.07	14.50	0
Channel				342500	349000	355500	Tune-up limit	MPR
Frequency (MHz)				1712.5	1745	1777.5	(dBm)	(dB)
5	QPSK	1	1	13.50	13.30	13.03	14.50	0

<n71 – UAT>

BW [MHz]	Modulation	RB Size	RB Offset	Power Low Ch. / Freq.	Power Middle Ch. / Freq.	Power High Ch. / Freq.	Tune-up limit (dBm)	MPR (dB)
Channel				344000	349000	354000		
Frequency (MHz)				1720	1745	1770		
20	PI/2 BPSK	1	1	20.81	20.72	20.49	19.0	0
20	PI/2 BPSK	1	53	20.57	20.54	20.36		
20	PI/2 BPSK	1	104	20.59	20.56	20.38		
20	PI/2 BPSK	50	0	20.60	20.37	20.59	19.0	0
20	PI/2 BPSK	50	28	20.39	20.32	20.12		
20	PI/2 BPSK	50	56	20.33	20.30	20.04		
20	PI/2 BPSK	100	0	20.31	20.26	20.05	19.00	0
20	QPSK	1	1	20.65	20.56	20.35	19.0	0
20	QPSK	1	53	20.40	20.39	20.35		
20	QPSK	1	104	20.52	20.41	20.31		
20	QPSK	50	0	20.41	20.31	20.59	19.0	0
20	QPSK	50	28	20.27	20.27	19.98		
20	QPSK	50	56	20.16	20.17	19.97		
20	QPSK	100	0	20.20	20.15	20.03	19.00	0
20	16QAM	1	1	20.57	20.61	20.27	19.00	0
20	64QAM	1	1	20.80	20.78	20.63	19.00	0
20	256QAM	1	1	20.57	20.54	20.18	19.00	0
Channel				343500	349000	354500	Tune-up limit	MPR
Frequency (MHz)				1717.5	1745	1772.5	(dBm)	(dB)
15	QPSK	1	1	20.58	20.55	20.32	19.00	0
Channel				343000	349000	355000	Tune-up limit	MPR
Frequency (MHz)				1715	1745	1775	(dBm)	(dB)
10	QPSK	1	1	20.44	20.23	20.07	19.00	0
Channel				342500	349000	355500	Tune-up limit	MPR
Frequency (MHz)				1712.5	1745	1777.5	(dBm)	(dB)
5	QPSK	1	1	20.50	20.30	20.03	19.00	0

<UAT n41>

BW [MHz]	Modulation	RB Size	RB Offset	Power Low Ch. / Freq.	Power Middle Ch. / Freq.	Power High Ch. / Freq.	Tune-up limit (dBm)	MPR (dB)
Channel				509200	518600	528000		
Frequency (MHz)				2546	2593	2640		
100	PI/2 BPSK	1	1	14.77	15.03	15.39	16.5	0.0
100	PI/2 BPSK	1	137	14.78	15.23	15.31		
100	PI/2 BPSK	1	271	14.73	15.24	15.07		
100	PI/2 BPSK	135	0	14.60	15.00	15.14	16.5	0.0
100	PI/2 BPSK	135	69	14.68	15.13	15.20		
100	PI/2 BPSK	135	138	14.61	15.12	15.11		
100	PI/2 BPSK	270	0	14.58	14.98	15.10	16.5	0.0
100	QPSK	1	1	14.58	14.90	15.30	16.5	0.0
100	QPSK	1	137	14.63	15.16	15.14		
100	QPSK	1	271	14.69	15.20	15.00		
100	QPSK	135	0	14.46	14.81	15.03	16.5	0.0
100	QPSK	135	69	14.64	15.02	15.00		
100	QPSK	135	138	14.42	15.06	14.94		
100	QPSK	270	0	14.47	14.79	14.98	16.5	0.0
100	16QAM	1	1	14.97	15.14	15.45	16.5	0.0
100	64QAM	1	1	14.79	15.15	15.31	16.5	0.0
100	256QAM	1	1	15.10	15.23	15.30	16.5	0.0
Channel				508200	518600	529000	Tune-up limit (dBm)	MPR (dB)
Frequency (MHz)				2541	2593	2645		
90	QPSK	1	1	14.73	15.03	15.25	16.5	0.0
Channel				507200	518600	530000	Tune-up limit (dBm)	MPR (dB)
Frequency (MHz)				2536	2593	2650		
80	QPSK	1	1	14.77	15.00	15.36	16.5	0.0
Channel				505200	518600	532000	Tune-up limit (dBm)	MPR (dB)
Frequency (MHz)				2526	2593	2660		
60	QPSK	1	1	14.51	14.98	15.05	16.5	0.0
Channel				504200	518600	533000	Tune-up limit (dBm)	MPR (dB)
Frequency (MHz)				2521	2593	2665		
50	QPSK	1	1	14.50	14.80	15.05	16.5	0.0
Channel				503200	518600	534000	Tune-up limit (dBm)	MPR (dB)
Frequency (MHz)				2516	2593	2670		
40	QPSK	1	1	15.16	15.48	15.36	16.5	0.0
Channel				501200	518600	536000	Tune-up limit (dBm)	MPR (dB)
Frequency (MHz)				2506	2593	2680		
20	QPSK	1	1	14.70	15.01	15.20	16.5	0.0

<DFT-s-OFDM—EN-DC--Reduced Power for Hotspot On>

<n2 – LAT>

BW [MHz]	Modulation			RB Size	RB Offset	Power Low Ch. / Freq.	Power Middle Ch. / Freq.	Power High Ch. / Freq.	Tune-up limit (dBm)	MPR (dB)
Channel				372000	376000	380000				
Frequency (MHz)				1860	1880	1900				
20	PI/2 BPSK	1	1	20.03	20.15	20.33	21.0	0.0		
20	PI/2 BPSK	1	53	19.82	19.78	20.10				
20	PI/2 BPSK	1	104	20.09	20.24	20.20				
20	PI/2 BPSK	50	0	20.00	20.19	20.24	21.0	0.0		
20	PI/2 BPSK	50	28	19.81	20.15	20.21				
20	PI/2 BPSK	50	56	19.91	20.18	20.15				
20	PI/2 BPSK	100	0	19.77	20.18	20.20	21.0	0.0		
20	QPSK	1	1	20.01	20.13	20.15	21.0	0.0		
20	QPSK	1	53	19.68	19.66	19.92				
20	QPSK	1	104	20.07	20.06	20.15				
20	QPSK	50	0	19.90	20.10	20.05	21.0	0.0		
20	QPSK	50	28	19.70	20.05	20.17				
20	QPSK	50	56	19.89	20.16	19.98				
20	QPSK	100	0	19.74	20.18	20.10	21.0	0.0		
20	16QAM	1	1	19.94	20.04	20.26	21.0	0.0		
20	64QAM	1	1	19.48	19.67	19.79	20.5	0.5		
20	256QAM	1	1	16.57	17.22	17.73	18.5	2.5		
Channel				371500	376000	380500	Tune-up limit (dBm)	MPR (dB)		
Frequency (MHz)				1857.5	1880	1902.5				
15	QPSK	1	1	20.02	20.28	20.32	21.0	0.0		
Channel				371000	376000	381000	Tune-up limit (dBm)	MPR (dB)		
Frequency (MHz)				1855	1880	1905				
10	QPSK	1	1	19.79	20.06	20.03	21.0	0.0		
Channel				370500	376000	381500	Tune-up limit (dBm)	MPR (dB)		
Frequency (MHz)				1852.5	1880	1907.5				
5	QPSK	1	1	19.79	20.05	20.03	21.0	0.0		

<n5 – LAT>

BW [MHz]	Modulation	RB Size	RB Offset	Power Low Ch. / Freq.	Power Middle Ch. / Freq.	Power High Ch. / Freq.	Tune-up limit (dBm)	MPR (dB)
Channel				166800	167300	167800		
Frequency (MHz)				834	836.5	839		
20	PI/2 BPSK	1	1	22.66	22.59	22.57	23.3	0
20	PI/2 BPSK	1	53	22.45	22.52	22.49		
20	PI/2 BPSK	1	104	22.46	19.47	22.39		
20	PI/2 BPSK	50	0	22.51	22.55	22.54	23.3	0
20	PI/2 BPSK	50	28	22.55	22.58	22.51		
20	PI/2 BPSK	50	56	22.60	22.52	22.52		
20	PI/2 BPSK	100	0	22.53	22.57	22.49	23.30	0
20	QPSK	1	1	22.56	22.40	22.45	23.3	0
20	QPSK	1	53	22.32	22.48	22.35		
20	QPSK	1	104	22.27	19.35	22.37		
20	QPSK	50	0	22.32	22.45	22.35	23.3	0
20	QPSK	50	28	22.51	22.41	22.42		
20	QPSK	50	56	22.45	22.35	22.47		
20	QPSK	100	0	22.39	22.50	22.39	23.30	0
20	16QAM	1	1	22.63	22.64	22.56	23.30	0
20	64QAM	1	1	22.62	22.58	22.55	23.30	0
20	256QAM	1	1	22.65	22.62	22.59	23.30	0
Channel				166300	167300	168300	Tune-up limit	MPR
Frequency (MHz)				831.5	836.5	841.5	(dBm)	(dB)
15	QPSK	1	1	22.58	22.50	22.63	23.30	0
Channel				165800	167300	168800	Tune-up limit	MPR
Frequency (MHz)				829	836.5	844	(dBm)	(dB)
10	QPSK	1	1	22.34	22.28	22.35	23.30	0
Channel				165300	167300	169300	Tune-up limit	MPR
Frequency (MHz)				826.5	836.5	846.5	(dBm)	(dB)
5	QPSK	1	1	22.36	22.33	22.25	23.30	0

<n66 – LAT>

BW [MHz]	Modulation	RB Size	RB Offset	Power Low Ch. / Freq.	Power Middle Ch. / Freq.	Power High Ch. / Freq.	Tune-up limit (dBm)	MPR (dB)
Channel				344000	349000	354000		
Frequency (MHz)				1720	1745	1770		
20	PI/2 BPSK	1	1	22.30	22.32	22.18	23.0	0.0
20	PI/2 BPSK	1	53	22.26	22.30	22.14		
20	PI/2 BPSK	1	104	22.24	22.29	22.12		
20	PI/2 BPSK	50	0	22.27	22.30	22.12	23.0	0.0
20	PI/2 BPSK	50	28	22.26	22.28	22.16		
20	PI/2 BPSK	50	56	22.23	22.27	22.17		
20	PI/2 BPSK	100	0	21.26	21.27	21.22	22.0	1.0
20	QPSK	1	1	22.15	22.22	22.01	23.0	0.0
20	QPSK	1	53	22.23	22.13	21.96		
20	QPSK	1	104	22.21	22.10	22.07		
20	QPSK	50	0	22.25	22.16	22.11	23.0	0.0
20	QPSK	50	28	22.17	22.16	22.14		
20	QPSK	50	56	22.07	22.26	22.03		
20	QPSK	100	0	21.25	21.23	21.14	22.0	1.0
20	16QAM	1	1	21.53	21.47	21.45	22.0	1.0
20	64QAM	1	1	20.09	20.13	20.13	20.5	2.5
20	256QAM	1	1	18.10	17.99	17.99	18.5	4.5
Channel				343500	349000	354500	Tune-up limit (dBm)	MPR (dB)
Frequency (MHz)				1717.5	1745	1772.5		
15	QPSK	1	1	22.23	22.26	22.10	23.0	0.0
Channel				343000	349000	355000	Tune-up limit (dBm)	MPR (dB)
Frequency (MHz)				1715	1745	1775		
10	QPSK	1	1	22.16	22.24	22.10	23.0	0.0
Channel				342500	349000	355500	Tune-up limit (dBm)	MPR (dB)
Frequency (MHz)				1712.5	1745	1777.5		
5	QPSK	1	1	22.13	22.05	22.03	23.0	0.0

<n71 – LAT>

BW [MHz]	Modulation	RB Size	RB Offset	Power Low Ch. / Freq.	Power Middle Ch. / Freq.	Power High Ch. / Freq.	Tune-up limit (dBm)	MPR (dB)
Channel				134600	136100	137600		
Frequency (MHz)				673	680.5	688		
20	PI/2 BPSK	1	1	20.74	20.56	20.53	22.3	0
20	PI/2 BPSK	1	53	20.44	20.22	20.32		
20	PI/2 BPSK	1	104	20.39	20.34	20.19		
20	PI/2 BPSK	50	0	20.65	20.53	20.48	22.3	0
20	PI/2 BPSK	50	28	20.51	20.44	20.45		
20	PI/2 BPSK	50	56	20.26	20.31	20.33		
20	PI/2 BPSK	100	0	20.46	20.42	20.44	22.30	0
20	QPSK	1	1	20.68	20.43	20.38	22.3	0
20	QPSK	1	53	20.26	20.03	20.31		
20	QPSK	1	104	20.25	20.34	20.18		
20	QPSK	50	0	20.48	20.36	20.45	22.3	0
20	QPSK	50	28	20.36	20.44	20.43		
20	QPSK	50	56	20.21	20.17	20.27		
20	QPSK	100	0	20.44	20.35	20.30	22.30	0
20	16QAM	1	1	20.45	20.22	20.30	22.30	0
20	64QAM	1	1	20.73	20.72	20.72	22.30	0
20	256QAM	1	1	20.72	20.66	20.68	21.50	0.8
Channel				134100	136100	138100	Tune-up limit	MPR
Frequency (MHz)				670.5	680.5	690.5	(dBm)	(dB)
15	QPSK	1	1	20.73	20.48	20.45	22.30	0
Channel				133600	136100	138600	Tune-up limit	MPR
Frequency (MHz)				668	680.5	693	(dBm)	(dB)
10	QPSK	1	1	20.47	20.36	20.29	22.30	0
Channel				133100	136100	139100	Tune-up limit	MPR
Frequency (MHz)				665.5	680.5	695.5	(dBm)	(dB)
5	QPSK	1	1	20.48	20.30	20.15	22.30	0

<n41 – LAT>

BW [MHz]	Modulation	RB Size	RB Offset	Power Low Ch. / Freq.	Power Middle Ch. / Freq.	Power High Ch. / Freq.	Tune-up limit (dBm)	MPR (dB)
Channel				509200	518600	528000		
Frequency (MHz)				2546	2593	2640		
100	PI/2 BPSK	1	1	20.15	20.33	20.05	21.0	0.0
100	PI/2 BPSK	1	137	19.92	20.12	19.76		
100	PI/2 BPSK	1	271	19.65	20.07	19.71		
100	PI/2 BPSK	135	0	20.07	20.09	19.89	21.0	0.0
100	PI/2 BPSK	135	69	19.92	20.04	19.82		
100	PI/2 BPSK	135	138	19.74	20.03	19.85		
100	PI/2 BPSK	270	0	19.94	20.01	19.89	21.0	0.0
100	QPSK	1	1	20.07	20.26	19.93	21.0	0.0
100	QPSK	1	137	19.85	19.92	19.72		
100	QPSK	1	271	19.59	19.94	19.65		
100	QPSK	135	0	19.97	19.98	19.86	21.0	0.0
100	QPSK	135	69	19.84	19.87	19.74		
100	QPSK	135	138	19.58	19.90	19.72		
100	QPSK	270	0	19.87	19.99	19.71	21.0	0.0
100	16QAM	1	1	20.14	20.31	19.90	21.0	0.0
100	64QAM	1	1	20.14	20.30	20.02	21.0	0.0
100	256QAM	1	1	20.05	20.14	19.76	21.0	0.0
Channel				508200	518600	529000	Tune-up limit (dBm)	MPR (dB)
Frequency (MHz)				2541	2593	2645		
90	QPSK	1	1	19.90	19.92	19.89	21.0	0.0
Channel				507200	518600	530000	Tune-up limit (dBm)	MPR (dB)
Frequency (MHz)				2536	2593	2650		
80	QPSK	1	1	19.85	19.87	19.83	21.0	0.0
Channel				505200	518600	532000	Tune-up limit (dBm)	MPR (dB)
Frequency (MHz)				2526	2593	2660		
60	QPSK	1	1	19.82	19.81	19.80	21.0	0.0
Channel				504200	518600	533000	Tune-up limit (dBm)	MPR (dB)
Frequency (MHz)				2521	2593	2665		
50	QPSK	1	1	19.84	19.86	19.85	21.0	0.0
Channel				503200	518600	534000	Tune-up limit (dBm)	MPR (dB)
Frequency (MHz)				2516	2593	2670		
40	QPSK	1	1	19.82	19.85	19.82	21.0	0.0
Channel				501200	518600	536000	Tune-up limit (dBm)	MPR (dB)
Frequency (MHz)				2506	2593	2680		
20	QPSK	1	1	19.85	19.87	19.82	21.0	0.0

<n2 – UAT>

BW [MHz]	Modulation	RB Size	RB Offset	Power Low Ch. / Freq.	Power Middle Ch. / Freq.	Power High Ch. / Freq.	Tune-up limit (dBm)	MPR (dB)
Channel				372000	376000	380000		
Frequency (MHz)				1860	1880	1900		
20	PI/2 BPSK	1	1	18.14	18.46	18.48	19.5	0
20	PI/2 BPSK	1	53	17.90	18.45	18.44		
20	PI/2 BPSK	1	104	18.13	18.43	18.41		
20	PI/2 BPSK	50	0	17.87	18.33	18.44	19.5	0
20	PI/2 BPSK	50	28	17.86	18.48	18.49		
20	PI/2 BPSK	50	56	18.01	18.51	18.52		
20	PI/2 BPSK	100	0	17.85	18.47	18.48	19.50	0
20	QPSK	1	1	18.02	18.32	18.32	19.5	0
20	QPSK	1	53	17.77	18.34	18.24		
20	QPSK	1	104	17.95	18.29	18.39		
20	QPSK	50	0	17.70	18.20	18.40	19.5	0
20	QPSK	50	28	17.86	18.48	18.43		
20	QPSK	50	56	18.00	18.37	18.43		
20	QPSK	100	0	17.83	18.27	18.35	19.50	0
20	16QAM	1	1	18.08	18.35	18.64	19.50	0
20	64QAM	1	1	16.42	16.77	17.02	19.50	0
20	256QAM	1	1	14.87	15.07	15.30	19.50	0
Channel				371500	376000	380500	Tune-up limit	MPR
Frequency (MHz)				1857.5	1880	1902.5	(dBm)	(dB)
15	QPSK	1	1	18.00	18.27	18.53	19.50	0
Channel				371000	376000	381000	Tune-up limit	MPR
Frequency (MHz)				1855	1880	1905	(dBm)	(dB)
10	QPSK	1	1	17.98	18.15	18.50	19.50	0
Channel				370500	376000	381500	Tune-up limit	MPR
Frequency (MHz)				1852.5	1880	1907.5	(dBm)	(dB)
5	QPSK	1	1	17.98	18.24	18.49	19.50	0

<n5 – UAT>

BW [MHz]	Modulation	RB Size	RB Offset	Power Low Ch. / Freq.	Power Middle Ch. / Freq.	Power High Ch. / Freq.	Tune-up limit (dBm)	MPR (dB)
Channel				166800	167300	167800		
Frequency (MHz)				834	836.5	839		
20	PI/2 BPSK	1	1	19.43	19.48	19.38	20.0	0
20	PI/2 BPSK	1	53	19.28	19.32	19.26		
20	PI/2 BPSK	1	104	19.27	19.31	19.10		
20	PI/2 BPSK	50	0	19.37	19.39	19.36	20.0	0
20	PI/2 BPSK	50	28	19.30	19.35	19.35		
20	PI/2 BPSK	50	56	19.26	19.29	19.26		
20	PI/2 BPSK	100	0	19.33	19.41	19.31	20.00	0
20	QPSK	1	1	19.38	19.37	19.18	20.0	0
20	QPSK	1	53	19.10	19.32	19.23		
20	QPSK	1	104	19.24	19.13	18.93		
20	QPSK	50	0	19.18	19.28	19.32	20.0	0
20	QPSK	50	28	19.16	19.34	19.19		
20	QPSK	50	56	19.24	19.17	19.19		
20	QPSK	100	0	19.29	19.38	19.16	20.00	0
20	16QAM	1	1	19.18	19.26	19.18	20.00	0
20	64QAM	1	1	19.41	19.47	19.46	20.00	0
20	256QAM	1	1	19.42	19.45	19.45	20.00	0
Channel				166300	167300	168300	Tune-up limit	MPR
Frequency (MHz)				831.5	836.5	841.5	(dBm)	(dB)
15	QPSK	1	1	19.39	19.44	19.39	20.00	0
Channel				165800	167300	168800	Tune-up limit	MPR
Frequency (MHz)				829	836.5	844	(dBm)	(dB)
10	QPSK	1	1	19.22	19.12	19.22	20.00	0
Channel				165300	167300	169300	Tune-up limit	MPR
Frequency (MHz)				826.5	836.5	846.5	(dBm)	(dB)
5	QPSK	1	1	19.16	19.27	19.14	20.00	0

<n66 – UAT>

BW [MHz]	Modulation	RB Size	RB Offset	Power Low Ch. / Freq.	Power Middle Ch. / Freq.	Power High Ch. / Freq.	Tune-up limit (dBm)	MPR (dB)
Channel				344000	349000	354000		
Frequency (MHz)				1720	1745	1770		
20	PI/2 BPSK	1	1	18.60	18.64	18.56	20.0	0
20	PI/2 BPSK	1	53	18.55	18.61	18.55		
20	PI/2 BPSK	1	104	18.57	18.62	18.53		
20	PI/2 BPSK	50	0	18.59	18.62	18.50	20.0	0
20	PI/2 BPSK	50	28	18.55	18.61	18.51		
20	PI/2 BPSK	50	56	18.53	18.58	18.52		
20	PI/2 BPSK	100	0	17.58	17.59	17.54	19.00	1
20	QPSK	1	1	18.56	18.58	18.46	20.0	0
20	QPSK	1	53	18.39	18.53	18.45		
20	QPSK	1	104	18.47	18.43	18.43		
20	QPSK	50	0	18.44	18.52	18.43	20.0	0
20	QPSK	50	28	18.52	18.49	18.38		
20	QPSK	50	56	18.47	18.43	18.42		
20	QPSK	100	0	17.44	17.44	17.35	19.00	1
20	16QAM	1	1	17.81	17.68	17.71	19.00	1
20	64QAM	1	1	16.48	16.51	16.49	17.50	2.5
20	256QAM	1	1	14.59	14.51	14.27	15.50	4.5
Channel				343500	349000	354500	Tune-up limit	MPR
Frequency (MHz)				1717.5	1745	1772.5	(dBm)	(dB)
15	QPSK	1	1	18.56	18.55	18.53	20.00	0
Channel				343000	349000	355000	Tune-up limit	MPR
Frequency (MHz)				1715	1745	1775	(dBm)	(dB)
10	QPSK	1	1	18.48	18.49	18.42	20.00	0
Channel				342500	349000	355500	Tune-up limit	MPR
Frequency (MHz)				1712.5	1745	1777.5	(dBm)	(dB)
5	QPSK	1	1	18.46	18.43	18.34	20.00	0

<n71 – UAT>

BW [MHz]	Modulation	RB Size	RB Offset	Power Low Ch. / Freq.	Power Middle Ch. / Freq.	Power High Ch. / Freq.	Tune-up limit (dBm)	MPR (dB)
Channel				134600	136100	137600		
Frequency (MHz)				673	680.5	688		
20	PI/2 BPSK	1	1	19.28	19.11	19.05	20.0	0
20	PI/2 BPSK	1	53	18.96	18.79	18.73		
20	PI/2 BPSK	1	104	18.84	18.66	18.61		
20	PI/2 BPSK	50	0	19.09	19.04	18.89	20.0	0
20	PI/2 BPSK	50	28	19.05	18.94	18.92		
20	PI/2 BPSK	50	56	18.89	18.69	18.65		
20	PI/2 BPSK	100	0	19.03	18.99	18.86	20.00	0
20	QPSK	1	1	19.22	19.06	18.88	20.0	0
20	QPSK	1	53	18.82	18.60	18.65		
20	QPSK	1	104	18.82	18.57	18.50		
20	QPSK	50	0	18.91	18.95	18.83	20.0	0
20	QPSK	50	28	19.00	18.87	18.77		
20	QPSK	50	56	18.77	18.69	18.53		
20	QPSK	100	0	19.01	18.99	18.85	20.00	0
20	16QAM	1	1	18.97	18.89	18.92	20.00	0
20	64QAM	1	1	19.21	19.05	19.02	20.00	0
20	256QAM	1	1	19.23	19.13	19.09	20.00	0
Channel				134100	136100	138100	Tune-up limit	MPR
Frequency (MHz)				670.5	680.5	690.5	(dBm)	(dB)
15	QPSK	1	1	19.16	19.09	19.01	20.00	0
Channel				133600	136100	138600	Tune-up limit	MPR
Frequency (MHz)				668	680.5	693	(dBm)	(dB)
10	QPSK	1	1	19.02	18.99	18.94	20.00	0
Channel				133100	136100	139100	Tune-up limit	MPR
Frequency (MHz)				665.5	680.5	695.5	(dBm)	(dB)
5	QPSK	1	1	18.98	18.92	18.91	20.00	0

<UAT n41>

BW [MHz]	Modulation	RB Size	RB Offset	Power Low Ch. / Freq.	Power Middle Ch. / Freq.	Power High Ch. / Freq.	Tune-up limit (dBm)	MPR (dB)
Channel				509200	518600	528000		
Frequency (MHz)				2546	2593	2640		
100	PI/2 BPSK	1	1	18.60	19.06	19.18	19.5	0
100	PI/2 BPSK	1	137	18.61	19.33	19.34		
100	PI/2 BPSK	1	271	18.50	19.32	19.23		
100	PI/2 BPSK	135	0	18.52	19.19	19.31	19.5	0
100	PI/2 BPSK	135	69	18.48	19.07	19.28		
100	PI/2 BPSK	135	138	18.45	19.18	19.27		
100	PI/2 BPSK	270	0	18.41	19.01	19.24	19.50	0
100	QPSK	1	1	18.50	19.02	18.99	19.5	0
100	QPSK	1	137	18.61	19.31	19.16		
100	QPSK	1	271	18.47	19.13	19.12		
100	QPSK	135	0	18.49	19.06	19.13	19.5	0
100	QPSK	135	69	18.46	18.91	19.10		
100	QPSK	135	138	18.36	19.06	19.25		
100	QPSK	270	0	18.36	18.97	19.18	19.50	0
100	16QAM	1	1	18.89	19.19	19.45	19.50	0
100	64QAM	1	1	18.54	18.69	19.10	19.50	0
100	256QAM	1	1	18.63	19.02	19.26	19.50	0
Channel				508200	518600	529000	Tune-up limit	MPR
Frequency (MHz)				2541	2593	2645	(dBm)	(dB)
90	QPSK	1	1	18.65	18.98	19.08	19.50	0
Channel				507200	518600	530000	Tune-up limit	MPR
Frequency (MHz)				2536	2593	2650	(dBm)	(dB)
80	QPSK	1	1	18.63	19.05	19.20	19.50	0
Channel				505200	518600	532000	Tune-up limit	MPR
Frequency (MHz)				2526	2593	2660	(dBm)	(dB)
60	QPSK	1	1	18.70	18.68	19.21	19.50	0
Channel				504200	518600	533000	Tune-up limit	MPR
Frequency (MHz)				2521	2593	2665	(dBm)	(dB)
50	QPSK	1	1	18.69	18.72	19.17	19.50	0
Channel				503200	518600	534000	Tune-up limit	MPR
Frequency (MHz)				2516	2593	2670	(dBm)	(dB)
40	QPSK	1	1	19.04	19.45	19.58	19.50	0
Channel				501200	518600	536000	Tune-up limit	MPR
Frequency (MHz)				2506	2593	2680	(dBm)	(dB)
20	QPSK	1	1	18.62	18.96	19.13	19.50	0

15. WiFi/Bluetooth Output Power (Unit: dBm)

General Note:

1. Per KDB 248227 D01v02r02, SAR test reduction is determined according to 802.11 transmission mode configurations and certain exposure conditions with multiple test positions. In the 2.4 GHz band, separate SAR procedures are applied to DSSS and OFDM configurations to simplify DSSS test requirements. For OFDM, in both 2.4 and 5 GHz bands, an initial test configuration must be determined for each standalone and aggregated frequency band, according to the transmission mode configuration with the highest maximum output power specified for production units to perform SAR measurements. If the same highest maximum output power applies to different combinations of channel bandwidths, modulations and data rates, additional procedures are applied to determine which test configurations require SAR measurement. When applicable, an initial test position may be applied to reduce the number of SAR measurements required for next to the ear, UMPC mini-tablet or hotspot mode configurations with multiple test positions.
2. For 2.4 GHz 802.11b DSSS, either the initial test position procedure for multiple exposure test positions or the DSSS procedure for fixed exposure position is applied; these are mutually exclusive. For 2.4 GHz and 5 GHz OFDM configurations, the initial test configuration is applied to measure SAR using either the initial test position procedure for multiple exposure test position configurations or the initial test configuration procedures for fixed exposure test conditions. Based on the reported SAR of the measured configurations and maximum output power of the transmission mode configurations that are not included in the initial test configuration, the subsequent test configuration and initial test position procedures are applied to determine if SAR measurements are required for the remaining OFDM transmission configurations. In general, the number of test channels that require SAR measurement is minimized based on maximum output power measured for the test sample(s).
3. For OFDM transmission configurations in the 2.4 GHz and 5 GHz bands, When the same maximum power is specified for multiple transmission modes in a frequency band, the largest channel bandwidth, lowest order modulation, lowest data rate and lowest order 802.11a/g/n/ac mode is used for SAR measurement, on the highest measured output power channel for each frequency band.
4. DSSS and OFDM configurations are considered separately according to the required SAR procedures. SAR is measured in the initial test position using the 802.11 transmission mode configuration required by the DSSS procedure or initial test configuration and subsequent test configuration(s) according to the OFDM procedures.18 The initial test position procedure is described in the following:
   a. When the reported SAR of the initial test position is ≤ 0.4 W/kg, further SAR measurement is not required for the other test positions in that exposure configuration and 802.11 transmission mode combinations within the frequency band or aggregated band.
   b. When the reported SAR of the test position is > 0.4 W/kg, SAR is repeated for the 802.11 transmission mode configuration tested in the initial test position to measure the subsequent next closet/smallest test separation distance and maximum coupling test position on the highest maximum output power channel, until the report SAR is ≤ 0.8 W/kg or all required test position are tested.
   c. For all positions/configurations, when the reported SAR is > 0.8 W/kg, SAR is measured for these test positions/configurations on the subsequent next highest measured output power channel(s) until the reported SAR is ≤ 1.2 W/kg or all required channels are tested.
5. Per 201904 TCBC workshops, General principles of FCC KDB Publication 248227 D01 can be applied to determine the SAR Initial Test Configurations and test reduction for 802.11ax SAR testing. For the table below the 802.11ax maximum power is SU (non-OFDMA)
6. In applying the test guidance, the IEEE 802.11 mode with the maximum output power (out of all modes) should be considered for testing
7. For modes with the same maximum output power, the guidance from section 5.3.2 a) of FCC KDB Publication 248227 D01 should be applied, with 802.11ax being considered as the highest 802.11 mode for the appropriate frequency bands
8. When SAR testing for 802.11ax is required
   a. If the maximum output power is highest for OFDMA scenarios, choose the tone size with the maximum number of tones and the highest maximum output power
   b. Otherwise, consider the fully allocated channel for SAR testing
   c. When SAR testing is required on RU sizes less than the fully allocated channel, use the RU number closest to the middle of the channel, choosing the higher RU number when two RUs are equidistant to the middle of the channel
9. When WLAN transmit simultaneous with WWAN will limit different maximum output power level as following, detail description include operational description
   a. Level 1: the WLAN is transmitting standalone
   b. Level 2: the WWAN transmit simultaneous with 2.4GHz WLAN or 5GHz WLAN
   c. Level 3: the WWAN and FR1 or nter-band CA transmit simultaneous with 2.4GHz WLAN or 5GHz WLAN + Bluetooth

<For At-Head Mode level 1>

<2.4GHz WLAN>

	Mode	Channel	Frequency (MHz)	Average power (dBm)	Tune-Up Limit	Duty Cycle %
2.4GHz WLAN	802.11b 1Mbps	1	2412	14.71	16.71	100.00
		6	2437	14.66	16.66	
		11	2462	14.91	16.91	
	802.11g 6Mbps	1	2412	13.71	15.71	99.18
		6	2437	13.56	15.56	
		11	2462	13.71	15.71	
	802.11n-HT20 MCS0	1	2412	14.81	16.81	99.12
		6	2437	14.76	16.76	
		11	2462	14.81	16.81	
	802.11ax-HE20 MCS0	1	2412	14.76	16.76	98.31
		6	2437	14.86	16.86	
		11	2462	14.81	16.81	
	802.11ax-HE40 MCS0	3	2422	14.61	16.61	96.13
		6	2437	14.51	16.51	
		9	2452	14.36	16.36	

<5GHz WLAN>

	Mode	Channel	Frequency (MHz)	Average power (dBm)	Tune-Up Limit	Duty Cycle %
5.2GHz WLAN	802.11a 6Mbps	36	5180	18.36	20.36	98.46
		40	5200	18.30	20.30	
		44	5220	18.33	20.33	
		48	5240	18.34	20.34	
	802.11n-HT20 MCS0	36	5180	18.24	20.24	98.79
		40	5200	18.18	20.18	
		44	5220	18.22	20.22	
		48	5240	18.29	20.29	
	802.11n-HT40 MCS0	38	5190	19.72	21.72	98.08
		46	5230	19.71	21.71	
	802.11ac-VHT20 MCS0	36	5180	18.19	20.19	98.11
		40	5200	18.16	20.16	
		44	5220	18.20	20.20	
		48	5240	18.28	20.28	
	802.11ac-VHT40 MCS0	38	5190	19.66	21.66	95.88
		46	5230	19.68	21.68	
	802.11ac-VHT80 MCS0	42	5210	18.26	20.26	93.21
	802.11ax-HE20 MCS0	36	5180	18.31	20.31	97.79
		40	5200	18.32	20.32	
		44	5220	18.33	20.33	
		48	5240	17.99	19.99	
	802.11ax-HE40 MCS0	38	5190	19.30	21.30	97.30
		46	5230	19.34	21.34	
	802.11ax-HE80 MCS0	42	5210	18.79	20.79	95.55

	Mode	Channel	Frequency (MHz)	Average power (dBm)	Tune-Up Limit	Duty Cycle %
5.3GHz WLAN	802.11a 6Mbps	52	5260	18.39	20.39	98.46
		56	5280	18.33	20.33	
		60	5300	18.36	20.36	
		64	5320	18.41	20.41	
	802.11n-HT20 MCS0	52	5260	18.40	20.40	98.79
		56	5280	18.32	20.32	
		60	5300	18.39	20.39	
		64	5320	18.49	20.49	
	802.11n-HT40 MCS0	54	5270	19.91	21.91	98.08
		62	5310	19.80	21.80	
	802.11ac-VHT20 MCS0	52	5260	18.36	20.36	98.11
		56	5280	18.30	20.30	
		60	5300	18.36	20.36	
		64	5320	18.47	20.47	
	802.11ac-VHT40 MCS0	54	5270	19.87	21.87	95.88
		62	5310	19.75	21.75	
	802.11ac-VHT80 MCS0	58	5290	18.23	20.23	93.21
	802.11ax-HE20 MCS0	52	5260	18.46	20.46	97.79
		56	5280	18.45	20.45	
		60	5300	18.48	20.48	
		64	5320	18.55	20.55	
	802.11ax-HE40 MCS0	54	5270	19.51	21.51	97.30
		62	5310	19.40	21.40	
	802.11ax-HE80 MCS0	58	5290	18.87	20.87	95.55

	Mode	Channel	Frequency (MHz)	Average power (dBm)	Tune-Up Limit	Duty Cycle %
5.5GHz WLAN	802.11a 6Mbps	100	5500	16.22	18.22	98.46
		116	5580	16.18	18.18	
		124	5620	16.16	18.16	
		132	5660	16.14	18.14	
		144	5720	15.91	17.91	
	802.11n-HT20 MCS0	100	5500	16.04	18.04	98.79
		116	5580	15.92	17.92	
		124	5620	16.01	18.01	
		132	5660	16.00	18.00	
		144	5720	15.42	17.42	
	802.11n-HT40 MCS0	102	5510	17.40	19.40	98.08
		110	5550	17.44	19.44	
		126	5630	17.22	19.22	
		134	5670	17.01	19.01	
		142	5710	16.83	18.83	
	802.11ac-VHT20 MCS0	100	5500	15.99	17.99	98.11
		116	5580	15.90	17.90	
		124	5620	15.96	17.96	
		132	5660	15.94	17.94	
		140	5700	15.38	17.38	
		144	5720	15.38	17.38	
	802.11ac-VHT40 MCS0	102	5510	17.34	19.34	95.88
		110	5550	17.40	19.40	
		126	5630	17.20	19.20	
		134	5670	16.97	18.97	
		142	5710	16.79	18.79	
	802.11ac-VHT80 MCS0	106	5530	16.18	18.18	93.21
		122	5610	16.13	18.13	
		138	5690	15.92	17.92	
	802.11ax-HE20 MCS0	100	5500	16.07	18.07	97.79
		116	5580	15.89	17.89	
		124	5620	15.73	17.73	
		132	5660	15.65	17.65	
		144	5720	15.41	17.41	
	802.11ax-HE40 MCS0	102	5510	16.95	18.95	97.30
		110	5550	16.95	18.95	
		126	5630	16.85	18.85	
		134	5670	16.51	18.51	
		142	5710	16.36	18.36	
	802.11ax-HE80 MCS0	106	5530	16.84	18.84	95.55
		122	5610	16.39	18.39	
		138	5690	16.14	18.14	

	Mode	Channel	Frequency (MHz)	Average power (dBm)	Tune-Up Limit	Duty Cycle %
5.8GHz WLAN	802.11a 6Mbps	149	5745	16.54	18.54	99.18
		157	5785	16.31	18.31	
		165	5825	16.28	18.28	
	802.11n-HT20 MCS0	149	5745	16.11	18.11	99.12
		157	5785	15.84	17.84	
		165	5825	15.85	17.85	
	802.11n-HT40 MCS0	151	5755	17.52	19.52	98.08
		159	5795	17.23	19.23	
	802.11ac-VHT20 MCS0	149	5745	16.09	18.09	98.30
		157	5785	15.83	17.83	
		165	5825	15.78	17.78	
	802.11ac-VHT40 MCS0	151	5755	17.44	19.44	96.69
		159	5795	17.15	19.15	
	802.11ac-VHT80 MCS0	155	5775	16.23	18.23	93.70
	802.11ax-HE20 MCS0	149	5745	16.20	18.20	99.33
		157	5785	15.95	17.95	
		165	5825	15.88	17.88	
	802.11ax-HE40 MCS0	151	5755	17.14	19.14	97.82
		159	5795	16.79	18.79	
	802.11ax-HE80 MCS0	155	5775	16.47	18.47	95.88

<For Hotspot Mode_level 1>

<2.4GHz WLAN>

	Mode	Channel	Frequency (MHz)	Average power (dBm)	Tune-Up Limit	Duty Cycle %
2.4GHz WLAN	802.11b 1Mbps	1	2412	15.71	17.71	100.00
		6	2437	15.66	17.66	
		11	2462	15.91	17.91	
	802.11g 6Mbps	1	2412	14.71	16.71	99.18
		6	2437	14.56	16.56	
		11	2462	14.71	16.71	
	802.11n-HT20 MCS0	1	2412	15.81	17.81	99.12
		6	2437	15.76	17.76	
		11	2462	15.81	17.81	
	802.11ax-HE20 MCS0	1	2412	15.76	17.76	98.31
		6	2437	15.86	17.86	
		11	2462	15.81	17.81	
	802.11ax-HE40 MCS0	3	2422	15.61	17.61	96.13
		6	2437	15.56	17.56	
		9	2452	15.36	17.36	

<5GHz WLAN>

	Mode	Channel	Frequency (MHz)	Average power (dBm)	Tune-Up Limit	Duty Cycle %
5.2GHz WLAN	802.11a 6Mbps	36	5180	16.35	18.35	98.46
		40	5200	16.30	18.30	
		44	5220	16.34	18.34	
		48	5240	16.33	18.33	
	802.11n-HT20 MCS0	36	5180	16.24	18.24	98.79
		40	5200	16.18	18.18	
		44	5220	16.23	18.23	
		48	5240	16.29	18.29	
	802.11n-HT40 MCS0	38	5190	17.73	19.73	98.08
		46	5230	17.72	19.72	
	802.11ac-VHT20 MCS0	36	5180	16.18	18.18	98.11
		40	5200	16.13	18.13	
		44	5220	16.20	18.20	
		48	5240	16.27	18.27	
	802.11ac-VHT40 MCS0	38	5190	17.66	19.66	95.88
		46	5230	17.68	19.68	
	802.11ac-VHT80 MCS0	42	5210	16.25	18.25	93.21
	802.11ax-HE20 MCS0	36	5180	16.31	18.31	97.79
		40	5200	16.08	18.08	
		44	5220	16.10	18.10	
		48	5240	16.37	18.37	
	802.11ax-HE40 MCS0	38	5190	17.29	19.29	97.30
		46	5230	17.33	19.33	
	802.11ax-HE80 MCS0	42	5210	16.77	18.77	95.55

	Mode	Channel	Frequency (MHz)	Average power (dBm)	Tune-Up Limit	Duty Cycle %
5.8GHz WLAN	802.11a 6Mbps	149	5745	13.54	15.54	99.18
		157	5785	13.29	15.29	
		165	5825	13.28	15.28	
	802.11n-HT20 MCS0	149	5745	13.10	15.10	99.12
		157	5785	12.84	14.84	
		165	5825	12.84	14.84	
	802.11n-HT40 MCS0	151	5755	14.52	16.52	98.08
		159	5795	14.24	16.24	
	802.11ac-VHT20 MCS0	149	5745	13.07	15.07	98.30
		157	5785	12.83	14.83	
		165	5825	12.76	14.76	
	802.11ac-VHT40 MCS0	151	5755	14.42	16.42	96.69
		159	5795	14.17	16.17	
	802.11ac-VHT80 MCS0	155	5775	13.23	15.23	93.70
	802.11ax-HE20 MCS0	149	5745	13.20	15.20	99.33
		157	5785	12.93	14.93	
		165	5825	12.88	14.88	
	802.11ax-HE40 MCS0	151	5755	14.14	16.14	97.82
		159	5795	13.78	15.78	
	802.11ax-HE80 MCS0	155	5775	13.45	15.45	95.88

<For Body-worn / Product Specific Mode level 1>

<2.4GHz WLAN>

	Mode	Channel	Frequency (MHz)	Average power (dBm)	Tune-Up Limit	Duty Cycle %
2.4GHz WLAN	802.11b 1Mbps	1	2412	16.71	18.71	100.00
		6	2437	16.66	18.66	
		11	2462	16.91	18.91	
	802.11g 6Mbps	1	2412	15.71	17.71	99.18
		6	2437	15.61	17.61	
		11	2462	15.71	17.71	
	802.11n-HT20 MCS0	1	2412	16.76	18.76	99.12
		6	2437	16.71	18.71	
		11	2462	16.81	18.81	
	802.11ax-HE20 MCS0	1	2412	16.76	18.76	98.31
		6	2437	16.86	18.86	
		11	2462	16.81	18.81	
	802.11ax-HE40 MCS0	3	2422	16.61	18.61	96.13
		6	2437	16.56	18.56	
		9	2452	16.36	18.36	

<5GHz WLAN>

	Mode	Channel	Frequency (MHz)	Average power (dBm)	Tune-Up Limit	Duty Cycle %
5.2GHz WLAN	802.11a 6Mbps	36	5180	18.36	20.36	98.46
		40	5200	18.30	20.30	
		44	5220	18.33	20.33	
		48	5240	18.34	20.34	
	802.11n-HT20 MCS0	36	5180	18.24	20.24	98.79
		40	5200	18.18	20.18	
		44	5220	18.22	20.22	
		48	5240	18.29	20.29	
	802.11n-HT40 MCS0	38	5190	19.72	21.72	98.08
		46	5230	19.71	21.71	
	802.11ac-VHT20 MCS0	36	5180	18.19	20.19	98.11
		40	5200	18.16	20.16	
		44	5220	18.20	20.20	
		48	5240	18.28	20.28	
	802.11ac-VHT40 MCS0	38	5190	19.66	21.66	95.88
		46	5230	19.68	21.68	
	802.11ac-VHT80 MCS0	42	5210	18.26	20.26	93.21
	802.11ax-HE20 MCS0	36	5180	18.31	20.31	97.79
		40	5200	18.32	20.32	
		44	5220	18.33	20.33	
		48	5240	17.99	19.99	
	802.11ax-HE40 MCS0	38	5190	19.30	21.30	97.30
		46	5230	19.34	21.34	
	802.11ax-HE80 MCS0	42	5210	18.79	20.79	95.55

	Mode	Channel	Frequency (MHz)	Average power (dBm)	Tune-Up Limit	Duty Cycle %
5.3GHz WLAN	802.11a 6Mbps	52	5260	18.39	20.39	98.46
		56	5280	18.33	20.33	
		60	5300	18.36	20.36	
		64	5320	18.41	20.41	
	802.11n-HT20 MCS0	52	5260	18.40	20.40	98.79
		56	5280	18.32	20.32	
		60	5300	18.39	20.39	
		64	5320	18.49	20.49	
	802.11n-HT40 MCS0	54	5270	19.91	21.91	98.08
		62	5310	19.80	21.80	
	802.11ac-VHT20 MCS0	52	5260	18.36	20.36	98.11
		56	5280	18.30	20.30	
		60	5300	18.36	20.36	
		64	5320	18.47	20.47	
	802.11ac-VHT40 MCS0	54	5270	19.87	21.87	95.88
		62	5310	19.75	21.75	
	802.11ac-VHT80 MCS0	58	5290	18.23	20.23	93.21
	802.11ax-HE20 MCS0	52	5260	18.46	20.46	97.79
		56	5280	18.45	20.45	
		60	5300	18.48	20.48	
		64	5320	18.55	20.55	
	802.11ax-HE40 MCS0	54	5270	19.51	21.51	97.30
		62	5310	19.40	21.40	
	802.11ax-HE80 MCS0	58	5290	18.87	20.87	95.55

	Mode	Channel	Frequency (MHz)	Average power (dBm)	Tune-Up Limit	Duty Cycle %
5.5GHz WLAN	802.11a 6Mbps	100	5500	16.22	18.22	98.46
		116	5580	16.18	18.18	
		124	5620	16.16	18.16	
		132	5660	16.14	18.14	
		144	5720	15.91	17.91	
	802.11n-HT20 MCS0	100	5500	16.04	18.04	98.79
		116	5580	15.92	17.92	
		124	5620	16.01	18.01	
		132	5660	16.00	18.00	
		144	5720	15.42	17.42	
	802.11n-HT40 MCS0	102	5510	17.40	19.40	98.08
		110	5550	17.44	19.44	
		126	5630	17.22	19.22	
		134	5670	17.01	19.01	
		142	5710	16.83	18.83	
	802.11ac-VHT20 MCS0	100	5500	15.99	17.99	98.11
		116	5580	15.90	17.90	
		124	5620	15.96	17.96	
		132	5660	15.94	17.94	
		144	5720	15.38	17.38	
	802.11ac-VHT40 MCS0	102	5510	17.34	19.34	95.88
		110	5550	17.40	19.40	
		126	5630	17.20	19.20	
		134	5670	16.97	18.97	
		142	5710	16.79	18.79	
	802.11ac-VHT80 MCS0	106	5530	16.18	18.18	93.21
		122	5610	16.13	18.13	
		138	5690	15.92	17.92	
	802.11ax-HE20 MCS0	100	5500	16.07	18.07	97.79
		116	5580	15.89	17.89	
		124	5620	15.73	17.73	
		132	5660	15.65	17.65	
		144	5720	15.41	17.41	
	802.11ax-HE40 MCS0	102	5510	16.95	18.95	97.30
		110	5550	16.95	18.95	
		126	5630	16.85	18.85	
		134	5670	16.51	18.51	
		142	5710	16.36	18.36	
	802.11ax-HE80 MCS0	106	5530	16.84	18.84	95.55
		122	5610	16.39	18.39	
		138	5690	16.14	18.14	

	Mode	Channel	Frequency (MHz)	Average power (dBm)	Tune-Up Limit	Duty Cycle %
5.8GHz WLAN	802.11a 6Mbps	149	5745	16.54	18.54	99.18
		157	5785	16.31	18.31	
		165	5825	16.28	18.28	
	802.11n-HT20 MCS0	149	5745	16.11	18.11	99.12
		157	5785	15.84	17.84	
		165	5825	15.85	17.85	
	802.11n-HT40 MCS0	151	5755	17.52	19.52	98.08
		159	5795	17.23	19.23	
	802.11ac-VHT20 MCS0	149	5745	16.09	18.09	98.30
		157	5785	15.83	17.83	
		165	5825	15.78	17.78	
	802.11ac-VHT40 MCS0	151	5755	17.44	19.44	96.69
		159	5795	17.15	19.15	
	802.11ac-VHT80 MCS0	155	5775	16.23	18.23	93.70
	802.11ax-HE20 MCS0	149	5745	16.20	18.20	99.33
		157	5785	15.95	17.95	
		165	5825	15.88	17.88	
	802.11ax-HE40 MCS0	151	5755	17.14	19.14	97.82
		159	5795	16.79	18.79	
	802.11ax-HE80 MCS0	155	5775	16.47	18.47	95.88

<Simultaneous is activated Mode>

<For At-Head Mode_level 2>

<2.4GHz WLAN>

	Mode	Channel	Frequency (MHz)	Average power (dBm)	Tune-Up Limit	Duty Cycle %
2.4GHz WLAN	802.11b 1Mbps	1	2412	11.76	13.76	100.00
		6	2437	11.62	13.62	
		11	2462	11.94	13.94	
	802.11g 6Mbps	1	2412	10.71	12.71	99.18
		6	2437	10.55	12.55	
		11	2462	10.72	12.72	
	802.11n-HT20 MCS0	1	2412	11.80	13.80	99.12
		6	2437	11.69	13.69	
		11	2462	11.68	13.68	
	802.11ax-HE20 MCS0	1	2412	11.64	13.64	98.31
		6	2437	11.61	13.61	
		11	2462	11.70	13.70	
	802.11ax-HE40 MCS0	3	2422	11.44	13.44	96.13
		6	2437	11.23	13.23	
		9	2452	11.25	13.25	

<5GHz WLAN>

	Mode	Channel	Frequency (MHz)	Average power (dBm)	Tune-Up Limit	Duty Cycle %
5.2GHz WLAN	802.11a 6Mbps	36	5180	18.36	20.36	98.46
		40	5200	18.30	20.30	
		44	5220	18.33	20.33	
		48	5240	18.34	20.34	
	802.11n-HT20 MCS0	36	5180	18.24	20.24	98.79
		40	5200	18.18	20.18	
		44	5220	18.22	20.22	
		48	5240	18.29	20.29	
	802.11n-HT40 MCS0	38	5190	19.72	21.72	98.08
		46	5230	19.71	21.71	
	802.11ac-VHT20 MCS0	36	5180	18.19	20.19	98.11
		40	5200	18.16	20.16	
		44	5220	18.20	20.20	
		48	5240	18.28	20.28	
	802.11ac-VHT40 MCS0	38	5190	19.66	21.66	95.88
		46	5230	19.68	21.68	
	802.11ac-VHT80 MCS0	42	5210	18.26	20.26	93.21
	802.11ax-HE20 MCS0	36	5180	18.13	20.13	98.11
		40	5200	18.25	20.25	
		44	5220	18.42	20.42	
		48	5240	18.35	20.35	
	802.11ax-HE40 MCS0	38	5190	18.34	20.34	95.88
		46	5230	18.49	20.49	
	802.11ax-HE80 MCS0	42	5210	18.46	20.46	93.21

	Mode	Channel	Frequency (MHz)	Average power (dBm)	Tune-Up Limit	Duty Cycle %
5.3GHz WLAN	802.11a 6Mbps	52	5260	18.39	20.39	98.46
		56	5280	18.33	20.33	
		60	5300	18.36	20.36	
		64	5320	18.41	20.41	
	802.11n-HT20 MCS0	52	5260	18.40	20.40	98.79
		56	5280	18.32	20.32	
		60	5300	18.39	20.39	
		64	5320	18.49	20.49	
	802.11n-HT40 MCS0	54	5270	19.91	21.91	98.08
		62	5310	19.80	21.80	
	802.11ac-VHT20 MCS0	52	5260	18.36	20.36	98.11
		56	5280	18.30	20.30	
		60	5300	18.36	20.36	
		64	5320	18.47	20.47	
	802.11ac-VHT40 MCS0	54	5270	19.87	21.87	95.88
		62	5310	19.75	21.75	
	802.11ac-VHT80 MCS0	58	5290	18.23	20.23	93.21
	802.11ax-HE20 MCS0	52	5260	18.54	20.54	98.11
		56	5280	18.26	20.26	
		60	5300	18.41	20.41	
		64	5320	18.65	20.65	
	802.11ax-HE40 MCS0	54	5270	18.75	20.75	95.88
		62	5310	18.67	20.67	
	802.11ax-HE80 MCS0	58	5290	18.84	20.84	93.21

	Mode	Channel	Frequency (MHz)	Average power (dBm)	Tune-Up Limit	Duty Cycle %
5.5GHz WLAN	802.11a 6Mbps	100	5500	16.22	18.22	98.46
		116	5580	16.18	18.18	
		124	5620	16.16	18.16	
		132	5660	16.14	18.14	
		144	5720	15.91	17.91	
	802.11n-HT20 MCS0	100	5500	16.04	18.04	98.79
		116	5580	15.92	17.92	
		124	5620	16.01	18.01	
		132	5660	16.00	18.00	
		144	5720	15.42	17.42	
	802.11n-HT40 MCS0	102	5510	17.40	19.40	98.08
		110	5550	17.44	19.44	
		126	5630	17.22	19.22	
		134	5670	17.01	19.01	
		142	5710	16.83	18.83	
	802.11ac-VHT20 MCS0	100	5500	15.99	17.99	98.11
		116	5580	15.90	17.90	
		124	5620	15.96	17.96	
		132	5660	15.94	17.94	
		144	5720	15.38	17.38	
	802.11ac-VHT40 MCS0	102	5510	17.34	19.34	95.88
		110	5550	17.40	19.40	
		126	5630	17.20	19.20	
		134	5670	16.97	18.97	
		142	5710	16.79	18.79	
	802.11ac-VHT80 MCS0	106	5530	16.18	18.18	93.21
		122	5610	16.13	18.13	
		138	5690	15.92	17.92	
	802.11ax-HE20 MCS0	100	5500	16.25	18.25	98.11
		116	5580	16.84	18.84	
		124	5620	16.98	18.98	
		132	5660	16.54	18.54	
		144	5720	16.44	18.44	
	802.11ax-HE40 MCS0	102	5510	16.35	18.35	95.88
		110	5550	16.84	18.84	
		126	5630	16.66	18.66	
		134	5670	16.54	18.54	
		142	5710	16.45	18.45	
	802.11ax-HE80 MCS0	106	5530	16.12	18.12	93.21
		122	5610	16.34	18.34	
		138	5690	16.42	18.42	

	Mode	Channel	Frequency (MHz)	Average power (dBm)	Tune-Up Limit	Duty Cycle %
5.8GHz WLAN	802.11a 6Mbps	149	5745	16.54	18.54	99.18
		157	5785	16.31	18.31	
		165	5825	16.28	18.28	
	802.11n-HT20 MCS0	149	5745	16.11	18.11	99.12
		157	5785	15.84	17.84	
		165	5825	15.85	17.85	
	802.11n-HT40 MCS0	151	5755	17.52	19.52	98.08
		159	5795	17.23	19.23	
	802.11ac-VHT20 MCS0	149	5745	16.09	18.09	98.30
		157	5785	15.83	17.83	
		165	5825	15.78	17.78	
	802.11ac-VHT40 MCS0	151	5755	17.44	19.44	96.69
		159	5795	17.15	19.15	
	802.11ac-VHT80 MCS0	155	5775	16.23	18.23	93.70
	802.11ax-HE20 MCS0	149	5745	16.20	18.20	99.33
		157	5785	15.95	17.95	
		165	5825	15.88	17.88	
	802.11ax-HE40 MCS0	151	5755	17.14	19.14	97.82
		159	5795	16.79	18.79	
	802.11ax-HE80 MCS0	155	5775	16.47	18.47	95.88

<For Hotspot Mode_level 2>

<2.4GHz WLAN>

	Mode	Channel	Frequency (MHz)	Average power (dBm)	Tune-Up Limit	Duty Cycle %
2.4GHz WLAN	802.11b 1Mbps	1	2412	13.67	15.67	100.00
		6	2437	13.61	15.61	
		11	2462	13.87	15.87	
	802.11g 6Mbps	1	2412	12.67	14.67	99.18
		6	2437	12.53	14.53	
		11	2462	12.62	14.62	
	802.11n-HT20 MCS0	1	2412	13.74	15.74	99.12
		6	2437	13.76	15.76	
		11	2462	13.77	15.77	
	802.11ax-HE20 MCS0	1	2412	13.70	15.70	98.31
		6	2437	13.59	15.59	
		11	2462	13.74	15.74	
	802.11ax-HE40 MCS0	3	2422	13.45	15.45	96.13
		6	2437	13.20	15.20	
		9	2452	13.31	15.31	

<5GHz WLAN>

	Mode	Channel	Frequency (MHz)	Average power (dBm)	Tune-Up Limit	Duty Cycle %
5.2GHz WLAN	802.11a 6Mbps	36	5180	15.32	17.32	98.46
		40	5200	15.19	17.19	
		44	5220	15.26	17.26	
		48	5240	15.31	17.31	
	802.11n-HT20 MCS0	36	5180	15.16	17.16	98.79
		40	5200	15.18	17.18	
		44	5220	15.20	17.20	
		48	5240	15.22	17.22	
	802.11n-HT40 MCS0	38	5190	16.66	18.66	98.08
		46	5230	16.64	18.64	
	802.11ac-VHT20 MCS0	36	5180	15.11	17.11	98.11
		40	5200	15.10	17.10	
		44	5220	15.16	17.16	
		48	5240	15.18	17.18	
	802.11ac-VHT40 MCS0	38	5190	16.59	18.59	95.88
		46	5230	16.63	18.63	
	802.11ac-VHT80 MCS0	42	5210	15.19	17.19	93.21
	802.11ax-HE20 MCS0	36	5180	15.49	17.49	98.11
		40	5200	15.41	17.41	
		44	5220	15.24	17.24	
		48	5240	15.84	17.84	
	802.11ax-HE40 MCS0	38	5190	15.15	17.15	95.88
		46	5230	15.64	17.64	
	802.11ax-HE80 MCS0	42	5210	15.97	17.97	93.21

	Mode	Channel	Frequency (MHz)	Average power (dBm)	Tune-Up Limit	Duty Cycle %
5.8GHz WLAN	802.11a 6Mbps	149	5745	12.46	14.46	99.18
		157	5785	12.23	14.23	
		165	5825	12.22	14.22	
	802.11n-HT20 MCS0	149	5745	12.04	14.04	99.12
		157	5785	11.76	13.76	
		165	5825	11.83	13.83	
	802.11n-HT40 MCS0	151	5755	13.49	15.49	98.08
		159	5795	13.15	15.15	
	802.11ac-VHT20 MCS0	149	5745	12.00	14.00	98.30
		157	5785	11.80	13.80	
		165	5825	11.64	13.64	
	802.11ac-VHT40 MCS0	151	5755	13.37	15.37	96.69
		159	5795	13.09	15.09	
	802.11ac-VHT80 MCS0	155	5775	12.20	14.20	93.70
	802.11ax-HE20 MCS0	149	5745	12.12	14.12	99.33
		157	5785	11.92	13.92	
		165	5825	11.85	13.85	
	802.11ax-HE40 MCS0	151	5755	13.09	15.09	97.82
		159	5795	12.76	14.76	
	802.11ax-HE80 MCS0	155	5775	12.44	14.44	95.88

<For Body-worn/Product specific_Mode_level 2>

<2.4GHz WLAN>

	Mode	Channel	Frequency (MHz)	Average power (dBm)	Tune-Up Limit	Duty Cycle %
2.4GHz WLAN	802.11b 1Mbps	1	2412	15.69	17.69	100.00
		6	2437	15.57	17.57	
		11	2462	15.89	17.89	
	802.11g 6Mbps	1	2412	14.76	16.76	99.18
		6	2437	14.52	16.52	
		11	2462	14.69	16.69	
	802.11n-HT20 MCS0	1	2412	15.76	17.76	99.12
		6	2437	15.67	17.67	
		11	2462	15.81	17.81	
	802.11ax-HE20 MCS0	1	2412	15.66	17.66	98.31
		6	2437	15.65	17.65	
		11	2462	15.76	17.76	
	802.11ax-HE40 MCS0	3	2422	15.50	17.50	96.13
		6	2437	15.21	17.21	
		9	2452	15.23	17.23	

<5GHz WLAN>

	Mode	Channel	Frequency (MHz)	Average power (dBm)	Tune-Up Limit	Duty Cycle %
5.2GHz WLAN	802.11a 6Mbps	36	5180	17.29	19.29	98.46
		40	5200	17.32	19.32	
		44	5220	17.28	19.28	
		48	5240	17.25	19.25	
	802.11n-HT20 MCS0	36	5180	17.18	19.18	98.79
		40	5200	17.14	19.14	
		44	5220	17.22	19.22	
		48	5240	17.23	19.23	
	802.11n-HT40 MCS0	38	5190	18.71	20.71	98.08
		46	5230	18.70	20.70	
	802.11ac-VHT20 MCS0	36	5180	17.10	19.10	98.11
		40	5200	17.12	19.12	
		44	5220	17.08	19.08	
		48	5240	17.25	19.25	
	802.11ac-VHT40 MCS0	38	5190	18.59	20.59	95.88
		46	5230	18.60	20.60	
	802.11ac-VHT80 MCS0	42	5210	17.22	19.22	93.21
	802.11ax-HE20 MCS0	36	5180	17.52	19.52	98.11
		40	5200	17.24	19.24	
		44	5220	17.84	19.84	
		48	5240	17.65	19.65	
	802.11ax-HE40 MCS0	38	5190	17.44	19.44	95.88
		46	5230	17.68	19.68	
	802.11ax-HE80 MCS0	42	5210	17.73	19.73	93.21

	Mode	Channel	Frequency (MHz)	Average power (dBm)	Tune-Up Limit	Duty Cycle %
5.3GHz WLAN	802.11a 6Mbps	52	5260	16.30	18.30	98.46
		56	5280	16.29	18.29	
		60	5300	16.27	18.27	
		64	5320	16.31	18.31	
	802.11n-HT20 MCS0	52	5260	16.37	18.37	98.79
		56	5280	16.24	18.24	
		60	5300	16.37	18.37	
		64	5320	16.52	18.52	
	802.11n-HT40 MCS0	54	5270	17.81	19.81	98.08
		62	5310	17.80	19.80	
	802.11ac-VHT20 MCS0	52	5260	16.35	18.35	98.11
		56	5280	16.30	18.30	
		60	5300	16.25	18.25	
		64	5320	16.41	18.41	
	802.11ac-VHT40 MCS0	54	5270	17.75	19.75	95.88
		62	5310	17.67	19.67	
	802.11ac-VHT80 MCS0	58	5290	16.18	18.18	93.21
	802.11ax-HE20 MCS0	52	5260	16.01	18.01	98.11
		56	5280	16.24	18.24	
		60	5300	16.58	18.58	
		64	5320	16.18	18.18	
	802.11ax-HE40 MCS0	54	5270	16.48	18.48	95.88
		62	5310	16.74	18.74	
	802.11ax-HE80 MCS0	58	5290	16.85	18.85	93.21

	Mode	Channel	Frequency (MHz)	Average power (dBm)	Tune-Up Limit	Duty Cycle %
5.5GHz WLAN	802.11a 6Mbps	100	5500	14.17	16.17	98.46
		116	5580	14.12	16.12	
		124	5620	14.15	16.15	
		132	5660	14.10	16.10	
		144	5720	13.90	15.90	
	802.11n-HT20 MCS0	100	5500	13.98	15.98	98.79
		116	5580	13.87	15.87	
		124	5620	13.91	15.91	
		132	5660	13.93	15.93	
		144	5720	13.39	15.39	
	802.11n-HT40 MCS0	102	5510	15.34	17.34	98.08
		110	5550	15.38	17.38	
		126	5630	15.19	17.19	
		134	5670	15.00	17.00	
		142	5710	14.79	16.79	
	802.11ac-VHT20 MCS0	100	5500	13.98	15.98	98.11
		116	5580	13.88	15.88	
		124	5620	13.84	15.84	
		132	5660	13.93	15.93	
		144	5720	13.33	15.33	
	802.11ac-VHT40 MCS0	102	5510	15.27	17.27	95.88
		110	5550	15.32	17.32	
		126	5630	15.14	17.14	
		134	5670	14.91	16.91	
		142	5710	14.72	16.72	
	802.11ac-VHT80 MCS0	106	5530	14.12	16.12	93.21
		122	5610	14.11	16.11	
		138	5690	13.82	15.82	
	802.11ax-HE20 MCS0	100	5500	14.25	16.25	98.11
		116	5580	14.64	16.64	
		124	5620	14.95	16.95	
		132	5660	14.32	16.32	
		144	5720	14.41	16.41	
	802.11ax-HE40 MCS0	102	5510	14.52	16.52	95.88
		110	5550	14.35	16.35	
		126	5630	14.87	16.87	
		134	5670	14.64	16.64	
		142	5710	14.94	16.94	
	802.11ax-HE80 MCS0	106	5530	14.21	16.21	93.21
		122	5610	14.32	16.32	
		138	5690	13.54	15.54	

	Mode	Channel	Frequency (MHz)	Average power (dBm)	Tune-Up Limit	Duty Cycle %
5.8GHz WLAN	802.11a 6Mbps	149	5745	14.51	16.51	99.18
		157	5785	14.22	16.22	
		165	5825	14.24	16.24	
	802.11n-HT20 MCS0	149	5745	14.04	16.04	99.12
		157	5785	13.76	15.76	
		165	5825	13.81	15.81	
	802.11n-HT40 MCS0	151	5755	15.47	17.47	98.08
		159	5795	15.17	17.17	
	802.11ac-VHT20 MCS0	149	5745	14.07	16.07	98.30
		157	5785	13.72	15.72	
		165	5825	13.70	15.70	
	802.11ac-VHT40 MCS0	151	5755	15.38	17.38	96.69
		159	5795	15.14	17.14	
	802.11ac-VHT80 MCS0	155	5775	14.18	16.18	93.70
	802.11ax-HE20 MCS0	149	5745	14.18	16.18	99.33
		157	5785	13.88	15.88	
		165	5825	13.78	15.78	
	802.11ax-HE40 MCS0	151	5755	15.11	17.11	97.82
		159	5795	14.69	16.69	
	802.11ax-HE80 MCS0	155	5775	14.45	16.45	95.88

<For At-Head Mode level 3>

<2.4GHz WLAN>

	Mode	Channel	Frequency (MHz)	Average power (dBm)	Tune-Up Limit	Duty Cycle %
2.4GHz WLAN	802.11b 1Mbps	1	2412	9.71	11.71	100.00
		6	2437	9.66	11.66	
		11	2462	9.96	11.96	
	802.11g 6Mbps	1	2412	8.76	10.76	99.18
		6	2437	8.56	10.56	
		11	2462	8.71	10.71	
	802.11n-HT20 MCS0	1	2412	9.81	11.81	99.12
		6	2437	9.76	11.76	
		11	2462	9.81	11.81	
	802.11ax-HE20 MCS0	1	2412	9.71	11.71	98.31
		6	2437	9.86	11.86	
		11	2462	9.81	11.81	
	802.11ax-HE40 MCS0	3	2422	9.61	11.61	96.13
		6	2437	9.46	11.46	
		9	2452	9.36	11.36	

<5GHz WLAN>

	Mode	Channel	Frequency (MHz)	Average power (dBm)	Tune-Up Limit	Duty Cycle %
5.2GHz WLAN	802.11a 6Mbps	36	5180	16.35	18.35	98.46
		40	5200	16.30	18.30	
		44	5220	16.34	18.34	
		48	5240	16.33	18.33	
	802.11n-HT20 MCS0	36	5180	16.24	18.24	98.79
		40	5200	16.18	18.18	
		44	5220	16.23	18.23	
		48	5240	16.29	18.29	
	802.11n-HT40 MCS0	38	5190	17.73	19.73	98.08
		46	5230	17.72	19.72	
	802.11ac-VHT20 MCS0	36	5180	16.18	18.18	98.11
		40	5200	16.13	18.13	
		44	5220	16.20	18.20	
		48	5240	16.27	18.27	
	802.11ac-VHT40 MCS0	38	5190	17.66	19.66	95.88
		46	5230	17.68	19.68	
	802.11ac-VHT80 MCS0	42	5210	16.25	18.25	93.21
	802.11ax-HE20 MCS0	36	5180	16.31	18.31	97.79
		40	5200	16.08	18.08	
		44	5220	16.10	18.10	
		48	5240	16.37	18.37	
	802.11ax-HE40 MCS0	38	5190	17.29	19.29	97.30
		46	5230	17.33	19.33	
	802.11ax-HE80 MCS0	42	5210	16.77	18.77	95.55

	Mode	Channel	Frequency (MHz)	Average power (dBm)	Tune-Up Limit	Duty Cycle %
5.3GHz WLAN	802.11a 6Mbps	52	5260	16.38	18.38	98.46
		56	5280	16.34	18.34	
		60	5300	16.36	18.36	
		64	5320	16.40	18.40	
	802.11n-HT20 MCS0	52	5260	16.41	18.41	98.79
		56	5280	16.33	18.33	
		60	5300	16.41	18.41	
		64	5320	16.51	18.51	
	802.11n-HT40 MCS0	54	5270	17.92	19.92	98.08
		62	5310	17.80	19.80	
	802.11ac-VHT20 MCS0	52	5260	16.36	18.36	98.11
		56	5280	16.30	18.30	
		60	5300	16.35	18.35	
		64	5320	16.44	18.44	
	802.11ac-VHT40 MCS0	54	5270	17.85	19.85	95.88
		62	5310	17.74	19.74	
	802.11ac-VHT80 MCS0	58	5290	16.23	18.23	93.21
	802.11ax-HE20 MCS0	52	5260	16.44	18.44	97.79
		56	5280	16.37	18.37	
		60	5300	16.47	18.47	
		64	5320	16.53	18.53	
	802.11ax-HE40 MCS0	54	5270	17.50	19.50	97.30
		62	5310	17.39	19.39	
	802.11ax-HE80 MCS0	58	5290	16.87	18.87	95.55

	Mode	Channel	Frequency (MHz)	Average power (dBm)	Tune-Up Limit	Duty Cycle %
5.5GHz WLAN	802.11a 6Mbps	100	5500	16.22	18.22	98.46
		116	5580	16.18	18.18	
		124	5620	16.16	18.16	
		132	5660	16.14	18.14	
		144	5720	15.91	17.91	
	802.11n-HT20 MCS0	100	5500	16.04	18.04	98.79
		116	5580	15.92	17.92	
		124	5620	16.01	18.01	
		132	5660	16.00	18.00	
		144	5720	15.42	17.42	
	802.11n-HT40 MCS0	102	5510	17.40	19.40	98.08
		110	5550	17.44	19.44	
		126	5630	17.22	19.22	
		134	5670	17.01	19.01	
		142	5710	16.83	18.83	
	802.11ac-VHT20 MCS0	100	5500	15.99	17.99	98.11
		116	5580	15.90	17.90	
		124	5620	15.96	17.96	
		132	5660	15.94	17.94	
		144	5720	15.38	17.38	
	802.11ac-VHT40 MCS0	102	5510	17.34	19.34	95.88
		110	5550	17.40	19.40	
		126	5630	17.20	19.20	
		134	5670	16.97	18.97	
		142	5710	16.79	18.79	
	802.11ac-VHT80 MCS0	106	5530	16.18	18.18	93.21
		122	5610	16.13	18.13	
		138	5690	15.92	17.92	
	802.11ax-HE20 MCS0	100	5500	16.07	18.07	
		116	5580	15.89	17.89	
		124	5620	15.73	17.73	
		132	5660	15.65	17.65	
		144	5720	15.41	17.41	
	802.11ax-HE40 MCS0	102	5510	16.95	18.95	97.30
		110	5550	16.95	18.95	
		126	5630	16.85	18.85	
		134	5670	16.51	18.51	
		142	5710	16.36	18.36	
	802.11ax-HE80 MCS0	106	5530	16.84	18.84	95.55
		122	5610	16.39	18.39	
		138	5690	16.14	18.14	

	Mode	Channel	Frequency (MHz)	Average power (dBm)	Tune-Up Limit	Duty Cycle %
5.8GHz WLAN	802.11a 6Mbps	149	5745	16.54	18.54	99.18
		157	5785	16.31	18.31	
		165	5825	16.28	18.28	
	802.11n-HT20 MCS0	149	5745	16.11	18.11	99.12
		157	5785	15.84	17.84	
		165	5825	15.85	17.85	
	802.11n-HT40 MCS0	151	5755	17.52	19.52	98.08
		159	5795	17.23	19.23	
	802.11ac-VHT20 MCS0	149	5745	16.09	18.09	98.30
		157	5785	15.83	17.83	
		165	5825	15.78	17.78	
	802.11ac-VHT40 MCS0	151	5755	17.44	19.44	96.69
		159	5795	17.15	19.15	
	802.11ac-VHT80 MCS0	155	5775	16.23	18.23	93.70
	802.11ax-HE20 MCS0	149	5745	16.20	18.20	99.33
		157	5785	15.95	17.95	
		165	5825	15.88	17.88	
	802.11ax-HE40 MCS0	151	5755	17.14	19.14	97.82
		159	5795	16.79	18.79	
	802.11ax-HE80 MCS0	155	5775	16.47	18.47	95.88

<For Hotspot Mode_level 3>

<2.4GHz WLAN>

	Mode	Channel	Frequency (MHz)	Average power (dBm)	Tune-Up Limit	Duty Cycle %
2.4GHz WLAN	802.11b 1Mbps	1	2412	10.71	12.71	100.00
		6	2437	10.66	12.66	
		11	2462	10.91	12.91	
	802.11g 6Mbps	1	2412	9.76	11.76	99.18
		6	2437	9.56	11.56	
		11	2462	9.71	11.71	
	802.11n-HT20 MCS0	1	2412	10.81	12.81	99.12
		6	2437	10.76	12.76	
		11	2462	10.81	12.81	
	802.11ax-HE20 MCS0	1	2412	10.71	12.71	98.31
		6	2437	10.86	12.86	
		11	2462	10.81	12.81	
	802.11ax-HE40 MCS0	3	2422	10.61	12.61	96.13
		6	2437	10.46	12.46	
		9	2452	10.36	12.36	

<5GHz WLAN>

	Mode	Channel	Frequency (MHz)	Average power (dBm)	Tune-Up Limit	Duty Cycle %
5.2GHz WLAN	802.11a 6Mbps	36	5180	12.37	14.37	98.46
		40	5200	12.28	14.28	
		44	5220	12.35	14.35	
		48	5240	12.35	14.35	
	802.11n-HT20 MCS0	36	5180	12.24	14.24	98.79
		40	5200	12.20	14.20	
		44	5220	12.23	14.23	
		48	5240	12.30	14.30	
	802.11n-HT40 MCS0	38	5190	13.75	15.75	98.08
		46	5230	13.73	15.73	
	802.11ac-VHT20 MCS0	36	5180	12.16	14.16	98.11
		40	5200	12.15	14.15	
		44	5220	12.18	14.18	
		48	5240	12.26	14.26	
	802.11ac-VHT40 MCS0	38	5190	13.63	15.63	95.88
		46	5230	13.66	15.66	
	802.11ac-VHT80 MCS0	42	5210	12.20	14.20	93.21
	802.11ax-HE20 MCS0	36	5180	12.29	14.29	97.79
		40	5200	12.19	14.19	
		44	5220	12.29	14.29	
		48	5240	12.34	14.34	
	802.11ax-HE40 MCS0	38	5190	13.27	15.27	97.30
		46	5230	13.31	15.31	
	802.11ax-HE80 MCS0	42	5210	12.76	14.76	95.55

	Mode	Channel	Frequency (MHz)	Average power (dBm)	Tune-Up Limit	Duty Cycle %
5.8GHz WLAN	802.11a 6Mbps	149	5745	10.54	12.54	99.18
		157	5785	10.29	12.29	
		165	5825	10.26	12.26	
	802.11n-HT20 MCS0	149	5745	10.09	12.09	99.12
		157	5785	9.82	11.82	
		165	5825	9.83	11.83	
	802.11n-HT40 MCS0	151	5755	11.52	13.52	98.08
		159	5795	11.24	13.24	
	802.11ac-VHT20 MCS0	149	5745	10.07	12.07	98.30
		157	5785	9.80	11.80	
		165	5825	9.73	11.73	
	802.11ac-VHT40 MCS0	151	5755	11.42	13.42	96.69
		159	5795	11.16	13.16	
	802.11ac-VHT80 MCS0	155	5775	10.22	12.22	93.70
	802.11ax-HE20 MCS0	149	5745	10.20	12.20	99.33
		157	5785	9.92	11.92	
		165	5825	9.87	11.87	
	802.11ax-HE40 MCS0	151	5755	11.14	13.14	97.82
		159	5795	10.78	12.78	
	802.11ax-HE80 MCS0	155	5775	10.46	12.46	95.88

<For Body-worn Mode level 3>

<2.4GHz WLAN>

	Mode	Channel	Frequency (MHz)	Average power (dBm)	Tune-Up Limit	Duty Cycle %
2.4GHz WLAN	802.11b 1Mbps	1	2412	13.71	15.71	100.00
		6	2437	13.66	15.66	
		11	2462	13.91	15.91	
	802.11g 6Mbps	1	2412	12.71	14.71	99.18
		6	2437	12.56	14.56	
		11	2462	12.71	14.71	
	802.11n-HT20 MCS0	1	2412	13.81	15.81	99.12
		6	2437	13.76	15.76	
		11	2462	13.81	15.81	
	802.11ax-HE20 MCS0	1	2412	13.76	15.76	98.31
		6	2437	13.86	15.86	
		11	2462	13.81	15.81	
	802.11ax-HE40 MCS0	3	2422	13.61	15.61	96.13
		6	2437	13.51	15.51	
		9	2452	13.36	15.36	

<5GHz WLAN>

	Mode	Channel	Frequency (MHz)	Average power (dBm)	Tune-Up Limit	Duty Cycle %
5.2GHz WLAN	802.11a 6Mbps	36	5180	15.36	17.36	98.46
		40	5200	15.32	17.32	
		44	5220	15.36	17.36	
		48	5240	15.34	17.34	
	802.11n-HT20 MCS0	36	5180	15.26	17.26	98.79
		40	5200	15.20	17.20	
		44	5220	15.25	17.25	
		48	5240	15.31	17.31	
	802.11n-HT40 MCS0	38	5190	15.76	17.76	98.08
		46	5230	15.74	17.74	
	802.11ac-VHT20 MCS0	36	5180	15.17	17.17	98.11
		40	5200	15.13	17.13	
		44	5220	15.17	17.17	
		48	5240	15.25	17.25	
	802.11ac-VHT40 MCS0	38	5190	16.65	18.65	95.88
		46	5230	16.66	18.66	
	802.11ac-VHT80 MCS0	42	5210	15.24	17.24	93.21
	802.11ax-HE20 MCS0	36	5180	15.30	17.30	97.79
		40	5200	15.21	17.21	
		44	5220	15.28	17.28	
		48	5240	15.36	17.36	
	802.11ax-HE40 MCS0	38	5190	16.28	18.28	97.30
		46	5230	16.35	18.35	
	802.11ax-HE80 MCS0	42	5210	15.78	17.78	95.55

	Mode	Channel	Frequency (MHz)	Average power (dBm)	Tune-Up Limit	Duty Cycle %
5.3GHz WLAN	802.11a 6Mbps	52	5260	15.38	17.38	98.46
		56	5280	15.33	17.33	
		60	5300	15.36	17.36	
		64	5320	15.38	17.38	
	802.11n-HT20 MCS0	52	5260	15.42	17.42	98.79
		56	5280	15.31	17.31	
		60	5300	15.42	17.42	
		64	5320	15.56	17.56	
	802.11n-HT40 MCS0	54	5270	16.83	18.83	98.08
		62	5310	16.82	18.82	
	802.11ac-VHT20 MCS0	52	5260	15.36	17.36	98.11
		56	5280	15.30	17.30	
		60	5300	15.34	17.34	
		64	5320	15.42	17.42	
	802.11ac-VHT40 MCS0	54	5270	16.82	18.82	95.88
		62	5310	16.74	18.74	
	802.11ac-VHT80 MCS0	58	5290	15.21	17.21	93.21
	802.11ax-HE20 MCS0	52	5260	15.44	17.44	97.79
		56	5280	15.33	17.33	
		60	5300	15.46	17.46	
		64	5320	15.52	17.52	
	802.11ax-HE40 MCS0	54	5270	16.51	18.51	97.30
		62	5310	16.40	18.40	
	802.11ax-HE80 MCS0	58	5290	15.89	17.89	95.55

	Mode	Channel	Frequency (MHz)	Average power (dBm)	Tune-Up Limit	Duty Cycle %
5.5GHz WLAN	802.11a 6Mbps	100	5500	12.21	14.21	98.46
		116	5580	12.20	14.20	
		124	5620	12.15	14.15	
		132	5660	12.12	14.12	
		144	5720	11.90	13.90	
	802.11n-HT20 MCS0	100	5500	12.06	14.06	98.79
		116	5580	11.95	13.95	
		124	5620	12.00	14.00	
		132	5660	12.00	14.00	
		144	5720	11.44	13.44	
	802.11n-HT40 MCS0	102	5510	13.42	15.42	98.08
		110	5550	13.45	15.45	
		126	5630	13.25	15.25	
		134	5670	13.01	15.01	
		142	5710	12.85	14.85	
	802.11ac-VHT20 MCS0	100	5500	11.98	13.98	98.11
		116	5580	11.88	13.88	
		124	5620	11.93	13.93	
		132	5660	11.94	13.94	
		144	5720	11.37	13.37	
	802.11ac-VHT40 MCS0	102	5510	13.33	15.33	95.88
		110	5550	13.39	15.39	
		126	5630	13.26	15.26	
		134	5670	12.93	14.93	
		142	5710	12.75	14.75	
	802.11ac-VHT80 MCS0	106	5530	12.17	14.17	93.21
		122	5610	12.14	14.14	
		138	5690	11.90	13.90	
	802.11ax-HE20 MCS0	100	5500	12.05	14.05	97.79
		116	5580	11.91	13.91	
		124	5620	11.85	13.85	
		132	5660	11.76	13.76	
		144	5720	11.44	13.44	
	802.11ax-HE40 MCS0	102	5510	12.96	14.96	97.30
		110	5550	12.95	14.95	
		126	5630	12.89	14.89	
		134	5670	12.53	14.53	
		142	5710	12.33	14.33	
	802.11ax-HE80 MCS0	106	5530	12.56	14.56	95.55
		122	5610	12.40	14.40	
		138	5690	12.27	14.27	

	Mode	Channel	Frequency (MHz)	Average power (dBm)	Tune-Up Limit	Duty Cycle %
5.8GHz WLAN	802.11a 6Mbps	149	5745	14.54	16.54	99.18
		157	5785	14.30	16.30	
		165	5825	14.28	16.28	
	802.11n-HT20 MCS0	149	5745	14.10	16.10	99.12
		157	5785	13.84	15.84	
		165	5825	13.83	15.83	
	802.11n-HT40 MCS0	151	5755	15.52	17.52	98.08
		159	5795	15.23	17.23	
	802.11ac-VHT20 MCS0	149	5745	14.08	16.08	98.30
		157	5785	13.83	15.83	
		165	5825	13.76	15.76	
	802.11ac-VHT40 MCS0	151	5755	15.42	17.42	96.69
		159	5795	15.15	17.15	
	802.11ac-VHT80 MCS0	155	5775	14.23	16.23	93.70
	802.11ax-HE20 MCS0	149	5745	14.20	16.20	99.33
		157	5785	13.93	15.93	
		165	5825	13.88	15.88	
	802.11ax-HE40 MCS0	151	5755	15.44	17.44	97.82
		159	5795	14.77	16.77	
	802.11ax-HE80 MCS0	155	5775	14.45	16.45	95.88

<For Product Specific Mode_level 3>

<2.4GHz WLAN>

	Mode	Channel	Frequency (MHz)	Average power (dBm)	Tune-Up Limit	Duty Cycle %
2.4GHz WLAN	802.11b 1Mbps	1	2412	12.71	14.71	100.00
		6	2437	12.66	14.66	
		11	2462	12.91	14.91	
	802.11g 6Mbps	1	2412	11.76	13.76	99.18
		6	2437	11.56	13.56	
		11	2462	11.71	13.71	
	802.11n-HT20 MCS0	1	2412	12.81	14.81	99.12
		6	2437	12.76	14.76	
		11	2462	12.81	14.81	
	802.11ax-HE20 MCS0	1	2412	12.76	14.76	98.31
		6	2437	12.86	14.86	
		11	2462	12.81	14.81	
	802.11ax-HE40 MCS0	3	2422	12.61	14.61	96.13
		6	2437	12.51	14.51	
		9	2452	12.36	14.36	

<5GHz WLAN>

	Mode	Channel	Frequency (MHz)	Average power (dBm)	Tune-Up Limit	Duty Cycle %
5.2GHz WLAN	802.11a 6Mbps	36	5180	14.36	16.36	98.46
		40	5200	14.32	16.32	
		44	5220	14.36	16.36	
		48	5240	14.34	16.34	
	802.11n-HT20 MCS0	36	5180	14.26	16.26	98.79
		40	5200	14.20	16.20	
		44	5220	14.25	16.25	
		48	5240	14.31	16.31	
	802.11n-HT40 MCS0	38	5190	15.76	17.76	98.08
		46	5230	15.74	17.74	
	802.11ac-VHT20 MCS0	36	5180	14.17	16.17	98.11
		40	5200	14.13	16.13	
		44	5220	14.17	16.17	
		48	5240	14.25	16.25	
	802.11ac-VHT40 MCS0	38	5190	15.65	17.65	95.88
		46	5230	15.66	17.66	
	802.11ac-VHT80 MCS0	42	5210	14.24	16.24	93.21
	802.11ax-HE20 MCS0	36	5180	14.30	16.30	97.79
		40	5200	14.13	16.13	
		44	5220	14.28	16.28	
		48	5240	14.36	16.36	
	802.11ax-HE40 MCS0	38	5190	15.28	17.28	97.30
		46	5230	15.35	17.35	
	802.11ax-HE80 MCS0	42	5210	14.78	16.78	95.55

	Mode	Channel	Frequency (MHz)	Average power (dBm)	Tune-Up Limit	Duty Cycle %
5.3GHz WLAN	802.11a 6Mbps	52	5260	14.38	16.38	98.46
		56	5280	14.33	16.33	
		60	5300	14.36	16.36	
		64	5320	14.38	16.38	
	802.11n-HT20 MCS0	52	5260	14.42	16.42	98.79
		56	5280	14.31	16.31	
		60	5300	14.42	16.42	
		64	5320	14.56	16.56	
	802.11n-HT40 MCS0	54	5270	15.83	17.83	98.08
		62	5310	15.82	17.82	
	802.11ac-VHT20 MCS0	52	5260	14.36	16.36	98.11
		56	5280	14.30	16.30	
		60	5300	14.34	16.34	
		64	5320	14.42	16.42	
	802.11ac-VHT40 MCS0	54	5270	15.82	17.82	95.88
		62	5310	15.74	17.74	
	802.11ac-VHT80 MCS0	58	5290	14.21	16.21	93.21
	802.11ax-HE20 MCS0	52	5260	14.44	16.44	97.79
		56	5280	14.35	16.35	
		60	5300	14.46	16.46	
		64	5320	14.52	16.52	
	802.11ax-HE40 MCS0	54	5270	15.51	17.51	97.30
		62	5310	15.40	17.40	
	802.11ax-HE80 MCS0	58	5290	14.89	16.89	95.55

	Mode	Channel	Frequency (MHz)	Average power (dBm)	Tune-Up Limit	Duty Cycle %
5.5GHz WLAN	802.11a 6Mbps	100	5500	12.21	14.21	98.46
		116	5580	12.20	14.20	
		124	5620	12.15	14.15	
		132	5660	12.12	14.12	
		144	5720	11.90	13.90	
	802.11n-HT20 MCS0	100	5500	12.06	14.06	98.79
		116	5580	11.95	13.95	
		124	5620	12.00	14.00	
		132	5660	12.00	14.00	
		144	5720	11.44	13.44	
	802.11n-HT40 MCS0	102	5510	13.42	15.42	98.08
		110	5550	13.45	15.45	
		126	5630	13.25	15.25	
		134	5670	13.01	15.01	
		142	5710	12.85	14.85	
	802.11ac-VHT20 MCS0	100	5500	11.98	13.98	98.11
		116	5580	11.88	13.88	
		124	5620	11.93	13.93	
		132	5660	11.94	13.94	
		144	5720	11.37	13.37	
	802.11ac-VHT40 MCS0	102	5510	13.33	15.33	95.88
		110	5550	13.39	15.39	
		126	5630	13.26	15.26	
		134	5670	12.93	14.93	
		142	5710	12.75	14.75	
	802.11ac-VHT80 MCS0	106	5530	12.17	14.17	93.21
		122	5610	12.14	14.14	
		138	5690	11.90	13.90	
	802.11ax-HE20 MCS0	100	5500	12.05	14.05	97.79
		116	5580	11.91	13.91	
		124	5620	11.85	13.85	
		132	5660	11.76	13.76	
		144	5720	11.44	13.44	
	802.11ax-HE40 MCS0	102	5510	12.96	14.96	97.30
		110	5550	12.95	14.95	
		126	5630	12.89	14.89	
		134	5670	12.53	14.53	
		142	5710	12.33	14.33	
	802.11ax-HE80 MCS0	106	5530	12.56	14.56	95.55
		122	5610	12.40	14.40	
		138	5690	12.27	14.27	

	Mode	Channel	Frequency (MHz)	Average power (dBm)	Tune-Up Limit	Duty Cycle %
5.8GHz WLAN	802.11a 6Mbps	149	5745	12.54	14.54	99.18
		157	5785	12.29	14.29	
		165	5825	12.27	14.27	
	802.11n-HT20 MCS0	149	5745	12.10	14.10	99.12
		157	5785	11.83	13.83	
		165	5825	11.83	13.83	
	802.11n-HT40 MCS0	151	5755	13.52	15.52	98.08
		159	5795	13.24	15.24	
	802.11ac-VHT20 MCS0	149	5745	12.09	14.09	98.30
		157	5785	11.81	13.81	
		165	5825	11.74	13.74	
	802.11ac-VHT40 MCS0	151	5755	13.42	15.42	96.69
		159	5795	13.16	15.16	
	802.11ac-VHT80 MCS0	155	5775	12.22	14.22	93.70
	802.11ax-HE20 MCS0	149	5745	12.20	14.20	99.33
		157	5785	11.93	13.93	
		165	5825	11.87	13.87	
	802.11ax-HE40 MCS0	151	5755	13.14	15.14	97.82
		159	5795	12.77	14.77	
	802.11ax-HE80 MCS0	155	5775	12.45	14.45	95.88

<2.4GHz Bluetooth>

<Chain 0>

<For Head mode>

Mode	Channel	Frequency (MHz)	Average power (dBm)			Tune-up Limit(dBm)		
			1Mbps	2Mbps	3Mbps	1Mbps	2Mbps	3Mbps
BR / EDR	CH 00	2402	7.66	5.16	5.06	9.66	7.16	7.06
	CH 39	2441	8.61	6.31	6.41	10.61	8.31	8.41
	CH 78	2480	6.92	4.72	4.72	8.92	6.72	6.72

Mode	Channel	Frequency (MHz)	Average power (dBm)		Tune-up Limit(dBm)	
			1Mbps	2Mbps	1Mbps	2Mbps
LE	CH 00	2402	5.7	5.8	7.7	7.8
	CH 19	2440	7.2	7.3	9.2	9.3
	CH 39	2480	5.1	5.3	7.1	7.3

<For Hotspot/Body-worn/extremity mode>

Mode	Channel	Frequency (MHz)	Average power (dBm)			Tune-up Limit(dBm)		
			1Mbps	2Mbps	3Mbps	1Mbps	2Mbps	3Mbps
BR / EDR	CH 00	2402	13.05	10.55	10.45	15.05	12.55	12.45
	CH 39	2441	14.07	11.77	11.87	16.07	13.77	13.87
	CH 78	2480	12.10	9.90	9.90	14.10	11.90	11.90

Mode	Channel	Frequency (MHz)	Average power (dBm)		Tune-up Limit(dBm)	
			1Mbps	2Mbps	1Mbps	2Mbps
LE	CH 00	2402	7.70	7.80	9.70	9.80
	CH 19	2440	9.20	9.30	11.20	11.30
	CH 39	2480	7.10	7.30	9.10	9.30

BT Duty cycle

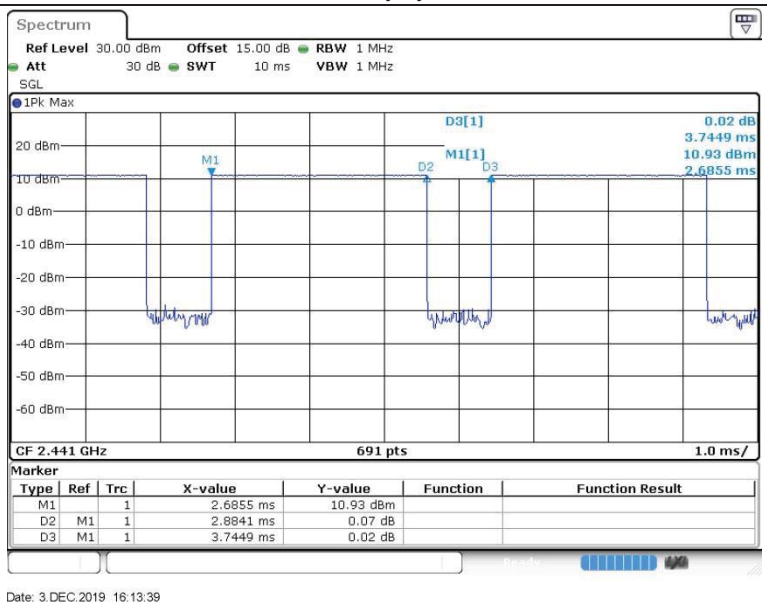

General Note:
For 2.4GHz Bluetooth SAR testing was selected 1Mbps due to its highest average power and duty cycle is 77.01% considered in SAR testing.

<Chain 1>

Mode	Channel	Frequency (MHz)	Average power (dBm)			Tune-up Limit(dBm)		
			1Mbps	2Mbps	3Mbps	1Mbps	2Mbps	3Mbps
BR / EDR	CH 00	2402	7.72	4.12	4.12	9.72	6.12	6.12
	CH 39	2441	8.52	5.12	5.12	10.52	7.12	7.12
	CH 78	2480	6.84	3.64	3.64	8.84	5.64	5.64

Mode	Channel	Frequency (MHz)	Average power (dBm)		Tune-up Limit(dBm)	
			1Mbps	2Mbps	1Mbps	2Mbps
LE	CH 00	2402	6.20	6.30	8.20	8.30
	CH 19	2440	7.80	7.90	9.80	9.90
	CH 39	2480	6.40	6.50	8.40	8.50

BT Duty cycle

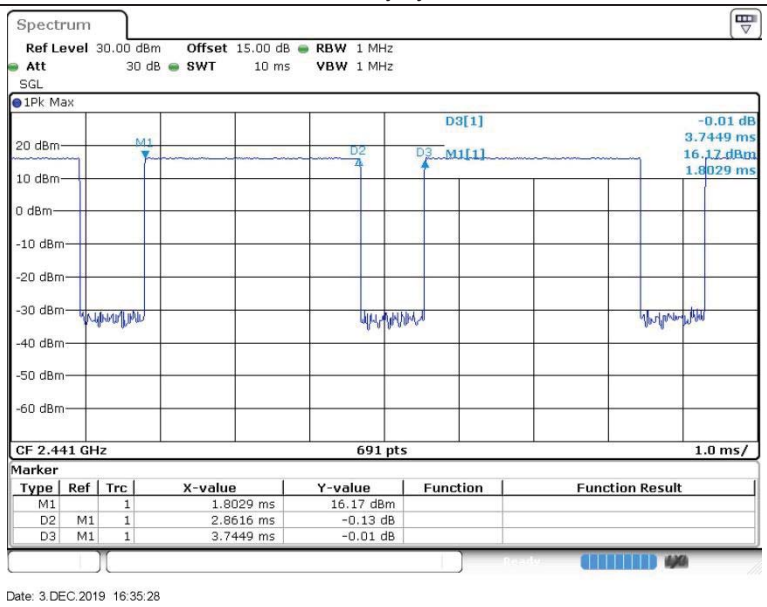

General Note:

For 2.4GHz Bluetooth SAR testing was selected 1Mbps due to its highest average power and duty cycle is 76.41% considered in SAR testing.

16. Antenna Location

<Mobile Phone>

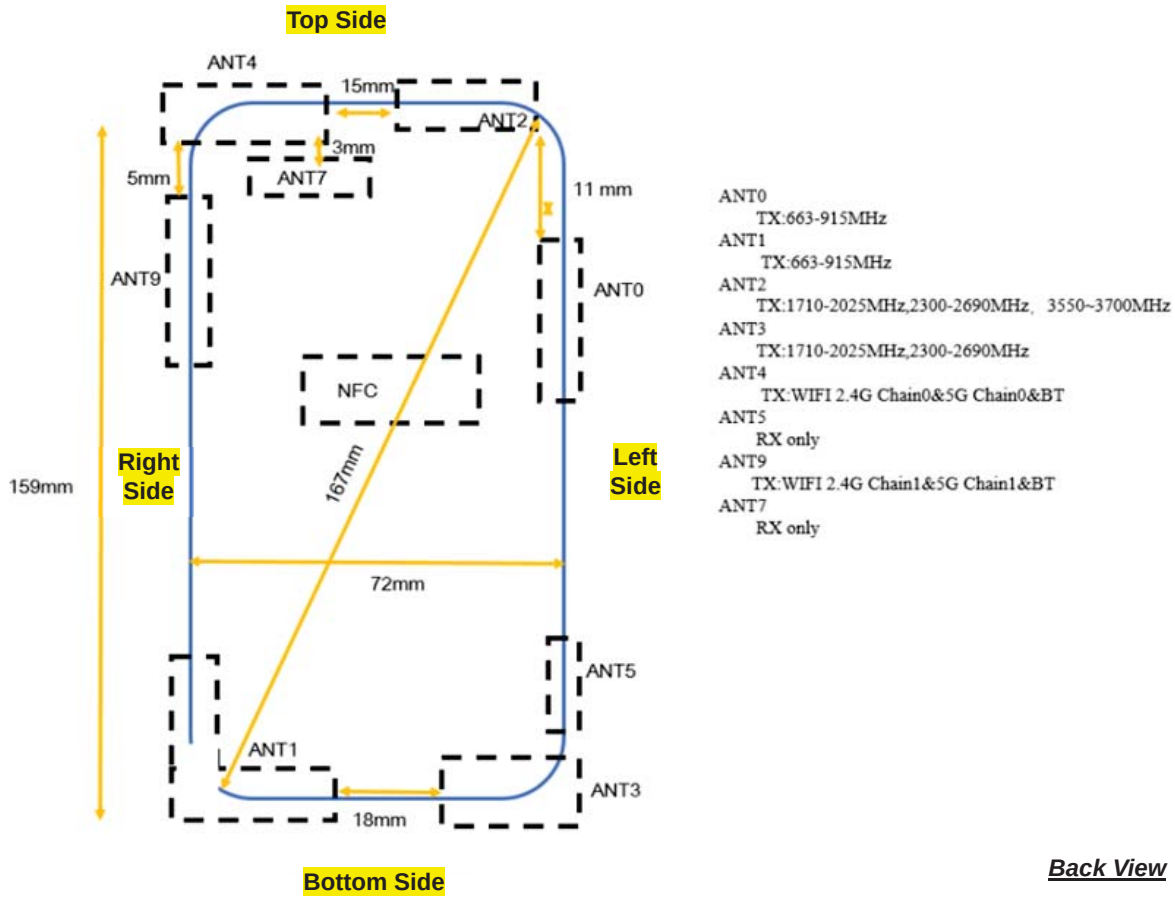

Antennas Description	
WWAN UAT	ANT 0 / ANT 2
WWAN LAT	ANT 1 / ANT 3

Distance of the Antenna to the EUT surface/edge						
Antennas	Back	Front	Top Side	Bottom Side	Right Side	Left Side
WWAN UAT	≤ 25mm	≤ 25mm	≤ 25mm	>25mm	≤ 25mm	≤ 25mm
WWAN LAT	≤ 25mm	≤ 25mm	>25mm	≤ 25mm	≤ 25mm	≤ 25mm
BT&WLAN	≤ 25mm	≤ 25mm	≤ 25mm	>25mm	≤ 25mm	>25mm

Positions for SAR tests; Hotspot mode						
Antennas	Back	Front	Top Side	Bottom Side	Right Side	Left Side
WWAN UAT	Yes	Yes	Yes	No	Yes	Yes
WWAN LAT	Yes	Yes	No	Yes	Yes	Yes
BT&WLAN	Yes	Yes	Yes	No	Yes	No

General Note:

1. Referring to KDB 941225 D06 v02r01, when the overall device length and width are ≥ 9cm*5cm, the test distance is 10 mm. SAR must be measured for all sides and surfaces with a transmitting antenna located within 25mm from that surface or edge

17. SAR Test Results

17.1 Head SAR

General Note:

1. Per KDB 447498 D01v06, the reported SAR is the measured SAR value adjusted for maximum tune-up tolerance.
   a. Tune-up scaling Factor = tune-up limit power (mW) / EUT RF power (mW), where tune-up limit is the maximum rated power among all production units.
   b. For SAR testing of WLAN signal with non-100% duty cycle, the measured SAR is scaled-up by the duty cycle scaling factor which is equal to "1/(duty cycle)"
   c. For WWAN/Bluetooth: Reported SAR(W/kg)= Measured SAR(W/kg)*Tune-up Scaling Factor
   d. For WLAN: Reported SAR(W/kg)= Measured SAR(W/kg)* Duty Cycle scaling factor * Tune-up scaling factor
   e. For TDD LTE SAR measurement, the duty cycle 1:1.59 (62.9 %) was used perform testing and considering the theoretical duty cycle of 63.3% for extended cyclic prefix in the uplink, and the theoretical duty cycle of 62.9% for normal cyclic prefix in uplink, a scaling factor of extended cyclic prefix 63.3%/62.9% = 1.006 is applied to scale-up the measured SAR result. The Reported TDD LTE SAR = measured SAR (W/kg)* Tune-up Scaling Factor* scaling factor for extended cyclic prefix.
2. Per KDB 447498 D01v06, for each exposure position, testing of other required channels within the operating mode of a frequency band is not required when the *reported* 1-g or 10-g SAR for the mid-band or highest output power channel is:
   · ≤ 0.8 W/kg or 2.0 W/kg, for 1-g or 10-g respectively, when the transmission band is ≤ 100 MHz
   · ≤ 0.6 W/kg or 1.5 W/kg, for 1-g or 10-g respectively, when the transmission band is between 100 MHz and 200 MHz
   · ≤ 0.4 W/kg or 1.0 W/kg, for 1-g or 10-g respectively, when the transmission band is ≥ 200 MHz
3. Per KDB 865664 D01v01r04, for each frequency band, repeated SAR measurement is required only when the measured SAR is ≥0.8W/kg.
4. For WWAN UAT antenna, when the audio is actively routed through the earpiece receiver, and the LCD display is off, and the proximity sensor is triggered which indicating the next-to-head condition then power reduction will be implemented immediately at GSM850/GSM1900, WCDMA B2 / B4 / B5, CDMA BC0/BC1/BC10, LTE B2 / B4 / B5 / B7 / B12 / B13 / B17 / B25 / B26 / B30 / B38 / B41 / B48 / B66 / B71 and 5G NR n2/n5/n66/n71/n41.
5. For WWAN UAT antenna, hotspot mode is enabled, power reduction will be activated to limit the maximum power of GSM850/GSM1900, WCDMA B2 / B4 / B5, CDMA BC0/BC1/BC10, LTE B2 / B5 / B7 / B13 / B25 / B26 / B30 / B38 / B41 / B48 and 5G NR n2/n5/n66/n71/n41.
6. For WWAN LAT antenna, hotspot mode is enabled, power reduction will be activated to limit the maximum power of GSM1900, WCDMA B2 / B4, CDMA BC1, LTE B2 / B4 / B7 / B25 / B30 / B38 / B41 / B48 / B66 and 5G NR n2/n5/n66/n71/n41.
7. For WWAN UAT antenna, when the p-sensor is detect handheld state, power reduction will be activated to limit the maximum power of LTE B2 / B7 / B25 / B30 / B48 for front/back/bottom sides.
8. For WWAN LAT antenna, when the p-sensor is detect handheld state, power reduction will be activated to limit the maximum power of UMTS B2/B4, CDMA BC1 and LTE B2 / B4 / B7 / B25 / B66 for front/back/bottom sides.
9. For WLAN when transmit simultaneous with WWAN LAT or UAT, power reduction will be activated to limit the maximum power for head / hotspot / body-worn / extremity.
10. Per KDB 648474 D04v01r03, when the reported SAR for a body-worn accessory measured without a headset connected to the handset is ≤ 1.2 W/kg, SAR testing with a headset connected to the handset is not required.
11. Per KDB648474 D04v01r03, for smart phones with a display diagonal dimension > 15.0 cm or an overall diagonal dimension > 16.0 cm, when hotspot mode applies, 10-g product specific SAR is required only for the surfaces and edges with hotspot mode 1-g reported SAR > 1.2 W/kg, however, when power reduction applies to hotspot mode the measured SAR must be scaled to the maximum output power, including tolerance, allowed for phablet modes to compare with the 1.2 W/kg SAR test reduction threshold, WCDMA B2/B4, CDMA BC1 and LTE B2 / B4 / B5 / B7 / B25 / B26 / B30 / B66 / B48 is required to be tested

GSM Note:

1. Per KDB 941225 D01v03r01, for SAR test reduction for GSM / GPRS / EDGE modes is determined by the source-based time-averaged output power including tune-up tolerance. The mode with highest specified time-averaged output power should be tested for SAR compliance in the applicable exposure conditions. For modes with the same specified maximum output power and tolerance, the higher number time-slot configuration should be tested. Therefore, the GPRS (3Tx slots) for GSM850/GSM1900 is considered as the primary mode.
2. Other configurations of GSM / GPRS / EDGE are considered as secondary modes. The 3G SAR test reduction procedure is applied, when the maximum output power and tune-up tolerance specified for production units in a secondary mode is ≤ ¼ dB higher than the primary mode, SAR measurement is not required for the secondary mode.

UMTS Note:

1. Per KDB 941225 D01v03r01, for SAR testing is measured using a 12.2 kbps RMC with TPC bits configured to all “1’s”.
2. Per KDB 941225 D01v03r01, RMC 12.2kbps setting is used to evaluate SAR. The maximum output power and tune-up tolerance specified for production units in HSDPA / HSUPA / DC-HSDPA / HSPA+ is ≤ ¼ dB higher than RMC 12.2Kbps or when the highest reported SAR of the RMC12.2Kbps is scaled by the ratio of specified maximum output power and tune-up tolerance of HSDPA / HSUPA / DC-HSDPA / HSPA+ to RMC12.2Kbps and the adjusted SAR is ≤ 1.2 W/kg, SAR measurement is not required for HSDPA / HSUPA / DC-HSDPA / HSPA+, and according to the following RF output power, the output power results of the secondary modes (HSUPA, HSDPA, DC-HSDPA / HSPA+) are less than ¼ dB higher than the primary modes; therefore, SAR measurement is not required for HSDPA / HSUPA / DC-HSDPA / HSPA+.

CDMA Note:

1. Per KDB 941225 D01v03r01, SAR for next to the ear head exposure is measured in RC3 with the handset configured to transmit at full rate in SO55.
2. Per KDB 941225 D01v03r01, in Hotspot mode EUT is treated as data device and SAR is tested with Ev-Do Rev 0 (RTAP 153.6kbps) as the primary mode.
3. Per KDB 941225 D01v03r01, for Body-worn accessory SAR is measured in RC3 with the handset configured in TDSO/SO32 to transmit at full rate on FCH only with all other code channels disabled. The body-worn accessory procedures in KDB Publication 447498 are applied. The 3G SAR test reduction procedure is applied to the multiple code channel configuration (FCH+SCH), with FCH only as the primary mode.

LTE Note:

1. Per KDB 941225 D05v02r05, start with the largest channel bandwidth and measure SAR for QPSK with 1 RB allocation, using the RB offset and required test channel combination with the highest maximum output power for RB offsets at the upper edge, middle and lower edge of each required test channel.
2. Per KDB 941225 D05v02r05, 50% RB allocation for QPSK SAR testing follows 1RB QPSK allocation procedure.
3. Per KDB 941225 D05v02r05, For QPSK with 100% RB allocation, SAR is not required when the highest maximum output power for 100 % RB allocation is less than the highest maximum output power in 50% and 1 RB allocations and the highest reported SAR for 1 RB and 50% RB allocation are ≤ 0.8 W/kg. Otherwise, SAR is measured for the highest output power channel; and if the reported SAR is > 1.45 W/kg, the remaining required test channels must also be tested.
4. Per KDB 941225 D05v02r05, 16QAM output power for each RB allocation configuration is > not ½ dB higher than the same configuration in QPSK and the reported SAR for the QPSK configuration is ≤ 1.45 W/kg; Per KDB 941225 D05v02r05, 16QAM SAR testing is not required.
5. Per KDB 941225 D05v02r05, Smaller bandwidth output power for each RB allocation configuration is > not ½ dB higher than the same configuration in the largest supported bandwidth, and the reported SAR for the largest supported bandwidth is ≤ 1.45 W/kg; Per KDB 941225 D05v02r05, smaller bandwidth SAR testing is not required.
6. LTE band 2/4/17/38 SAR test was covered by Band 25/66/12/41; according to TCB workshop, SAR test for overlapping LTE bands can be reduced if
   a. The maximum output power, including tolerance, for the smaller band is ≤ the larger band to qualify for the SAR test exclusion.
   b. The channel bandwidth and other operating parameters for the smaller band are fully supported by the larger band.

5G NR Note:

1. For 5G NR test procedure was following step similar FCC KDB 941225 D05:
2. SAR testing start with the largest channel bandwidth and measure SAR for QPSK with 1 RB allocation, using the RB offset and required test channel combination with the highest maximum output power for RB offsets at the upper edge, middle and lower edge of each required test channel
3. 50% RB allocation for QPSK SAR testing follows 1RB QPSK allocation procedure
4. QPSK with 100% RB allocation, SAR is not required when the highest maximum output power for 100 % RB allocation is less than the highest maximum output power in 50% and 1 RB allocations and the highest reported SAR for 1 RB and 50% RB allocation are ≤ 0.8 W/kg. Otherwise, SAR is measured for the highest output power channel; and if the reported SAR is > 1.45 W/kg, the remaining required test channels must also be tested
5. 16QAM/64QAM/256QAM output powers according to 3GPP MPR will not ½ dB higher than the same configuration in QPSK, also reported SAR for the QPSK configuration is less than 1.45 W/kg, 16QAM/64QAM/256QAM SAR testing are not required.
6. Smaller bandwidth output power for each RB allocation configuration for this device will not ½ dB higher than the same configuration in the largest supported bandwidth, and the reported SAR for the largest supported bandwidth is ≤ 1.45 W/kg, smaller bandwidth SAR testing is not required for this device

WLAN Note:

1. Per KDB 248227 D01v02r02, for 2.4GHz 802.11g/n SAR testing is not required when the highest reported SAR for DSSS is adjusted by the ratio of OFDM to DSSS specified maximum output power and the adjusted SAR is ≤ 1.2 W/kg.
2. Per KDB 248227 D01v02r02, U-NII-1 or U-NII-2A SAR testing is not required when the U-NII-1 or U-NII-2A band highest reported SAR for a test configuration is ≤ 1.2 W/kg, SAR is not required for U-NII-1 band or U-NII-2A.
3. When the reported SAR of the test position is > 0.4 W/kg, SAR is repeated for the 802.11 transmission mode configuration tested in the initial test position to measure the subsequent next closet/smallest test separation distance and maximum coupling test position on the highest maximum output power channel, until the report SAR is ≤ 0.8 W/kg or all required test position are tested.
4. For all positions / configurations, when the reported SAR is > 0.8 W/kg, SAR is measured for these test positions / configurations on the subsequent next highest measured output power channel(s) until the reported SAR is ≤ 1.2 W/kg or all required channels are tested.
5. During SAR testing the WLAN transmission was verified using a spectrum analyzer.
6. When WLAN transmit simultaneous with WWAN will limit different maximum output power level as following, detail description include operational description
   a. Level 1: the WLAN is transmitting standalone
   b. Level 2: the WWAN transmit simultaneous with 2.4GHz WLAN or 5GHz WLAN
   c. Level 3: the WWAN and FR1 or nter-band CA transmit simultaneous with 2.4GHz WLAN or 5GHz WLAN + Bluetooth

<GSM SAR>

Plot No.	Band	Mode	Test Position	Gap (mm)	Power Reduction	Ch.	Freq. (MHz)	Average Power (dBm)	Tune-Up Limit (dBm)	Tune-up Scaling Factor	Power Drift (dB)	Measured 1g SAR (W/kg)	Reported 1g SAR (W/kg)
	GSM850_UAT	GPRS(3 Tx slot)	Right Cheek	0mm	Reduced	128	824.2	24.73	25.80	1.279	0.05	0.190	0.243
	GSM850_UAT	GPRS(3 Tx slot)	Right Tilted	0mm	Reduced	128	824.2	24.73	25.80	1.279	0.02	0.033	0.042
	GSM850_UAT	GPRS(3 Tx slot)	Left Cheek	0mm	Reduced	128	824.2	24.73	25.80	1.279	-0.06	0.264	0.338
	GSM850_UAT	GPRS(3 Tx slot)	Left Tilted	0mm	Reduced	128	824.2	24.73	25.80	1.279	0.03	0.051	0.065
	GSM850_UAT	GPRS(3 Tx slot)	Left Cheek	0mm	Reduced	189	836.4	24.43	25.80	1.371	0.09	0.268	0.367
01	GSM850_UAT	GPRS(3 Tx slot)	Left Cheek	0mm	Reduced	251	848.8	24.40	25.80	1.380	-0.07	0.352	0.486
	GSM850_LAT	GPRS(3 Tx slot)	Right Cheek	0mm	Full	128	824.2	28.68	29.80	1.294	0.02	0.098	0.126
	GSM850_LAT	GPRS(3 Tx slot)	Right Tilted	0mm	Full	128	824.2	28.68	29.80	1.294	0.02	0.061	0.078
	GSM850_LAT	GPRS(3 Tx slot)	Left Cheek	0mm	Full	128	824.2	28.68	29.80	1.294	0.05	0.139	0.180
	GSM850_LAT	GPRS(3 Tx slot)	Left Tilted	0mm	Full	128	824.2	28.68	29.80	1.294	0.01	0.047	0.061
	GSM850_LAT	GPRS(3 Tx slot)	Left Cheek	0mm	Full	189	836.4	28.62	29.80	1.312	0.14	0.158	0.207
	GSM850_LAT	GPRS(3 Tx slot)	Left Cheek	0mm	Full	251	848.8	28.54	29.80	1.337	0.08	0.146	0.195
	GSM1900_UAT	GPRS(3 Tx slot)	Right Cheek	0mm	Reduced	661	1880	16.80	17.20	1.096	0.03	0.350	0.384
	GSM1900_UAT	GPRS(3 Tx slot)	Right Tilted	0mm	Reduced	661	1880	16.80	17.20	1.096	0.07	0.396	0.434
	GSM1900_UAT	GPRS(3 Tx slot)	Left Cheek	0mm	Reduced	661	1880	16.80	17.20	1.096	-0.05	0.241	0.264
	GSM1900_UAT	GPRS(3 Tx slot)	Left Tilted	0mm	Reduced	661	1880	16.80	17.20	1.096	0.12	0.312	0.342
	GSM1900_UAT	GPRS(3 Tx slot)	Right Tilted	0mm	Reduced	512	1850.2	16.48	17.20	1.180	0.06	0.373	0.440
02	GSM1900_UAT	GPRS(3 Tx slot)	Right Tilted	0mm	Reduced	810	1909.8	16.63	17.20	1.140	0.04	0.393	0.448
	GSM1900_LAT	GPRS(3 Tx slot)	Right Cheek	0mm	Full	661	1880	25.72	26.50	1.197	0.08	0.119	0.142
	GSM1900_LAT	GPRS(3 Tx slot)	Right Tilted	0mm	Full	661	1880	25.72	26.50	1.197	0.04	0.102	0.122
	GSM1900_LAT	GPRS(3 Tx slot)	Left Cheek	0mm	Full	661	1880	25.72	26.50	1.197	0.12	0.083	0.099
	GSM1900_LAT	GPRS(3 Tx slot)	Left Tilted	0mm	Full	661	1880	25.72	26.50	1.197	0.06	0.081	0.097
	GSM1900_LAT	GPRS(3 Tx slot)	Right Cheek	0mm	Full	512	1850.2	25.52	26.50	1.253	-0.09	0.107	0.134
	GSM1900_LAT	GPRS(3 Tx slot)	Right Cheek	0mm	Full	810	1909.8	25.67	26.50	1.211	0.05	0.100	0.121

<WCDMA SAR>

Plot No.	Band	Mode	Test Position	Gap (mm)	Power Reduction	Ch.	Freq. (MHz)	Average Power (dBm)	Tune-Up Limit (dBm)	Tune-up Scaling Factor	Power Drift (dB)	Measured 1g SAR (W/kg)	Reported 1g SAR (W/kg)
	WCDMA V_UAT	RMC 12.2Kbps	Right Cheek	0mm	Reduced	4182	836.4	20.89	21.80	1.233	0.03	0.391	0.482
	WCDMA V_UAT	RMC 12.2Kbps	Right Tilted	0mm	Reduced	4182	836.4	20.89	21.80	1.233	0.05	0.072	0.089
	WCDMA V_UAT	RMC 12.2Kbps	Left Cheek	0mm	Reduced	4182	836.4	20.89	21.80	1.233	0.08	0.499	0.615
	WCDMA V_UAT	RMC 12.2Kbps	Left Tilted	0mm	Reduced	4182	836.4	20.89	21.80	1.233	0.02	0.073	0.089
	WCDMA V_UAT	RMC 12.2Kbps	Left Cheek	0mm	Reduced	4132	826.4	20.87	21.80	1.239	-0.04	0.510	0.632
03	WCDMA V_UAT	RMC 12.2Kbps	Left Cheek	0mm	Reduced	4233	846.6	20.80	21.80	1.259	-0.06	0.521	0.656
	WCDMA V_LAT	RMC 12.2Kbps	Right Cheek	0mm	Full	4182	836.4	24.12	24.80	1.169	-0.09	0.123	0.144
	WCDMA V_LAT	RMC 12.2Kbps	Right Tilted	0mm	Full	4182	836.4	24.12	24.80	1.169	-0.07	0.062	0.073
	WCDMA V_LAT	RMC 12.2Kbps	Left Cheek	0mm	Full	4182	836.4	24.12	24.80	1.169	-0.16	0.156	0.182
	WCDMA V_LAT	RMC 12.2Kbps	Left Tilted	0mm	Full	4182	836.4	24.12	24.80	1.169	0.08	0.076	0.089
	WCDMA V_LAT	RMC 12.2Kbps	Left Cheek	0mm	Full	4132	826.4	24.09	24.80	1.178	-0.08	0.163	0.192
	WCDMA V_LAT	RMC 12.2Kbps	Left Cheek	0mm	Full	4233	846.6	24.10	24.80	1.175	-0.06	0.154	0.181
	WCDMA IV_UAT	RMC 12.2Kbps	Right Cheek	0mm	Reduced	1413	1732.6	13.32	14.00	1.169	0.03	0.413	0.483
	WCDMA IV_UAT	RMC 12.2Kbps	Right Tilted	0mm	Reduced	1413	1732.6	13.32	14.00	1.169	0.18	0.549	0.642
	WCDMA IV_UAT	RMC 12.2Kbps	Left Cheek	0mm	Reduced	1413	1732.6	13.32	14.00	1.169	0.07	0.275	0.322
	WCDMA IV_UAT	RMC 12.2Kbps	Left Tilted	0mm	Reduced	1413	1732.6	13.32	14.00	1.169	0.12	0.356	0.416
	WCDMA IV_UAT	RMC 12.2Kbps	Right Tilted	0mm	Reduced	1312	1712.4	13.21	14.00	1.199	0.02	0.521	0.625
04	WCDMA IV_UAT	RMC 12.2Kbps	Right Tilted	0mm	Reduced	1513	1752.6	13.28	14.00	1.180	0.13	0.566	0.668
	WCDMA IV_LAT	RMC 12.2Kbps	Right Cheek	0mm	Full	1413	1732.6	23.99	24.80	1.205	-0.03	0.181	0.218
	WCDMA IV_LAT	RMC 12.2Kbps	Right Tilted	0mm	Full	1413	1732.6	23.99	24.80	1.205	-0.18	0.100	0.120
	WCDMA IV_LAT	RMC 12.2Kbps	Left Cheek	0mm	Full	1413	1732.6	23.99	24.80	1.205	-0.07	0.235	0.283
	WCDMA IV_LAT	RMC 12.2Kbps	Left Tilted	0mm	Full	1413	1732.6	23.99	24.80	1.205	0.02	0.098	0.118
	WCDMA IV_LAT	RMC 12.2Kbps	Left Cheek	0mm	Full	1312	1712.4	23.94	24.80	1.219	0.01	0.224	0.273
	WCDMA IV_LAT	RMC 12.2Kbps	Left Cheek	0mm	Full	1513	1752.6	23.97	24.80	1.211	0.02	0.244	0.295
	WCDMA II_UAT	RMC 12.2Kbps	Right Cheek	0mm	Reduced	9400	1880	13.46	14.00	1.132	0.04	0.541	0.613
05	WCDMA II_UAT	RMC 12.2Kbps	Right Tilted	0mm	Reduced	9400	1880	13.46	14.00	1.132	0.04	0.654	0.741
	WCDMA II_UAT	RMC 12.2Kbps	Left Cheek	0mm	Reduced	9400	1880	13.46	14.00	1.132	0.06	0.405	0.459
	WCDMA II_UAT	RMC 12.2Kbps	Left Tilted	0mm	Reduced	9400	1880	13.46	14.00	1.132	0.02	0.479	0.542
	WCDMA II_UAT	RMC 12.2Kbps	Right Tilted	0mm	Reduced	9262	1852.4	13.38	14.00	1.153	0.01	0.592	0.683
	WCDMA II_UAT	RMC 12.2Kbps	Right Tilted	0mm	Reduced	9538	1907.6	13.41	14.00	1.146	-0.09	0.631	0.723
	WCDMA II_LAT	RMC 12.2Kbps	Right Cheek	0mm	Full	9400	1880	24.30	24.80	1.122	-0.16	0.257	0.288
	WCDMA II_LAT	RMC 12.2Kbps	Right Tilted	0mm	Full	9400	1880	24.30	24.80	1.122	-0.12	0.206	0.231
	WCDMA II_LAT	RMC 12.2Kbps	Left Cheek	0mm	Full	9400	1880	24.30	24.80	1.122	-0.03	0.186	0.209
	WCDMA II_LAT	RMC 12.2Kbps	Left Tilted	0mm	Full	9400	1880	24.30	24.80	1.122	-0.03	0.156	0.175
	WCDMA II_LAT	RMC 12.2Kbps	Right Cheek	0mm	Full	9262	1852.4	24.10	24.80	1.175	-0.12	0.227	0.267
	WCDMA II_LAT	RMC 12.2Kbps	Right Cheek	0mm	Full	9538	1907.6	24.18	24.80	1.153	-0.09	0.248	0.286

<CDMA SAR>

Plot No.	Band	Mode	Test Position	Gap (mm)	Power Reduction	Ch.	Freq. (MHz)	Average Power (dBm)	Tune-Up Limit (dBm)	Tune-up Scaling Factor	Power Drift (dB)	Measured 1g SAR (W/kg)	Reported 1g SAR (W/kg)
	CDMA2000 BC0_UAT	RC3+SO55	Right Cheek	0mm	Reduced	384	836.52	20.36	21.80	1.393	0.02	0.343	0.478
	CDMA2000 BC0_UAT	RC3+SO55	Right Tilted	0mm	Reduced	384	836.52	20.36	21.80	1.393	0.08	0.068	0.094
	CDMA2000 BC0_UAT	RC3+SO55	Left Cheek	0mm	Reduced	384	836.52	20.36	21.80	1.393	0.09	0.476	0.663
	CDMA2000 BC0_UAT	RC3+SO55	Left Tilted	0mm	Reduced	384	836.52	20.36	21.80	1.393	0.03	0.068	0.094
	CDMA2000 BC0_UAT	RC3+SO55	Left Cheek	0mm	Reduced	1013	824.7	20.35	21.80	1.396	0.07	0.471	0.658
06	CDMA2000 BC0_UAT	RC3+SO55	Left Cheek	0mm	Reduced	777	848.31	20.35	21.80	1.396	0.04	0.487	0.680
	CDMA2000 BC0_LAT	RC3+SO55	Right Cheek	0mm	Full	384	836.52	23.89	24.80	1.233	0.18	0.123	0.152
	CDMA2000 BC0_LAT	RC3+SO55	Right Tilted	0mm	Full	384	836.52	23.89	24.80	1.233	0.12	0.077	0.095
	CDMA2000 BC0_LAT	RC3+SO55	Left Cheek	0mm	Full	384	836.52	23.89	24.80	1.233	0.02	0.135	0.166
	CDMA2000 BC0_LAT	RC3+SO55	Left Tilted	0mm	Full	384	836.52	23.89	24.80	1.233	0.01	0.056	0.069
	CDMA2000 BC0_LAT	RC3+SO55	Left Cheek	0mm	Full	1013	824.7	23.85	24.80	1.245	0.03	0.142	0.177
	CDMA2000 BC0_LAT	RC3+SO55	Left Cheek	0mm	Full	777	848.31	23.84	24.80	1.247	0.04	0.133	0.166
	CDMA2000 BC10_UAT	RC3+SO55	Right Cheek	0mm	Reduced	580	820.5	20.39	21.80	1.384	-0.04	0.350	0.484
	CDMA2000 BC10_UAT	RC3+SO55	Right Tilted	0mm	Reduced	580	820.5	20.39	21.80	1.384	0.15	0.067	0.093
07	CDMA2000 BC10_UAT	RC3+SO55	Left Cheek	0mm	Reduced	580	820.5	20.39	21.80	1.384	0.02	0.515	0.713
	CDMA2000 BC10_UAT	RC3+SO55	Left Tilted	0mm	Reduced	580	820.5	20.39	21.80	1.384	0.03	0.076	0.105
	CDMA2000 BC10_UAT	RC3+SO55	Left Cheek	0mm	Reduced	476	817.9	20.35	21.80	1.396	0.02	0.473	0.660
	CDMA2000 BC10_UAT	RC3+SO55	Left Cheek	0mm	Reduced	684	823.1	20.33	21.80	1.403	0.06	0.475	0.666
	CDMA2000 BC10_LAT	RC3+SO55	Right Cheek	0mm	Full	580	820.5	24.00	24.80	1.202	0.18	0.124	0.149
	CDMA2000 BC10_LAT	RC3+SO55	Right Tilted	0mm	Full	580	820.5	24.00	24.80	1.202	0.02	0.077	0.093
	CDMA2000 BC10_LAT	RC3+SO55	Left Cheek	0mm	Full	580	820.5	24.00	24.80	1.202	-0.04	0.127	0.153
	CDMA2000 BC10_LAT	RC3+SO55	Left Tilted	0mm	Full	580	820.5	24.00	24.80	1.202	0.04	0.060	0.072
	CDMA2000 BC10_LAT	RC3+SO55	Left Cheek	0mm	Full	476	817.9	23.91	24.80	1.227	0.01	0.124	0.152
	CDMA2000 BC10_LAT	RC3+SO55	Left Cheek	0mm	Full	684	823.1	23.97	24.80	1.211	0.03	0.138	0.167
08	CDMA2000 BC1_UAT	RC3+SO55	Right Cheek	0mm	Reduced	600	1880	12.72	14.00	1.343	-0.14	0.592	0.795
	CDMA2000 BC1_UAT	RC3+SO55	Right Tilted	0mm	Reduced	25	1851.25	12.48	14.00	1.419	-0.02	0.491	0.697
	CDMA2000 BC1_UAT	RC3+SO55	Left Cheek	0mm	Reduced	1175	1908.75	12.58	14.00	1.387	-0.02	0.518	0.718
	CDMA2000 BC1_UAT	RC3+SO55	Left Tilted	0mm	Reduced	600	1880	12.72	14.00	1.343	-0.14	0.511	0.686
	CDMA2000 BC1_UAT	RC3+SO55	Right Tilted	0mm	Reduced	600	1880	12.72	14.00	1.343	-0.01	0.399	0.536
	CDMA2000 BC1_UAT	RC3+SO55	Right Tilted	0mm	Reduced	600	1880	12.72	14.00	1.343	-0.13	0.438	0.588
	CDMA2000 BC1_LAT	RC3+SO55	Right Cheek	0mm	Full	600	1880	23.80	24.80	1.259	-0.08	0.244	0.307
	CDMA2000 BC1_LAT	RC3+SO55	Right Tilted	0mm	Full	600	1880	23.80	24.80	1.259	0.05	0.170	0.214
	CDMA2000 BC1_LAT	RC3+SO55	Left Cheek	0mm	Full	600	1880	23.80	24.80	1.259	0.03	0.152	0.191
	CDMA2000 BC1_LAT	RC3+SO55	Left Tilted	0mm	Full	600	1880	23.80	24.80	1.259	0.05	0.137	0.172
	CDMA2000 BC1_LAT	RC3+SO55	Right Cheek	0mm	Full	25	1851.25	23.51	24.80	1.346	0.05	0.245	0.330
	CDMA2000 BC1_LAT	RC3+SO55	Right Cheek	0mm	Full	1175	1908.75	23.67	24.80	1.297	0.11	0.212	0.275

<FDD LTE SAR>

Plot No.	Band	BW (MHz)	Modulation	RB Size	RB offset	Test Position	Gap (mm)	Power Reduction	Ch.	Freq. (MHz)	Average Power (dBm)	Tune-Up Limit (dBm)	Tune-up Scaling Factor	Power Drift (dB)	Measured 1g SAR (W/kg)	Reported 1g SAR (W/kg)
	LTE Band 71_UAT	20M	QPSK	1	0	Right Cheek	0mm	Reduced	133322	673	20.58	21.80	1.324	0.03	0.357	0.473
	LTE Band 71_UAT	20M	QPSK	1	0	Right Tilted	0mm	Reduced	133322	673	20.58	21.80	1.324	0.15	0.081	0.107
	LTE Band 71_UAT	20M	QPSK	1	0	Left Cheek	0mm	Reduced	133322	673	20.58	21.80	1.324	0.09	0.487	0.645
	LTE Band 71_UAT	20M	QPSK	1	0	Left Tilted	0mm	Reduced	133322	673	20.58	21.80	1.324	-0.03	0.068	0.090
	LTE Band 71_UAT	20M	QPSK	50	24	Right Cheek	0mm	Reduced	133322	673	20.34	21.80	1.400	0.02	0.429	0.600
	LTE Band 71_UAT	20M	QPSK	50	24	Right Tilted	0mm	Reduced	133322	673	20.34	21.80	1.400	0.07	0.097	0.136
09	LTE Band 71_UAT	20M	QPSK	50	24	Left Cheek	0mm	Reduced	133322	673	20.34	21.80	1.400	0.16	0.505	0.707
	LTE Band 71_UAT	20M	QPSK	50	24	Left Tilted	0mm	Reduced	133322	673	20.34	21.80	1.400	0.09	0.083	0.115
	LTE Band 71_LAT	20M	QPSK	1	0	Right Cheek	0mm	Full	133322	673	23.65	23.80	1.035	-0.07	0.105	0.109
	LTE Band 71_LAT	20M	QPSK	1	0	Right Tilted	0mm	Full	133322	673	23.65	23.80	1.035	0.01	0.050	0.051
	LTE Band 71_LAT	20M	QPSK	1	0	Left Cheek	0mm	Full	133322	673	23.65	23.80	1.035	0.04	0.111	0.115
	LTE Band 71_LAT	20M	QPSK	1	0	Left Tilted	0mm	Full	133322	673	23.65	23.80	1.035	0.01	0.050	0.051
	LTE Band 71_LAT	20M	QPSK	50	24	Right Cheek	0mm	Full	133322	673	22.69	22.80	1.026	0.02	0.082	0.084
	LTE Band 71_LAT	20M	QPSK	50	24	Right Tilted	0mm	Full	133322	673	22.69	22.80	1.026	0.08	0.053	0.054
	LTE Band 71_LAT	20M	QPSK	50	24	Left Cheek	0mm	Full	133322	673	22.69	22.80	1.026	0.02	0.088	0.090
	LTE Band 71_LAT	20M	QPSK	50	24	Left Tilted	0mm	Full	133322	673	22.69	22.80	1.026	0.05	0.041	0.042
	LTE Band 12_UAT	10M	QPSK	1	25	Right Cheek	0mm	Reduced	23095	707.5	19.23	20.30	1.279	0.05	0.389	0.498
	LTE Band 12_UAT	10M	QPSK	1	25	Right Tilted	0mm	Reduced	23095	707.5	19.23	20.30	1.279	0.07	0.081	0.103
	LTE Band 12_UAT	10M	QPSK	1	25	Left Cheek	0mm	Reduced	23095	707.5	19.23	20.30	1.279	0.02	0.458	0.586
	LTE Band 12_UAT	10M	QPSK	1	25	Left Tilted	0mm	Reduced	23095	707.5	19.23	20.30	1.279	-0.06	0.083	0.107
	LTE Band 12_UAT	10M	QPSK	25	12	Right Cheek	0mm	Reduced	23095	707.5	19.20	20.30	1.288	0.1	0.403	0.519
	LTE Band 12_UAT	10M	QPSK	25	12	Right Tilted	0mm	Reduced	23095	707.5	19.20	20.30	1.288	-0.06	0.083	0.106
10	LTE Band 12_UAT	10M	QPSK	25	12	Left Cheek	0mm	Reduced	23095	707.5	19.20	20.30	1.288	0.13	0.470	0.605
	LTE Band 12_UAT	10M	QPSK	25	12	Left Tilted	0mm	Reduced	23095	707.5	19.20	20.30	1.288	0.05	0.085	0.110
	LTE Band 12_LAT	10M	QPSK	1	25	Right Cheek	0mm	Full	23095	707.5	22.94	23.80	1.219	-0.03	0.138	0.168
	LTE Band 12_LAT	10M	QPSK	1	25	Right Tilted	0mm	Full	23095	707.5	22.94	23.80	1.219	0.05	0.078	0.095
	LTE Band 12_LAT	10M	QPSK	1	25	Left Cheek	0mm	Full	23095	707.5	22.94	23.80	1.219	-0.11	0.169	0.206
	LTE Band 12_LAT	10M	QPSK	1	25	Left Tilted	0mm	Full	23095	707.5	22.94	23.80	1.219	0.02	0.069	0.084
	LTE Band 12_LAT	10M	QPSK	25	12	Right Cheek	0mm	Full	23095	707.5	22.10	22.80	1.175	-0.06	0.120	0.141
	LTE Band 12_LAT	10M	QPSK	25	12	Right Tilted	0mm	Full	23095	707.5	22.10	22.80	1.175	0.08	0.063	0.074
	LTE Band 12_LAT	10M	QPSK	25	12	Left Cheek	0mm	Full	23095	707.5	22.10	22.80	1.175	0.01	0.147	0.173
	LTE Band 12_LAT	10M	QPSK	25	12	Left Tilted	0mm	Full	23095	707.5	22.10	22.80	1.175	0.01	0.054	0.063
	LTE Band 13_UAT	10M	QPSK	1	0	Right Cheek	0mm	Reduced	23230	782	20.20	21.30	1.288	0.03	0.427	0.550
	LTE Band 13_UAT	10M	QPSK	1	0	Right Tilted	0mm	Reduced	23230	782	20.20	21.30	1.288	0.07	0.088	0.113
11	LTE Band 13_UAT	10M	QPSK	1	0	Left Cheek	0mm	Reduced	23230	782	20.20	21.30	1.288	0.09	0.554	0.714
	LTE Band 13_UAT	10M	QPSK	1	0	Left Tilted	0mm	Reduced	23230	782	20.20	21.30	1.288	-0.06	0.086	0.111
	LTE Band 13_UAT	10M	QPSK	25	12	Right Cheek	0mm	Reduced	23230	782	20.18	21.30	1.294	0.02	0.419	0.542
	LTE Band 13_UAT	10M	QPSK	25	12	Right Tilted	0mm	Reduced	23230	782	20.18	21.30	1.294	0.09	0.085	0.110
	LTE Band 13_UAT	10M	QPSK	25	12	Left Cheek	0mm	Reduced	23230	782	20.18	21.30	1.294	0.04	0.522	0.676
	LTE Band 13_UAT	10M	QPSK	25	12	Left Tilted	0mm	Reduced	23230	782	20.18	21.30	1.294	0.12	0.079	0.102
	LTE Band 13_LAT	10M	QPSK	1	0	Right Cheek	0mm	Full	23230	782	22.92	23.80	1.225	-0.04	0.094	0.116
	LTE Band 13_LAT	10M	QPSK	1	0	Right Tilted	0mm	Full	23230	782	22.92	23.80	1.225	0.02	0.045	0.056
	LTE Band 13_LAT	10M	QPSK	1	0	Left Cheek	0mm	Full	23230	782	22.92	23.80	1.225	0.13	0.121	0.148
	LTE Band 13_LAT	10M	QPSK	1	0	Left Tilted	0mm	Full	23230	782	22.92	23.80	1.225	0.07	0.041	0.050
	LTE Band 13_LAT	10M	QPSK	25	12	Right Cheek	0mm	Full	23230	782	22.03	22.80	1.194	-0.04	0.076	0.091
	LTE Band 13_LAT	10M	QPSK	25	12	Right Tilted	0mm	Full	23230	782	22.03	22.80	1.194	0.02	0.043	0.051
	LTE Band 13_LAT	10M	QPSK	25	12	Left Cheek	0mm	Full	23230	782	22.03	22.80	1.194	0.01	0.092	0.110
	LTE Band 13_LAT	10M	QPSK	25	12	Left Tilted	0mm	Full	23230	782	22.03	22.80	1.194	0.05	0.037	0.045

Plot No.	Band	BW (MHz)	Modulation	RB Size	RB offset	Test Position	Gap (mm)	Power Reduction	Ch.	Freq. (MHz)	Average Power (dBm)	Tune-Up Limit (dBm)	Tune-up Scaling Factor	Power Drift (dB)	Measured 1g SAR (W/kg)	Reported 1g SAR (W/kg)
	LTE Band 5_UAT	10M	QPSK	1	49	Right Cheek	0mm	Reduced	20525	836.5	19.52	20.80	1.343	0.05	0.302	0.406
	LTE Band 5_UAT	10M	QPSK	1	49	Right Tilted	0mm	Reduced	20525	836.5	19.52	20.80	1.343	0.07	0.065	0.087
12	LTE Band 5_UAT	10M	QPSK	1	49	Left Cheek	0mm	Reduced	20525	836.5	19.52	20.80	1.343	-0.13	0.450	0.604
	LTE Band 5_UAT	10M	QPSK	1	49	Left Tilted	0mm	Reduced	20525	836.5	19.52	20.80	1.343	0.13	0.067	0.090
	LTE Band 5_UAT	10M	QPSK	25	12	Right Cheek	0mm	Reduced	20525	836.5	19.50	20.80	1.349	0.02	0.306	0.413
	LTE Band 5_UAT	10M	QPSK	25	12	Right Tilted	0mm	Reduced	20525	836.5	19.50	20.80	1.349	0.15	0.067	0.090
	LTE Band 5_UAT	10M	QPSK	25	12	Left Cheek	0mm	Reduced	20525	836.5	19.50	20.80	1.349	0.01	0.448	0.604
	LTE Band 5_UAT	10M	QPSK	25	12	Left Tilted	0mm	Reduced	20525	836.5	19.50	20.80	1.349	-0.09	0.068	0.092
	LTE Band 5_LAT	10M	QPSK	1	49	Right Cheek	0mm	Full	20525	836.5	22.84	23.80	1.247	0.08	0.116	0.145
	LTE Band 5_LAT	10M	QPSK	1	49	Right Tilted	0mm	Full	20525	836.5	22.84	23.80	1.247	0.03	0.071	0.089
	LTE Band 5_LAT	10M	QPSK	1	49	Left Cheek	0mm	Full	20525	836.5	22.84	23.80	1.247	0.04	0.164	0.205
	LTE Band 5_LAT	10M	QPSK	1	49	Left Tilted	0mm	Full	20525	836.5	22.84	23.80	1.247	-0.05	0.070	0.088
	LTE Band 5_LAT	10M	QPSK	25	12	Right Cheek	0mm	Full	20525	836.5	21.91	22.80	1.227	0.07	0.098	0.120
	LTE Band 5_LAT	10M	QPSK	25	12	Right Tilted	0mm	Full	20525	836.5	21.91	22.80	1.227	0.1	0.061	0.075
	LTE Band 5_LAT	10M	QPSK	25	12	Left Cheek	0mm	Full	20525	836.5	21.91	22.80	1.227	0.09	0.147	0.180
	LTE Band 5_LAT	10M	QPSK	25	12	Left Tilted	0mm	Full	20525	836.5	21.91	22.80	1.227	-0.16	0.058	0.071
	LTE Band 26_UAT	15M	QPSK	1	0	Right Cheek	0mm	Reduced	26865	831.5	19.76	20.80	1.271	0.06	0.193	0.245
	LTE Band 26_UAT	15M	QPSK	1	0	Right Tilted	0mm	Reduced	26865	831.5	19.76	20.80	1.271	0.04	0.045	0.057
	LTE Band 26_UAT	15M	QPSK	1	0	Left Cheek	0mm	Reduced	26865	831.5	19.76	20.80	1.271	-0.08	0.288	0.366
	LTE Band 26_UAT	15M	QPSK	1	0	Left Tilted	0mm	Reduced	26865	831.5	19.76	20.80	1.271	0.03	0.080	0.102
	LTE Band 26_UAT	15M	QPSK	36	20	Right Cheek	0mm	Reduced	26865	831.5	19.68	20.80	1.294	0.06	0.225	0.291
	LTE Band 26_UAT	15M	QPSK	36	20	Right Tilted	0mm	Reduced	26865	831.5	19.68	20.80	1.294	0.12	0.066	0.085
	LTE Band 26_UAT	15M	QPSK	36	20	Left Cheek	0mm	Reduced	26865	831.5	19.68	20.80	1.294	0.08	0.437	0.566
	LTE Band 26_UAT	15M	QPSK	36	20	Left Tilted	0mm	Reduced	26865	831.5	19.68	20.80	1.294	-0.03	0.080	0.104
	LTE Band 26_UAT	15M	QPSK	36	20	Left Cheek	0mm	Reduced	26765	821.5	19.59	20.80	1.321	0.04	0.535	0.707
	LTE Band 26_UAT	15M	QPSK	36	20	Left Cheek	0mm	Reduced	26915	836.5	19.56	20.80	1.330	0.07	0.519	0.691
13	LTE Band 26_UAT	15M	QPSK	36	20	Left Cheek	0mm	Reduced	26965	841.5	19.55	20.80	1.334	0.09	0.534	0.712
	LTE Band 26_LAT	15M	QPSK	1	0	Right Cheek	0mm	Full	26865	831.5	22.99	23.80	1.205	-0.09	0.068	0.082
	LTE Band 26_LAT	15M	QPSK	1	0	Right Tilted	0mm	Full	26865	831.5	22.99	23.80	1.205	0.05	0.076	0.091
	LTE Band 26_LAT	15M	QPSK	1	0	Left Cheek	0mm	Full	26865	831.5	22.99	23.80	1.205	-0.03	0.136	0.164
	LTE Band 26_LAT	15M	QPSK	1	0	Left Tilted	0mm	Full	26865	831.5	22.99	23.80	1.205	0.07	0.060	0.073
	LTE Band 26_LAT	15M	QPSK	1	0	Left Cheek	0mm	Full	26765	821.5	22.81	23.80	1.256	0.04	0.145	0.182
	LTE Band 26_LAT	15M	QPSK	1	0	Left Cheek	0mm	Full	26915	836.5	22.93	23.80	1.222	0	0.163	0.199
	LTE Band 26_LAT	15M	QPSK	1	0	Left Cheek	0mm	Full	26965	841.5	22.95	23.80	1.216	0.09	0.162	0.197
	LTE Band 26_LAT	15M	QPSK	36	20	Right Cheek	0mm	Full	26865	831.5	22.07	22.80	1.183	-0.07	0.061	0.072
	LTE Band 26_LAT	15M	QPSK	36	20	Right Tilted	0mm	Full	26865	831.5	22.07	22.80	1.183	0.05	0.061	0.072
	LTE Band 26_LAT	15M	QPSK	36	20	Left Cheek	0mm	Full	26865	831.5	22.07	22.80	1.183	0.06	0.119	0.141
	LTE Band 26_LAT	15M	QPSK	36	20	Left Tilted	0mm	Full	26865	831.5	22.07	22.80	1.183	-0.06	0.047	0.056

Plot No.	Band	BW (MHz)	Modulation	RB Size	RB offset	Test Position	Gap (mm)	Power Reduction	Ch.	Freq. (MHz)	Average Power (dBm)	Tune-Up Limit (dBm)	Tune-up Scaling Factor	Power Drift (dB)	Measured 1g SAR (W/kg)	Reported 1g SAR (W/kg)
	LTE Band 66_UAT	20M	QPSK	1	0	Right Cheek	0mm	Reduced	132322	1745	12.04	13.00	1.247	0.02	0.286	0.357
	LTE Band 66_UAT	20M	QPSK	1	0	Right Tilted	0mm	Reduced	132322	1745	12.04	13.00	1.247	0.07	0.373	0.465
	LTE Band 66_UAT	20M	QPSK	1	0	Left Cheek	0mm	Reduced	132322	1745	12.04	13.00	1.247	0.09	0.246	0.307
	LTE Band 66_UAT	20M	QPSK	1	0	Left Tilted	0mm	Reduced	132322	1745	12.04	13.00	1.247	0.13	0.337	0.420
	LTE Band 66_UAT	20M	QPSK	50	24	Right Cheek	0mm	Reduced	132322	1745	12.02	13.00	1.253	-0.06	0.406	0.509
	LTE Band 66_UAT	20M	QPSK	50	24	Right Tilted	0mm	Reduced	132322	1745	12.02	13.00	1.253	0.02	0.456	0.571
	LTE Band 66_UAT	20M	QPSK	50	24	Left Cheek	0mm	Reduced	132322	1745	12.02	13.00	1.253	-0.08	0.275	0.345
	LTE Band 66_UAT	20M	QPSK	50	24	Left Tilted	0mm	Reduced	132322	1745	12.02	13.00	1.253	0.04	0.371	0.465
	LTE Band 66_UAT	20M	QPSK	50	24	Right Tilted	0mm	Reduced	132072	1720	11.97	13.00	1.268	0.09	0.440	0.558
14	LTE Band 66_UAT	20M	QPSK	50	24	Right Tilted	0mm	Reduced	132572	1770	11.99	13.00	1.262	0.12	0.583	0.736
	LTE Band 66C_UAT	20M	QPSK	1	0	Right Tilted	0mm	Reduced	132322	1745	12.69	13.00	1.074	0.1	0.612	0.657
	LTE Band 66_LAT	20M	QPSK	1	0	Right Cheek	0mm	Full	132572	1770	23.03	23.80	1.194	-0.01	0.228	0.272
	LTE Band 66_LAT	20M	QPSK	1	0	Right Tilted	0mm	Full	132572	1770	23.03	23.80	1.194	0.03	0.118	0.141
	LTE Band 66_LAT	20M	QPSK	1	0	Left Cheek	0mm	Full	132572	1770	23.03	23.80	1.194	0.04	0.191	0.228
	LTE Band 66_LAT	20M	QPSK	1	0	Left Tilted	0mm	Full	132572	1770	23.03	23.80	1.194	-0.02	0.083	0.099
	LTE Band 66_LAT	20M	QPSK	1	0	Right Cheek	0mm	Full	132072	1720	22.67	23.80	1.297	0.05	0.148	0.192
	LTE Band 66_LAT	20M	QPSK	1	0	Right Cheek	0mm	Full	132322	1745	22.90	23.80	1.230	0.03	0.116	0.143
	LTE Band 66_LAT	20M	QPSK	50	24	Right Cheek	0mm	Full	132572	1770	22.18	22.80	1.153	-0.06	0.198	0.228
	LTE Band 66_LAT	20M	QPSK	50	24	Right Tilted	0mm	Full	132572	1770	22.18	22.80	1.153	0.04	0.095	0.109
	LTE Band 66_LAT	20M	QPSK	50	24	Left Cheek	0mm	Full	132572	1770	22.18	22.80	1.153	0.01	0.165	0.190
	LTE Band 66_LAT	20M	QPSK	50	24	Left Tilted	0mm	Full	132572	1770	22.18	22.80	1.153	0.02	0.077	0.088
	LTE Band 66C_LAT	20M	QPSK	1	0	Right Cheek	0mm	Full	132572	1770	22.75	23.80	1.274	-0.06	0.205	0.261
	LTE Band 25_UAT	20M	QPSK	1	0	Right Cheek	0mm	Reduced	26340	1880	13.03	13.50	1.114	0.05	0.584	0.651
	LTE Band 25_UAT	20M	QPSK	1	0	Right Tilted	0mm	Reduced	26340	1880	13.03	13.50	1.114	0.07	0.699	0.779
	LTE Band 25_UAT	20M	QPSK	1	0	Left Cheek	0mm	Reduced	26340	1880	13.03	13.50	1.114	0.03	0.417	0.465
	LTE Band 25_UAT	20M	QPSK	1	0	Left Tilted	0mm	Reduced	26340	1880	13.03	13.50	1.114	0.15	0.519	0.578
	LTE Band 25_UAT	20M	QPSK	50	24	Right Cheek	0mm	Reduced	26340	1880	12.97	13.50	1.130	-0.05	0.608	0.687
	LTE Band 25_UAT	20M	QPSK	50	24	Right Tilted	0mm	Reduced	26340	1880	12.97	13.50	1.130	0.09	0.720	0.813
	LTE Band 25_UAT	20M	QPSK	50	24	Left Cheek	0mm	Reduced	26340	1880	12.97	13.50	1.130	0.11	0.472	0.533
	LTE Band 25_UAT	20M	QPSK	50	24	Left Tilted	0mm	Reduced	26340	1880	12.97	13.50	1.130	-0.03	0.566	0.639
	LTE Band 25_UAT	20M	QPSK	50	24	Right Tilted	0mm	Reduced	26140	1860	12.96	13.50	1.132	0.09	0.698	0.790
	LTE Band 25_UAT	20M	QPSK	50	24	Right Tilted	0mm	Reduced	26590	1905	12.95	13.50	1.135	0.04	0.788	0.894
	LTE Band 25_UAT	20M	QPSK	100	0	Right Tilted	0mm	Reduced	26340	1880	13.01	13.50	1.119	0.02	0.716	0.802
	LTE Band 25_UAT	20M	QPSK	100	0	Right Tilted	0mm	Reduced	26140	1860	13.00	13.50	1.122	0.08	0.712	0.799
15	LTE Band 25_UAT	20M	QPSK	100	0	Right Tilted	0mm	Reduced	26590	1905	12.86	13.50	1.159	0.04	0.773	0.896
	LTE Band 25_LAT	20M	QPSK	1	0	Right Cheek	0mm	Full	26340	1880	23.23	23.80	1.140	0.05	0.311	0.355
	LTE Band 25_LAT	20M	QPSK	1	0	Right Tilted	0mm	Full	26340	1880	23.23	23.80	1.140	0.03	0.161	0.184
	LTE Band 25_LAT	20M	QPSK	1	0	Left Cheek	0mm	Full	26340	1880	23.23	23.80	1.140	0.01	0.156	0.178
	LTE Band 25_LAT	20M	QPSK	1	0	Left Tilted	0mm	Full	26340	1880	23.23	23.80	1.140	0.01	0.120	0.137
	LTE Band 25_LAT	20M	QPSK	1	0	Right Cheek	0mm	Full	26140	1860	23.13	23.80	1.167	-0.02	0.277	0.323
	LTE Band 25_LAT	20M	QPSK	1	0	Right Cheek	0mm	Full	26590	1905	23.21	23.80	1.146	0.04	0.232	0.266
	LTE Band 25_LAT	20M	QPSK	50	24	Right Cheek	0mm	Full	26340	1880	22.34	22.80	1.112	-0.06	0.242	0.269
	LTE Band 25_LAT	20M	QPSK	50	24	Right Tilted	0mm	Full	26340	1880	22.34	22.80	1.112	0.01	0.114	0.127
	LTE Band 25_LAT	20M	QPSK	50	24	Left Cheek	0mm	Full	26340	1880	22.34	22.80	1.112	0.03	0.105	0.117
	LTE Band 25_LAT	20M	QPSK	50	24	Left Tilted	0mm	Full	26340	1880	22.34	22.80	1.112	0.06	0.041	0.046

Plot No.	Band	BW (MHz)	Modulation	RB Size	RB offset	Test Position	Gap (mm)	Power Reduction	Ch.	Freq. (MHz)	Average Power (dBm)	Tune-Up Limit (dBm)	Tune-up Scaling Factor	Power Drift (dB)	Measured 1g SAR (W/kg)	Reported 1g SAR (W/kg)
	LTE Band 30_UAT	10M	QPSK	1	0	Right Cheek	0mm	Reduced	27710	2310	13.22	13.80	1.143	0.03	0.665	0.760
	LTE Band 30_UAT	10M	QPSK	1	0	Right Tilted	0mm	Reduced	27710	2310	13.22	13.80	1.143	-0.05	0.757	0.865
	LTE Band 30_UAT	10M	QPSK	1	0	Left Cheek	0mm	Reduced	27710	2310	13.22	13.80	1.143	0.07	0.548	0.626
	LTE Band 30_UAT	10M	QPSK	1	0	Left Tilted	0mm	Reduced	27710	2310	13.22	13.80	1.143	0.12	0.580	0.663
	LTE Band 30_UAT	10M	QPSK	25	12	Right Cheek	0mm	Reduced	27710	2310	13.17	13.80	1.156	0.06	0.670	0.775
16	LTE Band 30_UAT	10M	QPSK	25	12	Right Tilted	0mm	Reduced	27710	2310	13.17	13.80	1.156	-0.02	0.777	0.898
	LTE Band 30_UAT	10M	QPSK	25	12	Left Cheek	0mm	Reduced	27710	2310	13.17	13.80	1.156	0.08	0.554	0.640
	LTE Band 30_UAT	10M	QPSK	25	12	Left Tilted	0mm	Reduced	27710	2310	13.17	13.80	1.156	0.04	0.586	0.677
	LTE Band 30_LAT	10M	QPSK	1	0	Right Cheek	0mm	Full	27710	2310	23.15	23.80	1.161	-0.03	0.202	0.235
	LTE Band 30_LAT	10M	QPSK	1	0	Right Tilted	0mm	Full	27710	2310	23.15	23.80	1.161	0.01	0.090	0.104
	LTE Band 30_LAT	10M	QPSK	1	0	Left Cheek	0mm	Full	27710	2310	23.15	23.80	1.161	0.02	0.329	0.382
	LTE Band 30_LAT	10M	QPSK	1	0	Left Tilted	0mm	Full	27710	2310	23.15	23.80	1.161	0.05	0.120	0.139
	LTE Band 30_LAT	10M	QPSK	25	12	Right Cheek	0mm	Full	27710	2310	22.15	22.80	1.161	-0.07	0.161	0.187
	LTE Band 30_LAT	10M	QPSK	25	12	Right Tilted	0mm	Full	27710	2310	22.15	22.80	1.161	0.01	0.079	0.091
	LTE Band 30_LAT	10M	QPSK	25	12	Left Cheek	0mm	Full	27710	2310	22.15	22.80	1.161	0.02	0.277	0.322
	LTE Band 30_LAT	10M	QPSK	25	12	Left Tilted	0mm	Full	27710	2310	22.15	22.80	1.161	0.05	0.100	0.116
17	LTE Band 7_UAT	20M	QPSK	1	0	Right Cheek	0mm	Reduced	20850	2510	13.31	13.80	1.119	0.07	0.688	0.770
	LTE Band 7_UAT	20M	QPSK	1	0	Right Tilted	0mm	Reduced	20850	2510	13.31	13.80	1.119	0.05	0.614	0.687
	LTE Band 7_UAT	20M	QPSK	1	0	Left Cheek	0mm	Reduced	20850	2510	13.31	13.80	1.119	0.12	0.418	0.468
	LTE Band 7_UAT	20M	QPSK	1	0	Left Tilted	0mm	Reduced	20850	2510	13.31	13.80	1.119	-0.03	0.496	0.555
	LTE Band 7_UAT	20M	QPSK	1	0	Right Cheek	0mm	Reduced	21100	2535	13.19	13.80	1.151	0.09	0.634	0.730
	LTE Band 7_UAT	20M	QPSK	1	0	Right Cheek	0mm	Reduced	21350	2560	13.10	13.80	1.175	0.11	0.591	0.694
	LTE Band 7_UAT	20M	QPSK	50	24	Right Cheek	0mm	Reduced	20850	2510	13.29	13.80	1.125	0.06	0.681	0.766
	LTE Band 7_UAT	20M	QPSK	50	24	Right Tilted	0mm	Reduced	20850	2510	13.29	13.80	1.125	0.1	0.605	0.680
	LTE Band 7_UAT	20M	QPSK	50	24	Left Cheek	0mm	Reduced	20850	2510	13.29	13.80	1.125	0.07	0.397	0.446
	LTE Band 7_UAT	20M	QPSK	50	24	Left Tilted	0mm	Reduced	20850	2510	13.29	13.80	1.125	0.02	0.480	0.540
	LTE Band 7_LAT	20M	QPSK	1	0	Right Cheek	0mm	Full	20850	2510	23.56	23.80	1.057	-0.06	0.189	0.200
	LTE Band 7_LAT	20M	QPSK	1	0	Right Tilted	0mm	Full	20850	2510	23.56	23.80	1.057	0.01	0.184	0.194
	LTE Band 7_LAT	20M	QPSK	1	0	Left Cheek	0mm	Full	20850	2510	23.56	23.80	1.057	0.02	0.291	0.308
	LTE Band 7_LAT	20M	QPSK	1	0	Left Tilted	0mm	Full	20850	2510	23.56	23.80	1.057	0.02	0.109	0.115
	LTE Band 7_LAT	20M	QPSK	1	0	Left Cheek	0mm	Full	21100	2535	23.46	23.80	1.081	-0.01	0.311	0.336
	LTE Band 7_LAT	20M	QPSK	1	0	Left Cheek	0mm	Full	21350	2560	23.37	23.80	1.104	0.01	0.323	0.357
	LTE Band 7_LAT	20M	QPSK	50	24	Right Cheek	0mm	Full	20850	2510	22.67	22.80	1.030	0.05	0.177	0.182
	LTE Band 7_LAT	20M	QPSK	50	24	Right Tilted	0mm	Full	20850	2510	22.67	22.80	1.030	0.01	0.154	0.159
	LTE Band 7_LAT	20M	QPSK	50	24	Left Cheek	0mm	Full	20850	2510	22.67	22.80	1.030	0.02	0.232	0.239
	LTE Band 7_LAT	20M	QPSK	50	24	Left Tilted	0mm	Full	20850	2510	22.67	22.80	1.030	0.03	0.102	0.105

<TDD LTE SAR>

Plot No.	Band	BW (MHz)	Modulation	RB Size	RB offset	Test Position	Gap (mm)	Power Reduction	Ch.	Freq. (MHz)	Average Power (dBm)	Tune-Up Limit (dBm)	Tune-up Scaling Factor	Duty Cycle %	Duty Cycle Scaling Factor	Power Drift (dB)	Measured 1g SAR (W/kg)	Reported 1g SAR (W/kg)
	LTE Band 41_UAT	20M	QPSK	1	49	Right Cheek	0mm	Reduced	40620	2593	17.15	17.30	1.035	62.9	1.006	0.02	0.453	0.472
	LTE Band 41_UAT	20M	QPSK	1	49	Right Tilted	0mm	Reduced	40620	2593	17.15	17.30	1.035	62.9	1.006	-0.07	0.430	0.448
	LTE Band 41_UAT	20M	QPSK	1	49	Left Cheek	0mm	Reduced	40620	2593	17.15	17.30	1.035	62.9	1.006	0.14	0.377	0.393
	LTE Band 41_UAT	20M	QPSK	1	49	Left Tilted	0mm	Reduced	40620	2593	17.15	17.30	1.035	62.9	1.006	0.09	0.386	0.402
	LTE Band 41_UAT	20M	QPSK	1	49	Right Cheek	0mm	Reduced	39790	2510	16.69	17.30	1.151	62.9	1.006	0.06	0.606	0.702
	LTE Band 41_UAT	20M	QPSK	1	49	Right Cheek	0mm	Reduced	39750	2506	16.61	17.30	1.172	62.9	1.006	-0.19	0.616	0.726
	LTE Band 41_UAT	20M	QPSK	1	49	Right Cheek	0mm	Reduced	40185	2549.5	16.89	17.30	1.099	62.9	1.006	0.17	0.527	0.583
	LTE Band 41_UAT	20M	QPSK	1	49	Right Cheek	0mm	Reduced	41055	2636.5	17.13	17.30	1.040	62.9	1.006	0.15	0.406	0.425
	LTE Band 41_UAT	20M	QPSK	1	49	Right Cheek	0mm	Reduced	41490	2680	17.05	17.30	1.059	62.9	1.006	0.11	0.391	0.417
	LTE Band 41_UAT	20M	QPSK	50	24	Right Cheek	0mm	Reduced	40620	2593	17.12	17.30	1.042	62.9	1.006	0.16	0.461	0.483
	LTE Band 41_UAT	20M	QPSK	50	24	Right Tilted	0mm	Reduced	40620	2593	17.12	17.30	1.042	62.9	1.006	-0.08	0.445	0.467
	LTE Band 41_UAT	20M	QPSK	50	24	Left Cheek	0mm	Reduced	40620	2593	17.12	17.30	1.042	62.9	1.006	-0.09	0.384	0.403
	LTE Band 41_UAT	20M	QPSK	50	24	Left Tilted	0mm	Reduced	40620	2593	17.12	17.30	1.042	62.9	1.006	0.15	0.398	0.417
	LTE Band 41_UAT	20M	QPSK	50	24	Right Cheek	0mm	Reduced	39790	2510	16.73	17.30	1.140	62.9	1.006	-0.14	0.627	0.719
18	LTE Band 41_UAT	20M	QPSK	50	24	Right Cheek	0mm	Reduced	39750	2506	16.73	17.30	1.140	62.9	1.006	-0.05	0.663	0.761
	LTE Band 41_UAT	20M	QPSK	50	24	Right Cheek	0mm	Reduced	40185	2549.5	17.02	17.30	1.067	62.9	1.006	-0.13	0.545	0.585
	LTE Band 41_UAT	20M	QPSK	50	24	Right Cheek	0mm	Reduced	41055	2636.5	17.11	17.30	1.045	62.9	1.006	-0.17	0.412	0.433
	LTE Band 41_UAT	20M	QPSK	50	24	Right Cheek	0mm	Reduced	41490	2680	17.10	17.30	1.047	62.9	1.006	0.04	0.398	0.419
	LTE Band 41_UAT	20M	QPSK	100	0	Right Cheek	0mm	Reduced	40620	2593	17.11	17.30	1.045	62.9	1.006	0.16	0.464	0.488
	LTE Band 41_UAT	20M	QPSK	100	0	Right Cheek	0mm	Reduced	39790	2510	16.72	17.30	1.143	62.9	1.006	0.05	0.606	0.697
	LTE Band 41_UAT	20M	QPSK	100	0	Right Cheek	0mm	Reduced	39750	2506	16.76	17.30	1.132	62.9	1.006	-0.06	0.612	0.697
	LTE Band 41_UAT	20M	QPSK	100	0	Right Cheek	0mm	Reduced	40185	2549.5	16.91	17.30	1.094	62.9	1.006	-0.09	0.526	0.579
	LTE Band 41_UAT	20M	QPSK	100	0	Right Cheek	0mm	Reduced	41055	2636.5	17.10	17.30	1.047	62.9	1.006	-0.13	0.387	0.408
	LTE Band 41_UAT	20M	QPSK	100	0	Right Cheek	0mm	Reduced	41490	2680	17.09	17.30	1.050	62.9	1.006	-0.15	0.363	0.383
	LTE Band 41C_UAT	20M	QPSK	1	0	Right Cheek	0mm	Reduced	40620	2593	17.29	17.30	1.002	62.9	1.006	-0.04	0.701	0.707
	LTE Band 41_LAT	20M	QPSK	1	49	Right Cheek	0mm	Full	40620	2593	23.60	23.80	1.047	62.9	1.006	-0.01	0.119	0.125
	LTE Band 41_LAT	20M	QPSK	1	49	Right Tilted	0mm	Full	40620	2593	23.60	23.80	1.047	62.9	1.006	0.01	0.093	0.098
	LTE Band 41_LAT	20M	QPSK	1	49	Left Cheek	0mm	Full	40620	2593	23.60	23.80	1.047	62.9	1.006	0.02	0.209	0.220
	LTE Band 41_LAT	20M	QPSK	1	49	Left Tilted	0mm	Full	40620	2593	23.60	23.80	1.047	62.9	1.006	0.01	0.044	0.046
	LTE Band 41_LAT	20M	QPSK	1	49	Left Cheek	0mm	Full	39790	2510	23.55	23.80	1.059	62.9	1.006	0.01	0.153	0.163
	LTE Band 41_LAT	20M	QPSK	1	49	Left Cheek	0mm	Full	39750	2506	23.58	23.80	1.052	62.9	1.006	0.03	0.154	0.163
	LTE Band 41_LAT	20M	QPSK	1	49	Left Cheek	0mm	Full	40185	2549.5	23.57	23.80	1.054	62.9	1.006	0.03	0.178	0.189
	LTE Band 41_LAT	20M	QPSK	1	49	Left Cheek	0mm	Full	41055	2636.5	23.45	23.80	1.084	62.9	1.006	0.04	0.200	0.218
	LTE Band 41_LAT	20M	QPSK	1	49	Left Cheek	0mm	Full	41490	2680	23.30	23.80	1.122	62.9	1.006	0.02	0.272	0.307
	LTE Band 41_LAT	20M	QPSK	50	24	Right Cheek	0mm	Full	40620	2593	22.65	22.80	1.035	62.9	1.006	0.02	0.099	0.103
	LTE Band 41_LAT	20M	QPSK	50	24	Right Tilted	0mm	Full	40620	2593	22.65	22.80	1.035	62.9	1.006	0.02	0.076	0.079
	LTE Band 41_LAT	20M	QPSK	50	24	Left Cheek	0mm	Full	40620	2593	22.65	22.80	1.035	62.9	1.006	0.02	0.161	0.168
	LTE Band 41_LAT	20M	QPSK	50	24	Left Tilted	0mm	Full	40620	2593	22.65	22.80	1.035	62.9	1.006	0.02	0.036	0.037
	LTE Band 41C_LAT	20M	QPSK	1	0	Left Cheek	0mm	Full	41490	2680	23.79	23.80	1.002	62.9	1.006	0.01	0.278	0.280
	LTE Band 41(HPUE)_UAT	20M	QPSK	1	49	Right Cheek	0mm	Reduced	40620	2593	18.16	18.30	1.033	42.9	1.009	-0.08	0.392	0.408
	LTE Band 41(HPUE)_UAT	20M	QPSK	1	49	Right Tilted	0mm	Reduced	40620	2593	18.16	18.30	1.033	42.9	1.009	0.09	0.367	0.382
	LTE Band 41(HPUE)_UAT	20M	QPSK	1	49	Left Cheek	0mm	Reduced	40620	2593	18.16	18.30	1.033	42.9	1.009	0.16	0.314	0.327
	LTE Band 41(HPUE)_UAT	20M	QPSK	1	49	Left Tilted	0mm	Reduced	40620	2593	18.16	18.30	1.033	42.9	1.009	-0.08	0.315	0.328
	LTE Band 41(HPUE)_UAT	20M	QPSK	1	49	Right Cheek	0mm	Reduced	39750	2506	17.51	18.30	1.199	42.9	1.009	0.01	0.590	0.714
	LTE Band 41(HPUE)_UAT	20M	QPSK	1	49	Right Cheek	0mm	Reduced	40185	2549.5	17.86	18.30	1.107	42.9	1.009	-0.14	0.420	0.469
	LTE Band 41(HPUE)_UAT	20M	QPSK	1	49	Right Cheek	0mm	Reduced	41055	2636.5	18.05	18.30	1.059	42.9	1.009	-0.05	0.318	0.340
	LTE Band 41(HPUE)_UAT	20M	QPSK	1	49	Right Cheek	0mm	Reduced	41490	2680	17.98	18.30	1.076	42.9	1.009	-0.13	0.310	0.337
	LTE Band 41(HPUE)_UAT	20M	QPSK	50	24	Right Cheek	0mm	Reduced	40620	2593	18.09	18.30	1.050	42.9	1.009	-0.15	0.400	0.424
	LTE Band 41(HPUE)_UAT	20M	QPSK	50	24	Right Tilted	0mm	Reduced	40620	2593	18.09	18.30	1.050	42.9	1.009	-0.06	0.387	0.410
	LTE Band 41(HPUE)_UAT	20M	QPSK	50	24	Left Cheek	0mm	Reduced	40620	2593	18.09	18.30	1.050	42.9	1.009	-0.12	0.318	0.337
	LTE Band 41(HPUE)_UAT	20M	QPSK	50	24	Left Tilted	0mm	Reduced	40620	2593	18.09	18.30	1.050	42.9	1.009	-0.05	0.324	0.343

	LTE Band 41(HPUE)_UAT	20M	QPSK	50	24	Right Cheek	0mm	Reduced	39750	2506	17.73	18.30	1.140	42.9	1.009	-0.07	0.518	0.596
	LTE Band 41(HPUE)_UAT	20M	QPSK	50	24	Right Cheek	0mm	Reduced	40185	2549.5	17.97	18.30	1.079	42.9	1.009	-0.04	0.435	0.474
	LTE Band 41(HPUE)_UAT	20M	QPSK	50	24	Right Cheek	0mm	Reduced	41055	2636.5	18.06	18.30	1.057	42.9	1.009	-0.17	0.330	0.352
	LTE Band 41(HPUE)_UAT	20M	QPSK	50	24	Right Cheek	0mm	Reduced	41490	2680	18.05	18.30	1.059	42.9	1.009	0.06	0.317	0.339
	LTE Band 41(HPUE)_UAT	20M	QPSK	100	0	Right Cheek	0mm	Reduced	40620	2593	18.08	18.30	1.052	42.9	1.009	-0.19	0.392	0.416
	LTE Band 41(HPUE)_UAT	20M	QPSK	100	0	Right Cheek	0mm	Reduced	39750	2506	17.82	18.30	1.117	42.9	1.009	0.15	0.416	0.469
	LTE Band 41(HPUE)_UAT	20M	QPSK	100	0	Right Cheek	0mm	Reduced	40185	2549.5	17.91	18.30	1.094	42.9	1.009	0.11	0.441	0.487
	LTE Band 41(HPUE)_UAT	20M	QPSK	100	0	Right Cheek	0mm	Reduced	41055	2636.5	18.05	18.30	1.059	42.9	1.009	-0.04	0.324	0.346
	LTE Band 41(HPUE)_UAT	20M	QPSK	100	0	Right Cheek	0mm	Reduced	41490	2680	18.05	18.30	1.059	42.9	1.009	-0.12	0.303	0.324
	LTE Band 41C(HPUE)_UAT	20M	QPSK	1	0	Right Cheek	0mm	Reduced	40620	2593	18.09	18.30	1.050	42.9	1.009	0.06	0.658	0.697
	LTE Band 41(HPUE)_LAT	20M	QPSK	1	49	Right Cheek	0mm	Full	40620	2593	25.72	26.30	1.143	42.9	1.009	0.04	0.134	0.155
	LTE Band 41(HPUE)_LAT	20M	QPSK	1	49	Right Tilted	0mm	Full	40620	2593	25.72	26.30	1.143	42.9	1.009	0.01	0.100	0.115
	LTE Band 41(HPUE)_LAT	20M	QPSK	1	49	Left Cheek	0mm	Full	40620	2593	25.72	26.30	1.143	42.9	1.009	0.04	0.211	0.243
	LTE Band 41(HPUE)_LAT	20M	QPSK	1	49	Left Tilted	0mm	Full	40620	2593	25.72	26.30	1.143	42.9	1.009	0.03	0.066	0.076
	LTE Band 41(HPUE)_LAT	20M	QPSK	1	49	Left Cheek	0mm	Full	39750	2506	25.65	26.30	1.161	42.9	1.009	0.01	0.171	0.200
	LTE Band 41(HPUE)_LAT	20M	QPSK	1	49	Left Cheek	0mm	Full	40185	2549.5	25.59	26.30	1.178	42.9	1.009	0.01	0.196	0.233
	LTE Band 41(HPUE)_LAT	20M	QPSK	1	49	Left Cheek	0mm	Full	41055	2636.5	25.66	26.30	1.159	42.9	1.009	-0.05	0.205	0.240
	LTE Band 41(HPUE)_LAT	20M	QPSK	1	49	Left Cheek	0mm	Full	41490	2680	25.56	26.30	1.186	42.9	1.009	0.01	0.217	0.260
	LTE Band 41(HPUE)_LAT	20M	QPSK	50	24	Right Cheek	0mm	Full	40620	2593	24.89	25.30	1.099	42.9	1.009	0.01	0.122	0.135
	LTE Band 41(HPUE)_LAT	20M	QPSK	50	24	Right Tilted	0mm	Full	40620	2593	24.89	25.30	1.099	42.9	1.009	0.03	0.081	0.089
	LTE Band 41(HPUE)_LAT	20M	QPSK	50	24	Left Cheek	0mm	Full	40620	2593	24.89	25.30	1.099	42.9	1.009	0.01	0.196	0.217
	LTE Band 41(HPUE)_LAT	20M	QPSK	50	24	Left Tilted	0mm	Full	40620	2593	24.89	25.30	1.099	42.9	1.009	0.04	0.051	0.057
	LTE Band 41C(HPUE)_LAT	20M	QPSK	1	0	Left Cheek	0mm	Full	41055	2636.5	24.96	26.30	1.361	42.9	1.009	-0.04	0.165	0.227
	LTE Band 48_UAT	20M	QPSK	1	49	Right Cheek	0mm	Reduced	55830	3609	14.09	14.30	1.050	62.9	1.006	-0.06	0.483	0.510
	LTE Band 48_UAT	20M	QPSK	1	49	Right Tilted	0mm	Reduced	55830	3609	14.09	14.30	1.050	62.9	1.006	0.06	0.558	0.589
	LTE Band 48_UAT	20M	QPSK	1	49	Left Cheek	0mm	Reduced	55830	3609	14.09	14.30	1.050	62.9	1.006	-0.15	0.272	0.287
	LTE Band 48_UAT	20M	QPSK	1	49	Left Tilted	0mm	Reduced	55830	3609	14.09	14.30	1.050	62.9	1.006	0.01	0.313	0.330
	LTE Band 48_UAT	20M	QPSK	50	24	Right Cheek	0mm	Reduced	55830	3609	14.05	14.30	1.059	62.9	1.006	-0.06	0.490	0.522
	LTE Band 48_UAT	20M	QPSK	50	24	Right Tilted	0mm	Reduced	55830	3609	14.05	14.30	1.059	62.9	1.006	-0.03	0.595	0.634
	LTE Band 48_UAT	20M	QPSK	50	24	Left Cheek	0mm	Reduced	55830	3609	14.05	14.30	1.059	62.9	1.006	0.03	0.283	0.302
	LTE Band 48_UAT	20M	QPSK	50	24	Left Tilted	0mm	Reduced	55830	3609	14.05	14.30	1.059	62.9	1.006	0.06	0.322	0.343
	LTE Band 48_UAT	20M	QPSK	50	24	Right Tilted	0mm	Reduced	55340	3560	13.52	14.30	1.197	62.9	1.006	-0.19	0.579	0.697
	LTE Band 48_UAT	20M	QPSK	50	24	Right Tilted	0mm	Reduced	56150	3641	13.95	14.30	1.084	62.9	1.006	0.11	0.665	0.725
	LTE Band 48_UAT	20M	QPSK	50	24	Right Tilted	0mm	Reduced	56640	3690	14.00	14.30	1.072	62.9	1.006	0.06	0.718	0.774
19	LTE Band 48_UAT	20M	QPSK	50	24	Right Tilted	0mm	Reduced	56640	3690	14.00	14.30	1.072	62.9	1.006	0.1	0.846	0.912
	LTE Band 48_UAT	20M	QPSK	100	0	Right Tilted	0mm	Reduced	55830	3609	14.06	14.30	1.057	62.9	1.006	-0.19	0.606	0.644
	LTE Band 48_UAT	20M	QPSK	100	0	Right Tilted	0mm	Reduced	55340	3560	13.48	14.30	1.208	62.9	1.006	0.17	0.566	0.688
	LTE Band 48_UAT	20M	QPSK	100	0	Right Tilted	0mm	Reduced	56150	3641	13.85	14.30	1.109	62.9	1.006	0.15	0.657	0.733
	LTE Band 48_UAT	20M	QPSK	100	0	Right Tilted	0mm	Reduced	56640	3690	13.78	14.30	1.127	62.9	1.006	0.11	0.686	0.778
	LTE Band 48C_UAT	20M	QPSK	1	0	Right Tilted	0mm	Reduced	56150	3641	13.96	14.30	1.081	62.9	1.006	0.03	0.726	0.790

<5G NR NSA SAR>

Plot No.	Band	BW (MHz)	Modulation	RB Size	RB offset	Mode	Test Position	Gap (mm)	Power Reduction	Ch.	Freq. (MHz)	Average Power (dBm)	Tune-Up Limit (dBm)	Tune-up Scaling Factor	Power Drift (dB)	Measured 1g SAR (W/kg)	Reported 1g SAR (W/kg)
	N2_UAT	20M	PI/2 BPSK	1	53	DFT-15	Right Cheek	0mm	Reduced	376000	1880	14.05	15.00	1.245	0.06	0.435	0.541
	N2_UAT	20M	PI/2 BPSK	50	28	DFT-15	Right Cheek	0mm	Reduced	376000	1880	14.03	15.00	1.250	0.17	0.431	0.539
	N2_UAT	20M	PI/2 BPSK	1	53	DFT-15	Right Tilted	0mm	Reduced	376000	1880	14.05	15.00	1.245	0	0.573	0.713
	N2_UAT	20M	PI/2 BPSK	1	53	DFT-15	Right Tilted	0mm	Reduced	372000	1860	13.70	15.00	1.349	0.03	0.478	0.645
20	N2_UAT	20M	PI/2 BPSK	1	53	DFT-15	Right Tilted	0mm	Reduced	380000	1900	14.03	15.00	1.250	-0.15	0.576	0.720
	N2_UAT	20M	PI/2 BPSK	50	28	DFT-15	Right Tilted	0mm	Reduced	376000	1880	14.03	15.00	1.250	-0.06	0.569	0.711
	N2_UAT	20M	PI/2 BPSK	100	0	DFT-15	Right Tilted	0mm	Reduced	376000	1880	13.98	15.00	1.265	0.17	0.569	0.720
	N2_UAT	20M	PI/2 BPSK	1	53	DFT-15	Left Cheek	0mm	Reduced	376000	1880	14.05	15.00	1.245	-0.14	0.293	0.365
	N2_UAT	20M	PI/2 BPSK	50	28	DFT-15	Left Cheek	0mm	Reduced	376000	1880	14.03	15.00	1.250	0.04	0.286	0.358
	N2_UAT	20M	PI/2 BPSK	1	53	DFT-15	Left Tilted	0mm	Reduced	376000	1880	14.05	15.00	1.245	-0.12	0.394	0.490
	N2_UAT	20M	PI/2 BPSK	50	28	DFT-15	Left Tilted	0mm	Reduced	376000	1880	14.03	15.00	1.250	0.05	0.398	0.498
	N2_LAT	20M	PI/2 BPSK	1	1	DFT-15	Right Cheek	0mm	Full	376000	1880	22.92	23.80	1.225	-0.03	0.166	0.204
	N2_LAT	20M	PI/2 BPSK	50	0	DFT-15	Right Cheek	0mm	Full	380000	1900	22.88	23.80	1.236	-0.07	0.175	0.216
	N2_LAT	20M	PI/2 BPSK	50	0	DFT-15	Right Cheek	0mm	Full	372000	1860	22.47	23.80	1.358	-0.06	0.142	0.193
	N2_LAT	20M	PI/2 BPSK	50	0	DFT-15	Right Cheek	0mm	Full	376000	1880	22.83	23.80	1.250	0.05	0.156	0.195
	N2_LAT	20M	PI/2 BPSK	1	1	DFT-15	Right Tilted	0mm	Full	376000	1880	22.92	23.80	1.225	-0.05	0.088	0.108
	N2_LAT	20M	PI/2 BPSK	50	0	DFT-15	Right Tilted	0mm	Full	380000	1900	22.88	23.80	1.236	-0.06	0.103	0.128
	N2_LAT	20M	PI/2 BPSK	1	1	DFT-15	Left Cheek	0mm	Full	376000	1880	22.92	23.80	1.225	0.07	0.115	0.140
	N2_LAT	20M	PI/2 BPSK	50	0	DFT-15	Left Cheek	0mm	Full	380000	1900	22.88	23.80	1.236	-0.05	0.097	0.120
	N2_LAT	20M	PI/2 BPSK	1	1	DFT-15	Left Tilted	0mm	Full	376000	1880	22.92	23.80	1.225	0.11	0.086	0.105
	N2_LAT	20M	PI/2 BPSK	50	0	DFT-15	Left Tilted	0mm	Full	380000	1900	22.88	23.80	1.236	0.15	0.084	0.104
	N5_UAT	20M	PI/2 BPSK	1	1	DFT-15	Right Cheek	0mm	Reduced	166800	834	19.10	20.00	1.230	-0.02	0.205	0.253
	N5_UAT	20M	PI/2 BPSK	50	0	DFT-15	Right Cheek	0mm	Reduced	166800	834	19.05	20.00	1.245	0.06	0.175	0.218
	N5_UAT	20M	PI/2 BPSK	1	1	DFT-15	Right Tilted	0mm	Reduced	166800	834	19.10	20.00	1.230	-0.09	0.075	0.092
	N5_UAT	20M	PI/2 BPSK	50	0	DFT-15	Right Tilted	0mm	Reduced	166800	834	19.05	20.00	1.245	0.03	0.045	0.056
	N5_UAT	20M	PI/2 BPSK	1	1	DFT-15	Left Cheek	0mm	Reduced	166800	834	19.10	20.00	1.230	-0.13	0.231	0.284
	N5_UAT	20M	PI/2 BPSK	50	0	DFT-15	Left Cheek	0mm	Reduced	166800	834	19.05	20.00	1.245	-0.04	0.246	0.306
	N5_UAT	20M	PI/2 BPSK	50	0	DFT-15	Left Cheek	0mm	Reduced	167300	836.5	19.01	20.00	1.256	-0.1	0.256	0.321
21	N5_UAT	20M	PI/2 BPSK	50	0	DFT-15	Left Cheek	0mm	Reduced	167800	839	19.01	20.00	1.256	-0.15	0.286	0.359
	N5_UAT	20M	PI/2 BPSK	1	1	DFT-15	Left Tilted	0mm	Reduced	166800	834	19.10	20.00	1.230	0.09	0.020	0.025
	N5_UAT	20M	PI/2 BPSK	50	0	DFT-15	Left Tilted	0mm	Reduced	166800	834	19.05	20.00	1.245	0.14	0.030	0.037
	N5_LAT	20M	PI/2 BPSK	1	1	DFT-15	Right Cheek	0mm	Full	166800	834	23.31	23.80	1.119	0.05	0.097	0.108
	N5_LAT	20M	PI/2 BPSK	50	0	DFT-15	Right Cheek	0mm	Full	166800	834	23.28	23.80	1.127	-0.04	0.098	0.111
	N5_LAT	20M	PI/2 BPSK	1	1	DFT-15	Right Tilted	0mm	Full	166800	834	23.31	23.80	1.119	0.01	0.062	0.069
	N5_LAT	20M	PI/2 BPSK	50	0	DFT-15	Right Tilted	0mm	Full	166800	834	23.28	23.80	1.127	-0.07	0.062	0.070
	N5_LAT	20M	PI/2 BPSK	1	1	DFT-15	Left Cheek	0mm	Full	166800	834	23.31	23.80	1.119	-0.1	0.132	0.147
	N5_LAT	20M	PI/2 BPSK	50	0	DFT-15	Left Cheek	0mm	Full	166800	834	23.28	23.80	1.127	-0.17	0.139	0.157
	N5_LAT	20M	PI/2 BPSK	50	0	DFT-15	Left Cheek	0mm	Full	167300	836.5	23.21	23.80	1.146	-0.1	0.136	0.156
	N5_LAT	20M	PI/2 BPSK	50	0	DFT-15	Left Cheek	0mm	Full	167800	839	23.16	23.80	1.159	-0.13	0.135	0.156
	N5_LAT	20M	PI/2 BPSK	1	1	DFT-15	Left Tilted	0mm	Full	166800	834	23.31	23.80	1.119	-0.09	0.061	0.068
	N5_LAT	20M	PI/2 BPSK	50	0	DFT-15	Left Tilted	0mm	Full	166800	834	23.28	23.80	1.127	-0.1	0.059	0.067

Plot No.	Band	BW (MHz)	Modulation	RB Size	RB offset	Mode	Test Position	Gap (mm)	Power Reduction	Ch.	Freq. (MHz)	Average Power (dBm)	Tune-Up Limit (dBm)	Tune-up Scaling Factor	Power Drift (dB)	Measured 1g SAR (W/kg)	Reported 1g SAR (W/kg)
	N41_UAT	100M	PI/2 BPSK	1	1	DFT-30	Right Cheek	0mm	Reduced	528000	2640	15.39	16.50	1.291	-0.06	0.423	0.546
	N41_UAT	100M	PI/2 BPSK	135	69	DFT-30	Right Cheek	0mm	Reduced	528000	2640	15.20	16.50	1.349	-0.01	0.510	0.688
	N41_UAT	100M	PI/2 BPSK	135	69	DFT-30	Right Cheek	0mm	Reduced	509200	2546	14.68	16.50	1.521	-0.03	0.248	0.377
	N41_UAT	100M	PI/2 BPSK	135	69	DFT-30	Right Cheek	0mm	Reduced	518600	2593	15.13	16.50	1.371	-0.11	0.361	0.495
	N41_UAT	100M	PI/2 BPSK	270	0	DFT-30	Right Cheek	0mm	Reduced	528000	2640	15.10	16.50	1.380	-0.15	0.503	0.694
	N41_UAT	100M	PI/2 BPSK	1	1	DFT-30	Right Tilted	0mm	Reduced	528000	2640	15.39	16.50	1.291	-0.07	0.428	0.553
22	N41_UAT	100M	PI/2 BPSK	135	69	DFT-30	Right Tilted	0mm	Reduced	528000	2640	15.20	16.50	1.349	-0.19	0.556	0.750
	N41_UAT	100M	PI/2 BPSK	135	69	DFT-30	Right Tilted	0mm	Reduced	509200	2546	14.68	16.50	1.521	-0.18	0.272	0.414
	N41_UAT	100M	PI/2 BPSK	135	69	DFT-30	Right Tilted	0mm	Reduced	518600	2593	15.13	16.50	1.371	-0.12	0.393	0.539
	N41_UAT	100M	PI/2 BPSK	270	0	DFT-30	Right Tilted	0mm	Reduced	528000	2640	15.10	16.50	1.380	-0.03	0.535	0.739
	N41_UAT	100M	PI/2 BPSK	1	1	DFT-30	Left Cheek	0mm	Reduced	528000	2640	15.39	16.50	1.291	-0.03	0.262	0.338
	N41_UAT	100M	PI/2 BPSK	135	69	DFT-30	Left Cheek	0mm	Reduced	528000	2640	15.20	16.50	1.349	0	0.304	0.410
	N41_UAT	100M	PI/2 BPSK	1	1	DFT-30	Left Tilted	0mm	Reduced	528000	2640	15.39	16.50	1.291	0.15	0.306	0.395
	N41_UAT	100M	PI/2 BPSK	135	69	DFT-30	Left Tilted	0mm	Reduced	528000	2640	15.20	16.50	1.349	-0.01	0.384	0.518
	N41_LAT	100M	PI/2 BPSK	1	1	DFT-30	Right Cheek	0mm	Full	518600	2593	23.43	23.80	1.089	0.09	0.115	0.126
	N41_LAT	100M	PI/2 BPSK	135	0	DFT-30	Right Cheek	0mm	Full	518600	2593	23.41	23.80	1.094	0.05	0.124	0.135
	N41_LAT	100M	PI/2 BPSK	1	1	DFT-30	Right Tilted	0mm	Full	518600	2593	23.43	23.80	1.089	0.13	0.162	0.177
	N41_LAT	100M	PI/2 BPSK	135	0	DFT-30	Right Tilted	0mm	Full	518600	2593	23.41	23.80	1.094	0.03	0.156	0.171
	N41_LAT	100M	PI/2 BPSK	1	1	DFT-30	Left Cheek	0mm	Full	518600	2593	23.43	23.80	1.089	0.17	0.228	0.249
	N41_LAT	100M	PI/2 BPSK	135	0	DFT-30	Left Cheek	0mm	Full	518600	2593	23.41	23.80	1.094	0.01	0.226	0.247
	N41_LAT	100M	PI/2 BPSK	1	1	DFT-30	Left Tilted	0mm	Full	518600	2593	23.43	23.80	1.089	0.12	0.130	0.141
	N41_LAT	100M	PI/2 BPSK	135	0	DFT-30	Left Tilted	0mm	Full	518600	2593	23.41	23.80	1.094	0.04	0.089	0.097

Plot No.	Band	BW (MHz)	Modulation	RB Size	RB offset	Mode	Test Position	Gap (mm)	Power Reduction	Ch.	Freq. (MHz)	Average Power (dBm)	Tune-Up Limit (dBm)	Tune-up Scaling Factor	Power Drift (dB)	Measured 1g SAR (W/kg)	Reported 1g SAR (W/kg)
	N66_UAT	20M	PI/2 BPSK	1	1	DFT-15	Right Cheek	0mm	Reduced	344000	1720	13.81	14.50	1.172	-0.13	0.379	0.444
	N66_UAT	20M	PI/2 BPSK	50	0	DFT-15	Right Cheek	0mm	Reduced	344000	1720	13.60	14.50	1.230	-0.15	0.346	0.426
	N66_UAT	20M	PI/2 BPSK	1	1	DFT-15	Right Tilted	0mm	Reduced	344000	1720	13.81	14.50	1.172	0.01	0.361	0.423
	N66_UAT	20M	PI/2 BPSK	50	0	DFT-15	Right Tilted	0mm	Reduced	344000	1720	13.60	14.50	1.230	-0.1	0.374	0.460
	N66_UAT	20M	PI/2 BPSK	50	0	DFT-15	Right Tilted	0mm	Reduced	349000	1745	13.37	14.50	1.297	-0.16	0.477	0.618
23	N66_UAT	20M	PI/2 BPSK	50	0	DFT-15	Right Tilted	0mm	Reduced	354000	1770	13.59	14.50	1.233	-0.09	0.533	0.657
	N66_UAT	20M	PI/2 BPSK	100	0	DFT-15	Right Tilted	0mm	Reduced	344000	1720	13.31	14.50	1.315	-0.15	0.357	0.470
	N66_UAT	20M	PI/2 BPSK	1	1	DFT-15	Left Cheek	0mm	Reduced	344000	1720	13.81	14.50	1.172	-0.16	0.265	0.310
	N66_UAT	20M	PI/2 BPSK	50	0	DFT-15	Left Cheek	0mm	Reduced	344000	1720	13.60	14.50	1.230	-0.13	0.250	0.308
	N66_UAT	20M	PI/2 BPSK	1	1	DFT-15	Left Tilted	0mm	Reduced	344000	1720	13.81	14.50	1.172	-0.04	0.286	0.335
	N66_UAT	20M	PI/2 BPSK	50	0	DFT-15	Left Tilted	0mm	Reduced	344000	1720	13.60	14.50	1.230	-0.09	0.269	0.331
	N66_LAT	20M	PI/2 BPSK	1	1	DFT-15	Right Cheek	0mm	Full	349000	1745	23.27	23.80	1.130	-0.1	0.119	0.134
	N66_LAT	20M	PI/2 BPSK	50	0	DFT-15	Right Cheek	0mm	Full	349000	1745	23.25	23.80	1.135	-0.17	0.109	0.124
	N66_LAT	20M	PI/2 BPSK	1	1	DFT-15	Right Tilted	0mm	Full	349000	1745	23.27	23.80	1.130	-0.1	0.113	0.127
	N66_LAT	20M	PI/2 BPSK	50	0	DFT-15	Right Tilted	0mm	Full	349000	1745	23.25	23.80	1.135	-0.12	0.105	0.119
	N66_LAT	20M	PI/2 BPSK	1	1	DFT-15	Left Cheek	0mm	Full	349000	1745	23.27	23.80	1.130	-0.06	0.170	0.192
	N66_LAT	20M	PI/2 BPSK	1	1	DFT-15	Left Cheek	0mm	Full	344000	1720	23.25	23.80	1.135	-0.05	0.162	0.184
	N66_LAT	20M	PI/2 BPSK	1	1	DFT-15	Left Cheek	0mm	Full	354000	1770	23.13	23.80	1.167	0.17	0.182	0.213
	N66_LAT	20M	PI/2 BPSK	50	0	DFT-15	Left Cheek	0mm	Full	349000	1745	23.25	23.80	1.135	-0.13	0.164	0.186
	N66_LAT	20M	PI/2 BPSK	1	1	DFT-15	Left Tilted	0mm	Full	349000	1745	23.27	23.80	1.130	0.07	0.105	0.119
	N66_LAT	20M	PI/2 BPSK	50	0	DFT-15	Left Tilted	0mm	Full	349000	1745	23.25	23.80	1.135	-0.05	0.095	0.108
	N71_UAT	20M	PI/2 BPSK	1	1	DFT-15	Right Cheek	0mm	Reduced	134600	673	18.38	19.00	1.153	-0.08	0.187	0.216
	N71_UAT	20M	PI/2 BPSK	50	0	DFT-15	Right Cheek	0mm	Reduced	134600	673	18.36	19.00	1.159	-0.03	0.159	0.185
	N71_UAT	20M	PI/2 BPSK	1	1	DFT-15	Right Tilted	0mm	Reduced	134600	673	18.38	19.00	1.153	-0.04	0.036	0.041
	N71_UAT	20M	PI/2 BPSK	50	0	DFT-15	Right Tilted	0mm	Reduced	134600	673	18.36	19.00	1.159	0.07	0.040	0.046
	N71_UAT	20M	PI/2 BPSK	1	1	DFT-15	Left Cheek	0mm	Reduced	134600	673	18.38	19.00	1.153	-0.06	0.171	0.197
	N71_UAT	20M	PI/2 BPSK	50	0	DFT-15	Left Cheek	0mm	Reduced	134600	673	18.36	19.00	1.159	-0.15	0.215	0.249
24	N71_UAT	20M	PI/2 BPSK	50	0	DFT-15	Left Cheek	0mm	Reduced	136100	680.5	18.16	19.00	1.213	0.05	0.231	0.280
	N71_UAT	20M	PI/2 BPSK	50	0	DFT-15	Left Cheek	0mm	Reduced	137600	688	18.12	19.00	1.225	-0.13	0.203	0.249
	N71_UAT	20M	PI/2 BPSK	1	1	DFT-15	Left Tilted	0mm	Reduced	134600	673	18.38	19.00	1.153	0.19	0.020	0.023
	N71_UAT	20M	PI/2 BPSK	50	0	DFT-15	Left Tilted	0mm	Reduced	134600	673	18.36	19.00	1.159	0.12	0.036	0.042
	N71_LAT	20M	PI/2 BPSK	1	1	DFT-15	Right Cheek	0mm	Full	136100	680.5	23.25	23.80	1.135	-0.05	0.094	0.107
	N71_LAT	20M	PI/2 BPSK	50	0	DFT-15	Right Cheek	0mm	Full	136100	680.5	23.23	23.80	1.140	-0.09	0.089	0.102
	N71_LAT	20M	PI/2 BPSK	1	1	DFT-15	Right Tilted	0mm	Full	136100	680.5	23.25	23.80	1.135	-0.1	0.045	0.052
	N71_LAT	20M	PI/2 BPSK	50	0	DFT-15	Right Tilted	0mm	Full	136100	680.5	23.23	23.80	1.140	-0.03	0.045	0.052
	N71_LAT	20M	PI/2 BPSK	1	1	DFT-15	Left Cheek	0mm	Full	136100	680.5	23.25	23.80	1.135	-0.04	0.109	0.124
	N71_LAT	20M	PI/2 BPSK	1	1	DFT-15	Left Cheek	0mm	Full	134600	673	23.09	23.80	1.178	-0.05	0.123	0.144
	N71_LAT	20M	PI/2 BPSK	1	1	DFT-15	Left Cheek	0mm	Full	137600	688	23.13	23.80	1.167	-0.02	0.107	0.125
	N71_LAT	20M	PI/2 BPSK	50	0	DFT-15	Left Cheek	0mm	Full	136100	680.5	23.23	23.80	1.140	-0.08	0.103	0.117
	N71_LAT	20M	PI/2 BPSK	1	1	DFT-15	Left Tilted	0mm	Full	136100	680.5	23.25	23.80	1.135	-0.07	0.044	0.050
	N71_LAT	20M	PI/2 BPSK	50	0	DFT-15	Left Tilted	0mm	Full	136100	680.5	23.23	23.80	1.140	0.04	0.042	0.048

<WLAN SAR>

Plot No.	Band	Mode	Test Position	Gap (mm)	output power state	Ch.	Freq. (MHz)	Average Power (dBm)	Tune-Up Limit (dBm)	Tune-up Scaling Factor	Duty Cycle %	Duty Cycle Scaling Factor	Power Drift (dB)	Measured 1g SAR (W/kg)	Reported 1g SAR (W/kg)
	WLAN2.4GHz	802.11b 1Mbps	Right Cheek	0mm	1	11	2462	14.91	16.91	1.585	100	1.000	0.06	0.145	0.230
	WLAN2.4GHz	802.11b 1Mbps	Right Tilted	0mm	1	11	2462	14.91	16.91	1.585	100	1.000	-0.15	0.093	0.147
25	WLAN2.4GHz	802.11b 1Mbps	Left Cheek	0mm	1	11	2462	14.91	16.91	1.585	100	1.000	-0.01	0.645	1.022
	WLAN2.4GHz	802.11b 1Mbps	Left Tilted	0mm	1	11	2462	14.91	16.91	1.585	100	1.000	-0.03	0.283	0.449
	WLAN2.4GHz	802.11b 1Mbps	Left Cheek	0mm	1	1	2412	14.71	16.71	1.585	100	1.000	-0.04	0.535	0.848
	WLAN2.4GHz	802.11b 1Mbps	Left Cheek	0mm	1	6	2437	14.66	16.66	1.585	100	1.000	-0.17	0.460	0.729
	WLAN2.4GHz	802.11b 1Mbps	Right Cheek	0mm	2	11	2462	11.94	13.94	1.585	100	1.000	0.06	0.086	0.136
	WLAN2.4GHz	802.11b 1Mbps	Right Tilted	0mm	2	11	2462	11.94	13.94	1.585	100	1.000	0.02	0.082	0.130
	WLAN2.4GHz	802.11b 1Mbps	Left Cheek	0mm	2	11	2462	11.94	13.94	1.585	100	1.000	-0.03	0.308	0.488
	WLAN2.4GHz	802.11b 1Mbps	Left Tilted	0mm	2	11	2462	11.94	13.94	1.585	100	1.000	0.11	0.265	0.420
	WLAN2.4GHz	802.11b 1Mbps	Left Cheek	0mm	2	1	2412	11.76	13.76	1.585	100	1.000	0.15	0.276	0.437
	WLAN2.4GHz	802.11b 1Mbps	Left Cheek	0mm	2	6	2437	11.62	13.62	1.585	100	1.000	-0.11	0.262	0.415
	WLAN2.4GHz	802.11b 1Mbps	Right Cheek	0mm	3	11	2462	9.96	11.96	1.585	100	1.000	0.11	0.055	0.087
	WLAN2.4GHz	802.11b 1Mbps	Right Tilted	0mm	3	11	2462	9.96	11.96	1.585	100	1.000	-0.16	0.052	0.083
	WLAN2.4GHz	802.11b 1Mbps	Left Cheek	0mm	3	11	2462	9.96	11.96	1.585	100	1.000	-0.12	0.195	0.309
	WLAN2.4GHz	802.11b 1Mbps	Left Tilted	0mm	3	11	2462	9.96	11.96	1.585	100	1.000	-0.02	0.168	0.266
	WLAN2.4GHz	802.11b 1Mbps	Left Cheek	0mm	3	1	2412	9.71	11.71	1.585	100	1.000	0.05	0.172	0.273
	WLAN2.4GHz	802.11b 1Mbps	Left Cheek	0mm	3	6	2437	9.66	11.66	1.585	100	1.000	-0.16	0.167	0.265
	WLAN5GHz	802.11n-HT40 MCS0	Right Cheek	0mm	1/2	54	5270	19.91	21.91	1.585	98.08	1.020	0.14	0.145	0.234
	WLAN5GHz	802.11n-HT40 MCS0	Right Tilted	0mm	1/2	54	5270	19.91	21.91	1.585	98.08	1.020	0.09	0.167	0.270
	WLAN5GHz	802.11n-HT40 MCS0	Left Cheek	0mm	1/2	54	5270	19.91	21.91	1.585	98.08	1.020	0.15	0.199	0.322
	WLAN5GHz	802.11n-HT40 MCS0	Left Tilted	0mm	1/2	54	5270	19.91	21.91	1.585	98.08	1.020	-0.13	0.343	0.554
26	WLAN5GHz	802.11n-HT40 MCS0	Left Tilted	0mm	1/2	62	5310	19.80	21.80	1.585	98.08	1.020	0.15	0.347	0.561
	WLAN5GHz	802.11n-HT40 MCS0	Right Cheek	0mm	3	54	5270	17.92	19.92	1.585	98.08	1.020	-0.06	0.086	0.140
	WLAN5GHz	802.11n-HT40 MCS0	Right Tilted	0mm	3	54	5270	17.92	19.92	1.585	98.08	1.020	-0.09	0.115	0.186
	WLAN5GHz	802.11n-HT40 MCS0	Left Cheek	0mm	3	54	5270	17.92	19.92	1.585	98.08	1.020	-0.13	0.160	0.259
	WLAN5GHz	802.11n-HT40 MCS0	Left Tilted	0mm	3	54	5270	17.92	19.92	1.585	98.08	1.020	-0.15	0.200	0.323
	WLAN5GHz	802.11n-HT40 MCS0	Left Tilted	0mm	3	62	5310	17.80	19.80	1.585	98.08	1.020	0.16	0.173	0.280
	WLAN5GHz	802.11n-HT40 MCS0	Right Cheek	0mm	1/2/3	110	5550	17.44	19.44	1.585	98.08	1.020	-0.13	0.047	0.077
	WLAN5GHz	802.11n-HT40 MCS0	Right Tilted	0mm	1/2/3	110	5550	17.44	19.44	1.585	98.08	1.020	-0.06	0.053	0.086
	WLAN5GHz	802.11n-HT40 MCS0	Left Cheek	0mm	1/2/3	110	5550	17.44	19.44	1.585	98.08	1.020	-0.04	0.064	0.104
27	WLAN5GHz	802.11n-HT40 MCS0	Left Tilted	0mm	1/2/3	110	5550	17.44	19.44	1.585	98.08	1.020	0	0.099	0.161
	WLAN5GHz	802.11n-HT40 MCS0	Left Cheek	0mm	1/2/3	102	5510	17.40	19.40	1.585	98.08	1.020	-0.14	0.088	0.142
	WLAN5GHz	802.11n-HT40 MCS0	Left Cheek	0mm	1/2/3	126	5630	17.22	19.22	1.585	98.08	1.020	-0.04	0.094	0.153
	WLAN5GHz	802.11n-HT40 MCS0	Left Cheek	0mm	1/2/3	134	5670	17.01	19.01	1.585	98.08	1.020	-0.08	0.095	0.153
	WLAN5GHz	802.11n-HT40 MCS0	Left Cheek	0mm	1/2/3	142	5710	16.83	18.83	1.585	98.08	1.020	-0.17	0.070	0.112
	WLAN5GHz	802.11n-HT40 MCS0	Right Cheek	0mm	1/2/3	151	5755	17.52	19.52	1.585	98.08	1.020	0.18	0.024	0.039
	WLAN5GHz	802.11n-HT40 MCS0	Right Tilted	0mm	1/2/3	151	5755	17.52	19.52	1.585	98.08	1.020	-0.18	0.028	0.045
	WLAN5GHz	802.11n-HT40 MCS0	Left Cheek	0mm	1/2/3	151	5755	17.52	19.52	1.585	98.08	1.020	0.07	0.052	0.083
28	WLAN5GHz	802.11n-HT40 MCS0	Left Tilted	0mm	1/2/3	151	5755	17.52	19.52	1.585	98.08	1.020	0	0.062	0.100
	WLAN5GHz	802.11n-HT40 MCS0	Left Cheek	0mm	1/2/3	159	5795	17.23	19.23	1.585	98.08	1.020	0.09	0.056	0.090

<Bluetooth SAR>

Plot No.	Band	Mode	Test Position	Gap (mm)	Antenna	Power Reduction	Ch.	Freq. (MHz)	Average Power (dBm)	Tune-Up Limit (dBm)	Tune-up Scaling Factor	Power Drift (dB)	Measured 1g SAR (W/kg)	Reported 1g SAR (W/kg)
	Bluetooth	DH5 1Mbps	Right Cheek	0mm	Chain 0	Full	39	2441	8.61	10.61	1.585	0.06	0.021	0.033
	Bluetooth	DH5 1Mbps	Right Tilted	0mm	Chain 0	Full	39	2441	8.61	10.61	1.585	0.02	0.013	0.021
29	Bluetooth	DH5 1Mbps	Left Cheek	0mm	Chain 0	Full	39	2441	8.61	10.61	1.585	0.01	0.174	0.276
	Bluetooth	DH5 1Mbps	Left Tilted	0mm	Chain 0	Full	39	2441	8.61	10.61	1.585	-0.03	0.045	0.071
	Bluetooth	DH5 1Mbps	Left Cheek	0mm	Chain 0	Full	0	2402	7.66	9.66	1.585	0.05	0.122	0.193
	Bluetooth	DH5 1Mbps	Left Cheek	0mm	Chain 0	Full	78	2480	6.92	8.92	1.585	0.01	0.094	0.149
	Bluetooth	DH5 1Mbps	Right Cheek	0mm	Chain 1	Full	39	2441	8.52	10.52	1.585	0.01	0.040	0.063
	Bluetooth	DH5 1Mbps	Right Tilted	0mm	Chain 1	Full	39	2441	8.52	10.52	1.585	-0.18	0.037	0.059
	Bluetooth	DH5 1Mbps	Left Cheek	0mm	Chain 1	Full	39	2441	8.52	10.52	1.585	-0.11	0.140	0.222
	Bluetooth	DH5 1Mbps	Left Tilted	0mm	Chain 1	Full	39	2441	8.52	10.52	1.585	-0.05	0.121	0.192
	Bluetooth	DH5 1Mbps	Left Cheek	0mm	Chain 1	Full	0	2402	7.72	9.72	1.585	0.06	0.124	0.197
	Bluetooth	DH5 1Mbps	Left Cheek	0mm	Chain 1	Full	78	2480	6.84	8.84	1.585	0.04	0.120	0.190

17.2 Hotspot SAR

<GSM SAR>

Plot No.	Band	Mode	Test Position	Gap (mm)	Power Reduction	Ch.	Freq. (MHz)	Average Power (dBm)	Tune-Up Limit (dBm)	Tune-up Scaling Factor	Power Drift (dB)	Measured 1g SAR (W/kg)	Reported 1g SAR (W/kg)
	GSM850_UAT	GPRS(3 Tx slots)	Front	10mm	Reduced	128	824.2	27.71	28.80	1.285	-0.15	0.336	0.432
	GSM850_UAT	GPRS(3 Tx slots)	Back	10mm	Reduced	128	824.2	27.71	28.80	1.285	-0.07	0.388	0.499
	GSM850_UAT	GPRS(3 Tx slots)	Left Side	10mm	Reduced	128	824.2	27.71	28.80	1.285	-0.04	0.576	0.740
	GSM850_UAT	GPRS(3 Tx slots)	Right Side	10mm	Reduced	128	824.2	27.71	28.80	1.285	-0.03	0.012	0.015
	GSM850_UAT	GPRS(3 Tx slots)	Top Side	10mm	Reduced	128	824.2	27.71	28.80	1.285	-0.01	0.013	0.017
30	GSM850_UAT	GPRS(3 Tx slots)	Left Side	10mm	Reduced	189	836.4	27.62	28.80	1.312	0.11	0.649	0.852
	GSM850_UAT	GPRS(3 Tx slots)	Left Side	10mm	Reduced	251	848.8	27.27	28.80	1.422	0.01	0.559	0.795
	GSM850_LAT	GPRS(3 Tx slots)	Front	10mm	Full	128	824.2	28.68	29.80	1.294	0.1	0.241	0.312
	GSM850_LAT	GPRS(3 Tx slots)	Back	10mm	Full	128	824.2	28.68	29.80	1.294	0.17	0.326	0.422
	GSM850_LAT	GPRS(3 Tx slots)	Left Side	10mm	Full	128	824.2	28.68	29.80	1.294	0.06	0.017	0.022
	GSM850_LAT	GPRS(3 Tx slots)	Right Side	10mm	Full	128	824.2	28.68	29.80	1.294	-0.07	0.073	0.094
	GSM850_LAT	GPRS(3 Tx slots)	Bottom Side	10mm	Full	128	824.2	28.68	29.80	1.294	-0.02	0.182	0.236
	GSM850_LAT	GPRS(3 Tx slots)	Back	10mm	Full	189	836.4	28.62	29.80	1.312	-0.08	0.292	0.383
	GSM850_LAT	GPRS(3 Tx slots)	Back	10mm	Full	251	848.8	28.54	29.80	1.337	-0.06	0.285	0.381
	GSM1900_UAT	GPRS(3 Tx slots)	Front	10mm	Reduced	661	1880	20.21	20.70	1.119	-0.14	0.219	0.245
	GSM1900_UAT	GPRS(3 Tx slots)	Back	10mm	Reduced	661	1880	20.21	20.70	1.119	0.08	0.206	0.231
	GSM1900_UAT	GPRS(3 Tx slots)	Left Side	10mm	Reduced	661	1880	20.21	20.70	1.119	0.18	0.001	0.001
	GSM1900_UAT	GPRS(3 Tx slots)	Right Side	10mm	Reduced	661	1880	20.21	20.70	1.119	-0.13	0.001	0.001
	GSM1900_UAT	GPRS(3 Tx slots)	Top Side	10mm	Reduced	661	1880	20.21	20.70	1.119	-0.17	0.312	0.349
	GSM1900_UAT	GPRS(3 Tx slots)	Top Side	10mm	Reduced	512	1850.2	20.07	20.70	1.156	0.01	0.332	0.384
	GSM1900_UAT	GPRS(3 Tx slots)	Top Side	10mm	Reduced	810	1909.8	20.00	20.70	1.175	0.17	0.386	0.454
	GSM1900_LAT	GPRS(3 Tx slots)	Front	10mm	Reduced	661	1880	24.88	25.50	1.153	-0.13	0.337	0.389
	GSM1900_LAT	GPRS(3 Tx slots)	Back	10mm	Reduced	661	1880	24.88	25.50	1.153	-0.02	0.396	0.457
	GSM1900_LAT	GPRS(3 Tx slots)	Left Side	10mm	Reduced	661	1880	24.88	25.50	1.153	0.08	0.071	0.082
	GSM1900_LAT	GPRS(3 Tx slots)	Right Side	10mm	Reduced	661	1880	24.88	25.50	1.153	0.09	0.084	0.097
31	GSM1900_LAT	GPRS(3 Tx slots)	Bottom Side	10mm	Reduced	661	1880	24.88	25.50	1.153	0.06	0.554	0.639
	GSM1900_LAT	GPRS(3 Tx slots)	Bottom Side	10mm	Reduced	512	1850.2	24.74	25.50	1.191	-0.07	0.446	0.531
	GSM1900_LAT	GPRS(3 Tx slots)	Bottom Side	10mm	Reduced	810	1909.8	24.87	25.50	1.156	-0.09	0.538	0.622

<WCDMA SAR>

Plot No.	Band	Mode	Test Position	Gap (mm)	Power Reduction	Ch.	Freq. (MHz)	Average Power (dBm)	Tune-Up Limit (dBm)	Tune-up Scaling Factor	Power Drift (dB)	Measured 1g SAR (W/kg)	Reported 1g SAR (W/kg)
	WCDMA V_UAT	RMC 12.2Kbps	Front	10mm	Reduced	4182	836.4	22.89	23.80	1.233	-0.1	0.390	0.481
	WCDMA V_UAT	RMC 12.2Kbps	Back	10mm	Reduced	4182	836.4	22.89	23.80	1.233	0.09	0.471	0.581
32	WCDMA V_UAT	RMC 12.2Kbps	Left Side	10mm	Reduced	4182	836.4	22.89	23.80	1.233	0.11	0.699	0.862
	WCDMA V_UAT	RMC 12.2Kbps	Right Side	10mm	Reduced	4182	836.4	22.89	23.80	1.233	0.13	0.018	0.022
	WCDMA V_UAT	RMC 12.2Kbps	Top Side	10mm	Reduced	4182	836.4	22.89	23.80	1.233	-0.07	0.013	0.016
	WCDMA V_UAT	RMC 12.2Kbps	Left Side	10mm	Reduced	4132	826.4	22.87	23.80	1.239	0.08	0.677	0.839
	WCDMA V_UAT	RMC 12.2Kbps	Left Side	10mm	Reduced	4233	846.6	22.82	23.80	1.253	0.14	0.664	0.832
	WCDMA V_LAT	RMC 12.2Kbps	Front	10mm	Full	4182	836.4	24.12	24.80	1.169	-0.07	0.284	0.332
	WCDMA V_LAT	RMC 12.2Kbps	Back	10mm	Full	4182	836.4	24.12	24.80	1.169	-0.01	0.413	0.483
	WCDMA V_LAT	RMC 12.2Kbps	Left Side	10mm	Full	4182	836.4	24.12	24.80	1.169	0.16	0.203	0.237
	WCDMA V_LAT	RMC 12.2Kbps	Right Side	10mm	Full	4182	836.4	24.12	24.80	1.169	-0.15	0.219	0.256
	WCDMA V_LAT	RMC 12.2Kbps	Bottom Side	10mm	Full	4182	836.4	24.12	24.80	1.169	0.09	0.229	0.268
	WCDMA V_LAT	RMC 12.2Kbps	Back	10mm	Full	4132	826.4	24.09	24.80	1.178	-0.06	0.432	0.509
	WCDMA V_LAT	RMC 12.2Kbps	Back	10mm	Full	4233	846.6	24.10	24.80	1.175	0	0.391	0.459
	WCDMA IV_UAT	RMC 12.2Kbps	Front	10mm	Reduced	1413	1732.6	20.53	21.50	1.250	-0.11	0.429	0.536
	WCDMA IV_UAT	RMC 12.2Kbps	Back	10mm	Reduced	1413	1732.6	20.53	21.50	1.250	0.02	0.488	0.610
	WCDMA IV_UAT	RMC 12.2Kbps	Left Side	10mm	Reduced	1413	1732.6	20.53	21.50	1.250	0.08	0.166	0.208
	WCDMA IV_UAT	RMC 12.2Kbps	Right Side	10mm	Reduced	1413	1732.6	20.53	21.50	1.250	-0.06	0.001	0.001
	WCDMA IV_UAT	RMC 12.2Kbps	Top Side	10mm	Reduced	1413	1732.6	20.53	21.50	1.250	-0.02	0.625	0.781
	WCDMA IV_UAT	RMC 12.2Kbps	Top Side	10mm	Reduced	1312	1712.4	20.41	21.50	1.285	-0.11	0.548	0.704
	WCDMA IV_UAT	RMC 12.2Kbps	Top Side	10mm	Reduced	1513	1752.6	20.50	21.50	1.259	-0.08	0.654	0.823
	WCDMA IV_LAT	RMC 12.2Kbps	Front	10mm	Reduced	1413	1732.6	21.15	21.80	1.161	-0.11	0.497	0.577
	WCDMA IV_LAT	RMC 12.2Kbps	Back	10mm	Reduced	1413	1732.6	21.15	21.80	1.161	0.07	0.562	0.653
	WCDMA IV_LAT	RMC 12.2Kbps	Left Side	10mm	Reduced	1413	1732.6	21.15	21.80	1.161	-0.01	0.161	0.187
	WCDMA IV_LAT	RMC 12.2Kbps	Right Side	10mm	Reduced	1413	1732.6	21.15	21.80	1.161	-0.02	0.101	0.117
	WCDMA IV_LAT	RMC 12.2Kbps	Bottom Side	10mm	Reduced	1413	1732.6	21.15	21.80	1.161	-0.18	0.702	0.815
33	WCDMA IV_LAT	RMC 12.2Kbps	Bottom Side	10mm	Reduced	1312	1712.4	21.01	21.80	1.199	0.09	0.734	0.880
	WCDMA IV_LAT	RMC 12.2Kbps	Bottom Side	10mm	Reduced	1513	1752.6	21.13	21.80	1.167	-0.15	0.682	0.796
	WCDMA II_UAT	RMC 12.2Kbps	Front	10mm	Reduced	9400	1880	20.87	21.50	1.156	0.11	0.358	0.414
	WCDMA II_UAT	RMC 12.2Kbps	Back	10mm	Reduced	9400	1880	20.87	21.50	1.156	0.1	0.493	0.570
	WCDMA II_UAT	RMC 12.2Kbps	Left Side	10mm	Reduced	9400	1880	20.87	21.50	1.156	0.1	0.110	0.127
	WCDMA II_UAT	RMC 12.2Kbps	Right Side	10mm	Reduced	9400	1880	20.87	21.50	1.156	0.09	0.064	0.074
	WCDMA II_UAT	RMC 12.2Kbps	Top Side	10mm	Reduced	9400	1880	20.87	21.50	1.156	0.01	0.683	0.790
	WCDMA II_UAT	RMC 12.2Kbps	Top Side	10mm	Reduced	9262	1852.4	20.74	21.50	1.191	0.11	0.690	0.822
34	WCDMA II_UAT	RMC 12.2Kbps	Top Side	10mm	Reduced	9538	1907.6	20.79	21.50	1.178	0.18	0.716	0.843
	WCDMA II_LAT	RMC 12.2Kbps	Front	10mm	Reduced	9400	1880	19.62	20.30	1.169	0.19	0.310	0.363
	WCDMA II_LAT	RMC 12.2Kbps	Back	10mm	Reduced	9400	1880	19.62	20.30	1.169	-0.1	0.374	0.437
	WCDMA II_LAT	RMC 12.2Kbps	Left Side	10mm	Reduced	9400	1880	19.62	20.30	1.169	0.09	0.063	0.074
	WCDMA II_LAT	RMC 12.2Kbps	Right Side	10mm	Reduced	9400	1880	19.62	20.30	1.169	-0.03	0.090	0.105
	WCDMA II_LAT	RMC 12.2Kbps	Bottom Side	10mm	Reduced	9400	1880	19.62	20.30	1.169	0.03	0.480	0.561
	WCDMA II_LAT	RMC 12.2Kbps	Bottom Side	10mm	Reduced	9262	1852.4	19.51	20.30	1.199	0.05	0.478	0.573
	WCDMA II_LAT	RMC 12.2Kbps	Bottom Side	10mm	Reduced	9538	1907.6	19.59	20.30	1.178	-0.17	0.489	0.576

<CDMA SAR>

Plot No.	Band	Mode	Test Position	Gap (mm)	Power Reduction	Ch.	Freq. (MHz)	Average Power (dBm)	Tune-Up Limit (dBm)	Tune-up Scaling Factor	Power Drift (dB)	Measured 1g SAR (W/kg)	Reported 1g SAR (W/kg)
	CDMA2000 BC0_UAT	RTAP 153.6Kbps	Front	10mm	Reduced	384	836.52	22.68	23.80	1.294	-0.17	0.313	0.405
	CDMA2000 BC0_UAT	RTAP 153.6Kbps	Back	10mm	Reduced	384	836.52	22.68	23.80	1.294	0.05	0.339	0.439
	CDMA2000 BC0_UAT	RTAP 153.6Kbps	Left Side	10mm	Reduced	384	836.52	22.68	23.80	1.294	-0.16	0.448	0.580
	CDMA2000 BC0_UAT	RTAP 153.6Kbps	Right Side	10mm	Reduced	384	836.52	22.68	23.80	1.294	0.05	0.018	0.023
	CDMA2000 BC0_UAT	RTAP 153.6Kbps	Top Side	10mm	Reduced	384	836.52	22.68	23.80	1.294	0.13	0.014	0.018
	CDMA2000 BC0_UAT	RTAP 153.6Kbps	Left Side	10mm	Reduced	1013	824.7	22.59	23.80	1.321	0	0.475	0.628
35	CDMA2000 BC0_UAT	RTAP 153.6Kbps	Left Side	10mm	Reduced	777	848.31	22.58	23.80	1.324	-0.18	0.543	0.719
	CDMA2000 BC0_LAT	RTAP 153.6Kbps	Front	10mm	Full	384	836.52	23.89	24.80	1.233	-0.07	0.289	0.356
	CDMA2000 BC0_LAT	RTAP 153.6Kbps	Back	10mm	Full	384	836.52	23.89	24.80	1.233	0.12	0.365	0.450
	CDMA2000 BC0_LAT	RTAP 153.6Kbps	Left Side	10mm	Full	384	836.52	23.89	24.80	1.233	-0.1	0.155	0.191
	CDMA2000 BC0_LAT	RTAP 153.6Kbps	Right Side	10mm	Full	384	836.52	23.89	24.80	1.233	-0.06	0.212	0.261
	CDMA2000 BC0_LAT	RTAP 153.6Kbps	Bottom Side	10mm	Full	384	836.52	23.89	24.80	1.233	-0.04	0.205	0.253
	CDMA2000 BC0_LAT	RTAP 153.6Kbps	Back	10mm	Full	1013	824.7	23.85	24.80	1.245	-0.13	0.416	0.518
	CDMA2000 BC0_LAT	RTAP 153.6Kbps	Back	10mm	Full	777	848.31	23.84	24.80	1.247	-0.03	0.356	0.444
	CDMA2000 BC10_UAT	RTAP 153.6Kbps	Front	10mm	Reduced	580	820.5	22.59	23.80	1.321	0.09	0.330	0.436
	CDMA2000 BC10_UAT	RTAP 153.6Kbps	Back	10mm	Reduced	580	820.5	22.59	23.80	1.321	0.06	0.369	0.488
	CDMA2000 BC10_UAT	RTAP 153.6Kbps	Left Side	10mm	Reduced	580	820.5	22.59	23.80	1.321	0.06	0.543	0.717
	CDMA2000 BC10_UAT	RTAP 153.6Kbps	Right Side	10mm	Reduced	580	820.5	22.59	23.80	1.321	-0.01	0.020	0.026
	CDMA2000 BC10_UAT	RTAP 153.6Kbps	Top Side	10mm	Reduced	580	820.5	22.59	23.80	1.321	-0.02	0.014	0.019
36	CDMA2000 BC10_UAT	RTAP 153.6Kbps	Left Side	10mm	Reduced	476	817.9	22.56	23.80	1.330	-0.13	0.546	0.726
	CDMA2000 BC10_UAT	RTAP 153.6Kbps	Left Side	10mm	Reduced	684	823.1	22.54	23.80	1.337	-0.17	0.524	0.700
	CDMA2000 BC10_LAT	RTAP 153.6Kbps	Front	10mm	Full	580	820.5	24.00	24.80	1.202	0.11	0.283	0.340
	CDMA2000 BC10_LAT	RTAP 153.6Kbps	Back	10mm	Full	580	820.5	24.00	24.80	1.202	0.07	0.413	0.497
	CDMA2000 BC10_LAT	RTAP 153.6Kbps	Left Side	10mm	Full	580	820.5	24.00	24.80	1.202	-0.13	0.152	0.183
	CDMA2000 BC10_LAT	RTAP 153.6Kbps	Right Side	10mm	Full	580	820.5	24.00	24.80	1.202	-0.12	0.195	0.234
	CDMA2000 BC10_LAT	RTAP 153.6Kbps	Bottom Side	10mm	Full	580	820.5	24.00	24.80	1.202	0.16	0.185	0.222
	CDMA2000 BC10_LAT	RTAP 153.6Kbps	Back	10mm	Full	476	817.9	23.91	24.80	1.227	0.18	0.394	0.484
	CDMA2000 BC10_LAT	RTAP 153.6Kbps	Back	10mm	Full	684	823.1	23.97	24.80	1.211	0.05	0.412	0.499
	CDMA2000 BC1_UAT	RTAP 153.6Kbps	Front	10mm	Reduced	600	1880	16.96	18.00	1.271	-0.01	0.131	0.166
	CDMA2000 BC1_UAT	RTAP 153.6Kbps	Back	10mm	Reduced	600	1880	16.96	18.00	1.271	-0.09	0.147	0.187
	CDMA2000 BC1_UAT	RTAP 153.6Kbps	Left Side	10mm	Reduced	600	1880	16.96	18.00	1.271	-0.01	0.027	0.034
	CDMA2000 BC1_UAT	RTAP 153.6Kbps	Right Side	10mm	Reduced	600	1880	16.96	18.00	1.271	-0.02	0.019	0.024
	CDMA2000 BC1_UAT	RTAP 153.6Kbps	Top Side	10mm	Reduced	600	1880	16.96	18.00	1.271	-0.14	0.205	0.260
	CDMA2000 BC1_UAT	RTAP 153.6Kbps	Top Side	10mm	Reduced	25	1851.25	16.78	18.00	1.324	0.03	0.185	0.245
	CDMA2000 BC1_UAT	RTAP 153.6Kbps	Top Side	10mm	Reduced	1175	1908.75	16.82	18.00	1.312	0.05	0.234	0.307
	CDMA2000 BC1_LAT	RTAP 153.6Kbps	Front	10mm	Reduced	600	1880	20.11	21.30	1.315	-0.11	0.381	0.501
	CDMA2000 BC1_LAT	RTAP 153.6Kbps	Back	10mm	Reduced	600	1880	20.11	21.30	1.315	0.02	0.485	0.638
	CDMA2000 BC1_LAT	RTAP 153.6Kbps	Left Side	10mm	Reduced	600	1880	20.11	21.30	1.315	-0.09	0.076	0.100
	CDMA2000 BC1_LAT	RTAP 153.6Kbps	Right Side	10mm	Reduced	600	1880	20.11	21.30	1.315	0.19	0.103	0.135
	CDMA2000 BC1_LAT	RTAP 153.6Kbps	Bottom Side	10mm	Reduced	600	1880	20.11	21.30	1.315	0.11	0.581	0.764
	CDMA2000 BC1_LAT	RTAP 153.6Kbps	Bottom Side	10mm	Reduced	25	1851.25	19.90	21.30	1.380	0.16	0.553	0.763
37	CDMA2000 BC1_LAT	RTAP 153.6Kbps	Bottom Side	10mm	Reduced	1175	1908.75	19.96	21.30	1.361	0.09	0.600	0.817

<FDD LTE SAR>

Plot No.	Band	BW (MHz)	Modulation	RB Size	RB offset	Test Position	Gap (mm)	Power Reduction	Ch.	Freq. (MHz)	Average Power (dBm)	Tune-Up Limit (dBm)	Tune-up Scaling Factor	Power Drift (dB)	Measured 1g SAR (W/kg)	Reported 1g SAR (W/kg)
	LTE Band 71_UAT	20M	QPSK	1	0	Front	10mm	Full	133322	673	23.65	23.80	1.035	0.07	0.441	0.456
	LTE Band 71_UAT	20M	QPSK	1	0	Back	10mm	Full	133322	673	23.65	23.80	1.035	-0.02	0.517	0.535
38	LTE Band 71_UAT	20M	QPSK	1	0	Left Side	10mm	Full	133322	673	23.65	23.80	1.035	-0.04	0.633	0.655
	LTE Band 71_UAT	20M	QPSK	1	0	Right Side	10mm	Full	133322	673	23.65	23.80	1.035	-0.04	0.132	0.137
	LTE Band 71_UAT	20M	QPSK	1	0	Top Side	10mm	Full	133322	673	23.65	23.80	1.035	0.14	0.023	0.024
	LTE Band 71_UAT	20M	QPSK	50	24	Front	10mm	Full	133322	673	22.67	22.80	1.030	-0.12	0.367	0.378
	LTE Band 71_UAT	20M	QPSK	50	24	Back	10mm	Full	133322	673	22.67	22.80	1.030	0.11	0.405	0.417
	LTE Band 71_UAT	20M	QPSK	50	24	Left Side	10mm	Full	133322	673	22.67	22.80	1.030	0	0.630	0.649
	LTE Band 71_UAT	20M	QPSK	50	24	Right Side	10mm	Full	133322	673	22.67	22.80	1.030	0.1	0.079	0.081
	LTE Band 71_UAT	20M	QPSK	50	24	Top Side	10mm	Full	133322	673	22.67	22.80	1.030	-0.14	0.017	0.017
	LTE Band 71_LAT	20M	QPSK	1	0	Front	10mm	Full	133322	673	23.65	23.80	1.035	0.09	0.254	0.263
	LTE Band 71_LAT	20M	QPSK	1	0	Back	10mm	Full	133322	673	23.65	23.80	1.035	-0.08	0.385	0.399
	LTE Band 71_LAT	20M	QPSK	1	0	Left Side	10mm	Full	133322	673	23.65	23.80	1.035	0.16	0.207	0.214
	LTE Band 71_LAT	20M	QPSK	1	0	Right Side	10mm	Full	133322	673	23.65	23.80	1.035	-0.11	0.269	0.278
	LTE Band 71_LAT	20M	QPSK	1	0	Bottom Side	10mm	Full	133322	673	23.65	23.80	1.035	-0.05	0.149	0.154
	LTE Band 71_LAT	20M	QPSK	50	24	Front	10mm	Full	133322	673	22.69	22.80	1.026	0.05	0.213	0.218
	LTE Band 71_LAT	20M	QPSK	50	24	Back	10mm	Full	133322	673	22.69	22.80	1.026	0.19	0.332	0.341
	LTE Band 71_LAT	20M	QPSK	50	24	Left Side	10mm	Full	133322	673	22.69	22.80	1.026	0	0.178	0.183
	LTE Band 71_LAT	20M	QPSK	50	24	Right Side	10mm	Full	133322	673	22.69	22.80	1.026	-0.11	0.192	0.197
	LTE Band 71_LAT	20M	QPSK	50	24	Bottom Side	10mm	Full	133322	673	22.69	22.80	1.026	0.04	0.121	0.124
	LTE Band 12_UAT	10M	QPSK	1	25	Front	10mm	Full	23095	707.5	22.98	23.80	1.208	0.09	0.514	0.621
	LTE Band 12_UAT	10M	QPSK	1	25	Back	10mm	Full	23095	707.5	22.98	23.80	1.208	0.06	0.531	0.641
39	LTE Band 12_UAT	10M	QPSK	1	25	Left Side	10mm	Full	23095	707.5	22.98	23.80	1.208	0.17	0.737	0.890
	LTE Band 12_UAT	10M	QPSK	1	25	Right Side	10mm	Full	23095	707.5	22.98	23.80	1.208	-0.18	0.040	0.048
	LTE Band 12_UAT	10M	QPSK	1	25	Top Side	10mm	Full	23095	707.5	22.98	23.80	1.208	0.11	0.010	0.012
	LTE Band 12_UAT	10M	QPSK	25	12	Front	10mm	Full	23095	707.5	21.99	22.80	1.205	-0.15	0.408	0.492
	LTE Band 12_UAT	10M	QPSK	25	12	Back	10mm	Full	23095	707.5	21.99	22.80	1.205	0.1	0.445	0.536
	LTE Band 12_UAT	10M	QPSK	25	12	Left Side	10mm	Full	23095	707.5	21.99	22.80	1.205	-0.18	0.538	0.648
	LTE Band 12_UAT	10M	QPSK	25	12	Right Side	10mm	Full	23095	707.5	21.99	22.80	1.205	-0.07	0.033	0.040
	LTE Band 12_UAT	10M	QPSK	25	12	Top Side	10mm	Full	23095	707.5	21.99	22.80	1.205	-0.19	0.008	0.010
	LTE Band 12_UAT	10M	QPSK	50	0	Left Side	10mm	Full	23095	707.5	21.89	22.80	1.233	-0.05	0.588	0.725
	LTE Band 12_LAT	10M	QPSK	1	25	Front	10mm	Full	23095	707.5	22.94	23.80	1.219	0.03	0.243	0.296
	LTE Band 12_LAT	10M	QPSK	1	25	Back	10mm	Full	23095	707.5	22.94	23.80	1.219	0.03	0.462	0.563
	LTE Band 12_LAT	10M	QPSK	1	25	Left Side	10mm	Full	23095	707.5	22.94	23.80	1.219	0.11	0.226	0.275
	LTE Band 12_LAT	10M	QPSK	1	25	Right Side	10mm	Full	23095	707.5	22.94	23.80	1.219	0.14	0.190	0.232
	LTE Band 12_LAT	10M	QPSK	1	25	Bottom Side	10mm	Full	23095	707.5	22.94	23.80	1.219	0.06	0.154	0.188
	LTE Band 12_LAT	10M	QPSK	25	12	Front	10mm	Full	23095	707.5	22.10	22.80	1.175	0.1	0.251	0.295
	LTE Band 12_LAT	10M	QPSK	25	12	Back	10mm	Full	23095	707.5	22.10	22.80	1.175	-0.05	0.383	0.450
	LTE Band 12_LAT	10M	QPSK	25	12	Left Side	10mm	Full	23095	707.5	22.10	22.80	1.175	0.17	0.183	0.215
	LTE Band 12_LAT	10M	QPSK	25	12	Right Side	10mm	Full	23095	707.5	22.10	22.80	1.175	0.12	0.156	0.183
	LTE Band 12_LAT	10M	QPSK	25	12	Bottom Side	10mm	Full	23095	707.5	22.10	22.80	1.175	-0.15	0.124	0.146

Plot No.	Band	BW (MHz)	Modulation	RB Size	RB offset	Test Position	Gap (mm)	Power Reduction	Ch.	Freq. (MHz)	Average Power (dBm)	Tune-Up Limit (dBm)	Tune-up Scaling Factor	Power Drift (dB)	Measured 1g SAR (W/kg)	Reported 1g SAR (W/kg)
	LTE Band 13_UAT	10M	QPSK	1	0	Front	10mm	Reduced	23230	782	21.23	22.30	1.279	0.06	0.369	0.472
	LTE Band 13_UAT	10M	QPSK	1	0	Back	10mm	Reduced	23230	782	21.23	22.30	1.279	-0.07	0.396	0.507
	LTE Band 13_UAT	10M	QPSK	1	0	Left Side	10mm	Reduced	23230	782	21.23	22.30	1.279	0.05	0.582	0.745
	LTE Band 13_UAT	10M	QPSK	1	0	Right Side	10mm	Reduced	23230	782	21.23	22.30	1.279	0	0.024	0.031
	LTE Band 13_UAT	10M	QPSK	1	0	Top Side	10mm	Reduced	23230	782	21.23	22.30	1.279	-0.01	0.013	0.016
	LTE Band 13_UAT	10M	QPSK	25	12	Front	10mm	Reduced	23230	782	21.14	22.30	1.306	0.12	0.312	0.408
	LTE Band 13_UAT	10M	QPSK	25	12	Back	10mm	Reduced	23230	782	21.14	22.30	1.306	-0.18	0.397	0.519
40	LTE Band 13_UAT	10M	QPSK	25	12	Left Side	10mm	Reduced	23230	782	21.14	22.30	1.306	0.16	0.585	0.764
	LTE Band 13_UAT	10M	QPSK	25	12	Right Side	10mm	Reduced	23230	782	21.14	22.30	1.306	-0.16	0.023	0.030
	LTE Band 13_UAT	10M	QPSK	25	12	Top Side	10mm	Reduced	23230	782	21.14	22.30	1.306	-0.1	0.053	0.069
	LTE Band 13_LAT	10M	QPSK	1	0	Front	10mm	Full	23230	782	22.92	23.80	1.225	0.1	0.244	0.299
	LTE Band 13_LAT	10M	QPSK	1	0	Back	10mm	Full	23230	782	22.92	23.80	1.225	0.15	0.283	0.347
	LTE Band 13_LAT	10M	QPSK	1	0	Left Side	10mm	Full	23230	782	22.92	23.80	1.225	0.18	0.186	0.228
	LTE Band 13_LAT	10M	QPSK	1	0	Right Side	10mm	Full	23230	782	22.92	23.80	1.225	-0.16	0.160	0.196
	LTE Band 13_LAT	10M	QPSK	1	0	Bottom Side	10mm	Full	23230	782	22.92	23.80	1.225	0.06	0.143	0.175
	LTE Band 13_LAT	10M	QPSK	25	12	Front	10mm	Full	23230	782	22.03	22.80	1.194	0.14	0.203	0.242
	LTE Band 13_LAT	10M	QPSK	25	12	Back	10mm	Full	23230	782	22.03	22.80	1.194	-0.05	0.324	0.387
	LTE Band 13_LAT	10M	QPSK	25	12	Left Side	10mm	Full	23230	782	22.03	22.80	1.194	-0.1	0.166	0.198
	LTE Band 13_LAT	10M	QPSK	25	12	Right Side	10mm	Full	23230	782	22.03	22.80	1.194	0.11	0.131	0.156
	LTE Band 13_LAT	10M	QPSK	25	12	Bottom Side	10mm	Full	23230	782	22.03	22.80	1.194	-0.19	0.131	0.156
	LTE Band 5_UAT	10M	QPSK	1	49	Front	10mm	Reduced	20525	836.5	21.46	22.80	1.361	0.07	0.455	0.619
	LTE Band 5_UAT	10M	QPSK	1	49	Back	10mm	Reduced	20525	836.5	21.46	22.80	1.361	-0.18	0.453	0.617
	LTE Band 5_UAT	10M	QPSK	1	49	Left Side	10mm	Reduced	20525	836.5	21.46	22.80	1.361	-0.05	0.616	0.839
	LTE Band 5_UAT	10M	QPSK	1	49	Right Side	10mm	Reduced	20525	836.5	21.46	22.80	1.361	0.01	0.015	0.020
	LTE Band 5_UAT	10M	QPSK	1	49	Top Side	10mm	Reduced	20525	836.5	21.46	22.80	1.361	0.1	0.010	0.014
	LTE Band 5_UAT	10M	QPSK	25	12	Front	10mm	Reduced	20525	836.5	21.39	22.80	1.384	0.18	0.373	0.516
	LTE Band 5_UAT	10M	QPSK	25	12	Back	10mm	Reduced	20525	836.5	21.39	22.80	1.384	-0.17	0.376	0.520
	LTE Band 5_UAT	10M	QPSK	25	12	Left Side	10mm	Reduced	20525	836.5	21.39	22.80	1.384	-0.18	0.586	0.811
	LTE Band 5_UAT	10M	QPSK	25	12	Right Side	10mm	Reduced	20525	836.5	21.39	22.80	1.384	0.1	0.013	0.018
	LTE Band 5_UAT	10M	QPSK	25	12	Top Side	10mm	Reduced	20525	836.5	21.39	22.80	1.384	0.06	0.008	0.010
41	LTE Band 5_UAT	10M	QPSK	50	0	Left Side	10mm	Reduced	20525	836.5	21.09	22.80	1.483	0.18	0.595	0.882
	LTE Band 5_LAT	10M	QPSK	1	49	Front	10mm	Full	20525	836.5	22.84	23.80	1.247	-0.17	0.268	0.334
	LTE Band 5_LAT	10M	QPSK	1	49	Back	10mm	Full	20525	836.5	22.84	23.80	1.247	-0.01	0.332	0.414
	LTE Band 5_LAT	10M	QPSK	1	49	Left Side	10mm	Full	20525	836.5	22.84	23.80	1.247	0	0.138	0.172
	LTE Band 5_LAT	10M	QPSK	1	49	Right Side	10mm	Full	20525	836.5	22.84	23.80	1.247	0.04	0.168	0.210
	LTE Band 5_LAT	10M	QPSK	1	49	Bottom Side	10mm	Full	20525	836.5	22.84	23.80	1.247	0.08	0.208	0.259
	LTE Band 5_LAT	10M	QPSK	25	12	Front	10mm	Full	20525	836.5	21.91	22.80	1.227	-0.03	0.221	0.271
	LTE Band 5_LAT	10M	QPSK	25	12	Back	10mm	Full	20525	836.5	21.91	22.80	1.227	-0.16	0.280	0.344
	LTE Band 5_LAT	10M	QPSK	25	12	Left Side	10mm	Full	20525	836.5	21.91	22.80	1.227	0.06	0.109	0.134
	LTE Band 5_LAT	10M	QPSK	25	12	Right Side	10mm	Full	20525	836.5	21.91	22.80	1.227	-0.18	0.140	0.172
	LTE Band 5_LAT	10M	QPSK	25	12	Bottom Side	10mm	Full	20525	836.5	21.91	22.80	1.227	0.12	0.163	0.200

Plot No.	Band	BW (MHz)	Modulation	RB Size	RB offset	Test Position	Gap (mm)	Power Reduction	Ch.	Freq. (MHz)	Average Power (dBm)	Tune-Up Limit (dBm)	Tune-up Scaling Factor	Power Drift (dB)	Measured 1g SAR (W/kg)	Reported 1g SAR (W/kg)
	LTE Band 26_UAT	15M	QPSK	1	0	Front	10mm	Reduced	26865	831.5	21.30	22.30	1.259	-0.1	0.336	0.423
	LTE Band 26_UAT	15M	QPSK	1	0	Back	10mm	Reduced	26865	831.5	21.30	22.30	1.259	-0.14	0.340	0.428
	LTE Band 26_UAT	15M	QPSK	1	0	Left Side	10mm	Reduced	26865	831.5	21.30	22.30	1.259	0.05	0.548	0.690
	LTE Band 26_UAT	15M	QPSK	1	0	Right Side	10mm	Reduced	26865	831.5	21.30	22.30	1.259	0.16	0.014	0.017
	LTE Band 26_UAT	15M	QPSK	1	0	Top Side	10mm	Reduced	26865	831.5	21.30	22.30	1.259	-0.13	0.006	0.008
	LTE Band 26_UAT	15M	QPSK	36	20	Front	10mm	Reduced	26865	831.5	21.27	22.30	1.268	0.12	0.368	0.466
	LTE Band 26_UAT	15M	QPSK	36	20	Back	10mm	Reduced	26865	831.5	21.27	22.30	1.268	-0.14	0.395	0.501
	LTE Band 26_UAT	15M	QPSK	36	20	Left Side	10mm	Reduced	26865	831.5	21.27	22.30	1.268	0.18	0.572	0.725
	LTE Band 26_UAT	15M	QPSK	36	20	Right Side	10mm	Reduced	26865	831.5	21.27	22.30	1.268	-0.07	0.016	0.020
	LTE Band 26_UAT	15M	QPSK	36	20	Top Side	10mm	Reduced	26865	831.5	21.27	22.30	1.268	-0.19	0.007	0.009
	LTE Band 26_UAT	15M	QPSK	36	20	Left Side	10mm	Reduced	26765	821.5	21.26	22.30	1.271	-0.04	0.518	0.658
42	LTE Band 26_UAT	15M	QPSK	36	20	Left Side	10mm	Reduced	26965	841.5	21.21	22.30	1.285	-0.15	0.652	0.838
	LTE Band 26_UAT	15M	QPSK	75	0	Left Side	10mm	Reduced	26865	831.5	21.22	22.30	1.282	-0.1	0.435	0.558
	LTE Band 26_UAT	15M	QPSK	75	0	Left Side	10mm	Reduced	26765	821.5	21.18	22.30	1.294	-0.06	0.540	0.699
	LTE Band 26_UAT	15M	QPSK	75	0	Left Side	10mm	Reduced	26965	841.5	21.14	22.30	1.306	-0.07	0.574	0.750
	LTE Band 26_LAT	15M	QPSK	1	0	Front	10mm	Full	26865	831.5	22.99	23.80	1.205	0.15	0.317	0.382
	LTE Band 26_LAT	15M	QPSK	1	0	Back	10mm	Full	26865	831.5	22.99	23.80	1.205	0.03	0.428	0.516
	LTE Band 26_LAT	15M	QPSK	1	0	Left Side	10mm	Full	26865	831.5	22.99	23.80	1.205	0.02	0.154	0.186
	LTE Band 26_LAT	15M	QPSK	1	0	Right Side	10mm	Full	26865	831.5	22.99	23.80	1.205	0.15	0.183	0.221
	LTE Band 26_LAT	15M	QPSK	1	0	Bottom Side	10mm	Full	26865	831.5	22.99	23.80	1.205	0	0.163	0.196
	LTE Band 26_LAT	15M	QPSK	1	0	Back	10mm	Full	26765	821.5	22.96	23.80	1.213	-0.04	0.442	0.536
	LTE Band 26_LAT	15M	QPSK	1	0	Back	10mm	Full	26965	841.5	22.95	23.80	1.216	0.11	0.397	0.483
	LTE Band 26_LAT	15M	QPSK	36	20	Front	10mm	Full	26865	831.5	22.07	22.80	1.183	0.11	0.256	0.303
	LTE Band 26_LAT	15M	QPSK	36	20	Back	10mm	Full	26865	831.5	22.07	22.80	1.183	0.06	0.302	0.357
	LTE Band 26_LAT	15M	QPSK	36	20	Left Side	10mm	Full	26865	831.5	22.07	22.80	1.183	-0.03	0.121	0.143
	LTE Band 26_LAT	15M	QPSK	36	20	Right Side	10mm	Full	26865	831.5	22.07	22.80	1.183	0.14	0.138	0.163
	LTE Band 26_LAT	15M	QPSK	36	20	Bottom Side	10mm	Full	26865	831.5	22.07	22.80	1.183	-0.17	0.130	0.154
	LTE Band 66_UAT	20M	QPSK	1	0	Front	10mm	Full	132322	1745	20.75	22.00	1.334	-0.08	0.386	0.515
	LTE Band 66_UAT	20M	QPSK	1	0	Back	10mm	Full	132322	1745	20.75	22.00	1.334	-0.11	0.416	0.555
	LTE Band 66_UAT	20M	QPSK	1	0	Left Side	10mm	Full	132322	1745	20.75	22.00	1.334	-0.09	0.122	0.163
	LTE Band 66_UAT	20M	QPSK	1	0	Right Side	10mm	Full	132322	1745	20.75	22.00	1.334	0.18	0.001	0.001
	LTE Band 66_UAT	20M	QPSK	1	0	Top Side	10mm	Full	132322	1745	20.75	22.00	1.334	-0.05	0.605	0.807
	LTE Band 66_UAT	20M	QPSK	1	0	Top Side	10mm	Full	132072	1720	20.61	22.00	1.377	0.07	0.492	0.678
43	LTE Band 66_UAT	20M	QPSK	1	0	Top Side	10mm	Full	132572	1770	20.73	22.00	1.340	0.09	0.685	0.918
	LTE Band 66_UAT	20M	QPSK	50	24	Front	10mm	Full	132322	1745	19.84	21.00	1.306	0.18	0.328	0.428
	LTE Band 66_UAT	20M	QPSK	50	24	Back	10mm	Full	132322	1745	19.84	21.00	1.306	-0.09	0.365	0.477
	LTE Band 66_UAT	20M	QPSK	50	24	Left Side	10mm	Full	132322	1745	19.84	21.00	1.306	-0.16	0.100	0.131
	LTE Band 66_UAT	20M	QPSK	50	24	Right Side	10mm	Full	132322	1745	19.84	21.00	1.306	-0.1	0.001	0.001
	LTE Band 66_UAT	20M	QPSK	50	24	Top Side	10mm	Full	132322	1745	19.84	21.00	1.306	-0.11	0.532	0.695
	LTE Band 66_UAT	20M	QPSK	100	0	Top Side	10mm	Full	132322	1745	19.86	21.00	1.300	-0.15	0.476	0.619
	LTE Band 66_UAT	20M	QPSK	100	0	Top Side	10mm	Full	132072	1720	19.55	21.00	1.396	0.05	0.397	0.554
	LTE Band 66_UAT	20M	QPSK	100	0	Top Side	10mm	Full	132572	1770	19.84	21.00	1.306	0.1	0.505	0.660
	LTE Band 66C_UAT	20M	QPSK	1	0	Top Side	10mm	Full	132572	1770	20.97	22.00	1.268	0.06	0.630	0.799
	LTE Band 66_LAT	20M	QPSK	1	0	Front	10mm	Reduced	132322	1745	19.88	20.80	1.236	0.09	0.355	0.439
	LTE Band 66_LAT	20M	QPSK	1	0	Back	10mm	Reduced	132322	1745	19.88	20.80	1.236	0	0.525	0.649
	LTE Band 66_LAT	20M	QPSK	1	0	Left Side	10mm	Reduced	132322	1745	19.88	20.80	1.236	-0.14	0.126	0.156
	LTE Band 66_LAT	20M	QPSK	1	0	Right Side	10mm	Reduced	132322	1745	19.88	20.80	1.236	-0.16	0.078	0.096
	LTE Band 66_LAT	20M	QPSK	1	0	Bottom Side	10mm	Reduced	132322	1745	19.88	20.80	1.236	0.15	0.654	0.808
	LTE Band 66_LAT	20M	QPSK	50	24	Front	10mm	Reduced	132322	1745	19.86	20.80	1.242	-0.04	0.373	0.463
	LTE Band 66_LAT	20M	QPSK	50	24	Back	10mm	Reduced	132322	1745	19.86	20.80	1.242	0.07	0.573	0.711
	LTE Band 66_LAT	20M	QPSK	50	24	Left Side	10mm	Reduced	132322	1745	19.86	20.80	1.242	-0.19	0.138	0.171
	LTE Band 66_LAT	20M	QPSK	50	24	Right Side	10mm	Reduced	132322	1745	19.86	20.80	1.242	-0.04	0.079	0.098
	LTE Band 66_LAT	20M	QPSK	50	24	Bottom Side	10mm	Reduced	132322	1745	19.86	20.80	1.242	0.09	0.704	0.874
	LTE Band 66_LAT	20M	QPSK	50	24	Bottom Side	10mm	Reduced	132072	1720	19.85	20.80	1.245	0.13	0.630	0.784
	LTE Band 66_LAT	20M	QPSK	50	24	Bottom Side	10mm	Reduced	132572	1770	19.79	20.80	1.262	-0.17	0.617	0.779
	LTE Band 66_LAT	20M	QPSK	100	0	Bottom Side	10mm	Reduced	132322	1745	19.83	20.80	1.250	0.1	0.688	0.860
	LTE Band 66_LAT	20M	QPSK	100	0	Bottom Side	10mm	Reduced	132072	1720	19.82	20.80	1.253	0.18	0.636	0.797
	LTE Band 66_LAT	20M	QPSK	100	0	Bottom Side	10mm	Reduced	132572	1770	19.80	20.80	1.259	0.03	0.629	0.792
	LTE Band 66C_LAT	20M	QPSK	1	0	Bottom Side	10mm	Reduced	132572	1770	19.75	20.80	1.274	0.11	0.619	0.788

Plot No.	Band	BW (MHz)	Modulation	RB Size	RB offset	Test Position	Gap (mm)	Power Reduction	Ch.	Freq. (MHz)	Average Power (dBm)	Tune-Up Limit (dBm)	Tune-up Scaling Factor	Power Drift (dB)	Measured 1g SAR (W/kg)	Reported 1g SAR (W/kg)
	LTE Band 25_UAT	20M	QPSK	1	0	Front	10mm	Reduced	26340	1880	15.90	16.50	1.148	0.09	0.331	0.380
	LTE Band 25_UAT	20M	QPSK	1	0	Back	10mm	Reduced	26340	1880	15.90	16.50	1.148	0.1	0.333	0.382
	LTE Band 25_UAT	20M	QPSK	1	0	Left Side	10mm	Reduced	26340	1880	15.90	16.50	1.148	-0.04	0.079	0.091
	LTE Band 25_UAT	20M	QPSK	1	0	Right Side	10mm	Reduced	26340	1880	15.90	16.50	1.148	-0.05	0.001	0.001
	LTE Band 25_UAT	20M	QPSK	1	0	Top Side	10mm	Reduced	26340	1880	15.90	16.50	1.148	0.04	0.491	0.564
	LTE Band 25_UAT	20M	QPSK	50	24	Front	10mm	Reduced	26340	1880	15.89	16.50	1.151	-0.11	0.337	0.388
	LTE Band 25_UAT	20M	QPSK	50	24	Back	10mm	Reduced	26340	1880	15.89	16.50	1.151	0.1	0.405	0.466
	LTE Band 25_UAT	20M	QPSK	50	24	Left Side	10mm	Reduced	26340	1880	15.89	16.50	1.151	-0.06	0.083	0.096
	LTE Band 25_UAT	20M	QPSK	50	24	Right Side	10mm	Reduced	26340	1880	15.89	16.50	1.151	-0.13	0.001	0.001
	LTE Band 25_UAT	20M	QPSK	50	24	Top Side	10mm	Reduced	26340	1880	15.89	16.50	1.151	0.19	0.545	0.627
	LTE Band 25_UAT	20M	QPSK	50	24	Top Side	10mm	Reduced	26140	1860	15.88	16.50	1.153	-0.15	0.539	0.622
44	LTE Band 25_UAT	20M	QPSK	50	24	Top Side	10mm	Reduced	26590	1905	15.84	16.50	1.164	0.16	0.561	0.653
	LTE Band 25_LAT	20M	QPSK	1	0	Front	10mm	Reduced	26340	1880	17.64	18.30	1.164	0.04	0.265	0.308
	LTE Band 25_LAT	20M	QPSK	1	0	Back	10mm	Reduced	26340	1880	17.64	18.30	1.164	0.07	0.326	0.380
	LTE Band 25_LAT	20M	QPSK	1	0	Left Side	10mm	Reduced	26340	1880	17.64	18.30	1.164	-0.09	0.046	0.054
	LTE Band 25_LAT	20M	QPSK	1	0	Right Side	10mm	Reduced	26340	1880	17.64	18.30	1.164	-0.12	0.068	0.079
	LTE Band 25_LAT	20M	QPSK	1	0	Bottom Side	10mm	Reduced	26340	1880	17.64	18.30	1.164	0.1	0.443	0.516
	LTE Band 25_LAT	20M	QPSK	50	24	Front	10mm	Reduced	26340	1880	17.61	18.30	1.172	0.08	0.270	0.316
	LTE Band 25_LAT	20M	QPSK	50	24	Back	10mm	Reduced	26340	1880	17.61	18.30	1.172	-0.12	0.401	0.470
	LTE Band 25_LAT	20M	QPSK	50	24	Left Side	10mm	Reduced	26340	1880	17.61	18.30	1.172	0.16	0.042	0.049
	LTE Band 25_LAT	20M	QPSK	50	24	Right Side	10mm	Reduced	26340	1880	17.61	18.30	1.172	0.18	0.067	0.079
	LTE Band 25_LAT	20M	QPSK	50	24	Bottom Side	10mm	Reduced	26340	1880	17.61	18.30	1.172	0.1	0.441	0.517
	LTE Band 25_LAT	20M	QPSK	50	24	Bottom Side	10mm	Reduced	26140	1860	17.53	18.30	1.194	0.05	0.412	0.492
	LTE Band 25_LAT	20M	QPSK	50	24	Bottom Side	10mm	Reduced	26590	1905	17.54	18.30	1.191	0.12	0.404	0.481
	LTE Band 30_UAT	10M	QPSK	1	0	Front	10mm	Reduced	27710	2310	15.66	16.30	1.159	0.09	0.409	0.474
	LTE Band 30_UAT	10M	QPSK	1	0	Back	10mm	Reduced	27710	2310	15.66	16.30	1.159	-0.06	0.483	0.560
	LTE Band 30_UAT	10M	QPSK	1	0	Left Side	10mm	Reduced	27710	2310	15.66	16.30	1.159	0.11	0.099	0.115
	LTE Band 30_UAT	10M	QPSK	1	0	Right Side	10mm	Reduced	27710	2310	15.66	16.30	1.159	-0.16	0.001	0.001
45	LTE Band 30_UAT	10M	QPSK	1	0	Top Side	10mm	Reduced	27710	2310	15.66	16.30	1.159	0.06	0.793	0.919
	LTE Band 30_UAT	10M	QPSK	25	12	Front	10mm	Reduced	27710	2310	15.65	16.30	1.161	-0.19	0.401	0.466
	LTE Band 30_UAT	10M	QPSK	25	12	Back	10mm	Reduced	27710	2310	15.65	16.30	1.161	-0.15	0.472	0.548
	LTE Band 30_UAT	10M	QPSK	25	12	Left Side	10mm	Reduced	27710	2310	15.65	16.30	1.161	-0.03	0.091	0.106
	LTE Band 30_UAT	10M	QPSK	25	12	Right Side	10mm	Reduced	27710	2310	15.65	16.30	1.161	0.11	0.001	0.001
	LTE Band 30_UAT	10M	QPSK	25	12	Top Side	10mm	Reduced	27710	2310	15.65	16.30	1.161	0.03	0.790	0.918
	LTE Band 30_UAT	10M	QPSK	50	0	Top Side	10mm	Reduced	27710	2310	15.60	16.30	1.175	0.07	0.778	0.914
	LTE Band 30_LAT	10M	QPSK	1	0	Front	10mm	Reduced	27710	2310	18.42	19.30	1.225	0.08	0.299	0.366
	LTE Band 30_LAT	10M	QPSK	1	0	Back	10mm	Reduced	27710	2310	18.42	19.30	1.225	0.17	0.326	0.399
	LTE Band 30_LAT	10M	QPSK	1	0	Left Side	10mm	Reduced	27710	2310	18.42	19.30	1.225	-0.06	0.095	0.116
	LTE Band 30_LAT	10M	QPSK	1	0	Right Side	10mm	Reduced	27710	2310	18.42	19.30	1.225	-0.16	0.053	0.065
	LTE Band 30_LAT	10M	QPSK	1	0	Bottom Side	10mm	Reduced	27710	2310	18.42	19.30	1.225	-0.11	0.285	0.349
	LTE Band 30_LAT	10M	QPSK	25	12	Front	10mm	Reduced	27710	2310	18.41	19.30	1.227	0.07	0.303	0.372
	LTE Band 30_LAT	10M	QPSK	25	12	Back	10mm	Reduced	27710	2310	18.41	19.30	1.227	0.11	0.450	0.552
	LTE Band 30_LAT	10M	QPSK	25	12	Left Side	10mm	Reduced	27710	2310	18.41	19.30	1.227	0.07	0.098	0.120
	LTE Band 30_LAT	10M	QPSK	25	12	Right Side	10mm	Reduced	27710	2310	18.41	19.30	1.227	-0.1	0.063	0.077
	LTE Band 30_LAT	10M	QPSK	25	12	Bottom Side	10mm	Reduced	27710	2310	18.41	19.30	1.227	0.05	0.284	0.349

Plot No.	Band	BW (MHz)	Modulation	RB Size	RB offset	Test Position	Gap (mm)	Power Reduction	Ch.	Freq. (MHz)	Average Power (dBm)	Tune-Up Limit (dBm)	Tune-up Scaling Factor	Power Drift (dB)	Measured 1g SAR (W/kg)	Reported 1g SAR (W/kg)
	LTE Band 7_UAT	20M	QPSK	1	0	Front	10mm	Reduced	20850	2510	14.23	14.80	1.140	0.09	0.366	0.417
	LTE Band 7_UAT	20M	QPSK	1	0	Back	10mm	Reduced	20850	2510	14.23	14.80	1.140	-0.07	0.389	0.444
	LTE Band 7_UAT	20M	QPSK	1	0	Left Side	10mm	Reduced	20850	2510	14.23	14.80	1.140	0.03	0.001	0.001
	LTE Band 7_UAT	20M	QPSK	1	0	Right Side	10mm	Reduced	20850	2510	14.23	14.80	1.140	-0.18	0.001	0.001
	LTE Band 7_UAT	20M	QPSK	1	0	Top Side	10mm	Reduced	20850	2510	14.23	14.80	1.140	-0.03	0.765	0.872
	LTE Band 7_UAT	20M	QPSK	1	0	Top Side	10mm	Reduced	21100	2535	14.18	14.80	1.153	-0.06	0.589	0.679
	LTE Band 7_UAT	20M	QPSK	1	0	Top Side	10mm	Reduced	21350	2560	14.21	14.80	1.146	0	0.554	0.635
	LTE Band 7_UAT	20M	QPSK	50	24	Front	10mm	Reduced	20850	2510	14.21	14.80	1.146	-0.11	0.201	0.230
	LTE Band 7_UAT	20M	QPSK	50	24	Back	10mm	Reduced	20850	2510	14.21	14.80	1.146	0.02	0.228	0.261
	LTE Band 7_UAT	20M	QPSK	50	24	Left Side	10mm	Reduced	20850	2510	14.21	14.80	1.146	0.08	0.001	0.001
	LTE Band 7_UAT	20M	QPSK	50	24	Right Side	10mm	Reduced	20850	2510	14.21	14.80	1.146	-0.06	0.001	0.001
	LTE Band 7_UAT	20M	QPSK	50	24	Top Side	10mm	Reduced	20850	2510	14.21	14.80	1.146	-0.02	0.551	0.631
	LTE Band 7_UAT	20M	QPSK	100	0	Top Side	10mm	Reduced	20850	2510	14.20	14.80	1.148	-0.08	0.640	0.735
46	LTE Band 7_UAT	20M	QPSK	100	0	Top Side	10mm	Reduced	20850	2510	14.20	14.80	1.148	0.14	0.800	0.919
	LTE Band 7_UAT	20M	QPSK	100	0	Top Side	10mm	Reduced	21100	2535	14.15	14.80	1.161	-0.11	0.479	0.556
	LTE Band 7_UAT	20M	QPSK	100	0	Top Side	10mm	Reduced	21350	2560	14.11	14.80	1.172	0.07	0.490	0.574
	LTE Band 7_LAT	20M	QPSK	1	0	Front	10mm	Reduced	20850	2510	17.92	18.30	1.091	0.11	0.249	0.272
	LTE Band 7_LAT	20M	QPSK	1	0	Back	10mm	Reduced	20850	2510	17.92	18.30	1.091	0.1	0.345	0.377
	LTE Band 7_LAT	20M	QPSK	1	0	Left Side	10mm	Reduced	20850	2510	17.92	18.30	1.091	0.1	0.090	0.098
	LTE Band 7_LAT	20M	QPSK	1	0	Right Side	10mm	Reduced	20850	2510	17.92	18.30	1.091	-0.13	0.067	0.073
	LTE Band 7_LAT	20M	QPSK	1	0	Bottom Side	10mm	Reduced	20850	2510	17.92	18.30	1.091	-0.14	0.305	0.333
	LTE Band 7_LAT	20M	QPSK	50	24	Front	10mm	Reduced	20850	2510	17.90	18.30	1.096	0.02	0.254	0.279
	LTE Band 7_LAT	20M	QPSK	50	24	Back	10mm	Reduced	20850	2510	17.90	18.30	1.096	0.06	0.503	0.552
	LTE Band 7_LAT	20M	QPSK	50	24	Left Side	10mm	Reduced	20850	2510	17.90	18.30	1.096	0.17	0.094	0.103
	LTE Band 7_LAT	20M	QPSK	50	24	Right Side	10mm	Reduced	20850	2510	17.90	18.30	1.096	0.08	0.067	0.073
	LTE Band 7_LAT	20M	QPSK	50	24	Bottom Side	10mm	Reduced	20850	2510	17.90	18.30	1.096	-0.07	0.310	0.340
	LTE Band 7_LAT	20M	QPSK	50	24	Back	10mm	Reduced	21100	2535	17.85	18.30	1.109	0.1	0.337	0.374
	LTE Band 7_LAT	20M	QPSK	50	24	Back	10mm	Reduced	21350	2560	17.89	18.30	1.099	0.15	0.330	0.363

<TDD LTE SAR>

Plot No.	Band	BW (MHz)	Modulation	RB Size	RB offset	Test Position	Gap (mm)	Power Reduction	Ch.	Freq. (MHz)	Average Power (dBm)	Tune-Up Limit (dBm)	Tune-up Scaling Factor	Duty Cycle %	Duty Cycle Scaling Factor	Power Drift (dB)	Measured 1g SAR (W/kg)	Reported 1g SAR (W/kg)
	LTE Band 41_UAT	20M	QPSK	1	49	Front	10mm	Reduced	40620	2593	17.47	17.80	1.079	62.9	1.006	-0.1	0.145	0.157
	LTE Band 41_UAT	20M	QPSK	1	49	Back	10mm	Reduced	40620	2593	17.47	17.80	1.079	62.9	1.006	0.09	0.183	0.199
	LTE Band 41_UAT	20M	QPSK	1	49	Left Side	10mm	Reduced	40620	2593	17.47	17.80	1.079	62.9	1.006	-0.14	0.001	0.001
	LTE Band 41_UAT	20M	QPSK	1	49	Right Side	10mm	Reduced	40620	2593	17.47	17.80	1.079	62.9	1.006	0.19	0.001	0.001
	LTE Band 41_UAT	20M	QPSK	1	49	Top Side	10mm	Reduced	40620	2593	17.47	17.80	1.079	62.9	1.006	-0.11	0.469	0.509
	LTE Band 41_UAT	20M	QPSK	50	24	Front	10mm	Reduced	40620	2593	17.46	17.80	1.081	62.9	1.006	-0.12	0.149	0.162
	LTE Band 41_UAT	20M	QPSK	50	24	Back	10mm	Reduced	40620	2593	17.46	17.80	1.081	62.9	1.006	0.06	0.250	0.272
	LTE Band 41_UAT	20M	QPSK	50	24	Left Side	10mm	Reduced	40620	2593	17.46	17.80	1.081	62.9	1.006	0.08	0.001	0.001
	LTE Band 41_UAT	20M	QPSK	50	24	Right Side	10mm	Reduced	40620	2593	17.46	17.80	1.081	62.9	1.006	0.03	0.001	0.001
	LTE Band 41_UAT	20M	QPSK	50	24	Top Side	10mm	Reduced	40620	2593	17.46	17.80	1.081	62.9	1.006	-0.16	0.480	0.522
	LTE Band 41_UAT	20M	QPSK	50	24	Top Side	10mm	Reduced	39750	2506	17.45	17.80	1.084	62.9	1.006	0.15	0.726	0.792
	LTE Band 41_UAT	20M	QPSK	50	24	Top Side	10mm	Reduced	40185	2549.5	17.44	17.80	1.086	62.9	1.006	0.01	0.490	0.536
	LTE Band 41_UAT	20M	QPSK	50	24	Top Side	10mm	Reduced	41055	2636.5	17.33	17.80	1.114	62.9	1.006	-0.13	0.355	0.398
	LTE Band 41_UAT	20M	QPSK	50	24	Top Side	10mm	Reduced	41490	2680	17.31	17.80	1.119	62.9	1.006	0.05	0.365	0.411
	LTE Band 41_UAT	20M	QPSK	100	0	Top Side	10mm	Reduced	40620	2593	17.45	17.80	1.084	62.9	1.006	-0.02	0.469	0.511
	LTE Band 41_UAT	20M	QPSK	100	0	Top Side	10mm	Reduced	39750	2506	17.42	17.80	1.091	62.9	1.006	0.09	0.640	0.703
	LTE Band 41_UAT	20M	QPSK	100	0	Top Side	10mm	Reduced	40185	2549.5	17.33	17.80	1.114	62.9	1.006	0	0.479	0.537
	LTE Band 41_UAT	20M	QPSK	100	0	Top Side	10mm	Reduced	41055	2636.5	17.33	17.80	1.114	62.9	1.006	-0.11	0.346	0.388
	LTE Band 41_UAT	20M	QPSK	100	0	Top Side	10mm	Reduced	41490	2680	17.18	17.80	1.153	62.9	1.006	0.16	0.249	0.289
	LTE Band 41C_UAT	20M	QPSK	1	0	Top Side	10mm	Reduced	40620	2593	17.78	17.80	1.005	62.9	1.006	0.06	0.688	0.695
	LTE Band 41_LAT	20M	QPSK	1	49	Front	10mm	Reduced	40620	2593	20.41	20.80	1.094	62.9	1.006	-0.06	0.254	0.280
	LTE Band 41_LAT	20M	QPSK	1	49	Back	10mm	Reduced	40620	2593	20.41	20.80	1.094	62.9	1.006	-0.02	0.332	0.365
	LTE Band 41_LAT	20M	QPSK	1	49	Left Side	10mm	Reduced	40620	2593	20.41	20.80	1.094	62.9	1.006	-0.15	0.081	0.089
	LTE Band 41_LAT	20M	QPSK	1	49	Right Side	10mm	Reduced	40620	2593	20.41	20.80	1.094	62.9	1.006	-0.13	0.077	0.085
	LTE Band 41_LAT	20M	QPSK	1	49	Bottom Side	10mm	Reduced	40620	2593	20.41	20.80	1.094	62.9	1.006	0.06	0.272	0.299
	LTE Band 41_LAT	20M	QPSK	50	24	Front	10mm	Reduced	40620	2593	20.39	20.80	1.099	62.9	1.006	0.06	0.254	0.281
	LTE Band 41_LAT	20M	QPSK	50	24	Back	10mm	Reduced	40620	2593	20.39	20.80	1.099	62.9	1.006	0.03	0.336	0.371
	LTE Band 41_LAT	20M	QPSK	50	24	Left Side	10mm	Reduced	40620	2593	20.39	20.80	1.099	62.9	1.006	0	0.078	0.086
	LTE Band 41_LAT	20M	QPSK	50	24	Right Side	10mm	Reduced	40620	2593	20.39	20.80	1.099	62.9	1.006	-0.04	0.075	0.083
	LTE Band 41_LAT	20M	QPSK	50	24	Bottom Side	10mm	Reduced	40620	2593	20.39	20.80	1.099	62.9	1.006	0.02	0.273	0.302
	LTE Band 41_LAT	20M	QPSK	50	24	Back	10mm	Reduced	39750	2506	20.20	20.80	1.148	62.9	1.006	0.19	0.499	0.576
	LTE Band 41_LAT	20M	QPSK	50	24	Back	10mm	Reduced	40185	2549.5	20.21	20.80	1.146	62.9	1.006	0.18	0.323	0.372
	LTE Band 41_LAT	20M	QPSK	50	24	Back	10mm	Reduced	41055	2636.5	20.38	20.80	1.102	62.9	1.006	-0.17	0.331	0.367
	LTE Band 41_LAT	20M	QPSK	50	24	Back	10mm	Reduced	41490	2680	20.36	20.80	1.107	62.9	1.006	-0.11	0.302	0.336
	LTE Band 41C_LAT	20M	QPSK	1	0	Back	10mm	Reduced	40620	2593	20.73	20.80	1.016	62.9	1.006	0.07	0.549	0.561
	LTE Band 41(HPUE)_UAT	20M	QPSK	1	49	Front	10mm	Reduced	40620	2593	19.17	19.80	1.156	42.9	1.009	0.04	0.153	0.178
	LTE Band 41(HPUE)_UAT	20M	QPSK	1	49	Back	10mm	Reduced	40620	2593	19.17	19.80	1.156	42.9	1.009	0.15	0.190	0.222
	LTE Band 41(HPUE)_UAT	20M	QPSK	1	49	Left Side	10mm	Reduced	40620	2593	19.17	19.80	1.156	42.9	1.009	0.13	0.001	0.001
	LTE Band 41(HPUE)_UAT	20M	QPSK	1	49	Right Side	10mm	Reduced	40620	2593	19.17	19.80	1.156	42.9	1.009	0.07	0.001	0.001
	LTE Band 41(HPUE)_UAT	20M	QPSK	1	49	Top Side	10mm	Reduced	40620	2593	19.17	19.80	1.156	42.9	1.009	0.16	0.472	0.551
	LTE Band 41(HPUE)_UAT	20M	QPSK	50	24	Front	10mm	Reduced	40620	2593	19.09	19.80	1.178	42.9	1.009	-0.16	0.157	0.187
	LTE Band 41(HPUE)_UAT	20M	QPSK	50	24	Back	10mm	Reduced	40620	2593	19.09	19.80	1.178	42.9	1.009	-0.15	0.284	0.337
	LTE Band 41(HPUE)_UAT	20M	QPSK	50	24	Left Side	10mm	Reduced	40620	2593	19.09	19.80	1.178	42.9	1.009	-0.04	0.001	0.001
	LTE Band 41(HPUE)_UAT	20M	QPSK	50	24	Right Side	10mm	Reduced	40620	2593	19.09	19.80	1.178	42.9	1.009	0.01	0.001	0.001
	LTE Band 41(HPUE)_UAT	20M	QPSK	50	24	Top Side	10mm	Reduced	40620	2593	19.09	19.80	1.178	42.9	1.009	-0.01	0.483	0.574
47	LTE Band 41(HPUE)_UAT	20M	QPSK	50	24	Top Side	10mm	Reduced	39750	2506	19.07	19.80	1.183	42.9	1.009	0.12	0.771	0.920
	LTE Band 41(HPUE)_UAT	20M	QPSK	50	24	Top Side	10mm	Reduced	40185	2549.5	19.08	19.80	1.180	42.9	1.009	0.11	0.503	0.599
	LTE Band 41(HPUE)_UAT	20M	QPSK	50	24	Top Side	10mm	Reduced	41055	2636.5	19.05	19.80	1.189	42.9	1.009	0.1	0.354	0.425
	LTE Band 41(HPUE)_UAT	20M	QPSK	50	24	Top Side	10mm	Reduced	41490	2680	18.98	19.80	1.208	42.9	1.009	-0.08	0.289	0.352
	LTE Band 41(HPUE)_UAT	20M	QPSK	100	0	Top Side	10mm	Reduced	40620	2593	19.09	19.80	1.178	42.9	1.009	0	0.467	0.555
	LTE Band 41(HPUE)_UAT	20M	QPSK	100	0	Top Side	10mm	Reduced	39750	2506	19.11	19.80	1.172	42.9	1.009	0.11	0.660	0.781

	LTE Band 41(HPUE)_UAT	20M	QPSK	100	0	Top Side	10mm	Reduced	40185	2549.5	19.03	19.80	1.194	42.9	1.009	-0.08	0.489	0.589
	LTE Band 41(HPUE)_UAT	20M	QPSK	100	0	Top Side	10mm	Reduced	41055	2636.5	18.99	19.80	1.205	42.9	1.009	-0.12	0.346	0.421
	LTE Band 41(HPUE)_UAT	20M	QPSK	100	0	Top Side	10mm	Reduced	41490	2680	19.01	19.80	1.199	42.9	1.009	0.03	0.284	0.344
	LTE Band 41C(HPUE)_UAT	20M	QPSK	1	0	Top Side	10mm	Reduced	40620	2593	19.19	19.80	1.151	42.9	1.009	0.02	0.681	0.791
	LTE Band 41(HPUE)_LAT	20M	QPSK	1	49	Front	10mm	Reduced	40620	2593	22.56	23.30	1.186	42.9	1.009	0.05	0.327	0.391
	LTE Band 41(HPUE)_LAT	20M	QPSK	1	49	Back	10mm	Reduced	40620	2593	22.56	23.30	1.186	42.9	1.009	0.02	0.358	0.428
	LTE Band 41(HPUE)_LAT	20M	QPSK	1	49	Left Side	10mm	Reduced	40620	2593	22.56	23.30	1.186	42.9	1.009	-0.01	0.094	0.112
	LTE Band 41(HPUE)_LAT	20M	QPSK	1	49	Right Side	10mm	Reduced	40620	2593	22.56	23.30	1.186	42.9	1.009	0.18	0.086	0.103
	LTE Band 41(HPUE)_LAT	20M	QPSK	1	49	Bottom Side	10mm	Reduced	40620	2593	22.56	23.30	1.186	42.9	1.009	-0.15	0.326	0.390
	LTE Band 41(HPUE)_LAT	20M	QPSK	50	24	Front	10mm	Reduced	40620	2593	22.55	23.30	1.189	42.9	1.009	-0.02	0.329	0.395
	LTE Band 41(HPUE)_LAT	20M	QPSK	50	24	Back	10mm	Reduced	40620	2593	22.55	23.30	1.189	42.9	1.009	0.18	0.362	0.434
	LTE Band 41(HPUE)_LAT	20M	QPSK	50	24	Left Side	10mm	Reduced	40620	2593	22.55	23.30	1.189	42.9	1.009	-0.04	0.100	0.120
	LTE Band 41(HPUE)_LAT	20M	QPSK	50	24	Right Side	10mm	Reduced	40620	2593	22.55	23.30	1.189	42.9	1.009	0.08	0.098	0.118
	LTE Band 41(HPUE)_LAT	20M	QPSK	50	24	Bottom Side	10mm	Reduced	40620	2593	22.55	23.30	1.189	42.9	1.009	0.05	0.331	0.397
	LTE Band 41(HPUE)_LAT	20M	QPSK	50	24	Back	10mm	Reduced	39750	2506	22.47	23.30	1.211	42.9	1.009	0.12	0.584	0.713
	LTE Band 41(HPUE)_LAT	20M	QPSK	50	24	Back	10mm	Reduced	40185	2549.5	22.52	23.30	1.197	42.9	1.009	0	0.372	0.449
	LTE Band 41(HPUE)_LAT	20M	QPSK	50	24	Back	10mm	Reduced	41055	2636.5	22.43	23.30	1.222	42.9	1.009	-0.06	0.318	0.392
	LTE Band 41(HPUE)_LAT	20M	QPSK	50	24	Back	10mm	Reduced	41490	2680	22.40	23.30	1.230	42.9	1.009	0	0.334	0.415
	LTE Band 41C(HPUE)_LAT	20M	QPSK	1	0	Back	10mm	Reduced	41055	2636.5	22.03	23.30	1.340	42.9	1.009	0.08	0.496	0.670
	LTE Band 48_UAT	20M	QPSK	1	49	Front	10mm	Reduced	55830	3609	18.37	18.80	1.104	62.9	1.006	-0.11	0.240	0.267
	LTE Band 48_UAT	20M	QPSK	1	49	Back	10mm	Reduced	55830	3609	18.37	18.80	1.104	62.9	1.006	0.02	0.358	0.398
	LTE Band 48_UAT	20M	QPSK	1	49	Left Side	10mm	Reduced	55830	3609	18.37	18.80	1.104	62.9	1.006	0.08	0.090	0.100
	LTE Band 48_UAT	20M	QPSK	1	49	Right Side	10mm	Reduced	55830	3609	18.37	18.80	1.104	62.9	1.006	-0.06	0.055	0.061
	LTE Band 48_UAT	20M	QPSK	1	49	Top Side	10mm	Reduced	55830	3609	18.37	18.80	1.104	62.9	1.006	-0.02	0.481	0.534
	LTE Band 48_UAT	20M	QPSK	1	49	Top Side	10mm	Reduced	55340	3560	18.13	18.80	1.167	62.9	1.006	-0.11	0.472	0.554
	LTE Band 48_UAT	20M	QPSK	1	49	Top Side	10mm	Reduced	56150	3641	18.30	18.80	1.122	62.9	1.006	-0.08	0.565	0.638
48	LTE Band 48_UAT	20M	QPSK	1	49	Top Side	10mm	Reduced	56640	3690	18.24	18.80	1.138	62.9	1.006	0.14	0.636	0.728
	LTE Band 48_UAT	20M	QPSK	1	49	Top Side	10mm	Reduced	56640	3690	18.24	18.80	1.138	62.9	1.006	-0.11	0.631	0.722
	LTE Band 48_UAT	20M	QPSK	50	24	Front	10mm	Reduced	55830	3609	18.36	18.80	1.107	62.9	1.006	-0.01	0.231	0.257
	LTE Band 48_UAT	20M	QPSK	50	24	Back	10mm	Reduced	55830	3609	18.36	18.80	1.107	62.9	1.006	-0.02	0.385	0.429
	LTE Band 48_UAT	20M	QPSK	50	24	Left Side	10mm	Reduced	55830	3609	18.36	18.80	1.107	62.9	1.006	-0.18	0.087	0.097
	LTE Band 48_UAT	20M	QPSK	50	24	Right Side	10mm	Reduced	55830	3609	18.36	18.80	1.107	62.9	1.006	-0.08	0.054	0.060
	LTE Band 48_UAT	20M	QPSK	50	24	Top Side	10mm	Reduced	55830	3609	18.36	18.80	1.107	62.9	1.006	-0.15	0.441	0.491
	LTE Band 48_UAT	20M	QPSK	50	24	Top Side	10mm	Reduced	55340	3560	18.29	18.80	1.125	62.9	1.006	-0.08	0.473	0.535
	LTE Band 48_UAT	20M	QPSK	50	24	Top Side	10mm	Reduced	56150	3641	18.33	18.80	1.114	62.9	1.006	-0.03	0.570	0.639
	LTE Band 48_UAT	20M	QPSK	50	24	Top Side	10mm	Reduced	56640	3690	18.25	18.80	1.135	62.9	1.006	0.07	0.635	0.725
	LTE Band 48_UAT	20M	QPSK	100	0	Top Side	10mm	Reduced	55830	3609	18.33	18.80	1.114	62.9	1.006	0.1	0.478	0.536
	LTE Band 48_UAT	20M	QPSK	100	0	Top Side	10mm	Reduced	55340	3560	18.10	18.80	1.175	62.9	1.006	0.07	0.462	0.546
	LTE Band 48_UAT	20M	QPSK	100	0	Top Side	10mm	Reduced	56150	3641	18.22	18.80	1.143	62.9	1.006	0.11	0.556	0.639
	LTE Band 48_UAT	20M	QPSK	100	0	Top Side	10mm	Reduced	56640	3690	18.23	18.80	1.140	62.9	1.006	0.1	0.627	0.719
	LTE Band 48C_UAT	20M	QPSK	1	0	Top Side	10mm	Reduced	56150	3641	18.34	18.80	1.112	62.9	1.006	0.06	0.641	0.717

<5G NR NSA SAR>

Plot No.	Band	BW (MHz)	Modulation	RB Size	RB offset	Mode	Test Position	Gap (mm)	Power Reduction	Ch.	Freq. (MHz)	Average Power (dBm)	Tune-Up Limit (dBm)	Tune-up Scaling Factor	Power Drift (dB)	Measured 1g SAR (W/kg)	Reported 1g SAR (W/kg)
	N2_UAT	20M	PI/2 BPSK	1	1	DFT-15	Front	10mm	Reduced	380000	1900	18.48	19.50	1.265	-0.04	0.282	0.357
	N2_UAT	20M	PI/2 BPSK	50	56	DFT-15	Front	10mm	Reduced	380000	1900	18.52	19.50	1.253	-0.12	0.278	0.349
	N2_UAT	20M	PI/2 BPSK	1	1	DFT-15	Back	10mm	Reduced	380000	1900	18.48	19.50	1.265	-0.01	0.297	0.375
	N2_UAT	20M	PI/2 BPSK	50	56	DFT-15	Back	10mm	Reduced	380000	1900	18.52	19.50	1.253	-0.18	0.321	0.403
	N2_UAT	20M	PI/2 BPSK	1	1	DFT-15	Left Side	10mm	Reduced	380000	1900	18.48	19.50	1.265	-0.16	0.046	0.058
	N2_UAT	20M	PI/2 BPSK	50	56	DFT-15	Left Side	10mm	Reduced	380000	1900	18.52	19.50	1.253	-0.1	0.050	0.062
	N2_UAT	20M	PI/2 BPSK	1	1	DFT-15	Right Side	10mm	Reduced	380000	1900	18.48	19.50	1.265	-0.06	0.032	0.040
	N2_UAT	20M	PI/2 BPSK	50	56	DFT-15	Right Side	10mm	Reduced	380000	1900	18.52	19.50	1.253	-0.09	0.034	0.043
	N2_UAT	20M	PI/2 BPSK	1	1	DFT-15	Top Side	10mm	Reduced	380000	1900	18.48	19.50	1.265	-0.09	0.514	0.650
	N2_UAT	20M	PI/2 BPSK	1	1	DFT-15	Top Side	10mm	Reduced	372000	1860	18.14	19.50	1.368	-0.16	0.389	0.533
	N2_UAT	20M	PI/2 BPSK	1	1	DFT-15	Top Side	10mm	Reduced	376000	1880	18.46	19.50	1.271	-0.13	0.428	0.543
	N2_UAT	20M	PI/2 BPSK	50	56	DFT-15	Top Side	10mm	Reduced	380000	1900	18.52	19.50	1.253	-0.12	0.506	0.634
	N2_UAT	20M	PI/2 BPSK	50	56	DFT-15	Top Side	10mm	Reduced	372000	1860	18.01	19.50	1.409	-0.01	0.408	0.576
	N2_UAT	20M	PI/2 BPSK	50	56	DFT-15	Top Side	10mm	Reduced	376000	1880	18.51	19.50	1.256	-0.14	0.467	0.587
	N2_UAT	20M	PI/2 BPSK	100	0	DFT-15	Top Side	10mm	Reduced	380000	1900	18.48	19.50	1.265	-0.16	0.505	0.638
	N2_LAT	20M	PI/2 BPSK	1	1	DFT-15	Front	10mm	Reduced	380000	1900	20.33	21.00	1.167	-0.14	0.378	0.441
	N2_LAT	20M	PI/2 BPSK	50	0	DFT-15	Front	10mm	Reduced	380000	1900	20.24	21.00	1.191	-0.18	0.388	0.462
	N2_LAT	20M	PI/2 BPSK	1	1	DFT-15	Back	10mm	Reduced	380000	1900	20.33	21.00	1.167	-0.19	0.436	0.509
	N2_LAT	20M	PI/2 BPSK	50	0	DFT-15	Back	10mm	Reduced	380000	1900	20.24	21.00	1.191	-0.14	0.448	0.534
	N2_LAT	20M	PI/2 BPSK	1	1	DFT-15	Left Side	10mm	Reduced	380000	1900	20.33	21.00	1.167	-0.02	0.078	0.091
	N2_LAT	20M	PI/2 BPSK	50	0	DFT-15	Left Side	10mm	Reduced	380000	1900	20.24	21.00	1.191	-0.17	0.072	0.086
	N2_LAT	20M	PI/2 BPSK	1	1	DFT-15	Right Side	10mm	Reduced	380000	1900	20.33	21.00	1.167	-0.19	0.085	0.099
	N2_LAT	20M	PI/2 BPSK	50	0	DFT-15	Right Side	10mm	Reduced	380000	1900	20.24	21.00	1.191	-0.11	0.081	0.096
	N2_LAT	20M	PI/2 BPSK	1	1	DFT-15	Bottom Side	10mm	Reduced	380000	1900	20.33	21.00	1.167	-0.14	0.535	0.624
	N2_LAT	20M	PI/2 BPSK	50	0	DFT-15	Bottom Side	10mm	Reduced	380000	1900	20.24	21.00	1.191	-0.16	0.549	0.654
	N2_LAT	20M	PI/2 BPSK	50	0	DFT-15	Bottom Side	10mm	Reduced	372000	1860	20.00	21.00	1.259	-0.03	0.460	0.579
49	N2_LAT	20M	PI/2 BPSK	50	0	DFT-15	Bottom Side	10mm	Reduced	376000	1880	20.19	21.00	1.205	-0.15	0.561	0.676
	N5_UAT	20M	PI/2 BPSK	1	1	DFT-15	Front	10mm	Reduced	167300	836.5	19.48	20.00	1.127	-0.11	0.107	0.121
	N5_UAT	20M	PI/2 BPSK	50	0	DFT-15	Front	10mm	Reduced	167300	836.5	19.39	20.00	1.151	-0.1	0.116	0.134
	N5_UAT	20M	PI/2 BPSK	1	1	DFT-15	Back	10mm	Reduced	167300	836.5	19.48	20.00	1.127	-0.14	0.154	0.174
	N5_UAT	20M	PI/2 BPSK	50	0	DFT-15	Back	10mm	Reduced	167300	836.5	19.39	20.00	1.151	-0.12	0.152	0.175
	N5_UAT	20M	PI/2 BPSK	1	1	DFT-15	Left Side	10mm	Reduced	167300	836.5	19.48	20.00	1.127	-0.04	0.226	0.255
	N5_UAT	20M	PI/2 BPSK	50	0	DFT-15	Left Side	10mm	Reduced	167300	836.5	19.39	20.00	1.151	-0.01	0.235	0.271
	N5_UAT	20M	PI/2 BPSK	50	0	DFT-15	Left Side	10mm	Reduced	166800	836.5	19.37	20.00	1.156	-0.01	0.242	0.280
50	N5_UAT	20M	PI/2 BPSK	50	0	DFT-15	Left Side	10mm	Reduced	167800	839	19.36	20.00	1.159	0.07	0.246	0.285
	N5_UAT	20M	PI/2 BPSK	1	1	DFT-15	Right Side	10mm	Reduced	167300	836.5	19.48	20.00	1.127	0.05	0.002	0.003
	N5_UAT	20M	PI/2 BPSK	50	0	DFT-15	Right Side	10mm	Reduced	167300	836.5	19.39	20.00	1.151	-0.08	0.002	0.003
	N5_UAT	20M	PI/2 BPSK	1	1	DFT-15	Top Side	10mm	Reduced	167300	836.5	19.48	20.00	1.127	0.02	0.002	0.003
	N5_UAT	20M	PI/2 BPSK	50	0	DFT-15	Top Side	10mm	Reduced	167300	836.5	19.39	20.00	1.151	0.08	0.002	0.003
	N5_LAT	20M	PI/2 BPSK	1	1	DFT-15	Front	10mm	Reduced	166800	834	22.66	23.30	1.159	-0.03	0.164	0.191
	N5_LAT	20M	PI/2 BPSK	50	56	DFT-15	Front	10mm	Reduced	166800	834	22.60	23.30	1.175	-0.04	0.149	0.175
	N5_LAT	20M	PI/2 BPSK	1	1	DFT-15	Back	10mm	Reduced	166800	834	22.66	23.30	1.159	-0.03	0.212	0.246
	N5_LAT	20M	PI/2 BPSK	50	56	DFT-15	Back	10mm	Reduced	166800	834	22.60	23.30	1.175	-0.06	0.215	0.253
	N5_LAT	20M	PI/2 BPSK	50	56	DFT-15	Back	10mm	Reduced	167300	836.5	22.58	23.30	1.180	0.02	0.215	0.254
	N5_LAT	20M	PI/2 BPSK	50	56	DFT-15	Back	10mm	Reduced	167800	839	22.54	23.30	1.191	-0.07	0.215	0.256
	N5_LAT	20M	PI/2 BPSK	1	1	DFT-15	Left Side	10mm	Reduced	166800	834	22.66	23.30	1.159	-0.03	0.082	0.095
	N5_LAT	20M	PI/2 BPSK	50	56	DFT-15	Left Side	10mm	Reduced	166800	834	22.60	23.30	1.175	-0.17	0.079	0.093
	N5_LAT	20M	PI/2 BPSK	1	1	DFT-15	Right Side	10mm	Reduced	166800	834	22.66	23.30	1.159	-0.11	0.136	0.158
	N5_LAT	20M	PI/2 BPSK	50	56	DFT-15	Right Side	10mm	Reduced	166800	834	22.60	23.30	1.175	-0.17	0.139	0.163
	N5_LAT	20M	PI/2 BPSK	1	1	DFT-15	Bottom Side	10mm	Reduced	166800	834	22.66	23.30	1.159	-0.01	0.120	0.139
	N5_LAT	20M	PI/2 BPSK	50	56	DFT-15	Bottom Side	10mm	Reduced	166800	834	22.60	23.30	1.175	0.13	0.117	0.137

Plot No.	Band	BW (MHz)	Modulation	RB Size	RB offset	Mode	Test Position	Gap (mm)	Power Reduction	Ch.	Freq. (MHz)	Average Power (dBm)	Tune-Up Limit (dBm)	Tune-up Scaling Factor	Power Drift (dB)	Measured 1g SAR (W/kg)	Reported 1g SAR (W/kg)
	N41_UAT	100M	PI/2 BPSK	1	137	DFT-30	Front	10mm	Reduced	528000	2640	19.34	19.50	1.038	0.09	0.253	0.262
	N41_UAT	100M	PI/2 BPSK	135	0	DFT-30	Front	10mm	Reduced	528000	2640	19.31	19.50	1.045	0.14	0.238	0.248
	N41_UAT	100M	PI/2 BPSK	1	137	DFT-30	Back	10mm	Reduced	528000	2640	19.34	19.50	1.038	-0.14	0.328	0.340
	N41_UAT	100M	PI/2 BPSK	135	0	DFT-30	Back	10mm	Reduced	528000	2640	19.31	19.50	1.045	-0.01	0.312	0.326
	N41_UAT	100M	PI/2 BPSK	1	137	DFT-30	Left Side	10mm	Reduced	528000	2640	19.34	19.50	1.038	0.12	0.041	0.042
	N41_UAT	100M	PI/2 BPSK	135	0	DFT-30	Left Side	10mm	Reduced	528000	2640	19.31	19.50	1.045	0.01	0.037	0.038
	N41_UAT	100M	PI/2 BPSK	1	137	DFT-30	Right Side	10mm	Reduced	528000	2640	19.34	19.50	1.038	0.11	0.023	0.024
	N41_UAT	100M	PI/2 BPSK	135	0	DFT-30	Right Side	10mm	Reduced	528000	2640	19.31	19.50	1.045	-0.06	0.018	0.019
	N41_UAT	100M	PI/2 BPSK	1	137	DFT-30	Top Side	10mm	Reduced	528000	2640	19.34	19.50	1.038	0.15	0.691	0.717
	N41_UAT	100M	PI/2 BPSK	1	137	DFT-30	Top Side	10mm	Reduced	509200	2546	18.61	19.50	1.227	0.07	0.329	0.404
	N41_UAT	100M	PI/2 BPSK	1	137	DFT-30	Top Side	10mm	Reduced	518600	2593	19.33	19.50	1.040	0.13	0.527	0.548
51	N41_UAT	100M	PI/2 BPSK	135	0	DFT-30	Top Side	10mm	Reduced	528000	2640	19.31	19.50	1.045	0.19	0.687	0.718
	N41_UAT	100M	PI/2 BPSK	135	0	DFT-30	Top Side	10mm	Reduced	509200	2546	18.52	19.50	1.253	0.11	0.342	0.428
	N41_UAT	100M	PI/2 BPSK	135	0	DFT-30	Top Side	10mm	Reduced	518600	2593	19.19	19.50	1.074	0.16	0.466	0.501
	N41_UAT	100M	PI/2 BPSK	270	0	DFT-30	Top Side	10mm	Reduced	528000	2640	19.24	19.50	1.062	0.13	0.675	0.717
	N41_LAT	100M	PI/2 BPSK	1	1	DFT-30	Front	10mm	Reduced	518600	2593	20.33	21.00	1.167	0.18	0.293	0.342
	N41_LAT	100M	PI/2 BPSK	135	0	DFT-30	Front	10mm	Reduced	518600	2593	20.09	21.00	1.233	0.06	0.314	0.387
	N41_LAT	100M	PI/2 BPSK	1	1	DFT-30	Back	10mm	Reduced	518600	2593	20.33	21.00	1.167	-0.1	0.382	0.446
	N41_LAT	100M	PI/2 BPSK	1	1	DFT-30	Back	10mm	Reduced	509200	2546	20.15	21.00	1.216	-0.12	0.351	0.427
	N41_LAT	100M	PI/2 BPSK	1	1	DFT-30	Back	10mm	Reduced	528000	2640	20.05	21.00	1.245	-0.19	0.355	0.442
	N41_LAT	100M	PI/2 BPSK	135	0	DFT-30	Back	10mm	Reduced	518600	2593	20.09	21.00	1.233	-0.12	0.358	0.441
	N41_LAT	100M	PI/2 BPSK	1	1	DFT-30	Left Side	10mm	Reduced	518600	2593	20.33	21.00	1.167	-0.12	0.106	0.124
	N41_LAT	100M	PI/2 BPSK	135	0	DFT-30	Left Side	10mm	Reduced	518600	2593	20.09	21.00	1.233	0.01	0.094	0.116
	N41_LAT	100M	PI/2 BPSK	1	1	DFT-30	Right Side	10mm	Reduced	518600	2593	20.33	21.00	1.167	-0.01	0.107	0.125
	N41_LAT	100M	PI/2 BPSK	135	0	DFT-30	Right Side	10mm	Reduced	518600	2593	20.09	21.00	1.233	0.12	0.081	0.100
	N41_LAT	100M	PI/2 BPSK	1	1	DFT-30	Bottom Side	10mm	Reduced	518600	2593	20.33	21.00	1.167	0	0.359	0.419
	N41_LAT	100M	PI/2 BPSK	135	0	DFT-30	Bottom Side	10mm	Reduced	518600	2593	20.09	21.00	1.233	-0.1	0.347	0.428

Plot No.	Band	BW (MHz)	Modulation	RB Size	RB offset	Mode	Test Position	Gap (mm)	Power Reduction	Ch.	Freq. (MHz)	Average Power (dBm)	Tune-Up Limit (dBm)	Tune-up Scaling Factor	Power Drift (dB)	Measured 1g SAR (W/kg)	Reported 1g SAR (W/kg)
	N66_UAT	20M	PI/2 BPSK	1	1	DFT-15	Front	10mm	Reduced	349000	1745	18.64	20.00	1.368	0.04	0.302	0.413
	N66_UAT	20M	PI/2 BPSK	50	0	DFT-15	Front	10mm	Reduced	349000	1745	18.62	20.00	1.374	0.04	0.273	0.375
	N66_UAT	20M	PI/2 BPSK	1	1	DFT-15	Back	10mm	Reduced	349000	1745	18.64	20.00	1.368	-0.08	0.286	0.391
	N66_UAT	20M	PI/2 BPSK	50	0	DFT-15	Back	10mm	Reduced	349000	1745	18.62	20.00	1.374	-0.14	0.287	0.395
	N66_UAT	20M	PI/2 BPSK	1	1	DFT-15	Left Side	10mm	Reduced	349000	1745	18.64	20.00	1.368	-0.18	0.105	0.143
	N66_UAT	20M	PI/2 BPSK	50	0	DFT-15	Left Side	10mm	Reduced	349000	1745	18.62	20.00	1.374	-0.1	0.100	0.137
	N66_UAT	20M	PI/2 BPSK	1	1	DFT-15	Right Side	10mm	Reduced	349000	1745	18.64	20.00	1.368	-0.11	0.017	0.023
	N66_UAT	20M	PI/2 BPSK	50	0	DFT-15	Right Side	10mm	Reduced	349000	1745	18.62	20.00	1.374	-0.14	0.017	0.023
	N66_UAT	20M	PI/2 BPSK	1	1	DFT-15	Top Side	10mm	Reduced	349000	1745	18.64	20.00	1.368	0.15	0.404	0.553
	N66_UAT	20M	PI/2 BPSK	50	0	DFT-15	Top Side	10mm	Reduced	349000	1745	18.62	20.00	1.374	0.11	0.415	0.570
	N66_UAT	20M	PI/2 BPSK	50	0	DFT-15	Top Side	10mm	Reduced	344000	1720	18.59	20.00	1.384	0.08	0.335	0.463
	N66_UAT	20M	PI/2 BPSK	50	56	DFT-15	Top Side	10mm	Reduced	354000	1770	18.52	20.00	1.406	-0.03	0.455	0.639
	N66_UAT	20M	PI/2 BPSK	100	0	DFT-15	Top Side	10mm	Reduced	349000	1745	17.59	20.00	1.742	-0.01	0.359	0.625
	N66_LAT	20M	PI/2 BPSK	1	1	DFT-15	Front	10mm	Reduced	349000	1745	22.32	23.00	1.169	-0.02	0.425	0.497
	N66_LAT	20M	PI/2 BPSK	50	0	DFT-15	Front	10mm	Reduced	349000	1745	22.30	23.00	1.175	-0.18	0.426	0.501
	N66_LAT	20M	PI/2 BPSK	1	1	DFT-15	Back	10mm	Reduced	349000	1745	22.32	23.00	1.169	0.11	0.494	0.578
	N66_LAT	20M	PI/2 BPSK	50	0	DFT-15	Back	10mm	Reduced	349000	1745	22.30	23.00	1.175	0.1	0.496	0.583
	N66_LAT	20M	PI/2 BPSK	1	1	DFT-15	Left Side	10mm	Reduced	349000	1745	22.32	23.00	1.169	0.17	0.191	0.223
	N66_LAT	20M	PI/2 BPSK	50	0	DFT-15	Left Side	10mm	Reduced	349000	1745	22.30	23.00	1.175	0.19	0.190	0.223
	N66_LAT	20M	PI/2 BPSK	1	1	DFT-15	Right Side	10mm	Reduced	349000	1745	22.32	23.00	1.169	0	0.126	0.147
	N66_LAT	20M	PI/2 BPSK	50	0	DFT-15	Right Side	10mm	Reduced	349000	1745	22.30	23.00	1.175	-0.1	0.125	0.147
	N66_LAT	20M	PI/2 BPSK	1	1	DFT-15	Bottom Side	10mm	Reduced	349000	1745	22.32	23.00	1.169	0.16	0.642	0.751
	N66_LAT	20M	PI/2 BPSK	1	1	DFT-15	Bottom Side	10mm	Reduced	344000	1720	22.30	23.00	1.175	0.05	0.667	0.784
52	N66_LAT	20M	PI/2 BPSK	1	1	DFT-15	Bottom Side	10mm	Reduced	354000	1770	22.18	23.00	1.208	0.04	0.661	0.798
	N66_LAT	20M	PI/2 BPSK	50	0	DFT-15	Bottom Side	10mm	Reduced	349000	1745	22.30	23.00	1.175	0.13	0.628	0.738
	N71_UAT	20M	PI/2 BPSK	1	1	DFT-15	Front	10mm	Reduced	134600	673	19.28	20.00	1.180	-0.11	0.119	0.140
	N71_UAT	20M	PI/2 BPSK	50	0	DFT-15	Front	10mm	Reduced	134600	673	19.09	20.00	1.233	-0.06	0.121	0.149
	N71_UAT	20M	PI/2 BPSK	1	1	DFT-15	Back	10mm	Reduced	134600	673	19.28	20.00	1.180	-0.11	0.157	0.185
	N71_UAT	20M	PI/2 BPSK	50	0	DFT-15	Back	10mm	Reduced	134600	673	19.09	20.00	1.233	-0.13	0.141	0.174
53	N71_UAT	20M	PI/2 BPSK	1	1	DFT-15	Left Side	10mm	Reduced	134600	673	19.28	20.00	1.180	-0.14	0.193	0.227
	N71_UAT	20M	PI/2 BPSK	1	1	DFT-15	Left Side	10mm	Reduced	136100	680.5	19.11	20.00	1.227	-0.12	0.185	0.227
	N71_UAT	20M	PI/2 BPSK	1	1	DFT-15	Left Side	10mm	Reduced	137600	688	19.05	20.00	1.245	-0.19	0.159	0.198
	N71_UAT	20M	PI/2 BPSK	50	0	DFT-15	Left Side	10mm	Reduced	134600	673	19.09	20.00	1.233	-0.16	0.184	0.226
	N71_UAT	20M	PI/2 BPSK	1	1	DFT-15	Right Side	10mm	Reduced	134600	673	19.28	20.00	1.180	0.17	0.013	0.016
	N71_UAT	20M	PI/2 BPSK	50	0	DFT-15	Right Side	10mm	Reduced	134600	673	19.09	20.00	1.233	0.15	0.011	0.014
	N71_UAT	20M	PI/2 BPSK	1	1	DFT-15	Top Side	10mm	Reduced	134600	673	19.28	20.00	1.180	-0.05	0.002	0.003
	N71_UAT	20M	PI/2 BPSK	50	0	DFT-15	Top Side	10mm	Reduced	134600	673	19.09	20.00	1.233	-0.04	0.002	0.003
	N71_LAT	20M	PI/2 BPSK	1	1	DFT-15	Front	10mm	Reduced	134600	673	20.74	22.30	1.432	-0.1	0.108	0.155
	N71_LAT	20M	PI/2 BPSK	50	0	DFT-15	Front	10mm	Reduced	134600	673	20.65	22.30	1.462	-0.09	0.098	0.143
	N71_LAT	20M	PI/2 BPSK	1	1	DFT-15	Back	10mm	Reduced	134600	673	20.74	22.30	1.432	-0.03	0.136	0.194
	N71_LAT	20M	PI/2 BPSK	1	1	DFT-15	Back	10mm	Reduced	136100	680.5	20.56	22.30	1.493	0	0.128	0.191
	N71_LAT	20M	PI/2 BPSK	1	1	DFT-15	Back	10mm	Reduced	137600	688	20.53	22.30	1.503	-0.03	0.126	0.189
	N71_LAT	20M	PI/2 BPSK	50	0	DFT-15	Back	10mm	Reduced	134600	673	20.65	22.30	1.462	0.01	0.131	0.191
	N71_LAT	20M	PI/2 BPSK	1	1	DFT-15	Left Side	10mm	Reduced	134600	673	20.74	22.30	1.432	0.03	0.048	0.068
	N71_LAT	20M	PI/2 BPSK	50	0	DFT-15	Left Side	10mm	Reduced	134600	673	20.65	22.30	1.462	-0.11	0.043	0.062
	N71_LAT	20M	PI/2 BPSK	1	1	DFT-15	Right Side	10mm	Reduced	134600	673	20.74	22.30	1.432	-0.11	0.095	0.137
	N71_LAT	20M	PI/2 BPSK	50	0	DFT-15	Right Side	10mm	Reduced	134600	673	20.65	22.30	1.462	-0.01	0.090	0.132
	N71_LAT	20M	PI/2 BPSK	1	1	DFT-15	Bottom Side	10mm	Reduced	134600	673	20.74	22.30	1.432	-0.19	0.060	0.086
	N71_LAT	20M	PI/2 BPSK	50	0	DFT-15	Bottom Side	10mm	Reduced	134600	673	20.65	22.30	1.462	-0.17	0.065	0.095

<WLAN SAR>

Plot No.	Band	Mode	Test Position	Gap (mm)	output Power state	Ch.	Freq. (MHz)	Average Power (dBm)	Tune-Up Limit (dBm)	Tune-up Scaling Factor	Duty Cycle %	Duty Cycle Scaling Factor	Power Drift (dB)	Measured 1g SAR (W/kg)	Reported 1g SAR (W/kg)
	WLAN2.4GHz	802.11b 1Mbps	Front	10mm	1	11	2462	15.91	17.91	1.585	100	1.000	-0.1	0.121	0.192
54	WLAN2.4GHz	802.11b 1Mbps	Back	10mm	1	11	2462	15.91	17.91	1.585	100	1.000	0.16	0.684	1.084
	WLAN2.4GHz	802.11b 1Mbps	Right Side	10mm	1	11	2462	15.91	17.91	1.585	100	1.000	0	0.276	0.437
	WLAN2.4GHz	802.11b 1Mbps	Top Side	10mm	1	11	2462	15.91	17.91	1.585	100	1.000	-0.11	0.150	0.238
	WLAN2.4GHz	802.11b 1Mbps	Back	10mm	1	1	2412	15.71	17.71	1.585	100	1.000	0.04	0.526	0.834
	WLAN2.4GHz	802.11b 1Mbps	Back	10mm	1	6	2437	15.66	17.66	1.585	100	1.000	0.11	0.638	1.011
	WLAN2.4GHz	802.11b 1Mbps	Front	10mm	2	11	2462	13.87	15.87	1.585	100	1.000	0.06	0.077	0.122
	WLAN2.4GHz	802.11b 1Mbps	Back	10mm	2	11	2462	13.87	15.87	1.585	100	1.000	0.09	0.366	0.580
	WLAN2.4GHz	802.11b 1Mbps	Right Side	10mm	2	11	2462	13.87	15.87	1.585	100	1.000	-0.05	0.150	0.238
	WLAN2.4GHz	802.11b 1Mbps	Top Side	10mm	2	11	2462	13.87	15.87	1.585	100	1.000	0.04	0.100	0.158
	WLAN2.4GHz	802.11b 1Mbps	Back	10mm	2	1	2412	13.67	15.67	1.585	100	1.000	0.14	0.334	0.529
	WLAN2.4GHz	802.11b 1Mbps	Back	10mm	2	6	2437	13.61	15.61	1.585	100	1.000	-0.07	0.390	0.618
	WLAN2.4GHz	802.11b 1Mbps	Front	10mm	3	11	2462	10.91	12.91	1.585	100	1.000	0.06	0.039	0.061
	WLAN2.4GHz	802.11b 1Mbps	Back	10mm	3	11	2462	10.91	12.91	1.585	100	1.000	0.05	0.185	0.293
	WLAN2.4GHz	802.11b 1Mbps	Right Side	10mm	3	11	2462	10.91	12.91	1.585	100	1.000	0.11	0.076	0.120
	WLAN2.4GHz	802.11b 1Mbps	Top Side	10mm	3	11	2462	10.91	12.91	1.585	100	1.000	-0.18	0.051	0.081
	WLAN2.4GHz	802.11b 1Mbps	Back	10mm	3	1	2412	10.71	12.71	1.585	100	1.000	0.1	0.169	0.268
	WLAN2.4GHz	802.11b 1Mbps	Back	10mm	3	6	2437	10.66	12.66	1.585	100	1.000	-0.04	0.198	0.314
	WLAN5GHz	802.11n-HT40 MCS0	Front	10mm	1	38	5190	17.73	19.73	1.585	98.08	1.020	-0.14	0.013	0.021
	WLAN5GHz	802.11n-HT40 MCS0	Back	10mm	1	38	5190	17.73	19.73	1.585	98.08	1.020	0.15	0.406	0.656
	WLAN5GHz	802.11n-HT40 MCS0	Right Side	10mm	1	38	5190	17.73	19.73	1.585	98.08	1.020	-0.08	0.154	0.249
	WLAN5GHz	802.11n-HT40 MCS0	Top Side	10mm	1	38	5190	17.73	19.73	1.585	98.08	1.020	0.16	0.108	0.175
55	WLAN5GHz	802.11n-HT40 MCS0	Back	10mm	1	46	5230	17.72	19.72	1.585	98.08	1.020	0.16	0.531	0.858
	WLAN5GHz	802.11n-HT40 MCS0	Front	10mm	2	38	5190	16.66	18.66	1.585	98.08	1.020	0.06	0.002	0.003
	WLAN5GHz	802.11n-HT40 MCS0	Back	10mm	2	38	5190	16.66	18.66	1.585	98.08	1.020	0.04	0.261	0.422
	WLAN5GHz	802.11n-HT40 MCS0	Right Side	10mm	2	38	5190	16.66	18.66	1.585	98.08	1.020	0.09	0.231	0.373
	WLAN5GHz	802.11n-HT40 MCS0	Top Side	10mm	2	38	5190	16.66	18.66	1.585	98.08	1.020	-0.08	0.025	0.040
	WLAN5GHz	802.11n-HT40 MCS0	Back	10mm	2	46	5230	16.64	18.64	1.585	98.08	1.020	-0.01	0.362	0.585
	WLAN5GHz	802.11n-HT40 MCS0	Front	10mm	3	38	5190	13.75	15.75	1.585	98.08	1.020	-0.1	0.001	0.002
	WLAN5GHz	802.11n-HT40 MCS0	Back	10mm	3	38	5190	13.75	15.75	1.585	98.08	1.020	0.05	0.131	0.212
	WLAN5GHz	802.11n-HT40 MCS0	Right Side	10mm	3	38	5190	13.75	15.75	1.585	98.08	1.020	0	0.116	0.188
	WLAN5GHz	802.11n-HT40 MCS0	Top Side	10mm	3	38	5190	13.75	15.75	1.585	98.08	1.020	-0.11	0.013	0.021
	WLAN5GHz	802.11n-HT40 MCS0	Back	10mm	3	46	5230	13.73	15.73	1.585	98.08	1.020	0.04	0.181	0.293

Plot No.	Band	Mode	Test Position	Gap (mm)	output Power state	Ch.	Freq. (MHz)	Average Power (dBm)	Tune-Up Limit (dBm)	Tune-up Scaling Factor	Duty Cycle %	Duty Cycle Scaling Factor	Power Drift (dB)	Measured 1g SAR (W/kg)	Reported 1g SAR (W/kg)
	WLAN5GHz	802.11n-HT40 MCS0	Front	10mm	1	151	5755	14.52	16.52	1.585	98.08	1.020	-0.12	0.010	0.016
	WLAN5GHz	802.11n-HT40 MCS0	Back	10mm	1	151	5755	14.52	16.52	1.585	98.08	1.020	0.13	0.546	0.883
	WLAN5GHz	802.11n-HT40 MCS0	Right Side	10mm	1	151	5755	14.52	16.52	1.585	98.08	1.020	0.07	0.153	0.247
	WLAN5GHz	802.11n-HT40 MCS0	Top Side	10mm	1	151	5755	14.52	16.52	1.585	98.08	1.020	-0.02	0.109	0.176
56	WLAN5GHz	802.11n-HT40 MCS0	Back	10mm	1	159	5795	14.24	16.24	1.585	98.08	1.020	0.07	0.655	1.059
	WLAN5GHz	802.11n-HT40 MCS0	Front	10mm	2	151	5755	13.49	15.49	1.585	98.08	1.020	0.12	0.002	0.003
	WLAN5GHz	802.11n-HT40 MCS0	Back	10mm	2	151	5755	13.49	15.49	1.585	98.08	1.020	0.11	0.340	0.550
	WLAN5GHz	802.11n-HT40 MCS0	Right Side	10mm	2	151	5755	13.49	15.49	1.585	98.08	1.020	-0.09	0.417	0.674
	WLAN5GHz	802.11n-HT40 MCS0	Top Side	10mm	2	151	5755	13.49	15.49	1.585	98.08	1.020	0.07	0.067	0.108
	WLAN5GHz	802.11n-HT40 MCS0	Back	10mm	2	159	5795	13.15	15.15	1.585	98.08	1.020	0.01	0.329	0.532
	WLAN5GHz	802.11n-HT40 MCS0	Front	10mm	3	151	5755	11.52	13.52	1.585	98.08	1.020	0.14	0.001	0.002
	WLAN5GHz	802.11n-HT40 MCS0	Back	10mm	3	151	5755	11.52	13.52	1.585	98.08	1.020	-0.02	0.212	0.343
	WLAN5GHz	802.11n-HT40 MCS0	Right Side	10mm	3	151	5755	11.52	13.52	1.585	98.08	1.020	0.11	0.260	0.420
	WLAN5GHz	802.11n-HT40 MCS0	Top Side	10mm	3	151	5755	11.52	13.52	1.585	98.08	1.020	0	0.042	0.068
	WLAN5GHz	802.11n-HT40 MCS0	Back	10mm	3	159	5795	11.24	13.24	1.585	98.08	1.020	0.1	0.208	0.336

<Bluetooth SAR>

Plot No.	Band	Mode	Test Position	Gap (mm)	Antenna	Power Reduction	Ch.	Freq. (MHz)	Average Power (dBm)	Tune-Up Limit (dBm)	Tune-up Scaling Factor	Power Drift (dB)	Measured 1g SAR (W/kg)	Reported 1g SAR (W/kg)
	Bluetooth	DH5 1Mbps	Front	10mm	Chain 0	Full	39	2441	14.07	16.07	1.585	0.11	0.030	0.048
	Bluetooth	DH5 1Mbps	Back	10mm	Chain 0	Full	39	2441	14.07	16.07	1.585	0.13	0.124	0.197
	Bluetooth	DH5 1Mbps	Right Side	10mm	Chain 0	Full	39	2441	14.07	16.07	1.585	-0.08	0.080	0.127
57	Bluetooth	DH5 1Mbps	Top Side	10mm	Chain 0	Full	39	2441	14.07	16.07	1.585	0.1	0.195	0.309
	Bluetooth	DH5 1Mbps	Top Side	10mm	Chain 0	Full	0	2402	13.05	15.05	1.585	-0.02	0.156	0.247
	Bluetooth	DH5 1Mbps	Top Side	10mm	Chain 0	Full	78	2480	12.10	14.10	1.585	0.06	0.168	0.266
	Bluetooth	DH5 1Mbps	Front	10mm	Chain 1	Full	39	2441	8.52	10.52	1.585	0.04	0.026	0.041
	Bluetooth	DH5 1Mbps	Back	10mm	Chain 1	Full	39	2441	8.52	10.52	1.585	-0.02	0.120	0.190
	Bluetooth	DH5 1Mbps	Right Side	10mm	Chain 1	Full	39	2441	8.52	10.52	1.585	0.06	0.084	0.133
	Bluetooth	DH5 1Mbps	Top Side	10mm	Chain 1	Full	39	2441	8.52	10.52	1.585	-0.09	0.034	0.054
	Bluetooth	DH5 1Mbps	Back	10mm	Chain 1	Full	0	2402	7.72	9.72	1.585	-0.11	0.096	0.152
	Bluetooth	DH5 1Mbps	Back	10mm	Chain 1	Full	78	2480	6.84	8.84	1.585	-0.07	0.102	0.162

17.3 Body Worn Accessory SAR

<GSM SAR>

Plot No.	Band	Mode	Test Position	Gap (mm)	Power Reduction	Ch.	Freq. (MHz)	Average Power (dBm)	Tune-Up Limit (dBm)	Tune-up Scaling Factor	Power Drift (dB)	Measured 1g SAR (W/kg)	Reported 1g SAR (W/kg)
	GSM850_UAT	GPRS(3 Tx slots)	Front	15mm	Full	128	824.2	28.54	29.80	1.337	0.06	0.233	0.311
	GSM850_UAT	GPRS(3 Tx slots)	Back	15mm	Full	128	824.2	28.54	29.80	1.337	-0.04	0.246	0.329
58	GSM850_UAT	GPRS(3 Tx slots)	Back	15mm	Full	189	836.4	28.44	29.80	1.368	-0.07	0.307	0.420
	GSM850_UAT	GPRS(3 Tx slots)	Back	15mm	Full	251	848.8	28.39	29.80	1.384	0.01	0.301	0.416
	GSM850_LAT	GPRS(3 Tx slots)	Front	15mm	Full	128	824.2	28.68	29.80	1.294	0.03	0.164	0.212
	GSM850_LAT	GPRS(3 Tx slots)	Back	15mm	Full	128	824.2	28.68	29.80	1.294	0.06	0.223	0.289
	GSM850_LAT	GPRS(3 Tx slots)	Back	15mm	Full	189	836.4	28.62	29.80	1.312	-0.15	0.270	0.354
	GSM850_LAT	GPRS(3 Tx slots)	Back	15mm	Full	251	848.8	28.54	29.80	1.337	0.04	0.275	0.368
	GSM1900_UAT	GPRS(3 Tx slots)	Front	15mm	Full	661	1880	24.19	24.70	1.125	0.12	0.258	0.290
	GSM1900_UAT	GPRS(3 Tx slots)	Back	15mm	Full	661	1880	24.19	24.70	1.125	-0.01	0.267	0.300
	GSM1900_UAT	GPRS(3 Tx slots)	Back	15mm	Full	512	1850.2	23.87	24.70	1.211	-0.06	0.227	0.275
	GSM1900_UAT	GPRS(3 Tx slots)	Back	15mm	Full	810	1909.8	24.02	24.70	1.169	0.07	0.274	0.320
	GSM1900_LAT	GPRS(3 Tx slots)	Front	15mm	Full	661	1880	25.72	26.50	1.197	0.04	0.231	0.276
	GSM1900_LAT	GPRS(3 Tx slots)	Back	15mm	Full	661	1880	25.72	26.50	1.197	-0.14	0.239	0.286
	GSM1900_LAT	GPRS(3 Tx slots)	Back	15mm	Full	512	1850.2	25.52	26.50	1.253	0.05	0.212	0.266
59	GSM1900_LAT	GPRS(3 Tx slots)	Back	15mm	Full	810	1909.8	25.67	26.50	1.211	0.18	0.290	0.351

<WCDMA SAR>

Plot No.	Band	Mode	Test Position	Gap (mm)	Power Reduction	Ch.	Freq. (MHz)	Average Power (dBm)	Tune-Up Limit (dBm)	Tune-up Scaling Factor	Power Drift (dB)	Measured 1g SAR (W/kg)	Reported 1g SAR (W/kg)
	WCDMA V_UAT	RMC 12.2Kbps	Front	15mm	Full	4182	836.4	23.95	24.80	1.216	0.04	0.140	0.170
60	WCDMA V_UAT	RMC 12.2Kbps	Back	15mm	Full	4182	836.4	23.95	24.80	1.216	-0.19	0.329	0.400
	WCDMA V_UAT	RMC 12.2Kbps	Back	15mm	Full	4132	826.4	23.93	24.80	1.222	0.08	0.326	0.398
	WCDMA V_UAT	RMC 12.2Kbps	Back	15mm	Full	4233	846.6	23.85	24.80	1.245	-0.04	0.318	0.396
	WCDMA V_LAT	RMC 12.2Kbps	Front	15mm	Full	4182	836.4	24.12	24.80	1.169	0.02	0.086	0.101
	WCDMA V_LAT	RMC 12.2Kbps	Back	15mm	Full	4182	836.4	24.12	24.80	1.169	-0.13	0.302	0.353
	WCDMA V_LAT	RMC 12.2Kbps	Back	15mm	Full	4132	826.4	24.09	24.80	1.178	0.04	0.301	0.354
	WCDMA V_LAT	RMC 12.2Kbps	Back	15mm	Full	4233	846.6	24.10	24.80	1.175	0.17	0.287	0.337
	WCDMA IV_UAT	RMC 12.2Kbps	Front	15mm	Full	1413	1732.6	22.08	23.00	1.236	0.06	0.311	0.384
	WCDMA IV_UAT	RMC 12.2Kbps	Back	15mm	Full	1413	1732.6	22.08	23.00	1.236	0.08	0.350	0.433
	WCDMA IV_UAT	RMC 12.2Kbps	Back	15mm	Full	1312	1712.4	21.97	23.00	1.268	-0.19	0.303	0.384
	WCDMA IV_UAT	RMC 12.2Kbps	Back	15mm	Full	1513	1752.6	22.04	23.00	1.247	0.03	0.364	0.454
	WCDMA IV_LAT	RMC 12.2Kbps	Front	15mm	Full	1413	1732.6	23.99	24.80	1.205	0.04	0.476	0.574
	WCDMA IV_LAT	RMC 12.2Kbps	Back	15mm	Full	1413	1732.6	23.99	24.80	1.205	-0.05	0.481	0.580
61	WCDMA IV_LAT	RMC 12.2Kbps	Back	15mm	Full	1312	1712.4	23.94	24.80	1.219	0.1	0.513	0.625
	WCDMA IV_LAT	RMC 12.2Kbps	Back	15mm	Full	1513	1752.6	23.97	24.80	1.211	0.06	0.464	0.562
	WCDMA II_UAT	RMC 12.2Kbps	Front	15mm	Full	9400	1880	22.37	23.00	1.156	0.12	0.319	0.369
	WCDMA II_UAT	RMC 12.2Kbps	Back	15mm	Full	9400	1880	22.37	23.00	1.156	-0.03	0.361	0.417
	WCDMA II_UAT	RMC 12.2Kbps	Back	15mm	Full	9262	1852.4	22.20	23.00	1.202	0.05	0.340	0.409
	WCDMA II_UAT	RMC 12.2Kbps	Back	15mm	Full	9538	1907.6	22.21	23.00	1.199	-0.01	0.338	0.405
	WCDMA II_LAT	RMC 12.2Kbps	Front	15mm	Full	9400	1880	24.30	24.80	1.122	-0.07	0.552	0.619
	WCDMA II_LAT	RMC 12.2Kbps	Back	15mm	Full	9400	1880	24.30	24.80	1.122	-0.13	0.571	0.641
	WCDMA II_LAT	RMC 12.2Kbps	Back	15mm	Full	9262	1852.4	24.10	24.80	1.175	0.05	0.458	0.538
62	WCDMA II_LAT	RMC 12.2Kbps	Back	15mm	Full	9538	1907.6	24.18	24.80	1.153	0.09	0.557	0.642

<CDMA SAR>

Plot No.	Band	Mode	Test Position	Gap (mm)	Power Reduction	Ch.	Freq. (MHz)	Average Power (dBm)	Tune-Up Limit (dBm)	Tune-up Scaling Factor	Power Drift (dB)	Measured 1g SAR (W/kg)	Reported 1g SAR (W/kg)
	CDMA2000 BC0_UAT	RC3 SO32 (F+SCH)	Front	15mm	Full	384	836.52	23.59	24.80	1.321	-0.05	0.148	0.196
	CDMA2000 BC0_UAT	RC3 SO32 (F+SCH)	Back	15mm	Full	384	836.52	23.59	24.80	1.321	-0.1	0.185	0.244
	CDMA2000 BC0_UAT	RC3 SO32 (F+SCH)	Back	15mm	Full	1013	824.7	23.57	24.80	1.327	-0.03	0.194	0.258
	CDMA2000 BC0_UAT	RC3 SO32 (F+SCH)	Back	15mm	Full	777	848.31	23.53	24.80	1.340	0.02	0.186	0.249
	CDMA2000 BC0_LAT	RC3 SO32 (F+SCH)	Front	15mm	Full	384	836.52	23.87	24.80	1.239	0.13	0.174	0.216
63	CDMA2000 BC0_LAT	RC3 SO32 (F+SCH)	Back	15mm	Full	384	836.52	23.87	24.80	1.238	0.01	0.264	0.327
	CDMA2000 BC0_LAT	RC3 SO32 (F+SCH)	Back	15mm	Full	1013	824.7	23.82	24.80	1.253	0.05	0.260	0.326
	CDMA2000 BC0_LAT	RC3 SO32 (F+SCH)	Back	15mm	Full	777	848.31	23.82	24.80	1.253	0.12	0.260	0.326
	CDMA2000 BC10_UAT	RC3 SO32 (F+SCH)	Front	15mm	Full	580	820.5	23.75	24.80	1.274	-0.07	0.122	0.155
	CDMA2000 BC10_UAT	RC3 SO32 (F+SCH)	Back	15mm	Full	580	820.5	23.75	24.80	1.274	-0.06	0.153	0.195
	CDMA2000 BC10_UAT	RC3 SO32 (F+SCH)	Back	15mm	Full	476	817.9	23.71	24.80	1.285	0.14	0.154	0.198
	CDMA2000 BC10_UAT	RC3 SO32 (F+SCH)	Back	15mm	Full	684	823.1	23.67	24.80	1.297	0.12	0.151	0.196
	CDMA2000 BC10_LAT	RC3 SO32 (F+SCH)	Front	15mm	Full	580	820.5	23.97	24.80	1.211	-0.08	0.200	0.242
	CDMA2000 BC10_LAT	RC3 SO32 (F+SCH)	Back	15mm	Full	580	820.5	23.97	24.80	1.211	0.06	0.266	0.322
64	CDMA2000 BC10_LAT	RC3 SO32 (F+SCH)	Back	15mm	Full	476	817.9	23.88	24.80	1.236	0.06	0.263	0.325
	CDMA2000 BC10_LAT	RC3 SO32 (F+SCH)	Back	15mm	Full	684	823.1	23.94	24.80	1.219	0.01	0.265	0.323
	CDMA2000 BC1_UAT	RC3 SO32 (F+SCH)	Front	15mm	Full	600	1880	21.69	23.00	1.352	-0.03	0.071	0.096
	CDMA2000 BC1_UAT	RC3 SO32 (F+SCH)	Back	15mm	Full	600	1880	21.69	23.00	1.352	-0.19	0.079	0.107
	CDMA2000 BC1_UAT	RC3 SO32 (F+SCH)	Back	15mm	Full	25	1851.25	21.44	23.00	1.432	-0.15	0.076	0.109
	CDMA2000 BC1_UAT	RC3 SO32 (F+SCH)	Back	15mm	Full	1175	1908.75	21.53	23.00	1.403	-0.07	0.078	0.109
	CDMA2000 BC1_LAT	RC3 SO32 (F+SCH)	Front	15mm	Full	600	1880	23.76	24.80	1.271	0.07	0.539	0.685
	CDMA2000 BC1_LAT	RC3 SO32 (F+SCH)	Back	15mm	Full	600	1880	23.76	24.80	1.271	-0.04	0.542	0.689
	CDMA2000 BC1_LAT	RC3 SO32 (F+SCH)	Back	15mm	Full	25	1851.25	23.48	24.80	1.355	0.06	0.460	0.623
65	CDMA2000 BC1_LAT	RC3 SO32 (F+SCH)	Back	15mm	Full	1175	1908.75	23.64	24.80	1.306	0.13	0.600	0.784

<FDD LTE SAR>

Plot No.	Band	BW (MHz)	Modulation	RB Size	RB offset	Test Position	Gap (mm)	Power Reduction	Ch.	Freq. (MHz)	Average Power (dBm)	Tune-Up Limit (dBm)	Tune-up Scaling Factor	Power Drift (dB)	Measured 1g SAR (W/kg)	Reported 1g SAR (W/kg)
	LTE Band 71_UAT	20M	QPSK	1	0	Front	15mm	Full	133322	673	23.65	23.80	1.035	0.03	0.232	0.240
66	LTE Band 71_UAT	20M	QPSK	1	0	Back	15mm	Full	133322	673	23.65	23.80	1.035	-0.07	0.276	0.286
	LTE Band 71_UAT	20M	QPSK	50	24	Front	15mm	Full	133322	673	22.67	22.80	1.030	0.08	0.207	0.213
	LTE Band 71_UAT	20M	QPSK	50	24	Back	15mm	Full	133322	673	22.67	22.80	1.030	-0.03	0.253	0.261
	LTE Band 71_LAT	20M	QPSK	1	0	Front	15mm	Full	133322	673	23.65	23.80	1.035	0.09	0.198	0.205
	LTE Band 71_LAT	20M	QPSK	1	0	Back	15mm	Full	133322	673	23.65	23.80	1.035	-0.14	0.260	0.269
	LTE Band 71_LAT	20M	QPSK	50	24	Front	15mm	Full	133322	673	22.69	22.80	1.026	0.01	0.161	0.165
	LTE Band 71_LAT	20M	QPSK	50	24	Back	15mm	Full	133322	673	22.69	22.80	1.026	0.11	0.234	0.240
	LTE Band 12_UAT	10M	QPSK	1	25	Front	15mm	Full	23095	707.5	22.98	23.80	1.208	0.06	0.286	0.345
	LTE Band 12_UAT	10M	QPSK	1	25	Back	15mm	Full	23095	707.5	22.98	23.80	1.208	-0.16	0.318	0.384
	LTE Band 12_UAT	10M	QPSK	25	12	Front	15mm	Full	23095	707.5	21.99	22.80	1.205	0.08	0.223	0.269
	LTE Band 12_UAT	10M	QPSK	25	12	Back	15mm	Full	23095	707.5	21.99	22.80	1.205	-0.03	0.273	0.329
	LTE Band 12_LAT	10M	QPSK	1	25	Front	15mm	Full	23095	707.5	22.94	23.80	1.219	0.05	0.235	0.286
67	LTE Band 12_LAT	10M	QPSK	1	25	Back	15mm	Full	23095	707.5	22.94	23.80	1.219	-0.03	0.323	0.394
	LTE Band 12_LAT	10M	QPSK	25	12	Front	15mm	Full	23095	707.5	22.10	22.80	1.175	0.09	0.192	0.226
	LTE Band 12_LAT	10M	QPSK	25	12	Back	15mm	Full	23095	707.5	22.10	22.80	1.175	-0.11	0.292	0.343

Plot No.	Band	BW (MHz)	Modulation	RB Size	RB offset	Test Position	Gap (mm)	Power Reduction	Ch.	Freq. (MHz)	Average Power (dBm)	Tune-Up Limit (dBm)	Tune-up Scaling Factor	Power Drift (dB)	Measured 1g SAR (W/kg)	Reported 1g SAR (W/kg)
	LTE Band 13_UAT	10M	QPSK	1	0	Front	15mm	Full	23230	782	22.69	23.80	1.291	0.01	0.273	0.353
68	LTE Band 13_UAT	10M	QPSK	1	0	Back	15mm	Full	23230	782	22.69	23.80	1.291	0.13	0.316	0.408
	LTE Band 13_UAT	10M	QPSK	25	12	Front	15mm	Full	23230	782	21.83	22.80	1.250	0.05	0.224	0.280
	LTE Band 13_UAT	10M	QPSK	25	12	Back	15mm	Full	23230	782	21.83	22.80	1.250	-0.03	0.262	0.328
	LTE Band 13_LAT	10M	QPSK	1	0	Front	15mm	Full	23230	782	22.92	23.80	1.225	0.12	0.233	0.285
	LTE Band 13_LAT	10M	QPSK	1	0	Back	15mm	Full	23230	782	22.92	23.80	1.225	0.08	0.316	0.387
	LTE Band 13_LAT	10M	QPSK	25	12	Front	15mm	Full	23230	782	22.03	22.80	1.194	0.06	0.186	0.222
	LTE Band 13_LAT	10M	QPSK	25	12	Back	15mm	Full	23230	782	22.03	22.80	1.194	0.09	0.228	0.272
	LTE Band 5_UAT	10M	QPSK	1	49	Front	15mm	Full	20525	836.5	22.61	23.80	1.315	0.01	0.235	0.309
69	LTE Band 5_UAT	10M	QPSK	1	49	Back	15mm	Full	20525	836.5	22.61	23.80	1.315	-0.12	0.288	0.379
	LTE Band 5_UAT	10M	QPSK	25	12	Front	15mm	Full	20525	836.5	21.62	22.80	1.312	0.06	0.189	0.248
	LTE Band 5_UAT	10M	QPSK	25	12	Back	15mm	Full	20525	836.5	21.62	22.80	1.312	-0.09	0.229	0.300
	LTE Band 5_LAT	10M	QPSK	1	49	Front	15mm	Full	20525	836.5	22.84	23.80	1.247	-0.07	0.188	0.235
	LTE Band 5_LAT	10M	QPSK	1	49	Back	15mm	Full	20525	836.5	22.84	23.80	1.247	-0.12	0.265	0.331
	LTE Band 5_LAT	10M	QPSK	25	12	Front	15mm	Full	20525	836.5	21.91	22.80	1.227	0.13	0.156	0.191
	LTE Band 5_LAT	10M	QPSK	25	12	Back	15mm	Full	20525	836.5	21.91	22.80	1.227	-0.06	0.217	0.266
	LTE Band 26_UAT	15M	QPSK	1	0	Front	15mm	Full	26865	831.5	22.81	23.80	1.256	0.08	0.271	0.340
	LTE Band 26_UAT	15M	QPSK	1	0	Back	15mm	Full	26865	831.5	22.81	23.80	1.256	-0.01	0.284	0.357
	LTE Band 26_UAT	15M	QPSK	1	0	Back	15mm	Full	26765	821.5	22.76	23.80	1.271	0.06	0.302	0.384
	LTE Band 26_UAT	15M	QPSK	1	0	Back	15mm	Full	26915	836.5	22.73	23.80	1.279	-0.05	0.317	0.406
70	LTE Band 26_UAT	15M	QPSK	1	0	Back	15mm	Full	26965	841.5	22.78	23.80	1.265	-0.14	0.335	0.424
	LTE Band 26_UAT	15M	QPSK	36	20	Front	15mm	Full	26865	831.5	21.88	22.80	1.236	0.11	0.216	0.267
	LTE Band 26_UAT	15M	QPSK	36	20	Back	15mm	Full	26865	831.5	21.88	22.80	1.236	0.06	0.266	0.329
	LTE Band 26_LAT	15M	QPSK	1	0	Front	15mm	Full	26865	831.5	22.99	23.80	1.205	0.16	0.207	0.249
	LTE Band 26_LAT	15M	QPSK	1	0	Back	15mm	Full	26865	831.5	22.99	23.80	1.205	-0.05	0.279	0.336
	LTE Band 26_LAT	15M	QPSK	1	0	Back	15mm	Full	26765	821.5	22.96	23.80	1.213	-0.09	0.283	0.343
	LTE Band 26_LAT	15M	QPSK	1	0	Back	15mm	Full	26915	836.5	22.93	23.80	1.222	0.01	0.330	0.403
	LTE Band 26_LAT	15M	QPSK	1	0	Back	15mm	Full	26965	841.5	22.95	23.80	1.216	0.14	0.324	0.394
	LTE Band 26_LAT	15M	QPSK	36	20	Front	15mm	Full	26865	831.5	22.07	22.80	1.183	0.12	0.157	0.186
	LTE Band 26_LAT	15M	QPSK	36	20	Back	15mm	Full	26865	831.5	22.07	22.80	1.183	0.06	0.216	0.256
	LTE Band 66_UAT	20M	QPSK	1	0	Front	15mm	Full	132322	1745	20.75	22.00	1.334	-0.12	0.164	0.219
	LTE Band 66_UAT	20M	QPSK	1	0	Back	15mm	Full	132322	1745	20.75	22.00	1.334	-0.04	0.235	0.313
	LTE Band 66_UAT	20M	QPSK	1	0	Back	15mm	Full	132072	1720	20.61	22.00	1.377	0.07	0.137	0.189
	LTE Band 66_UAT	20M	QPSK	1	0	Back	15mm	Full	132572	1770	20.73	22.00	1.340	0.11	0.180	0.241
	LTE Band 66_UAT	20M	QPSK	50	24	Front	15mm	Full	132322	1745	19.84	21.00	1.306	0.01	0.131	0.171
	LTE Band 66_UAT	20M	QPSK	50	24	Back	15mm	Full	132322	1745	19.84	21.00	1.306	0.06	0.142	0.185
	LTE Band 66C_UAT	20M	QPSK	1	0	Back	15mm	Full	132572	1770	20.97	22.00	1.268	-0.09	0.239	0.303
	LTE Band 66_LAT	20M	QPSK	1	0	Front	15mm	Full	132322	1745	23.03	23.80	1.194	-0.01	0.488	0.583
	LTE Band 66_LAT	20M	QPSK	1	0	Back	15mm	Full	132322	1745	23.03	23.80	1.194	0.11	0.495	0.591
71	LTE Band 66_LAT	20M	QPSK	1	0	Back	15mm	Full	132072	1720	22.67	23.80	1.297	0.06	0.502	0.651
	LTE Band 66_LAT	20M	QPSK	1	0	Back	15mm	Full	132572	1770	23.90	23.80	0.977	0.05	0.428	0.418
	LTE Band 66_LAT	20M	QPSK	50	24	Front	15mm	Full	132322	1745	22.18	22.80	1.153	0.12	0.405	0.467
	LTE Band 66_LAT	20M	QPSK	50	24	Back	15mm	Full	132322	1745	22.18	22.80	1.153	0.02	0.413	0.476
	LTE Band 66C_LAT	20M	QPSK	1	0	Back	15mm	Full	132572	1770	22.75	23.80	1.274	0.08	0.485	0.618

Plot No.	Band	BW (MHz)	Modulation	RB Size	RB offset	Test Position	Gap (mm)	Power Reduction	Ch.	Freq. (MHz)	Average Power (dBm)	Tune-Up Limit (dBm)	Tune-up Scaling Factor	Power Drift (dB)	Measured 1g SAR (W/kg)	Reported 1g SAR (W/kg)
	LTE Band 25_UAT	20M	QPSK	1	0	Front	15mm	Full	26340	1880	21.23	22.00	1.194	-0.06	0.296	0.353
	LTE Band 25_UAT	20M	QPSK	1	0	Back	15mm	Full	26340	1880	21.23	22.00	1.194	0.02	0.387	0.462
	LTE Band 25_UAT	20M	QPSK	1	0	Back	15mm	Full	26140	1860	21.15	22.00	1.216	0.14	0.292	0.355
	LTE Band 25_UAT	20M	QPSK	1	0	Back	15mm	Full	26590	1905	21.19	22.00	1.205	0.11	0.269	0.324
	LTE Band 25_UAT	20M	QPSK	50	24	Front	15mm	Full	26340	1880	20.36	21.00	1.159	0.07	0.233	0.270
	LTE Band 25_UAT	20M	QPSK	50	24	Back	15mm	Full	26340	1880	20.36	21.00	1.159	0.02	0.230	0.267
	LTE Band 25_LAT	20M	QPSK	1	0	Front	15mm	Full	26340	1880	23.23	23.80	1.140	0.12	0.575	0.656
	LTE Band 25_LAT	20M	QPSK	1	0	Back	15mm	Full	26340	1880	23.23	23.80	1.140	-0.06	0.579	0.660
	LTE Band 25_LAT	20M	QPSK	1	0	Back	15mm	Full	26140	1860	23.13	23.80	1.167	0.08	0.564	0.658
72	LTE Band 25_LAT	20M	QPSK	1	0	Back	15mm	Full	26590	1905	23.21	23.80	1.146	0.01	0.584	0.669
	LTE Band 25_LAT	20M	QPSK	50	24	Front	15mm	Full	26340	1880	22.34	22.80	1.112	0.06	0.477	0.530
	LTE Band 25_LAT	20M	QPSK	50	24	Back	15mm	Full	26340	1880	22.34	22.80	1.112	-0.09	0.490	0.545
	LTE Band 30_UAT	10M	QPSK	1	0	Front	15mm	Full	27710	2310	21.08	21.80	1.180	0.17	0.346	0.408
	LTE Band 30_UAT	10M	QPSK	1	0	Back	15mm	Full	27710	2310	21.08	21.80	1.180	0.11	0.387	0.457
	LTE Band 30_UAT	10M	QPSK	25	12	Front	15mm	Full	27710	2310	20.09	20.80	1.178	-0.09	0.294	0.346
	LTE Band 30_UAT	10M	QPSK	25	12	Back	15mm	Full	27710	2310	20.09	20.80	1.178	-0.06	0.321	0.378
	LTE Band 30_LAT	10M	QPSK	1	0	Front	15mm	Full	27710	2310	23.15	23.80	1.161	0.16	0.580	0.674
73	LTE Band 30_LAT	10M	QPSK	1	0	Back	15mm	Full	27710	2310	23.15	23.80	1.161	0.03	0.643	0.747
	LTE Band 30_LAT	10M	QPSK	25	12	Front	15mm	Full	27710	2310	22.15	22.80	1.161	0.01	0.154	0.179
	LTE Band 30_LAT	10M	QPSK	25	12	Back	15mm	Full	27710	2310	22.15	22.80	1.161	0.14	0.163	0.189
	LTE Band 7_UAT	20M	QPSK	1	0	Front	15mm	Full	20850	2510	21.26	21.80	1.132	0.1	0.357	0.404
	LTE Band 7_UAT	20M	QPSK	1	0	Back	15mm	Full	20850	2510	21.26	21.80	1.132	-0.03	0.424	0.480
	LTE Band 7_UAT	20M	QPSK	1	0	Back	15mm	Full	21100	2535	21.16	21.80	1.159	-0.05	0.375	0.435
	LTE Band 7_UAT	20M	QPSK	1	0	Back	15mm	Full	21350	2560	21.09	21.80	1.178	0.12	0.363	0.427
	LTE Band 7_UAT	20M	QPSK	50	24	Front	15mm	Full	20850	2510	20.37	20.80	1.104	0.09	0.303	0.335
	LTE Band 7_UAT	20M	QPSK	50	24	Back	15mm	Full	20850	2510	20.37	20.80	1.104	0.02	0.345	0.381
	LTE Band 7_LAT	20M	QPSK	1	0	Front	15mm	Full	20850	2510	23.56	23.80	1.057	-0.06	0.581	0.614
	LTE Band 7_LAT	20M	QPSK	1	0	Back	15mm	Full	20850	2510	23.56	23.80	1.057	0.16	0.708	0.748
	LTE Band 7_LAT	20M	QPSK	1	0	Back	15mm	Full	21100	2535	23.46	23.80	1.081	0.05	0.679	0.734
74	LTE Band 7_LAT	20M	QPSK	1	0	Back	15mm	Full	21350	2560	23.37	23.80	1.104	-0.17	0.710	0.784
	LTE Band 7_LAT	20M	QPSK	50	24	Front	15mm	Full	20850	2510	22.67	22.80	1.030	-0.03	0.490	0.505
	LTE Band 7_LAT	20M	QPSK	50	24	Back	15mm	Full	20850	2510	22.67	22.80	1.030	0.02	0.532	0.548

<TDD LTE SAR>

Plot No.	Band	BW (MHz)	Modulation	RB Size	RB offset	Test Position	Gap (mm)	Power Reduction	Ch.	Freq. (MHz)	Average Power (dBm)	Tune-Up Limit (dBm)	Tune-up Scaling Factor	Duty Cycle %	Duty Cycle Scaling Factor	Power Drift (dB)	Measured 1g SAR (W/kg)	Reported 1g SAR (W/kg)
	LTE Band 41_UAT	20M	QPSK	1	49	Front	15mm	Full	40620	2593	21.47	21.80	1.079	62.9	1.006	0.06	0.203	0.220
	LTE Band 41_UAT	20M	QPSK	1	49	Back	15mm	Full	40620	2593	21.47	21.80	1.079	62.9	1.006	0.09	0.266	0.289
	LTE Band 41_UAT	20M	QPSK	1	49	Back	15mm	Full	39750	2506	21.43	21.80	1.089	62.9	1.006	0.02	0.350	0.383
	LTE Band 41_UAT	20M	QPSK	1	49	Back	15mm	Full	40185	2549.5	21.35	21.80	1.109	62.9	1.006	-0.01	0.243	0.271
	LTE Band 41_UAT	20M	QPSK	1	49	Back	15mm	Full	41055	2636.5	21.27	21.80	1.130	62.9	1.006	0.03	0.173	0.197
	LTE Band 41_UAT	20M	QPSK	1	49	Back	15mm	Full	41490	2680	21.15	21.80	1.161	62.9	1.006	0.01	0.140	0.164
	LTE Band 41_UAT	20M	QPSK	50	24	Front	15mm	Full	40620	2593	20.29	20.80	1.125	62.9	1.006	0.12	0.163	0.184
	LTE Band 41_UAT	20M	QPSK	50	24	Back	15mm	Full	40620	2593	20.29	20.80	1.125	62.9	1.006	-0.06	0.179	0.203
	LTE Band 41C_UAT	20M	QPSK	1	0	Back	15mm	Full	41055	2636.5	21.79	21.80	1.002	62.9	1.006	0.06	0.341	0.344
	LTE Band 41_LAT	20M	QPSK	1	49	Front	15mm	Full	40620	2593	23.60	23.80	1.047	62.9	1.006	0.03	0.016	0.017
	LTE Band 41_LAT	20M	QPSK	1	49	Back	15mm	Full	40620	2593	23.60	23.80	1.047	62.9	1.006	-0.01	0.206	0.217
75	LTE Band 41_LAT	20M	QPSK	1	49	Back	15mm	Full	40620	2593	23.60	23.80	1.047	62.9	1.006	-0.06	0.479	0.505
	LTE Band 41_LAT	20M	QPSK	1	49	Back	15mm	Full	39750	2506	23.58	23.80	1.052	62.9	1.006	0.12	0.175	0.185
	LTE Band 41_LAT	20M	QPSK	1	49	Back	15mm	Full	40185	2549.5	23.57	23.80	1.054	62.9	1.006	0.05	0.207	0.220
	LTE Band 41_LAT	20M	QPSK	1	49	Back	15mm	Full	41055	2636.5	23.45	23.80	1.084	62.9	1.006	-0.15	0.361	0.394
	LTE Band 41_LAT	20M	QPSK	1	49	Back	15mm	Full	41490	2680	23.30	23.80	1.122	62.9	1.006	0.11	0.234	0.264
	LTE Band 41_LAT	20M	QPSK	50	24	Front	15mm	Full	40620	2593	22.65	22.80	1.035	62.9	1.006	0.09	0.129	0.134
	LTE Band 41_LAT	20M	QPSK	50	24	Back	15mm	Full	40620	2593	22.65	22.80	1.035	62.9	1.006	-0.15	0.161	0.168
	LTE Band 41C_LAT	20M	QPSK	1	0	Back	15mm	Full	41490	2680	23.79	23.80	1.002	62.9	1.006	0.01	0.481	0.485
	LTE Band 41(HPUE)_UAT	20M	QPSK	1	49	Front	15mm	Full	40620	2593	23.84	24.30	1.112	42.9	1.009	0.01	0.255	0.286
	LTE Band 41(HPUE)_UAT	20M	QPSK	1	49	Back	15mm	Full	40620	2593	23.84	24.30	1.112	42.9	1.009	0.14	0.278	0.312
	LTE Band 41(HPUE)_UAT	20M	QPSK	1	49	Back	15mm	Full	39750	2506	23.73	24.30	1.140	42.9	1.009	-0.05	0.335	0.385
	LTE Band 41(HPUE)_UAT	20M	QPSK	1	49	Back	15mm	Full	40185	2549.5	23.77	24.30	1.130	42.9	1.009	-0.01	0.287	0.327
	LTE Band 41(HPUE)_UAT	20M	QPSK	1	49	Back	15mm	Full	41055	2636.5	23.65	24.30	1.161	42.9	1.009	0.03	0.250	0.293
	LTE Band 41(HPUE)_UAT	20M	QPSK	1	49	Back	15mm	Full	41490	2680	23.64	24.30	1.164	42.9	1.009	-0.14	0.220	0.258
	LTE Band 41(HPUE)_UAT	20M	QPSK	50	24	Front	15mm	Full	40620	2593	22.93	23.30	1.089	42.9	1.009	0.12	0.232	0.255
	LTE Band 41(HPUE)_UAT	20M	QPSK	50	24	Back	15mm	Full	40620	2593	22.93	23.30	1.089	42.9	1.009	0.08	0.250	0.275
	LTE Band 41C(HPUE)_UAT	20M	QPSK	1	0	Back	15mm	Full	40620	2593	23.15	24.30	1.303	42.9	1.009	0.02	0.271	0.356
	LTE Band 41(HPUE)_LAT	20M	QPSK	1	49	Front	15mm	Full	40620	2593	25.72	26.30	1.143	42.9	1.009	0.12	0.206	0.238
	LTE Band 41(HPUE)_LAT-	20M	QPSK	1	49	Back	15mm	Full	40620	2593	25.72	26.30	1.143	42.9	1.009	0.06	0.249	0.287
	LTE Band 41(HPUE)_LAT	20M	QPSK	1	49	Back	15mm	Full	39750	2506	25.65	26.30	1.161	42.9	1.009	-0.1	0.210	0.246
	LTE Band 41(HPUE)_LAT	20M	QPSK	1	49	Back	15mm	Full	40185	2549.5	25.59	26.30	1.178	42.9	1.009	0.02	0.183	0.217
	LTE Band 41(HPUE)_LAT	20M	QPSK	1	49	Back	15mm	Full	41055	2636.5	25.66	26.30	1.159	42.9	1.009	0.16	0.297	0.347
	LTE Band 41(HPUE)_LAT	20M	QPSK	1	49	Back	15mm	Full	41490	2680	25.56	26.30	1.186	42.9	1.009	-0.11	0.381	0.456
	LTE Band 41(HPUE)_LAT	20M	QPSK	50	24	Front	15mm	Full	40620	2593	24.89	25.30	1.099	42.9	1.009	0.14	0.205	0.227
	LTE Band 41(HPUE)_LAT	20M	QPSK	50	24	Back	15mm	Full	40620	2593	24.89	25.30	1.099	42.9	1.009	0.06	0.197	0.218
	LTE Band 41C(HPUE)_LAT	20M	QPSK	1	0	Back	15mm	Full	41055	2636.5	24.96	26.30	1.361	42.9	1.009	0.05	0.308	0.423
	LTE Band 48_UAT	20M	QPSK	1	49	Front	15mm	Full	55830	3609	22.93	23.80	1.222	62.9	1.006	-0.03	0.213	0.262
	LTE Band 48_UAT	20M	QPSK	1	49	Back	15mm	Full	55830	3609	22.93	23.80	1.222	62.9	1.006	0.02	0.310	0.381
	LTE Band 48_UAT	20M	QPSK	1	49	Back	15mm	Full	55340	3560	22.90	23.80	1.230	62.9	1.006	0.11	0.320	0.396
	LTE Band 48_UAT	20M	QPSK	1	49	Back	15mm	Full	56150	3641	22.68	23.80	1.294	62.9	1.006	-0.03	0.320	0.417
76	LTE Band 48_UAT	20M	QPSK	1	49	Back	15mm	Full	56640	3690	22.46	23.80	1.361	62.9	1.006	-0.03	0.330	0.452
	LTE Band 48_UAT	20M	QPSK	50	24	Front	15mm	Full	55830	3609	22.04	22.80	1.191	62.9	1.006	0.01	0.208	0.249
	LTE Band 48_UAT	20M	QPSK	50	24	Back	15mm	Full	55830	3609	22.04	22.80	1.191	62.9	1.006	0.12	0.277	0.332
	LTE Band 48C_UAT	20M	QPSK	1	0	Back	15mm	Full	56640	3690	22.92	23.80	1.225	62.9	1.006	0.05	0.311	0.383

<5G NR NSA SAR>

Plot No.	Band	BW (MHz)	Modulation	RB Size	RB offset	Mode	Test Position	Gap (mm)	Power Reduction	Ch.	Freq. (MHz)	Average Power (dBm)	Tune-Up Limit (dBm)	Tune-up Scaling Factor	Power Drift (dB)	Measured 1g SAR (W/kg)	Reported 1g SAR (W/kg)
	N2_UAT	20M	PI/2 BPSK	1	1	DFT-15	Front	15mm	Full	380000	1900	20.98	22.00	1.265	-0.14	0.225	0.285
	N2_UAT	20M	PI/2 BPSK	50	56	DFT-15	Front	15mm	Full	380000	1900	21.02	22.00	1.253	-0.17	0.259	0.325
	N2_UAT	20M	PI/2 BPSK	1	1	DFT-15	Back	15mm	Full	380000	1900	20.98	22.00	1.265	-0.16	0.253	0.320
	N2_UAT	20M	PI/2 BPSK	50	56	DFT-15	Back	15mm	Full	380000	1900	21.02	22.00	1.253	-0.03	0.263	0.330
	N2_UAT	20M	PI/2 BPSK	50	56	DFT-15	Back	15mm	Full	372000	1860	20.51	22.00	1.409	-0.09	0.223	0.314
	N2_UAT	20M	PI/2 BPSK	50	56	DFT-15	Back	15mm	Full	376000	1880	21.01	22.00	1.256	-0.15	0.251	0.315
	N2_LAT	20M	PI/2 BPSK	1	1	DFT-15	Front	15mm	Full	376000	1880	22.92	23.80	1.225	-0.1	0.376	0.461
	N2_LAT	20M	PI/2 BPSK	50	0	DFT-15	Front	15mm	Full	380000	1900	22.88	23.80	1.236	-0.08	0.424	0.524
	N2_LAT	20M	PI/2 BPSK	1	1	DFT-15	Back	15mm	Full	376000	1880	22.92	23.80	1.225	-0.15	0.436	0.533
	N2_LAT	20M	PI/2 BPSK	50	0	DFT-15	Back	15mm	Full	380000	1900	22.88	23.80	1.236	-0.16	0.439	0.543
	N2_LAT	20M	PI/2 BPSK	50	0	DFT-15	Back	15mm	Full	372000	1860	22.47	23.80	1.358	-0.06	0.359	0.487
77	N2_LAT	20M	PI/2 BPSK	50	0	DFT-15	Back	15mm	Full	376000	1880	22.83	23.80	1.250	-0.18	0.449	0.562
	N5_UAT	20M	PI/2 BPSK	1	1	DFT-15	Front	15mm	Full	166800	834	22.79	23.80	1.262	-0.07	0.142	0.180
	N5_UAT	20M	PI/2 BPSK	50	0	DFT-15	Front	15mm	Full	166800	834	22.70	23.80	1.288	-0.11	0.154	0.199
	N5_UAT	20M	PI/2 BPSK	1	1	DFT-15	Back	15mm	Full	166800	834	22.79	23.80	1.262	-0.16	0.171	0.216
	N5_UAT	20M	PI/2 BPSK	50	0	DFT-15	Back	15mm	Full	166800	834	22.70	23.80	1.288	-0.11	0.177	0.228
78	N5_UAT	20M	PI/2 BPSK	50	0	DFT-15	Back	15mm	Full	167300	836.5	22.68	23.80	1.294	-0.18	0.191	0.247
	N5_UAT	20M	PI/2 BPSK	50	0	DFT-15	Back	15mm	Full	167800	839	22.64	23.80	1.306	-0.09	0.177	0.231
	N5_LAT	20M	PI/2 BPSK	1	1	DFT-15	Front	15mm	Full	166800	834	23.31	23.80	1.119	-0.01	0.151	0.169
	N5_LAT	20M	PI/2 BPSK	50	0	DFT-15	Front	15mm	Full	166800	834	23.28	23.80	1.127	-0.03	0.148	0.167
	N5_LAT	20M	PI/2 BPSK	1	1	DFT-15	Back	15mm	Full	166800	834	23.31	23.80	1.119	-0.14	0.195	0.219
	N5_LAT	20M	PI/2 BPSK	50	0	DFT-15	Back	15mm	Full	166800	834	23.28	23.80	1.127	-0.09	0.194	0.218
	N5_LAT	20M	PI/2 BPSK	50	0	DFT-15	Back	15mm	Full	167300	836.5	23.21	23.80	1.146	-0.09	0.192	0.220
	N5_LAT	20M	PI/2 BPSK	50	0	DFT-15	Back	15mm	Full	167800	839	23.16	23.80	1.159	0.02	0.198	0.230
	N41_UAT	100M	PI/2 BPSK	1	271	DFT-30	Front	15mm	Full	518600	2593	22.41	23.00	1.146	0.16	0.247	0.283
	N41_UAT	100M	PI/2 BPSK	135	138	DFT-30	Front	15mm	Full	518600	2593	22.25	23.00	1.189	0.04	0.243	0.289
	N41_UAT	100M	PI/2 BPSK	1	271	DFT-30	Back	15mm	Full	518600	2593	22.41	23.00	1.146	0.1	0.313	0.359
	N41_UAT	100M	PI/2 BPSK	1	271	DFT-30	Back	15mm	Full	509200	2546	21.91	23.00	1.285	0.18	0.205	0.263
	N41_UAT	100M	PI/2 BPSK	1	271	DFT-30	Back	15mm	Full	528000	2640	22.35	23.00	1.161	-0.1	0.248	0.288
	N41_UAT	100M	PI/2 BPSK	135	138	DFT-30	Back	15mm	Full	518600	2593	22.25	23.00	1.189	0.06	0.274	0.326
	N41_LAT	100M	PI/2 BPSK	1	1	DFT-30	Front	15mm	Full	518600	2593	23.43	23.80	1.089	-0.04	0.358	0.390
	N41_LAT	100M	PI/2 BPSK	135	0	DFT-30	Front	15mm	Full	518600	2593	23.41	23.80	1.094	0.07	0.369	0.404
	N41_LAT	100M	PI/2 BPSK	1	1	DFT-30	Back	15mm	Full	518600	2593	23.43	23.80	1.089	-0.17	0.436	0.475
79	N41_LAT	100M	PI/2 BPSK	1	1	DFT-30	Back	15mm	Full	509200	2546	23.29	23.80	1.125	0.07	0.438	0.492
	N41_LAT	100M	PI/2 BPSK	1	1	DFT-30	Back	15mm	Full	528000	2640	23.35	23.80	1.109	-0.04	0.408	0.452
	N41_LAT	100M	PI/2 BPSK	135	0	DFT-30	Back	15mm	Full	518600	2593	23.41	23.80	1.094	-0.14	0.422	0.462

Plot No.	Band	BW (MHz)	Modulation	RB Size	RB offset	Mode	Test Position	Gap (mm)	Power Reduction	Ch.	Freq. (MHz)	Average Power (dBm)	Tune-Up Limit (dBm)	Tune-up Scaling Factor	Power Drift (dB)	Measured 1g SAR (W/kg)	Reported 1g SAR (W/kg)
	N66_UAT	20M	PI/2 BPSK	1	1	DFT-15	Front	15mm	Full	344000	1720	21.58	22.00	1.102	-0.14	0.255	0.281
	N66_UAT	20M	PI/2 BPSK	50	28	DFT-15	Front	15mm	Full	344000	1720	21.43	22.00	1.140	-0.14	0.264	0.301
	N66_UAT	20M	PI/2 BPSK	1	1	DFT-15	Back	15mm	Full	344000	1720	21.58	22.00	1.102	-0.19	0.263	0.289
	N66_UAT	20M	PI/2 BPSK	50	28	DFT-15	Back	15mm	Full	344000	1720	21.43	22.00	1.140	-0.11	0.269	0.307
	N66_UAT	20M	PI/2 BPSK	50	28	DFT-15	Back	15mm	Full	354000	1770	21.31	22.00	1.172	-0.03	0.325	0.381
	N66_UAT	20M	PI/2 BPSK	50	28	DFT-15	Back	15mm	Full	349000	1745	21.22	22.00	1.197	-0.04	0.283	0.339
	N66_LAT	20M	PI/2 BPSK	1	1	DFT-15	Front	15mm	Full	349000	1745	23.27	23.80	1.130	-0.11	0.329	0.372
	N66_LAT	20M	PI/2 BPSK	50	0	DFT-15	Front	15mm	Full	349000	1745	23.25	23.80	1.135	-0.1	0.333	0.378
	N66_LAT	20M	PI/2 BPSK	1	1	DFT-15	Back	15mm	Full	349000	1745	23.27	23.80	1.130	-0.03	0.335	0.379
80	N66_LAT	20M	PI/2 BPSK	1	1	DFT-15	Back	15mm	Full	344000	1720	23.22	23.80	1.143	-0.14	0.378	0.432
	N66_LAT	20M	PI/2 BPSK	1	1	DFT-15	Back	15mm	Full	354000	1770	23.07	23.80	1.183	-0.19	0.315	0.373
	N66_LAT	20M	PI/2 BPSK	50	0	DFT-15	Back	15mm	Full	349000	1745	23.25	23.80	1.135	-0.11	0.329	0.373
	N71_UAT	20M	PI/2 BPSK	1	1	DFT-15	Front	15mm	Full	137600	688	22.91	23.80	1.227	-0.13	0.088	0.108
	N71_UAT	20M	PI/2 BPSK	50	56	DFT-15	Front	15mm	Full	137600	688	22.76	23.80	1.271	-0.19	0.114	0.144
	N71_UAT	20M	PI/2 BPSK	1	1	DFT-15	Back	15mm	Full	137600	688	22.91	23.80	1.227	-0.18	0.123	0.150
	N71_UAT	20M	PI/2 BPSK	50	56	DFT-15	Back	15mm	Full	137600	688	22.76	23.80	1.271	0.02	0.142	0.181
	N71_UAT	20M	PI/2 BPSK	50	0	DFT-15	Back	15mm	Full	134600	673	22.75	23.80	1.274	-0.11	0.186	0.237
81	N71_UAT	20M	PI/2 BPSK	50	56	DFT-15	Back	15mm	Full	136100	680.5	22.73	23.80	1.279	-0.16	0.201	0.258
	N71_LAT	20M	PI/2 BPSK	1	1	DFT-15	Front	15mm	Full	136100	680.5	23.25	23.80	1.135	-0.11	0.154	0.175
	N71_LAT	20M	PI/2 BPSK	50	0	DFT-15	Front	15mm	Full	136100	680.5	23.23	23.80	1.140	-0.12	0.150	0.171
	N71_LAT	20M	PI/2 BPSK	1	1	DFT-15	Back	15mm	Full	136100	680.5	23.25	23.80	1.135	-0.04	0.201	0.228
	N71_LAT	20M	PI/2 BPSK	1	1	DFT-15	Back	15mm	Full	134600	673	23.09	23.80	1.178	-0.07	0.213	0.251
	N71_LAT	20M	PI/2 BPSK	1	1	DFT-15	Back	15mm	Full	137600	673	23.13	23.80	1.167	-0.05	0.207	0.242
	N71_LAT	20M	PI/2 BPSK	50	0	DFT-15	Back	15mm	Full	136100	680.5	23.23	23.80	1.140	-0.01	0.197	0.224

<WLAN SAR>

Plot No.	Band	Mode	Test Position	Gap (mm)	output Power state	Ch.	Freq. (MHz)	Average Power (dBm)	Tune-Up Limit (dBm)	Tune-up Scaling Factor	Duty Cycle %	Duty Cycle Scaling Factor	Power Drift (dB)	Measured 1g SAR (W/kg)	Reported 1g SAR (W/kg)
	WLAN2.4GHz	802.11b 1Mbps	Front	15mm	1	11	2462	16.91	18.91	1.585	100	1.000	0.19	0.066	0.104
	WLAN2.4GHz	802.11b 1Mbps	Back	15mm	1	11	2462	16.91	18.91	1.585	100	1.000	-0.1	0.396	0.628
	WLAN2.4GHz	802.11b 1Mbps	Back	15mm	1	1	2412	16.71	18.71	1.585	100	1.000	0.06	0.312	0.494
82	WLAN2.4GHz	802.11b 1Mbps	Back	15mm	1	6	2437	16.66	18.66	1.585	100	1.000	0.15	0.409	0.648
	WLAN2.4GHz	802.11b 1Mbps	Front	15mm	2	11	2462	15.89	17.89	1.585	100	1.000	0.05	0.054	0.086
	WLAN2.4GHz	802.11b 1Mbps	Back	15mm	2	11	2462	15.89	17.89	1.585	100	1.000	0.14	0.306	0.485
	WLAN2.4GHz	802.11b 1Mbps	Back	15mm	2	1	2412	15.69	17.69	1.585	100	1.000	-0.03	0.248	0.393
	WLAN2.4GHz	802.11b 1Mbps	Back	15mm	2	6	2437	15.57	17.57	1.585	100	1.000	0.12	0.345	0.547
	WLAN2.4GHz	802.11b 1Mbps	Front	15mm	3	11	2462	13.91	15.91	1.585	100	1.000	0.05	0.034	0.054
	WLAN2.4GHz	802.11b 1Mbps	Back	15mm	3	11	2462	13.91	15.91	1.585	100	1.000	0.14	0.194	0.307
	WLAN2.4GHz	802.11b 1Mbps	Back	15mm	3	1	2412	13.71	15.71	1.585	100	1.000	-0.03	0.157	0.249
	WLAN2.4GHz	802.11b 1Mbps	Back	15mm	3	6	2437	13.66	15.66	1.585	100	1.000	0.12	0.222	0.352

Plot No.	Band	Mode	Test Position	Gap (mm)	output Power state	Ch.	Freq. (MHz)	Average Power (dBm)	Tune-Up Limit (dBm)	Tune-up Scaling Factor	Duty Cycle %	Duty Cycle Scaling Factor	Power Drift (dB)	Measured 1g SAR (W/kg)	Reported 1g SAR (W/kg)
	WLAN5GHz	802.11n-HT40 MCS0	Front	15mm	1	54	5270	19.91	21.91	1.585	98.09	1.019	0.09	0.066	0.107
83	WLAN5GHz	802.11n-HT40 MCS0	Back	15mm	1	54	5270	19.91	21.91	1.585	98.09	1.019	0.02	0.541	0.874
	WLAN5GHz	802.11n-HT40 MCS0	Back	15mm	1	62	5310	19.80	21.80	1.585	98.09	1.019	0.06	0.480	0.775
	WLAN5GHz	802.11n-HT40 MCS0	Front	15mm	2	38	5190	18.71	20.71	1.585	98.08	1.020	-0.02	0.061	0.099
	WLAN5GHz	802.11n-HT40 MCS0	Back	15mm	2	38	5190	18.71	20.71	1.585	98.08	1.020	-0.11	0.431	0.697
	WLAN5GHz	802.11n-HT40 MCS0	Back	15mm	2	46	5230	18.70	20.70	1.585	98.08	1.020	0.16	0.409	0.661
	WLAN5GHz	802.11n-HT40 MCS0	Front	15mm	3	54	5270	16.83	18.83	1.585	98.09	1.019	-0.02	0.039	0.063
	WLAN5GHz	802.11n-HT40 MCS0	Back	15mm	3	54	5270	16.83	18.83	1.585	98.09	1.019	-0.11	0.274	0.443
	WLAN5GHz	802.11n-HT40 MCS0	Back	15mm	3	62	5310	16.82	18.82	1.585	98.09	1.019	0.16	0.260	0.420
	WLAN5GHz	802.11n-HT40 MCS0	Front	15mm	1	110	5550	17.44	19.44	1.585	98.09	1.019	0.11	0.011	0.018
	WLAN5GHz	802.11n-HT40 MCS0	Back	15mm	1	110	5550	17.44	19.44	1.585	98.09	1.019	-0.01	0.467	0.754
	WLAN5GHz	802.11n-HT40 MCS0	Back	15mm	1	102	5510	17.40	19.40	1.585	98.09	1.019	0.01	0.468	0.756
	WLAN5GHz	802.11n-HT40 MCS0	Back	15mm	1	126	5630	17.22	19.22	1.585	98.09	1.019	0.05	0.575	0.929
84	WLAN5GHz	802.11n-HT40 MCS0	Back	15mm	1	134	5670	17.01	19.01	1.585	98.09	1.019	0.03	0.602	0.972
	WLAN5GHz	802.11n-HT40 MCS0	Front	15mm	2	110	5550	15.38	17.38	1.585	98.08	1.020	-0.03	0.002	0.003
	WLAN5GHz	802.11n-HT40 MCS0	Back	15mm	2	110	5550	15.38	17.38	1.585	98.08	1.020	0.05	0.346	0.559
	WLAN5GHz	802.11n-HT40 MCS0	Back	15mm	2	102	5510	15.34	17.34	1.585	98.08	1.020	0.14	0.349	0.564
	WLAN5GHz	802.11n-HT40 MCS0	Back	15mm	2	126	5630	15.19	17.19	1.585	98.08	1.020	0.09	0.409	0.661
	WLAN5GHz	802.11n-HT40 MCS0	Back	15mm	2	134	5670	15.00	17.00	1.585	98.08	1.020	0.06	0.431	0.697
	WLAN5GHz	802.11n-HT40 MCS0	Back	15mm	2	142	5710	14.79	16.79	1.585	98.08	1.020	0.14	0.414	0.669
	WLAN5GHz	802.11n-HT40 MCS0	Front	15mm	3	110	5550	13.45	15.45	1.585	98.09	1.019	-0.03	0.001	0.002
	WLAN5GHz	802.11n-HT40 MCS0	Back	15mm	3	110	5550	13.45	15.45	1.585	98.09	1.019	0.05	0.218	0.352
	WLAN5GHz	802.11n-HT40 MCS0	Back	15mm	3	102	5510	13.42	15.42	1.585	98.09	1.019	0.14	0.220	0.355
	WLAN5GHz	802.11n-HT40 MCS0	Back	15mm	3	126	5630	13.25	15.25	1.585	98.09	1.019	0.09	0.257	0.415
	WLAN5GHz	802.11n-HT40 MCS0	Back	15mm	3	134	5670	13.01	15.01	1.585	98.09	1.019	0.06	0.268	0.433
	WLAN5GHz	802.11n-HT40 MCS0	Back	15mm	3	142	5710	12.85	14.85	1.585	98.09	1.019	0.14	0.260	0.420
	WLAN5GHz	802.11n-HT40 MCS0	Front	15mm	1	151	5755	17.52	19.52	1.585	98.09	1.019	0.03	0.001	0.002
	WLAN5GHz	802.11n-HT40 MCS0	Back	15mm	1	151	5755	17.52	19.52	1.585	98.09	1.019	0.06	0.520	0.840
85	WLAN5GHz	802.11n-HT40 MCS0	Back	15mm	1	159	5795	17.23	19.23	1.585	98.09	1.019	0.04	0.521	0.841
	WLAN5GHz	802.11n-HT40 MCS0	Front	15mm	2	151	5755	15.47	17.47	1.585	98.08	1.020	0.12	0.001	0.002
	WLAN5GHz	802.11n-HT40 MCS0	Back	15mm	2	151	5755	15.47	17.47	1.585	98.08	1.020	-0.08	0.282	0.456
	WLAN5GHz	802.11n-HT40 MCS0	Back	15mm	2	159	5795	15.17	17.17	1.585	98.08	1.020	0.01	0.281	0.454
	WLAN5GHz	802.11n-HT40 MCS0	Front	15mm	3	151	5755	15.52	17.52	1.585	98.09	1.019	0.12	0.001	0.002
	WLAN5GHz	802.11n-HT40 MCS0	Back	15mm	3	151	5755	15.52	17.52	1.585	98.09	1.019	-0.08	0.282	0.455
	WLAN5GHz	802.11n-HT40 MCS0	Back	15mm	3	159	5795	15.23	17.23	1.585	98.09	1.019	0.01	0.281	0.454

<Bluetooth SAR>

Plot No.	Band	Mode	Test Position	Gap (mm)	Antenna	Power Reduction	Ch.	Freq. (MHz)	Average Power (dBm)	Tune-Up Limit (dBm)	Tune-up Scaling Factor	Power Drift (dB)	Measured 1g SAR (W/kg)	Reported 1g SAR (W/kg)
	Bluetooth	DH5 1Mbps	Front	15mm	Chain 0	Full	39	2441	14.07	16.07	1.585	0.06	0.005	0.008
	Bluetooth	DH5 1Mbps	Back	15mm	Chain 0	Full	39	2441	14.07	16.07	1.585	0.03	0.042	0.067
	Bluetooth	DH5 1Mbps	Back	15mm	Chain 0	Full	0	2402	13.05	15.05	1.585	-0.02	0.036	0.057
	Bluetooth	DH5 1Mbps	Back	15mm	Chain 0	Full	78	2480	12.10	14.10	1.585	0.11	0.039	0.062
	Bluetooth	DH5 1Mbps	Front	15mm	Chain 1	Full	39	2441	8.52	10.52	1.585	-0.06	0.007	0.011
86	Bluetooth	DH5 1Mbps	Back	15mm	Chain 1	Full	39	2441	8.52	10.52	1.585	-0.14	0.048	0.076
	Bluetooth	DH5 1Mbps	Back	15mm	Chain 1	Full	0	2402	7.72	9.72	1.585	0.14	0.033	0.052
	Bluetooth	DH5 1Mbps	Back	15mm	Chain 1	Full	78	2480	6.84	8.84	1.585	0.11	0.037	0.059

17.4 Product Specific SAR

<WCDMA SAR>

Plot No.	Band	Mode	Test Position	Gap (mm)	Power Reduction	Ch.	Freq. (MHz)	Average Power (dBm)	Tune-Up Limit (dBm)	Tune-up Scaling Factor	Power Drift (dB)	Measured 10g SAR (W/kg)	Reported 10g SAR (W/kg)
87	WCDMA IV_LAT	RMC 12.2Kbps	Back	0mm	Reduced	1413	1732.6	19.25	19.80	1.135	0.18	1.670	1.895
	WCDMA IV_LAT	RMC 12.2Kbps	Bottom Side	0mm	Reduced	1413	1732.6	19.25	19.80	1.135	0.07	1.150	1.305
	WCDMA IV_LAT	RMC 12.2Kbps	Back	0mm	Reduced	1312	1712.4	19.06	19.80	1.186	0.07	1.530	1.814
	WCDMA IV_LAT	RMC 12.2Kbps	Back	0mm	Reduced	1513	1752.6	19.24	19.80	1.138	0.1	1.630	1.854
	WCDMA II_LAT	RMC 12.2Kbps	Front	0mm	Reduced	9400	1880	18.68	19.30	1.153	-0.08	1.130	1.303
88	WCDMA II_LAT	RMC 12.2Kbps	Back	0mm	Reduced	9400	1880	18.68	19.30	1.153	0.18	1.430	1.649
	WCDMA II_LAT	RMC 12.2Kbps	Bottom Side	0mm	Reduced	9400	1880	18.68	19.30	1.153	-0.12	1.100	1.269
	WCDMA II_LAT	RMC 12.2Kbps	Back	0mm	Reduced	9262	1852.4	18.52	19.30	1.197	0.04	1.170	1.400
	WCDMA II_LAT	RMC 12.2Kbps	Back	0mm	Reduced	9538	1907.6	18.64	19.30	1.164	-0.08	1.330	1.548

<CDMA SAR>

Plot No.	Band	Mode	Test Position	Gap (mm)	Power Reduction	Ch.	Freq. (MHz)	Average Power (dBm)	Tune-Up Limit (dBm)	Tune-up Scaling Factor	Power Drift (dB)	Measured 10g SAR (W/kg)	Reported 10g SAR (W/kg)
	CDMA2000 BC1_LAT	RTAP 153.6Kbps	Back	0mm	Reduced	600	1880	19.89	20.80	1.233	0.19	1.660	2.047
	CDMA2000 BC1_LAT	RTAP 153.6Kbps	Bottom Side	0mm	Reduced	600	1880	19.89	20.80	1.233	-0.02	1.030	1.270
	CDMA2000 BC1_LAT	RTAP 153.6Kbps	Back	0mm	Reduced	25	1851.25	19.63	20.80	1.309	-0.12	1.510	1.977
89	CDMA2000 BC1_LAT	RTAP 153.6Kbps	Back	0mm	Reduced	1175	1908.75	19.78	20.80	1.265	0.13	1.670	2.112

<FDD LTE SAR>

Plot No.	Band	BW (MHz)	Modulation	RB Size	RB offset	Test Position	Gap (mm)	Power Reduction	Ch.	Freq. (MHz)	Average Power (dBm)	Tune-Up Limit (dBm)	Tune-up Scaling Factor	Power Drift (dB)	Measured 10g SAR (W/kg)	Reported 10g SAR (W/kg)
90	LTE Band 26_UAT	15M	QPSK	1	0	Left Side	0mm	Reduced	26865	831.5	22.81	23.80	1.256	0.09	1.140	1.432
	LTE Band 26_UAT	15M	QPSK	1	0	Left Side	0mm	Reduced	26765	821.5	22.76	23.80	1.271	-0.18	0.873	1.109
	LTE Band 26_UAT	15M	QPSK	1	0	Left Side	0mm	Reduced	26915	836.5	22.73	23.80	1.279	0.05	1.080	1.382
	LTE Band 26_UAT	15M	QPSK	1	0	Left Side	0mm	Reduced	26965	841.5	22.78	23.80	1.265	0.09	0.767	0.970
	LTE Band 26_UAT	15M	QPSK	36	20	Left Side	0mm	Reduced	26865	831.5	21.88	22.80	1.236	0.12	0.928	1.147
	LTE Band 66_LAT	20M	QPSK	1	0	Back	0mm	Reduced	132322	1745	19.11	19.80	1.172	0.15	1.640	1.922
	LTE Band 66_LAT	20M	QPSK	1	0	Bottom Side	0mm	Reduced	132322	1745	19.11	19.80	1.172	-0.14	0.771	0.904
	LTE Band 66_LAT	20M	QPSK	50	24	Back	0mm	Reduced	132322	1745	19.09	19.80	1.178	-0.07	1.780	2.096
	LTE Band 66_LAT	20M	QPSK	50	24	Bottom Side	0mm	Reduced	132322	1745	19.09	19.80	1.178	0.07	0.805	0.948
	LTE Band 66_LAT	20M	QPSK	50	24	Back	0mm	Reduced	132072	1720	19.05	19.80	1.189	0.13	1.780	2.116
91	LTE Band 66_LAT	20M	QPSK	50	24	Back	0mm	Reduced	132572	1770	19.08	19.80	1.180	0.15	1.800	2.125
	LTE Band 66C_LAT	20M	QPSK	1	0	Back	0mm	Reduced	132572	1770	19.46	19.80	1.081	0.01	1.770	1.914
	LTE Band 25_UAT	20M	QPSK	1	0	Front	0mm	Full	26340	1880	21.23	22.00	1.194	0.03	1.740	2.078
	LTE Band 25_UAT	20M	QPSK	1	0	Back	0mm	Reduced	26340	1880	19.13	20.00	1.222	0.17	0.856	1.046
	LTE Band 25_UAT	20M	QPSK	1	0	Top Side	0mm	Full	26340	1880	21.23	22.00	1.194	-0.1	2.090	2.495
92	LTE Band 25_UAT	20M	QPSK	1	0	Top Side	0mm	Full	26140	1860	21.15	22.00	1.216	-0.12	2.130	2.590
	LTE Band 25_UAT	20M	QPSK	1	0	Top Side	0mm	Full	26590	1905	21.19	22.00	1.205	0.04	1.830	2.205
	LTE Band 25_UAT	20M	QPSK	50	24	Front	0mm	Full	26340	1880	20.36	21.00	1.159	-0.14	1.630	1.889
	LTE Band 25_UAT	20M	QPSK	50	24	Back	0mm	Reduced	26340	1880	19.07	20.00	1.239	0.11	0.841	1.042
	LTE Band 25_UAT	20M	QPSK	50	24	Top Side	0mm	Full	26340	1880	20.36	21.00	1.159	-0.1	1.550	1.796
	LTE Band 25_LAT	20M	QPSK	1	0	Front	0mm	Reduced	26340	1880	18.28	18.80	1.127	0.13	1.200	1.353
	LTE Band 25_LAT	20M	QPSK	1	0	Back	0mm	Reduced	26340	1880	18.28	18.80	1.127	0.16	1.720	1.939
	LTE Band 25_LAT	20M	QPSK	1	0	Bottom Side	0mm	Reduced	26340	1880	18.28	18.80	1.127	-0.1	1.100	1.240
	LTE Band 25_LAT	20M	QPSK	50	24	Front	0mm	Reduced	26340	1880	18.25	18.80	1.135	-0.17	1.230	1.396
	LTE Band 25_LAT	20M	QPSK	50	24	Back	0mm	Reduced	26340	1880	18.25	18.80	1.135	0	1.750	1.986
	LTE Band 25_LAT	20M	QPSK	50	24	Bottom Side	0mm	Reduced	26340	1880	18.25	18.80	1.135	0.05	1.150	1.305
	LTE Band 25_LAT	20M	QPSK	50	24	Back	0mm	Reduced	26140	1860	18.20	18.80	1.148	-0.04	1.760	2.021
	LTE Band 25_LAT	20M	QPSK	50	24	Back	0mm	Reduced	26590	1905	18.20	18.80	1.148	-0.07	1.720	1.975

Plot No.	Band	BW (MHz)	Modulation	RB Size	RB offset	Test Position	Gap (mm)	Power Reduction	Ch.	Freq. (MHz)	Average Power (dBm)	Tune-Up Limit (dBm)	Tune-up Scaling Factor	Power Drift (dB)	Measured 10g SAR (W/kg)	Reported 10g SAR (W/kg)
	LTE Band 30_UAT	10M	QPSK	1	0	Back	0mm	Reduced	27710	2310	20.30	20.80	1.122	0.18	0.933	1.047
93	LTE Band 30_UAT	10M	QPSK	1	0	Top Side	0mm	Full	27710	2310	21.08	21.80	1.180	0.13	1.560	1.841
	LTE Band 30_UAT	10M	QPSK	25	12	Back	0mm	Reduced	27710	2310	20.31	20.80	1.119	-0.06	0.929	1.040
	LTE Band 30_UAT	10M	QPSK	25	12	Top Side	0mm	Full	27710	2310	20.09	20.80	1.178	-0.01	1.320	1.554
	LTE Band 7_UAT	20M	QPSK	1	0	Front	0mm	Full	20850	2510	21.26	21.80	1.132	-0.02	1.750	1.982
	LTE Band 7_UAT	20M	QPSK	1	0	Back	0mm	Reduced	20850	2510	18.42	18.80	1.091	-0.18	0.749	0.817
	LTE Band 7_UAT	20M	QPSK	1	0	Top Side	0mm	Full	20850	2510	21.26	21.80	1.132	-0.08	1.520	1.721
	LTE Band 7_UAT	20M	QPSK	1	0	Front	0mm	Full	21100	2535	21.16	21.80	1.159	-0.15	1.630	1.889
	LTE Band 7_UAT	20M	QPSK	1	0	Front	0mm	Full	21350	2560	21.09	21.80	1.178	-0.08	1.580	1.861
	LTE Band 7_UAT	20M	QPSK	50	24	Front	0mm	Full	20850	2510	20.37	20.80	1.104	0.07	1.450	1.601
	LTE Band 7_UAT	20M	QPSK	50	24	Back	0mm	Reduced	20850	2510	18.51	18.80	1.069	0.07	0.717	0.767
	LTE Band 7_UAT	20M	QPSK	50	24	Top Side	0mm	Full	20850	2510	20.37	20.80	1.104	0.1	1.300	1.435
	LTE Band 7_LAT	20M	QPSK	1	0	Front	0mm	Reduced	20850	2510	18.50	18.80	1.072	-0.16	1.410	1.511
	LTE Band 7_LAT	20M	QPSK	1	0	Back	0mm	Reduced	20850	2510	18.50	18.80	1.072	0.08	1.770	1.897
	LTE Band 7_LAT	20M	QPSK	1	0	Bottom Side	0mm	Reduced	20850	2510	18.50	18.80	1.072	-0.03	0.643	0.689
	LTE Band 7_LAT	20M	QPSK	50	24	Front	0mm	Reduced	20850	2510	18.47	18.80	1.079	0.18	1.440	1.554
	LTE Band 7_LAT	20M	QPSK	50	24	Back	0mm	Reduced	20850	2510	18.47	18.80	1.079	-0.06	1.830	1.974
94	LTE Band 7_LAT	20M	QPSK	50	24	Back	0mm	Reduced	20850	2510	18.47	18.80	1.079	0.14	2.120	2.287
	LTE Band 7_LAT	20M	QPSK	50	24	Bottom Side	0mm	Reduced	20850	2510	18.47	18.80	1.079	-0.05	0.639	0.689
	LTE Band 7_LAT	20M	QPSK	50	24	Back	0mm	Reduced	21100	2535	18.42	18.80	1.091	0.12	1.740	1.899
	LTE Band 7_LAT	20M	QPSK	50	24	Back	0mm	Reduced	21350	2560	18.45	18.80	1.084	-0.03	1.650	1.788

<TDD LTE SAR>

Plot No.	Band	BW (MHz)	Modulation	RB Size	RB offset	Test Position	Gap (mm)	Power Reduction	Ch.	Freq. (MHz)	Average Power (dBm)	Tune-Up Limit (dBm)	Tune-up Scaling Factor	Duty Cycle %	Duty Cycle Scaling Factor	Power Drift (dB)	Measured 10g SAR (W/kg)	Reported 10g SAR (W/kg)
	LTE Band 41_UAT	20M	QPSK	1	49	Top Side	0mm	Full	40620	2593	21.47	21.80	1.079	62.9	1.006	-0.17	1.340	1.454
	LTE Band 41_UAT	20M	QPSK	1	49	Top Side	0mm	Full	39750	2506	21.43	21.80	1.089	62.9	1.006	-0.16	1.330	1.457
	LTE Band 41_UAT	20M	QPSK	1	49	Top Side	0mm	Full	40185	2549.5	21.35	21.80	1.109	62.9	1.006	-0.12	1.380	1.540
	LTE Band 41_UAT	20M	QPSK	1	49	Top Side	0mm	Full	41055	2636.5	21.27	21.80	1.130	62.9	1.006	-0.19	1.520	1.728
	LTE Band 41_UAT	20M	QPSK	1	49	Top Side	0mm	Full	41490	2680	21.15	21.80	1.161	62.9	1.006	-0.07	1.541	1.801
	LTE Band 41_UAT	20M	QPSK	50	24	Top Side	0mm	Full	40620	2593	20.29	20.80	1.125	62.9	1.006	-0.04	1.220	1.380
	LTE Band 41_UAT	20M	QPSK	50	24	Top Side	0mm	Full	39750	2506	20.13	20.80	1.167	62.9	1.006	0.01	1.120	1.315
	LTE Band 41_UAT	20M	QPSK	50	24	Top Side	0mm	Full	40185	2549.5	20.12	20.80	1.169	62.9	1.006	0.03	1.130	1.329
	LTE Band 41_UAT	20M	QPSK	50	24	Top Side	0mm	Full	41055	2636.5	20.10	20.80	1.175	62.9	1.006	-0.17	1.290	1.525
	LTE Band 41_UAT	20M	QPSK	50	24	Top Side	0mm	Full	41490	2680	20.05	20.80	1.189	62.9	1.006	-0.17	1.330	1.590
	LTE Band 41C_UAT	20M	QPSK	1	0	Top Side	0mm	Full	41055	2636.5	21.79	21.80	1.002	62.9	1.006	0.07	1.960	1.976
	LTE Band 41(HPUE)_UAT	20M	QPSK	1	49	Top Side	0mm	Full	40620	2593	23.84	24.30	1.112	42.9	1.009	0.06	1.652	1.853
	LTE Band 41(HPUE)_UAT	20M	QPSK	1	49	Top Side	0mm	Full	39750	2506	23.73	24.30	1.140	42.9	1.009	-0.09	1.596	1.836
	LTE Band 41(HPUE)_UAT	20M	QPSK	1	49	Top Side	0mm	Full	40185	2549.5	23.77	24.30	1.130	42.9	1.009	0.05	1.589	1.811
	LTE Band 41(HPUE)_UAT	20M	QPSK	1	49	Top Side	0mm	Full	41055	2636.5	23.65	24.30	1.161	42.9	1.009	0.16	1.690	1.981
95	LTE Band 41(HPUE)_UAT	20M	QPSK	1	49	Top Side	0mm	Full	41490	2680	23.64	24.30	1.164	42.9	1.009	0.09	1.698	1.994
	LTE Band 41(HPUE)_UAT	20M	QPSK	50	24	Top Side	0mm	Full	40620	2593	22.93	23.30	1.089	42.9	1.009	-0.14	1.491	1.638
	LTE Band 41(HPUE)_UAT	20M	QPSK	50	50	Top Side	0mm	Full	39750	2506	22.79	23.30	1.125	42.9	1.009	0.06	1.384	1.570
	LTE Band 41(HPUE)_UAT	20M	QPSK	50	50	Top Side	0mm	Full	40185	2549.5	22.88	23.30	1.102	42.9	1.009	0.08	1.444	1.605
	LTE Band 41(HPUE)_UAT	20M	QPSK	50	50	Top Side	0mm	Full	41055	2636.5	22.72	23.30	1.143	42.9	1.009	0	1.369	1.579
	LTE Band 41(HPUE)_UAT	20M	QPSK	50	50	Top Side	0mm	Full	41490	2680	22.63	23.30	1.167	42.9	1.009	0.04	1.453	1.711
	LTE Band 41C(HPUE)_UAT	20M	QPSK	1	0	Top Side	0mm	Full	40620	2593	23.15	24.30	1.303	42.9	1.009	0.14	0.788	1.036
	LTE Band 48_UAT	20M	QPSK	1	49	Back	0mm	Reduced	55830	3609	19.27	19.80	1.130	62.9	1.006	0.09	0.630	0.716
	LTE Band 48_UAT	20M	QPSK	1	49	Top Side	0mm	Full	55830	3609	22.93	23.80	1.222	62.9	1.006	0.01	1.380	1.696
	LTE Band 48_UAT	20M	QPSK	1	49	Top Side	0mm	Full	55340	3560	22.90	23.80	1.230	62.9	1.006	0.11	1.370	1.696
	LTE Band 48_UAT	20M	QPSK	1	49	Top Side	0mm	Full	56150	3641	22.68	23.80	1.294	62.9	1.006	0.06	1.420	1.849
96	LTE Band 48_UAT	20M	QPSK	1	49	Top Side	0mm	Full	56640	3690	22.46	23.80	1.361	62.9	1.006	0.11	1.450	1.986
	LTE Band 48_UAT	20M	QPSK	50	24	Back	0mm	Reduced	55830	3609	19.26	19.80	1.132	62.9	1.006	-0.1	0.610	0.695
	LTE Band 48_UAT	20M	QPSK	50	24	Top Side	0mm	Full	55830	3609	22.04	22.80	1.191	62.9	1.006	0.09	1.280	1.534
	LTE Band 48C_UAT	20M	QPSK	1	0	Top Side	0mm	Full	56640	3690	22.92	23.80	1.225	62.9	1.006	-0.03	1.560	1.922

<WLAN SAR>

Plot No.	Band	Mode	Test Position	Gap (mm)	output Power state	Ch.	Freq. (MHz)	Average Power (dBm)	Tune-Up Limit (dBm)	Tune-up Scaling Factor	Duty Cycle %	Duty Cycle Scaling Factor	Power Drift (dB)	Measured 10g SAR (W/kg)	Reported 10g SAR (W/kg)
	WLAN2.4GHz	802.11b 1Mbps	Front	0mm	1	11	2462	16.91	18.91	1.585	100	1.000	0.04	0.376	0.596
97	WLAN2.4GHz	802.11b 1Mbps	Back	0mm	1	11	2462	16.91	18.91	1.585	100	1.000	-0.09	1.410	2.235
	WLAN2.4GHz	802.11b 1Mbps	Right Side	0mm	1	11	2462	16.91	18.91	1.585	100	1.000	0.1	0.640	1.014
	WLAN2.4GHz	802.11b 1Mbps	Top Side	0mm	1	11	2462	16.91	18.91	1.585	100	1.000	-0.06	0.114	0.181
	WLAN2.4GHz	802.11b 1Mbps	Back	0mm	1	1	2412	16.71	18.71	1.585	100	1.000	-0.13	1.120	1.775
	WLAN2.4GHz	802.11b 1Mbps	Back	0mm	1	6	2437	16.66	18.66	1.585	100	1.000	0.19	1.150	1.823
	WLAN2.4GHz	802.11b 1Mbps	Front	0mm	2	11	2462	15.89	17.89	1.585	100	1.000	0.08	0.375	0.594
	WLAN2.4GHz	802.11b 1Mbps	Back	0mm	2	11	2462	15.89	17.89	1.585	100	1.000	-0.01	0.838	1.328
	WLAN2.4GHz	802.11b 1Mbps	Right Side	0mm	2	11	2462	15.89	17.89	1.585	100	1.000	0.03	0.566	0.897
	WLAN2.4GHz	802.11b 1Mbps	Top Side	0mm	2	11	2462	15.89	17.89	1.585	100	1.000	0.13	0.099	0.157
	WLAN2.4GHz	802.11b 1Mbps	Back	0mm	2	1	2412	15.69	17.69	1.585	100	1.000	0.04	0.677	1.073
	WLAN2.4GHz	802.11b 1Mbps	Back	0mm	2	6	2437	15.57	17.57	1.585	100	1.000	-0.07	0.694	1.100
	WLAN2.4GHz	802.11b 1Mbps	Front	0mm	3	11	2462	12.91	14.91	1.585	100	1.000	0.1	0.189	0.300
	WLAN2.4GHz	802.11b 1Mbps	Back	0mm	3	11	2462	12.91	14.91	1.585	100	1.000	0.19	0.422	0.669
	WLAN2.4GHz	802.11b 1Mbps	Right Side	0mm	3	11	2462	12.91	14.91	1.585	100	1.000	0.17	0.285	0.452
	WLAN2.4GHz	802.11b 1Mbps	Top Side	0mm	3	11	2462	12.91	14.91	1.585	100	1.000	-0.1	0.050	0.079
	WLAN2.4GHz	802.11b 1Mbps	Back	0mm	3	1	2412	12.71	14.71	1.585	100	1.000	-0.13	0.341	0.540
	WLAN2.4GHz	802.11b 1Mbps	Back	0mm	3	6	2437	12.66	14.66	1.585	100	1.000	0.14	0.355	0.563
	WLAN5GHz	802.11n-HT40 MCS0	Front	0mm	1	38	5190	19.72	21.72	1.585	98.08	1.020	0.09	0.152	0.246
	WLAN5GHz	802.11n-HT40 MCS0	Back	0mm	1	38	5190	19.72	21.72	1.585	98.08	1.020	0.06	1.260	2.037
	WLAN5GHz	802.11n-HT40 MCS0	Right Side	0mm	1	38	5190	19.72	21.72	1.585	98.08	1.020	0.17	0.409	0.661
	WLAN5GHz	802.11n-HT40 MCS0	Top Side	0mm	1	38	5190	19.72	21.72	1.585	98.08	1.020	-0.17	0.297	0.480
98	WLAN5GHz	802.11n-HT40 MCS0	Back	0mm	1	46	5230	19.71	21.71	1.585	98.08	1.020	0	1.290	2.085
	WLAN5GHz	802.11n-HT40 MCS0	Front	0mm	2	38	5190	18.71	20.71	1.585	98.08	1.020	0.06	0.189	0.306
	WLAN5GHz	802.11n-HT40 MCS0	Back	0mm	2	38	5190	18.71	20.71	1.585	98.08	1.020	-0.04	0.742	1.200
	WLAN5GHz	802.11n-HT40 MCS0	Right Side	0mm	2	38	5190	18.71	20.71	1.585	98.08	1.020	0.13	0.513	0.829
	WLAN5GHz	802.11n-HT40 MCS0	Top Side	0mm	2	38	5190	18.71	20.71	1.585	98.08	1.020	-0.01	0.268	0.433
	WLAN5GHz	802.11n-HT40 MCS0	Back	0mm	2	46	5230	18.70	20.70	1.585	98.08	1.020	0.08	1.029	1.663
	WLAN5GHz	802.11n-HT40 MCS0	Front	0mm	3	38	5190	15.76	17.76	1.585	98.08	1.020	0.05	0.094	0.152
	WLAN5GHz	802.11n-HT40 MCS0	Back	0mm	3	38	5190	15.76	17.76	1.585	98.08	1.020	0.13	0.369	0.597
	WLAN5GHz	802.11n-HT40 MCS0	Right Side	0mm	3	38	5190	15.76	17.76	1.585	98.08	1.020	0.18	0.255	0.412
	WLAN5GHz	802.11n-HT40 MCS0	Top Side	0mm	3	38	5190	15.76	17.76	1.585	98.08	1.020	-0.05	0.133	0.215
	WLAN5GHz	802.11n-HT40 MCS0	Back	0mm	3	46	5230	15.74	17.74	1.585	98.08	1.020	-0.07	0.510	0.824
	WLAN5GHz	802.11n-HT40 MCS0	Front	0mm	1	54	5270	19.91	21.91	1.585	98.08	1.020	-0.1	0.230	0.372
99	WLAN5GHz	802.11n-HT40 MCS0	Back	0mm	1	54	5270	19.91	21.91	1.585	98.08	1.020	0.12	1.460	2.360
	WLAN5GHz	802.11n-HT40 MCS0	Right Side	0mm	1	54	5270	19.91	21.91	1.585	98.08	1.020	-0.13	0.635	1.027
	WLAN5GHz	802.11n-HT40 MCS0	Top Side	0mm	1	54	5270	19.91	21.91	1.585	98.08	1.020	-0.03	0.530	0.857
	WLAN5GHz	802.11n-HT40 MCS0	Back	0mm	1	62	5310	19.80	21.80	1.585	98.08	1.020	-0.11	1.440	2.328
	WLAN5GHz	802.11n-HT40 MCS0	Front	0mm	2	54	5270	17.81	19.81	1.585	98.08	1.020	0.11	0.158	0.255
	WLAN5GHz	802.11n-HT40 MCS0	Back	0mm	2	54	5270	17.81	19.81	1.585	98.08	1.020	0.01	0.844	1.364
	WLAN5GHz	802.11n-HT40 MCS0	Right Side	0mm	2	54	5270	17.81	19.81	1.585	98.08	1.020	0.18	0.551	0.891
	WLAN5GHz	802.11n-HT40 MCS0	Top Side	0mm	2	54	5270	17.81	19.81	1.585	98.08	1.020	-0.14	0.238	0.385
	WLAN5GHz	802.11n-HT40 MCS0	Back	0mm	2	62	5310	17.80	19.80	1.585	98.08	1.020	-0.03	0.872	1.410
	WLAN5GHz	802.11n-HT40 MCS0	Front	0mm	3	54	5270	15.83	17.83	1.585	98.08	1.020	0.06	0.098	0.158
	WLAN5GHz	802.11n-HT40 MCS0	Back	0mm	3	54	5270	15.83	17.83	1.585	98.08	1.020	0.06	0.524	0.847
	WLAN5GHz	802.11n-HT40 MCS0	Right Side	0mm	3	54	5270	15.83	17.83	1.585	98.08	1.020	-0.02	0.342	0.553
	WLAN5GHz	802.11n-HT40 MCS0	Top Side	0mm	3	54	5270	15.83	17.83	1.585	98.08	1.020	-0.15	0.148	0.239
	WLAN5GHz	802.11n-HT40 MCS0	Back	0mm	3	62	5310	15.82	17.82	1.585	98.08	1.020	-0.17	0.542	0.876

Plot No.	Band	Mode	Test Position	Gap (mm)	output Power state	Ch.	Freq. (MHz)	Average Power (dBm)	Tune-Up Limit (dBm)	Tune-up Scaling Factor	Duty Cycle %	Duty Cycle Scaling Factor	Power Drift (dB)	Measured 10g SAR (W/kg)	Reported 10g SAR (W/kg)
	WLAN5GHz	802.11n-HT40 MCS0	Front	0mm	1	110	5550	17.44	19.44	1.585	98.08	1.020	0.11	0.108	0.175
	WLAN5GHz	802.11n-HT40 MCS0	Back	0mm	1	110	5550	17.44	19.44	1.585	98.08	1.020	0.07	1.190	1.924
	WLAN5GHz	802.11n-HT40 MCS0	Right Side	0mm	1	110	5550	17.44	19.44	1.585	98.08	1.020	-0.12	0.261	0.422
	WLAN5GHz	802.11n-HT40 MCS0	Top Side	0mm	1	110	5550	17.44	19.44	1.585	98.08	1.020	0.16	0.248	0.401
	WLAN5GHz	802.11n-HT40 MCS0	Back	0mm	1	102	5510	17.40	19.40	1.585	98.08	1.020	0.18	1.060	1.714
	WLAN5GHz	802.11n-HT40 MCS0	Back	0mm	1	126	5630	17.22	19.22	1.585	98.08	1.020	0.05	1.210	1.956
100	WLAN5GHz	802.11n-HT40 MCS0	Back	0mm	1	134	5670	17.01	19.01	1.585	98.08	1.020	0	1.550	2.506
	WLAN5GHz	802.11n-HT40 MCS0	Back	0mm	1	142	5710	16.83	18.83	1.585	98.08	1.020	-0.05	1.530	2.473
	WLAN5GHz	802.11n-HT40 MCS0	Front	0mm	2	110	5550	15.38	17.38	1.585	98.08	1.020	0.06	0.660	1.067
	WLAN5GHz	802.11n-HT40 MCS0	Back	0mm	2	110	5550	15.38	17.38	1.585	98.08	1.020	0.08	0.902	1.458
	WLAN5GHz	802.11n-HT40 MCS0	Right Side	0mm	2	110	5550	15.38	17.38	1.585	98.08	1.020	-0.09	0.269	0.435
	WLAN5GHz	802.11n-HT40 MCS0	Top Side	0mm	2	110	5550	15.38	17.38	1.585	98.08	1.020	0.14	0.156	0.252
	WLAN5GHz	802.11n-HT40 MCS0	Back	0mm	2	102	5510	15.34	17.34	1.585	98.08	1.020	0.12	0.914	1.478
	WLAN5GHz	802.11n-HT40 MCS0	Back	0mm	2	126	5630	15.19	17.19	1.585	98.08	1.020	0.03	0.847	1.369
	WLAN5GHz	802.11n-HT40 MCS0	Back	0mm	2	134	5670	15.00	17.00	1.585	98.08	1.020	0.03	0.922	1.490
	WLAN5GHz	802.11n-HT40 MCS0	Back	0mm	2	142	5710	14.79	16.79	1.585	98.08	1.020	0.09	0.932	1.507
	WLAN5GHz	802.11n-HT40 MCS0	Front	0mm	3	110	5550	13.45	15.45	1.585	98.08	1.020	-0.12	0.042	0.067
	WLAN5GHz	802.11n-HT40 MCS0	Back	0mm	3	110	5550	13.45	15.45	1.585	98.08	1.020	0.02	0.567	0.917
	WLAN5GHz	802.11n-HT40 MCS0	Right Side	0mm	3	110	5550	13.45	15.45	1.585	98.08	1.020	0.19	0.169	0.273
	WLAN5GHz	802.11n-HT40 MCS0	Top Side	0mm	3	110	5550	13.45	15.45	1.585	98.08	1.020	0.11	0.098	0.158
	WLAN5GHz	802.11n-HT40 MCS0	Back	0mm	3	102	5510	13.42	15.42	1.585	98.08	1.020	0.16	0.576	0.931
	WLAN5GHz	802.11n-HT40 MCS0	Back	0mm	3	126	5630	13.25	15.25	1.585	98.08	1.020	0.17	0.531	0.858
	WLAN5GHz	802.11n-HT40 MCS0	Back	0mm	3	134	5670	13.01	15.01	1.585	98.08	1.020	0.03	0.572	0.925
	WLAN5GHz	802.11n-HT40 MCS0	Back	0mm	3	142	5710	12.85	14.85	1.585	98.08	1.020	0.19	0.585	0.946

Plot No.	Band	Mode	Test Position	Gap (mm)	output Power state	Ch.	Freq. (MHz)	Average Power (dBm)	Tune-Up Limit (dBm)	Tune-up Scaling Factor	Duty Cycle %	Duty Cycle Scaling Factor	Power Drift (dB)	Measured 10g SAR (W/kg)	Reported 10g SAR (W/kg)
	WLAN5GHz	802.11n-HT40 MCS0	Front	0mm	1	151	5755	17.52	19.52	1.585	98.08	1.020	0.15	0.076	0.123
	WLAN5GHz	802.11n-HT40 MCS0	Back	0mm	1	151	5755	17.52	19.52	1.585	98.08	1.020	0.09	1.240	2.005
	WLAN5GHz	802.11n-HT40 MCS0	Right Side	0mm	1	151	5755	17.52	19.52	1.585	98.08	1.020	0.16	0.371	0.600
	WLAN5GHz	802.11n-HT40 MCS0	Top Side	0mm	1	151	5755	17.52	19.52	1.585	98.08	1.020	-0.11	0.228	0.369
101	WLAN5GHz	802.11n-HT40 MCS0	Back	0mm	1	159	5795	17.23	19.23	1.585	98.08	1.020	0	1.510	2.441
	WLAN5GHz	802.11n-HT40 MCS0	Front	0mm	2	151	5755	15.47	17.47	1.585	98.08	1.020	0.14	0.083	0.134
	WLAN5GHz	802.11n-HT40 MCS0	Back	0mm	2	151	5755	15.47	17.47	1.585	98.08	1.020	-0.09	0.858	1.387
	WLAN5GHz	802.11n-HT40 MCS0	Right Side	0mm	2	151	5755	15.47	17.47	1.585	98.08	1.020	0.05	0.268	0.433
	WLAN5GHz	802.11n-HT40 MCS0	Top Side	0mm	2	151	5755	15.47	17.47	1.585	98.08	1.020	0.02	0.096	0.155
	WLAN5GHz	802.11n-HT40 MCS0	Back	0mm	2	159	5795	15.17	17.17	1.585	98.08	1.020	0.03	0.897	1.450
	WLAN5GHz	802.11n-HT40 MCS0	Front	0mm	3	151	5755	13.52	15.52	1.585	98.08	1.020	0.05	0.052	0.084
	WLAN5GHz	802.11n-HT40 MCS0	Back	0mm	3	151	5755	13.52	15.52	1.585	98.08	1.020	0.19	0.537	0.868
	WLAN5GHz	802.11n-HT40 MCS0	Right Side	0mm	3	151	5755	13.52	15.52	1.585	98.08	1.020	-0.01	0.168	0.272
	WLAN5GHz	802.11n-HT40 MCS0	Top Side	0mm	3	151	5755	13.52	15.52	1.585	98.08	1.020	-0.02	0.060	0.097
	WLAN5GHz	802.11n-HT40 MCS0	Back	0mm	3	159	5795	13.24	15.24	1.585	98.08	1.020	-0.18	0.564	0.912

17.5 Repeated SAR Measurement

No.	Band	BW (MHz)	Modulation	RB Size	RB offset	Test Position	Gap (mm)	Power Reduction	Ch.	Freq. (MHz)	Average Power (dBm)	Tune-Up Limit (dBm)	Tune-up Scaling Factor	Duty Cycle %	Duty Cycle Scaling Factor	Power Drift (dB)	Measured 1g SAR (W/kg)	Ratio	Reported 1g SAR (W/kg)
1st	LTE Band 48_UAT	20M	QPSK	50	24	Right Tilted	0mm	Reduced	56640	3690	14.00	14.30	1.072	62.9	1.006	0.1	0.846	-	0.912
2nd	LTE Band 48_UAT	20M	QPSK	50	24	Right Tilted	0mm	Reduced	56640	3690	14.00	14.30	1.072	62.9	1.006	0.09	0.811	1.04	0.874

No.	Band	BW (MHz)	Modulation	RB Size	RB offset	Test Position	Gap (mm)	Power Reduction	Ch.	Freq. (MHz)	Average Power (dBm)	Tune-Up Limit (dBm)	Tune-up Scaling Factor	Power Drift (dB)	Measured 10g SAR (W/kg)	Ratio	Reported 10g SAR (W/kg)
1st	LTE Band 25_UAT	20M	QPSK	1	0	Top Side	0mm	Full	26140	1860	21.15	22.00	1.216	-0.12	2.130	-	2.590
2nd	LTE Band 25_UAT	20M	QPSK	1	0	Top Side	0mm	Full	26140	1860	21.15	22.00	1.216	0.14	2.060	1.03	2.505
1st	LTE Band 7_LAT	20M	QPSK	50	24	Back	0mm	Reduced	20850	2510	18.47	18.80	1.079	0.14	2.120	-	2.287
2nd	LTE Band 7_LAT	20M	QPSK	50	24	Back	0mm	Reduced	20850	2510	18.47	18.80	1.079	0.1	2.030	1.04	2.190

General Note:

1. Per KDB 865664 D01v01r04, for each frequency band, repeated SAR measurement is required only when the measured SAR is ≥0.8W/kg.
2. Per KDB 865664 D01v01r04, if the ratio among the repeated measurement is ≤ 1.2 and the measured SAR <1.45W/kg, only one repeated measurement is required.
3. Per KDB 865664 D01v01r04, if the extremity repeated SAR is necessary, the same procedures should be adapted for measurements according to extremity and occupational exposure limits by applying a factor of 2.5 for extremity exposure and a factor of 5 for occupational exposure to the corresponding SAR thresholds.
4. The ratio is the difference in percentage between original and repeated *measured SAR*.
5. All measurement SAR result is scaled-up to account for tune-up tolerance and is compliant.

17.6 TDD B41 Linearity Data Analysis

General Note:
This device support Power Class 2 and Power Class 3 operations for LTE Band 41. The highest available duty cycle for Power Class 2 operation is 43.3% using UL-DL configuration 1. Per FCC Guidance based on the device behavior, all SAR tests were performed using Power Class 3. Power Class 2 is tested using the highest SAR test configuration in Power Class 3 for each LTE configuration and exposure condition combination, according to the highest time averaged power for all applicable uplink-downlink configurations in Power Class 2. When the reported SAR vs. output power is linearly scaled with < 10% discrepancy between power classes and all reported SAR are < 1.4 W/kg, Separate SAR testing for Power Class 2 is not required

UAT Body	LTE Band 41 (Power Class 3)	LTE Band 41 (Power Class 2)
Maximum Tune up Power (dBm)	17.8	19.8
Reported 1g SAR (W/kg)	0.792	0.92
Duty Cycle	63.30%	43.30%
Frame Averaged (mW)	38.14	41.35
Linearity SAR(W/kg)	0.86	
% deviation from expected linearity		7.15%

LAT Body	LTE Band 41 (Power Class 3)	LTE Band 41 (Power Class 2)
Maximum Tune up Power (dBm)	20.8	23.3
Reported 1g SAR (W/kg)	0.576	0.713
Duty Cycle	63.30%	43.30%
Frame Averaged (mW)	76.10	92.57
Linearity SAR(W/kg)	0.70	
% deviation from expected linearity		1.76%

UAT Head	LTE Band 41 (Power Class 3)	LTE Band 41 (Power Class 2)
Maximum Tune up Power (dBm)	17.3	18.3
Reported 1g SAR (W/kg)	0.761	0.714
Duty Cycle	63.30%	43.30%
Frame Averaged (mW)	33.99	29.27
Linearity SAR(W/kg)	0.66	
% deviation from expected linearity		8.95%

LAT Body	LTE Band 41 (Power Class 3)	LTE Band 41 (Power Class 2)
Maximum Tune up Power (dBm)	23.8	24.8
Reported 1g SAR (W/kg)	0.307	0.26
Duty Cycle	63.30%	43.30%
Frame Averaged (mW)	151.85	130.76
Linearity SAR(W/kg)	0.26	
% deviation from expected linearity		-1.66%

UAT Extremity	LTE Band 41 (Power Class 3)	LTE Band 41 (Power Class 2)
Maximum Tune up Power (dBm)	21.8	24.3
Reported 1g SAR (W/kg)	1.801	1.994
Duty Cycle	63.30%	43.30%
Frame Averaged (mW)	95.81	116.54
Linearity SAR(W/kg)	2.19	
% deviation from expected linearity		-8.98%

18. Simultaneous Transmission Analysis

NO.	Simultaneous Transmission Configurations	Portable Handset			
		Head	Body-worn	Hotspot	Product Specific
1.	WWAN or WLAN2.4GHz or WLAN5GHz Standalone	Yes	Yes	**No**	Yes
2.	WWAN + BT	Yes	Yes	Yes	Yes
3.	WLAN 5GHz + BT	Yes	Yes	**No**	Yes
4.	WLAN2.4GHz + WLAN5GHz	Yes	Yes	**No**	Yes
5.	WWAN + WLAN2.4GHz	Yes	Yes	Yes	Yes
6.	WWAN + WLAN5GHz + Bluetooth	Yes	Yes	Yes	Yes
7.	WWAN + WLAN2.4GHz + WLAN5GHz	Yes	Yes	Yes	Yes
8.	WWAN + WLAN 2.4GHz + FR1	Yes	Yes	Yes	Yes
9.	WWAN + WLAN5GHz + Bluetooth + FR1	Yes	Yes	Yes	Yes

General Note:

1. This device WLAN 2.4GHz / 5.2GHz / 5.8GHz supports Hotspot operation and Bluetooth support tethering applications.
2. 2.4GHz WLAN and Bluetooth share the same antenna, and cannot transmit simultaneously.
3. All licensed modes share the same antenna part and cannot transmit simultaneously.
4. The Scaled SAR summation is calculated based on the same configuration and test position.
5. Per KDB 447498 D01v06, simultaneous transmission SAR is compliant if,
   i) Scalar SAR summation < 1.6W/kg.
   ii) SPLSR = (SAR1 + SAR2)^1.5 / (min. separation distance, mm), and the peak separation distance is determined from the square root of [(x1-x2)2 + (y1-y2)2 + (z1-z2)2], where (x1, y1, z1) and (x2, y2, z2) are the coordinates of the extrapolated peak SAR locations in the zoom scan.
   iii) If SPLSR ≤ 0.04, simultaneously transmission SAR measurement is not necessary.
   iv) Simultaneously transmission SAR measurement, and the reported multi-band SAR < 1.6W/kg.

18.1 Head Exposure Conditions

WWAN Band	Exposure Position	1	2	4	1+2 Summed 1g SAR (W/kg)	1+4 Summed 1g SAR (W/kg)
		WWAN	2.4GHz WLAN	5GHz WLAN		
		1g SAR (W/kg)	1g SAR (W/kg)	1g SAR (W/kg)		
GSM850_UAT	Right Cheek	0.243	0.136	0.234	**0.379**	**0.477**
	Right Tilted	0.042	0.130	0.270	**0.172**	**0.312**
	Left Cheek	0.486	0.488	0.322	**0.974**	**0.808**
	Left Tilted	0.065	0.420	0.561	**0.485**	**0.626**
GSM1900_UAT	Right Cheek	0.384	0.136	0.234	**0.520**	**0.618**
	Right Tilted	0.448	0.130	0.270	**0.578**	**0.718**
	Left Cheek	0.264	0.488	0.322	**0.752**	**0.586**
	Left Tilted	0.342	0.420	0.561	**0.762**	**0.903**
WCDMA V_UAT	Right Cheek	0.482	0.136	0.234	**0.618**	**0.716**
	Right Tilted	0.089	0.130	0.270	**0.219**	**0.359**
	Left Cheek	0.656	0.488	0.322	**1.144**	**0.978**
	Left Tilted	0.089	0.420	0.561	**0.509**	**0.650**
WCDMA IV_UAT	Right Cheek	0.483	0.136	0.234	**0.619**	**0.717**
	Right Tilted	0.668	0.130	0.270	**0.798**	**0.938**
	Left Cheek	0.322	0.488	0.322	**0.810**	**0.644**
	Left Tilted	0.416	0.420	0.561	**0.836**	**0.977**
WCDMA II_UAT	Right Cheek	0.613	0.136	0.234	**0.749**	**0.847**
	Right Tilted	0.741	0.130	0.270	**0.871**	**1.011**
	Left Cheek	0.459	0.488	0.322	**0.947**	**0.781**
	Left Tilted	0.542	0.420	0.561	**0.962**	**1.103**
CDMA2000 BC0_UAT	Right Cheek	0.478	0.136	0.234	**0.614**	**0.712**
	Right Tilted	0.094	0.130	0.270	**0.224**	**0.364**
	Left Cheek	0.680	0.488	0.322	**1.168**	**1.002**
	Left Tilted	0.094	0.420	0.561	**0.514**	**0.655**
CDMA2000 BC10_UAT	Right Cheek	0.484	0.136	0.234	**0.620**	**0.718**
	Right Tilted	0.093	0.130	0.270	**0.223**	**0.363**
	Left Cheek	0.713	0.488	0.322	**1.201**	**1.035**
	Left Tilted	0.105	0.420	0.561	**0.525**	**0.666**
CDMA2000 BC1_UAT	Right Cheek	0.795	0.136	0.234	**0.931**	**1.029**
	Right Tilted	0.697	0.130	0.270	**0.827**	**0.967**
	Left Cheek	0.718	0.488	0.322	**1.206**	**1.040**
	Left Tilted	0.686	0.420	0.561	**1.106**	**1.247**
LTE Band 71_UAT	Right Cheek	0.600	0.136	0.234	**0.736**	**0.834**
	Right Tilted	0.136	0.130	0.270	**0.266**	**0.406**
	Left Cheek	0.707	0.488	0.322	**1.195**	**1.029**
	Left Tilted	0.115	0.420	0.561	**0.535**	**0.676**
LTE Band 12_UAT	Right Cheek	0.519	0.136	0.234	**0.655**	**0.753**
	Right Tilted	0.106	0.130	0.270	**0.236**	**0.376**
	Left Cheek	0.605	0.488	0.322	**1.093**	**0.927**
	Left Tilted	0.110	0.420	0.561	**0.530**	**0.671**
LTE Band 13_UAT	Right Cheek	0.550	0.136	0.234	**0.686**	**0.784**
	Right Tilted	0.113	0.130	0.270	**0.243**	**0.383**
	Left Cheek	0.714	0.488	0.322	**1.202**	**1.036**
	Left Tilted	0.111	0.420	0.561	**0.531**	**0.672**
LTE Band 5_UAT	Right Cheek	0.413	0.136	0.234	**0.549**	**0.647**
	Right Tilted	0.090	0.130	0.270	**0.220**	**0.360**
	Left Cheek	0.604	0.488	0.322	**1.092**	**0.926**
	Left Tilted	0.092	0.420	0.561	**0.512**	**0.653**
LTE Band 26_UAT	Right Cheek	0.291	0.136	0.234	**0.427**	**0.525**
	Right Tilted	0.085	0.130	0.270	**0.215**	**0.355**
	Left Cheek	0.712	0.488	0.322	**1.200**	**1.034**

	Left Tilted	0.104	0.420	0.561	**0.524**	**0.665**
LTE Band 66_UAT	Right Cheek	0.509	0.136	0.234	**0.645**	**0.743**
	Right Tilted	0.736	0.130	0.270	**0.866**	**1.006**
	Left Cheek	0.345	0.488	0.322	**0.833**	**0.667**
	Left Tilted	0.465	0.420	0.561	**0.885**	**1.026**
LTE Band 25_UAT	Right Cheek	0.687	0.136	0.234	**0.823**	**0.921**
	Right Tilted	0.896	0.130	0.270	**1.026**	**1.166**
	Left Cheek	0.533	0.488	0.322	**1.021**	**0.855**
	Left Tilted	0.639	0.420	0.561	**1.059**	**1.200**
LTE Band 30_UAT	Right Cheek	0.775	0.136	0.234	**0.911**	**1.009**
	Right Tilted	0.898	0.130	0.270	**1.028**	**1.168**
	Left Cheek	0.640	0.488	0.322	**1.128**	**0.962**
	Left Tilted	0.677	0.420	0.561	**1.097**	**1.238**
LTE Band 7_UAT	Right Cheek	0.770	0.136	0.234	**0.906**	**1.004**
	Right Tilted	0.687	0.130	0.270	**0.817**	**0.957**
	Left Cheek	0.468	0.488	0.322	**0.956**	**0.790**
	Left Tilted	0.555	0.420	0.561	**0.975**	**1.116**
LTE Band 41_UAT	Right Cheek	0.761	0.136	0.234	**0.897**	**0.995**
	Right Tilted	0.467	0.130	0.270	**0.597**	**0.737**
	Left Cheek	0.403	0.488	0.322	**0.891**	**0.725**
	Left Tilted	0.417	0.420	0.561	**0.837**	**0.978**
LTE Band 41(HPUE)_UAT	Right Cheek	0.714	0.136	0.234	**0.850**	**0.948**
	Right Tilted	0.410	0.130	0.270	**0.540**	**0.680**
	Left Cheek	0.337	0.488	0.322	**0.825**	**0.659**
	Left Tilted	0.343	0.420	0.561	**0.763**	**0.904**
LTE Band 48_UAT	Right Cheek	0.522	0.136	0.234	**0.658**	**0.756**
	Right Tilted	0.912	0.130	0.270	**1.042**	**1.182**
	Left Cheek	0.302	0.488	0.322	**0.790**	**0.624**
	Left Tilted	0.343	0.420	0.561	**0.763**	**0.904**

WWAN Band	Exposure Position	1	2	4	6	7	1+2+4 Summed 1g SAR (W/kg)	1+4+6 Summed 1g SAR (W/kg)	1+4+7 Summed 1g SAR (W/kg)
		WWAN	2.4GHz WLAN	5GHz WLAN	Bluetooth Chain 0	Bluetooth Chain 1			
		1g SAR (W/kg)	1g SAR (W/kg)	1g SAR (W/kg)	1g SAR (W/kg)	1g SAR (W/kg)			
GSM850_UAT	Right Cheek	0.243	0.087	0.140	0.033	0.063	**0.470**	**0.416**	**0.446**
	Right Tilted	0.042	0.083	0.186	0.021	0.059	**0.311**	**0.249**	**0.287**
	Left Cheek	0.486	0.309	0.259	0.276	0.222	**1.054**	**1.021**	**0.967**
	Left Tilted	0.065	0.266	0.323	0.071	0.192	**0.654**	**0.459**	**0.580**
GSM1900_UAT	Right Cheek	0.384	0.087	0.140	0.033	0.063	**0.611**	**0.557**	**0.587**
	Right Tilted	0.448	0.083	0.186	0.021	0.059	**0.717**	**0.655**	**0.693**
	Left Cheek	0.264	0.309	0.259	0.276	0.222	**0.832**	**0.799**	**0.745**
	Left Tilted	0.342	0.266	0.323	0.071	0.192	**0.931**	**0.736**	**0.857**
WCDMA V_UAT	Right Cheek	0.482	0.087	0.140	0.033	0.063	**0.709**	**0.655**	**0.685**
	Right Tilted	0.089	0.083	0.186	0.021	0.059	**0.358**	**0.296**	**0.334**
	Left Cheek	0.656	0.309	0.259	0.276	0.222	**1.224**	**1.191**	**1.137**
	Left Tilted	0.089	0.266	0.323	0.071	0.192	**0.678**	**0.483**	**0.604**
WCDMA IV_UAT	Right Cheek	0.483	0.087	0.140	0.033	0.063	**0.710**	**0.656**	**0.686**
	Right Tilted	0.668	0.083	0.186	0.021	0.059	**0.937**	**0.875**	**0.913**
	Left Cheek	0.322	0.309	0.259	0.276	0.222	**0.890**	**0.857**	**0.803**
	Left Tilted	0.416	0.266	0.323	0.071	0.192	**1.005**	**0.810**	**0.931**
WCDMA II_UAT	Right Cheek	0.613	0.087	0.140	0.033	0.063	**0.840**	**0.786**	**0.816**
	Right Tilted	0.741	0.083	0.186	0.021	0.059	**1.010**	**0.948**	**0.986**
	Left Cheek	0.459	0.309	0.259	0.276	0.222	**1.027**	**0.994**	**0.940**
	Left Tilted	0.542	0.266	0.323	0.071	0.192	**1.131**	**0.936**	**1.057**
CDMA2000 BC0_UAT	Right Cheek	0.478	0.087	0.140	0.033	0.063	**0.705**	**0.651**	**0.681**
	Right Tilted	0.094	0.083	0.186	0.021	0.059	**0.363**	**0.301**	**0.339**

	Left Cheek	0.680	0.309	0.259	0.276	0.222	**1.248**	**1.215**	**1.161**
	Left Tilted	0.094	0.266	0.323	0.071	0.192	**0.683**	**0.488**	**0.609**
CDMA2000 BC10_UAT	Right Cheek	0.484	0.087	0.140	0.033	0.063	**0.711**	**0.657**	**0.687**
	Right Tilted	0.093	0.083	0.186	0.021	0.059	**0.362**	**0.300**	**0.338**
	Left Cheek	0.713	0.309	0.259	0.276	0.222	**1.281**	**1.248**	**1.194**
	Left Tilted	0.105	0.266	0.323	0.071	0.192	**0.694**	**0.499**	**0.620**
CDMA2000 BC1_UAT	Right Cheek	0.795	0.087	0.140	0.033	0.063	**1.022**	**0.968**	**0.998**
	Right Tilted	0.697	0.083	0.186	0.021	0.059	**0.966**	**0.904**	**0.942**
	Left Cheek	0.718	0.309	0.259	0.276	0.222	**1.286**	**1.253**	**1.199**
	Left Tilted	0.686	0.266	0.323	0.071	0.192	**1.275**	**1.080**	**1.201**
LTE Band 71_UAT	Right Cheek	0.600	0.087	0.140	0.033	0.063	**0.827**	**0.773**	**0.803**
	Right Tilted	0.136	0.083	0.186	0.021	0.059	**0.405**	**0.343**	**0.381**
	Left Cheek	0.707	0.309	0.259	0.276	0.222	**1.275**	**1.242**	**1.188**
	Left Tilted	0.115	0.266	0.323	0.071	0.192	**0.704**	**0.509**	**0.630**
LTE Band 12_UAT	Right Cheek	0.519	0.087	0.140	0.033	0.063	**0.746**	**0.692**	**0.722**
	Right Tilted	0.106	0.083	0.186	0.021	0.059	**0.375**	**0.313**	**0.351**
	Left Cheek	0.605	0.309	0.259	0.276	0.222	**1.173**	**1.140**	**1.086**
	Left Tilted	0.110	0.266	0.323	0.071	0.192	**0.699**	**0.504**	**0.625**
LTE Band 13_UAT	Right Cheek	0.550	0.087	0.140	0.033	0.063	**0.777**	**0.723**	**0.753**
	Right Tilted	0.113	0.083	0.186	0.021	0.059	**0.382**	**0.320**	**0.358**
	Left Cheek	0.714	0.309	0.259	0.276	0.222	**1.282**	**1.249**	**1.195**
	Left Tilted	0.111	0.266	0.323	0.071	0.192	**0.700**	**0.505**	**0.626**
LTE Band 5_UAT	Right Cheek	0.413	0.087	0.140	0.033	0.063	**0.640**	**0.586**	**0.616**
	Right Tilted	0.090	0.083	0.186	0.021	0.059	**0.359**	**0.297**	**0.335**
	Left Cheek	0.604	0.309	0.259	0.276	0.222	**1.172**	**1.139**	**1.085**
	Left Tilted	0.092	0.266	0.323	0.071	0.192	**0.681**	**0.486**	**0.607**
LTE Band 26_UAT	Right Cheek	0.291	0.087	0.140	0.033	0.063	**0.518**	**0.464**	**0.494**
	Right Tilted	0.085	0.083	0.186	0.021	0.059	**0.354**	**0.292**	**0.330**
	Left Cheek	0.712	0.309	0.259	0.276	0.222	**1.280**	**1.247**	**1.193**
	Left Tilted	0.104	0.266	0.323	0.071	0.192	**0.693**	**0.498**	**0.619**
LTE Band 66_UAT	Right Cheek	0.509	0.087	0.140	0.033	0.063	**0.736**	**0.682**	**0.712**
	Right Tilted	0.736	0.083	0.186	0.021	0.059	**1.005**	**0.943**	**0.981**
	Left Cheek	0.345	0.309	0.259	0.276	0.222	**0.913**	**0.880**	**0.826**
	Left Tilted	0.465	0.266	0.323	0.071	0.192	**1.054**	**0.859**	**0.980**
LTE Band 25_UAT	Right Cheek	0.687	0.087	0.140	0.033	0.063	**0.914**	**0.860**	**0.890**
	Right Tilted	0.896	0.083	0.186	0.021	0.059	**1.165**	**1.103**	**1.141**
	Left Cheek	0.533	0.309	0.259	0.276	0.222	**1.101**	**1.068**	**1.014**
	Left Tilted	0.639	0.266	0.323	0.071	0.192	**1.228**	**1.033**	**1.154**
LTE Band 30_UAT	Right Cheek	0.775	0.087	0.140	0.033	0.063	**1.002**	**0.948**	**0.978**
	Right Tilted	0.898	0.083	0.186	0.021	0.059	**1.167**	**1.105**	**1.143**
	Left Cheek	0.640	0.309	0.259	0.276	0.222	**1.208**	**1.175**	**1.121**
	Left Tilted	0.677	0.266	0.323	0.071	0.192	**1.266**	**1.071**	**1.192**
LTE Band 7_UAT	Right Cheek	0.770	0.087	0.140	0.033	0.063	**0.997**	**0.943**	**0.973**
	Right Tilted	0.687	0.083	0.186	0.021	0.059	**0.956**	**0.894**	**0.932**
	Left Cheek	0.468	0.309	0.259	0.276	0.222	**1.036**	**1.003**	**0.949**
	Left Tilted	0.555	0.266	0.323	0.071	0.192	**1.144**	**0.949**	**1.070**
LTE Band 41_UAT	Right Cheek	0.761	0.087	0.140	0.033	0.063	**0.988**	**0.934**	**0.964**
	Right Tilted	0.467	0.083	0.186	0.021	0.059	**0.736**	**0.674**	**0.712**
	Left Cheek	0.403	0.309	0.259	0.276	0.222	**0.971**	**0.938**	**0.884**
	Left Tilted	0.417	0.266	0.323	0.071	0.192	**1.006**	**0.811**	**0.932**
LTE Band 41(HPUE)_UAT	Right Cheek	0.714	0.087	0.140	0.033	0.063	**0.941**	**0.887**	**0.917**
	Right Tilted	0.410	0.083	0.186	0.021	0.059	**0.679**	**0.617**	**0.655**
	Left Cheek	0.337	0.309	0.259	0.276	0.222	**0.905**	**0.872**	**0.818**
	Left Tilted	0.343	0.266	0.323	0.071	0.192	**0.932**	**0.737**	**0.858**
LTE Band 48_UAT	Right Cheek	0.522	0.087	0.140	0.033	0.063	**0.749**	**0.695**	**0.725**
	Right Tilted	0.912	0.083	0.186	0.021	0.059	**1.181**	**1.119**	**1.157**

	Left Cheek	0.302	0.309	0.259	0.276	0.222	**0.870**	**0.837**	**0.783**
	Left Tilted	0.343	0.266	0.323	0.071	0.192	**0.932**	**0.737**	**0.858**

WWAN Band	Exposure Position	1	2	4	1+2 Summed 1g SAR (W/kg)	1+4 Summed 1g SAR (W/kg)
		WWAN	2.4GHz WLAN	5GHz WLAN		
		1g SAR (W/kg)	1g SAR (W/kg)	1g SAR (W/kg)		
GSM850_LAT	Right Cheek	0.126	0.136	0.234	**0.262**	**0.360**
	Right Tilted	0.078	0.130	0.270	**0.208**	**0.348**
	Left Cheek	0.207	0.488	0.322	**0.695**	**0.529**
	Left Tilted	0.061	0.420	0.561	**0.481**	**0.622**
GSM1900_LAT	Right Cheek	0.142	0.136	0.234	**0.278**	**0.376**
	Right Tilted	0.122	0.130	0.270	**0.252**	**0.392**
	Left Cheek	0.099	0.488	0.322	**0.587**	**0.421**
	Left Tilted	0.097	0.420	0.561	**0.517**	**0.658**
WCDMA V_LAT	Right Cheek	0.144	0.136	0.234	**0.280**	**0.378**
	Right Tilted	0.073	0.130	0.270	**0.203**	**0.343**
	Left Cheek	0.192	0.488	0.322	**0.680**	**0.514**
	Left Tilted	0.089	0.420	0.561	**0.509**	**0.650**
WCDMA IV_LAT	Right Cheek	0.218	0.136	0.234	**0.354**	**0.452**
	Right Tilted	0.120	0.130	0.270	**0.250**	**0.390**
	Left Cheek	0.295	0.488	0.322	**0.783**	**0.617**
	Left Tilted	0.118	0.420	0.561	**0.538**	**0.679**
WCDMA II_LAT	Right Cheek	0.288	0.136	0.234	**0.424**	**0.522**
	Right Tilted	0.231	0.130	0.270	**0.361**	**0.501**
	Left Cheek	0.209	0.488	0.322	**0.697**	**0.531**
	Left Tilted	0.175	0.420	0.561	**0.595**	**0.736**
CDMA2000 BC0_LAT	Right Cheek	0.152	0.136	0.234	**0.288**	**0.386**
	Right Tilted	0.095	0.130	0.270	**0.225**	**0.365**
	Left Cheek	0.177	0.488	0.322	**0.665**	**0.499**
	Left Tilted	0.069	0.420	0.561	**0.489**	**0.630**
CDMA2000 BC10_LAT	Right Cheek	0.149	0.136	0.234	**0.285**	**0.383**
	Right Tilted	0.093	0.130	0.270	**0.223**	**0.363**
	Left Cheek	0.167	0.488	0.322	**0.655**	**0.489**
	Left Tilted	0.072	0.420	0.561	**0.492**	**0.633**
CDMA2000 BC1_LAT	Right Cheek	0.330	0.136	0.234	**0.466**	**0.564**
	Right Tilted	0.214	0.130	0.270	**0.344**	**0.484**
	Left Cheek	0.191	0.488	0.322	**0.679**	**0.513**
	Left Tilted	0.172	0.420	0.561	**0.592**	**0.733**
LTE Band 71_LAT	Right Cheek	0.109	0.136	0.234	**0.245**	**0.343**
	Right Tilted	0.054	0.130	0.270	**0.184**	**0.324**
	Left Cheek	0.115	0.488	0.322	**0.603**	**0.437**
	Left Tilted	0.051	0.420	0.561	**0.471**	**0.612**
LTE Band 12_LAT	Right Cheek	0.168	0.136	0.234	**0.304**	**0.402**
	Right Tilted	0.095	0.130	0.270	**0.225**	**0.365**
	Left Cheek	0.206	0.488	0.322	**0.694**	**0.528**
	Left Tilted	0.084	0.420	0.561	**0.504**	**0.645**
LTE Band 13_LAT	Right Cheek	0.116	0.136	0.234	**0.252**	**0.350**
	Right Tilted	0.056	0.130	0.270	**0.186**	**0.326**
	Left Cheek	0.148	0.488	0.322	**0.636**	**0.470**
	Left Tilted	0.050	0.420	0.561	**0.470**	**0.611**
LTE Band 5_LAT	Right Cheek	0.145	0.136	0.234	**0.281**	**0.379**
	Right Tilted	0.089	0.130	0.270	**0.219**	**0.359**
	Left Cheek	0.205	0.488	0.322	**0.693**	**0.527**
	Left Tilted	0.088	0.420	0.561	**0.508**	**0.649**
LTE Band 26_LAT	Right Cheek	0.082	0.136	0.234	**0.218**	**0.316**
	Right Tilted	0.091	0.130	0.270	**0.221**	**0.361**

	Left Cheek	0.199	0.488	0.322	**0.687**	**0.521**
	Left Tilted	0.073	0.420	0.561	**0.493**	**0.634**
LTE Band 66_LAT	Right Cheek	0.272	0.136	0.234	**0.408**	**0.506**
	Right Tilted	0.141	0.130	0.270	**0.271**	**0.411**
	Left Cheek	0.228	0.488	0.322	**0.716**	**0.550**
	Left Tilted	0.099	0.420	0.561	**0.519**	**0.660**
LTE Band 25_LAT	Right Cheek	0.355	0.136	0.234	**0.491**	**0.589**
	Right Tilted	0.184	0.130	0.270	**0.314**	**0.454**
	Left Cheek	0.178	0.488	0.322	**0.666**	**0.500**
	Left Tilted	0.137	0.420	0.561	**0.557**	**0.698**
LTE Band 30_LAT	Right Cheek	0.235	0.136	0.234	**0.371**	**0.469**
	Right Tilted	0.104	0.130	0.270	**0.234**	**0.374**
	Left Cheek	0.382	0.488	0.322	**0.870**	**0.704**
	Left Tilted	0.139	0.420	0.561	**0.559**	**0.700**
LTE Band 7_LAT	Right Cheek	0.200	0.136	0.234	**0.336**	**0.434**
	Right Tilted	0.194	0.130	0.270	**0.324**	**0.464**
	Left Cheek	0.357	0.488	0.322	**0.845**	**0.679**
	Left Tilted	0.115	0.420	0.561	**0.535**	**0.676**
LTE Band 41_LAT	Right Cheek	0.125	0.136	0.234	**0.261**	**0.359**
	Right Tilted	0.098	0.130	0.270	**0.228**	**0.368**
	Left Cheek	0.307	0.488	0.322	**0.795**	**0.629**
	Left Tilted	0.046	0.420	0.561	**0.466**	**0.607**
LTE Band 41(HPUE)_LAT	Right Cheek	0.155	0.136	0.234	**0.291**	**0.389**
	Right Tilted	0.115	0.130	0.270	**0.245**	**0.385**
	Left Cheek	0.260	0.488	0.322	**0.748**	**0.582**
	Left Tilted	0.076	0.420	0.561	**0.496**	**0.637**

WWAN Band	Exposure Position	1	2	4	6	7	1+2+4 Summed 1g SAR (W/kg)	1+4+6 Summed 1g SAR (W/kg)	1+4+7 Summed 1g SAR (W/kg)
		WWAN	2.4GHz WLAN	5GHz WLAN	Bluetooth Chain 0	Bluetooth Chain 1			
		1g SAR (W/kg)	1g SAR (W/kg)	1g SAR (W/kg)	1g SAR (W/kg)	1g SAR (W/kg)			
GSM850_LAT	Right Cheek	0.126	0.087	0.140	0.033	0.063	**0.353**	**0.299**	**0.329**
	Right Tilted	0.078	0.083	0.186	0.021	0.059	**0.347**	**0.285**	**0.323**
	Left Cheek	0.207	0.309	0.259	0.276	0.222	**0.775**	**0.742**	**0.688**
	Left Tilted	0.061	0.266	0.323	0.071	0.192	**0.650**	**0.455**	**0.576**
GSM1900_LAT	Right Cheek	0.142	0.087	0.140	0.033	0.063	**0.369**	**0.315**	**0.345**
	Right Tilted	0.122	0.083	0.186	0.021	0.059	**0.391**	**0.329**	**0.367**
	Left Cheek	0.099	0.309	0.259	0.276	0.222	**0.667**	**0.634**	**0.580**
	Left Tilted	0.097	0.266	0.323	0.071	0.192	**0.686**	**0.491**	**0.612**
WCDMA V_LAT	Right Cheek	0.144	0.087	0.140	0.033	0.063	**0.371**	**0.317**	**0.347**
	Right Tilted	0.073	0.083	0.186	0.021	0.059	**0.342**	**0.280**	**0.318**
	Left Cheek	0.192	0.309	0.259	0.276	0.222	**0.760**	**0.727**	**0.673**
	Left Tilted	0.089	0.266	0.323	0.071	0.192	**0.678**	**0.483**	**0.604**
WCDMA IV_LAT	Right Cheek	0.218	0.087	0.140	0.033	0.063	**0.445**	**0.391**	**0.421**
	Right Tilted	0.120	0.083	0.186	0.021	0.059	**0.389**	**0.327**	**0.365**
	Left Cheek	0.295	0.309	0.259	0.276	0.222	**0.863**	**0.830**	**0.776**
	Left Tilted	0.118	0.266	0.323	0.071	0.192	**0.707**	**0.512**	**0.633**
WCDMA II_LAT	Right Cheek	0.288	0.087	0.140	0.033	0.063	**0.515**	**0.461**	**0.491**
	Right Tilted	0.231	0.083	0.186	0.021	0.059	**0.500**	**0.438**	**0.476**
	Left Cheek	0.209	0.309	0.259	0.276	0.222	**0.777**	**0.744**	**0.690**
	Left Tilted	0.175	0.266	0.323	0.071	0.192	**0.764**	**0.569**	**0.690**
CDMA2000 BC0_LAT	Right Cheek	0.152	0.087	0.140	0.033	0.063	**0.379**	**0.325**	**0.355**
	Right Tilted	0.095	0.083	0.186	0.021	0.059	**0.364**	**0.302**	**0.340**
	Left Cheek	0.177	0.309	0.259	0.276	0.222	**0.745**	**0.712**	**0.658**
	Left Tilted	0.069	0.266	0.323	0.071	0.192	**0.658**	**0.463**	**0.584**
CDMA2000	Right Cheek	0.149	0.087	0.140	0.033	0.063	**0.376**	**0.322**	**0.352**

BC10_LAT	Right Tilted	0.093	0.083	0.186	0.021	0.059	**0.362**	**0.300**	**0.338**
	Left Cheek	0.167	0.309	0.259	0.276	0.222	**0.735**	**0.702**	**0.648**
	Left Tilted	0.072	0.266	0.323	0.071	0.192	**0.661**	**0.466**	**0.587**
CDMA2000 BC1_LAT	Right Cheek	0.330	0.087	0.140	0.033	0.063	**0.557**	**0.503**	**0.533**
	Right Tilted	0.214	0.083	0.186	0.021	0.059	**0.483**	**0.421**	**0.459**
	Left Cheek	0.191	0.309	0.259	0.276	0.222	**0.759**	**0.726**	**0.672**
	Left Tilted	0.172	0.266	0.323	0.071	0.192	**0.761**	**0.566**	**0.687**
LTE Band 71_LAT	Right Cheek	0.109	0.087	0.140	0.033	0.063	**0.336**	**0.282**	**0.312**
	Right Tilted	0.054	0.083	0.186	0.021	0.059	**0.323**	**0.261**	**0.299**
	Left Cheek	0.115	0.309	0.259	0.276	0.222	**0.683**	**0.650**	**0.596**
	Left Tilted	0.051	0.266	0.323	0.071	0.192	**0.640**	**0.445**	**0.566**
LTE Band 12_LAT	Right Cheek	0.168	0.087	0.140	0.033	0.063	**0.395**	**0.341**	**0.371**
	Right Tilted	0.095	0.083	0.186	0.021	0.059	**0.364**	**0.302**	**0.340**
	Left Cheek	0.206	0.309	0.259	0.276	0.222	**0.774**	**0.741**	**0.687**
	Left Tilted	0.084	0.266	0.323	0.071	0.192	**0.673**	**0.478**	**0.599**
LTE Band 13_LAT	Right Cheek	0.116	0.087	0.140	0.033	0.063	**0.343**	**0.289**	**0.319**
	Right Tilted	0.056	0.083	0.186	0.021	0.059	**0.325**	**0.263**	**0.301**
	Left Cheek	0.148	0.309	0.259	0.276	0.222	**0.716**	**0.683**	**0.629**
	Left Tilted	0.050	0.266	0.323	0.071	0.192	**0.639**	**0.444**	**0.565**
LTE Band 5_LAT	Right Cheek	0.145	0.087	0.140	0.033	0.063	**0.372**	**0.318**	**0.348**
	Right Tilted	0.089	0.083	0.186	0.021	0.059	**0.358**	**0.296**	**0.334**
	Left Cheek	0.205	0.309	0.259	0.276	0.222	**0.773**	**0.740**	**0.686**
	Left Tilted	0.088	0.266	0.323	0.071	0.192	**0.677**	**0.482**	**0.603**
LTE Band 26_LAT	Right Cheek	0.082	0.087	0.140	0.033	0.063	**0.309**	**0.255**	**0.285**
	Right Tilted	0.091	0.083	0.186	0.021	0.059	**0.360**	**0.298**	**0.336**
	Left Cheek	0.199	0.309	0.259	0.276	0.222	**0.767**	**0.734**	**0.680**
	Left Tilted	0.073	0.266	0.323	0.071	0.192	**0.662**	**0.467**	**0.588**
LTE Band 66_LAT	Right Cheek	0.272	0.087	0.140	0.033	0.063	**0.499**	**0.445**	**0.475**
	Right Tilted	0.141	0.083	0.186	0.021	0.059	**0.410**	**0.348**	**0.386**
	Left Cheek	0.228	0.309	0.259	0.276	0.222	**0.796**	**0.763**	**0.709**
	Left Tilted	0.099	0.266	0.323	0.071	0.192	**0.688**	**0.493**	**0.614**
LTE Band 25_LAT	Right Cheek	0.355	0.087	0.140	0.033	0.063	**0.582**	**0.528**	**0.558**
	Right Tilted	0.184	0.083	0.186	0.021	0.059	**0.453**	**0.391**	**0.429**
	Left Cheek	0.178	0.309	0.259	0.276	0.222	**0.746**	**0.713**	**0.659**
	Left Tilted	0.137	0.266	0.323	0.071	0.192	**0.726**	**0.531**	**0.652**
LTE Band 30_LAT	Right Cheek	0.235	0.087	0.140	0.033	0.063	**0.462**	**0.408**	**0.438**
	Right Tilted	0.104	0.083	0.186	0.021	0.059	**0.373**	**0.311**	**0.349**
	Left Cheek	0.382	0.309	0.259	0.276	0.222	**0.950**	**0.917**	**0.863**
	Left Tilted	0.139	0.266	0.323	0.071	0.192	**0.728**	**0.533**	**0.654**
LTE Band 7_LAT	Right Cheek	0.200	0.087	0.140	0.033	0.063	**0.427**	**0.373**	**0.403**
	Right Tilted	0.194	0.083	0.186	0.021	0.059	**0.463**	**0.401**	**0.439**
	Left Cheek	0.357	0.309	0.259	0.276	0.222	**0.925**	**0.892**	**0.838**
	Left Tilted	0.115	0.266	0.323	0.071	0.192	**0.704**	**0.509**	**0.630**
LTE Band 41_LAT	Right Cheek	0.125	0.087	0.140	0.033	0.063	**0.352**	**0.298**	**0.328**
	Right Tilted	0.098	0.083	0.186	0.021	0.059	**0.367**	**0.305**	**0.343**
	Left Cheek	0.307	0.309	0.259	0.276	0.222	**0.875**	**0.842**	**0.788**
	Left Tilted	0.046	0.266	0.323	0.071	0.192	**0.635**	**0.440**	**0.561**
LTE Band 41(HPUE)_LAT	Right Cheek	0.155	0.087	0.140	0.033	0.063	**0.382**	**0.328**	**0.358**
	Right Tilted	0.115	0.083	0.186	0.021	0.059	**0.384**	**0.322**	**0.360**
	Left Cheek	0.260	0.309	0.259	0.276	0.222	**0.828**	**0.795**	**0.741**
	Left Tilted	0.076	0.266	0.323	0.071	0.192	**0.665**	**0.470**	**0.591**

18.2 Hotspot Exposure Conditions

WWAN Band	Exposure Position	1	2	4	1+2 Summed 1g SAR (W/kg)	1+4 Summed 1g SAR (W/kg)
		WWAN	2.4GHz WLAN	5GHz WLAN		
		1g SAR (W/kg)	1g SAR (W/kg)	1g SAR (W/kg)		
GSM850_UAT	Front	0.432	0.122	0.003	**0.554**	**0.435**
	Back	0.499	0.618	0.585	**1.117**	**1.084**
	Left side	0.852			**0.852**	**0.852**
	Right side	0.015	0.238	0.674	**0.253**	**0.689**
	Top side	0.017	0.158	0.108	**0.175**	**0.125**
	Bottom side				**0.000**	**0.000**
GSM1900_UAT	Front	0.245	0.122	0.003	**0.367**	**0.248**
	Back	0.231	0.618	0.585	**0.849**	**0.816**
	Left side	0.001			**0.001**	**0.001**
	Right side	0.001	0.238	0.674	**0.239**	**0.675**
	Top side	0.454	0.158	0.108	**0.612**	**0.562**
	Bottom side				**0.000**	**0.000**
WCDMA V_UAT	Front	0.481	0.122	0.003	**0.603**	**0.484**
	Back	0.581	0.618	0.585	**1.199**	**1.166**
	Left side	0.862			**0.862**	**0.862**
	Right side	0.022	0.238	0.674	**0.260**	**0.696**
	Top side	0.016	0.158	0.108	**0.174**	**0.124**
	Bottom side				**0.000**	**0.000**
WCDMA IV_UAT	Front	0.536	0.122	0.003	**0.658**	**0.539**
	Back	0.610	0.618	0.585	**1.228**	**1.195**
	Left side	0.208			**0.208**	**0.208**
	Right side	0.001	0.238	0.674	**0.239**	**0.675**
	Top side	0.823	0.158	0.108	**0.981**	**0.931**
	Bottom side				**0.000**	**0.000**
WCDMA II_UAT	Front	0.414	0.122	0.003	**0.536**	**0.417**
	Back	0.570	0.618	0.585	**1.188**	**1.155**
	Left side	0.127			**0.127**	**0.127**
	Right side	0.074	0.238	0.674	**0.312**	**0.748**
	Top side	0.843	0.158	0.108	**1.001**	**0.951**
	Bottom side				**0.000**	**0.000**
CDMA2000 BC0_UAT	Front	0.405	0.122	0.003	**0.527**	**0.408**
	Back	0.439	0.618	0.585	**1.057**	**1.024**
	Left side	0.719			**0.719**	**0.719**
	Right side	0.023	0.238	0.674	**0.261**	**0.697**
	Top side	0.018	0.158	0.108	**0.176**	**0.126**
	Bottom side				**0.000**	**0.000**
CDMA2000 BC10_UAT	Front	0.436	0.122	0.003	**0.558**	**0.439**
	Back	0.488	0.618	0.585	**1.106**	**1.073**
	Left side	0.726			**0.726**	**0.726**
	Right side	0.026	0.238	0.674	**0.264**	**0.700**
	Top side	0.019	0.158	0.108	**0.177**	**0.127**
	Bottom side				**0.000**	**0.000**
CDMA2000 BC1_UAT	Front	0.166	0.122	0.003	**0.288**	**0.169**
	Back	0.187	0.618	0.585	**0.805**	**0.772**
	Left side	0.034			**0.034**	**0.034**
	Right side	0.024	0.238	0.674	**0.262**	**0.698**
	Top side	0.307	0.158	0.108	**0.465**	**0.415**
	Bottom side				**0.000**	**0.000**
LTE Band 71_UAT	Front	0.456	0.122	0.003	**0.578**	**0.459**
	Back	0.535	0.618	0.585	**1.153**	**1.120**
	Left side	0.655			**0.655**	**0.655**

	Right side	0.137	0.238	0.674	**0.375**	**0.811**
	Top side	0.024	0.158	0.108	**0.182**	**0.132**
	Bottom side				**0.000**	**0.000**
LTE Band 12_UAT	Front	0.621	0.122	0.003	**0.743**	**0.624**
	Back	0.641	0.618	0.585	**1.259**	**1.226**
	Left side	0.890			**0.890**	**0.890**
	Right side	0.048	0.238	0.674	**0.286**	**0.722**
	Top side	0.012	0.158	0.108	**0.170**	**0.120**
	Bottom side				**0.000**	**0.000**
LTE Band 13_UAT	Front	0.472	0.122	0.003	**0.594**	**0.475**
	Back	0.519	0.618	0.585	**1.137**	**1.104**
	Left side	0.764			**0.764**	**0.764**
	Right side	0.031	0.238	0.674	**0.269**	**0.705**
	Top side	0.069	0.158	0.108	**0.227**	**0.177**
	Bottom side				**0.000**	**0.000**
LTE Band 5_UAT	Front	0.619	0.122	0.003	**0.741**	**0.622**
	Back	0.617	0.618	0.585	**1.235**	**1.202**
	Left side	0.882			**0.882**	**0.882**
	Right side	0.020	0.238	0.674	**0.258**	**0.694**
	Top side	0.014	0.158	0.108	**0.172**	**0.122**
	Bottom side				**0.000**	**0.000**
LTE Band 26_UAT	Front	0.466	0.122	0.003	**0.588**	**0.469**
	Back	0.501	0.618	0.585	**1.119**	**1.086**
	Left side	0.838			**0.838**	**0.838**
	Right side	0.020	0.238	0.674	**0.258**	**0.694**
	Top side	0.009	0.158	0.108	**0.167**	**0.117**
	Bottom side				**0.000**	**0.000**
LTE Band 66_UAT	Front	0.515	0.122	0.003	**0.637**	**0.518**
	Back	0.555	0.618	0.585	**1.173**	**1.140**
	Left side	0.163			**0.163**	**0.163**
	Right side	0.001	0.238	0.674	**0.239**	**0.675**
	Top side	0.918	0.158	0.108	**1.076**	**1.026**
	Bottom side				**0.000**	**0.000**
LTE Band 25_UAT	Front	0.388	0.122	0.003	**0.510**	**0.391**
	Back	0.466	0.618	0.585	**1.084**	**1.051**
	Left side	0.096			**0.096**	**0.096**
	Right side	0.001	0.238	0.674	**0.239**	**0.675**
	Top side	0.653	0.158	0.108	**0.811**	**0.761**
	Bottom side				**0.000**	**0.000**
LTE Band 30_UAT	Front	0.474	0.122	0.003	**0.596**	**0.477**
	Back	0.560	0.618	0.585	**1.178**	**1.145**
	Left side	0.115			**0.115**	**0.115**
	Right side	0.001	0.238	0.674	**0.239**	**0.675**
	Top side	0.919	0.158	0.108	**1.077**	**1.027**
	Bottom side				**0.000**	**0.000**
LTE Band 7_UAT	Front	0.417	0.122	0.003	**0.539**	**0.420**
	Back	0.444	0.618	0.585	**1.062**	**1.029**
	Left side	0.001			**0.001**	**0.001**
	Right side	0.001	0.238	0.674	**0.239**	**0.675**
	Top side	0.919	0.158	0.108	**1.077**	**1.027**
	Bottom side				**0.000**	**0.000**
LTE Band 41_UAT	Front	0.162	0.122	0.003	**0.284**	**0.165**
	Back	0.272	0.618	0.585	**0.890**	**0.857**
	Left side	0.001			**0.001**	**0.001**
	Right side	0.001	0.238	0.674	**0.239**	**0.675**
	Top side	0.792	0.158	0.108	**0.950**	**0.900**

	Bottom side				**0.000**	**0.000**
LTE Band 41(HPUE)_UAT	Front	0.187	0.122	0.003	**0.309**	**0.190**
	Back	0.337	0.618	0.585	**0.955**	**0.922**
	Left side	0.001			**0.001**	**0.001**
	Right side	0.001	0.238	0.674	**0.239**	**0.675**
	Top side	0.920	0.158	0.108	**1.078**	**1.028**
	Bottom side				**0.000**	**0.000**
LTE Band 48_UAT	Front	0.267	0.122	0.003	**0.389**	**0.270**
	Back	0.429	0.618	0.585	**1.047**	**1.014**
	Left side	0.100			**0.100**	**0.100**
	Right side	0.061	0.238	0.674	**0.299**	**0.735**
	Top side	0.728	0.158	0.108	**0.886**	**0.836**
	Bottom side				**0.000**	**0.000**

WWAN Band	Exposure Position	1	2	4	6	7	1+2+4 Summed 1g SAR (W/kg)	1+4+6 Summed 1g SAR (W/kg)	1+4+7 Summed 1g SAR (W/kg)
		WWAN	2.4GHz WLAN	5GHz WLAN	Bluetooth Chain 0	Bluetooth Chain 1			
		1g SAR (W/kg)	1g SAR (W/kg)	1g SAR (W/kg)	1g SAR (W/kg)	1g SAR (W/kg)			
GSM850_UAT	Front	0.432	0.061	0.002	0.048	0.041	**0.495**	**0.482**	**0.475**
	Back	0.499	0.314	0.343	0.197	0.190	**1.156**	**1.039**	**1.032**
	Left side	0.852					**0.852**	**0.852**	**0.852**
	Right side	0.015	0.120	0.420	0.127	0.133	**0.555**	**0.562**	**0.568**
	Top side	0.017	0.081	0.068	0.309	0.054	**0.166**	**0.394**	**0.139**
	Bottom side						**0.000**	**0.000**	**0.000**
GSM1900_UAT	Front	0.245	0.061	0.002	0.048	0.041	**0.308**	**0.295**	**0.288**
	Back	0.231	0.314	0.343	0.197	0.190	**0.888**	**0.771**	**0.764**
	Left side	0.001					**0.001**	**0.001**	**0.001**
	Right side	0.001	0.120	0.420	0.127	0.133	**0.541**	**0.548**	**0.554**
	Top side	0.454	0.081	0.068	0.309	0.054	**0.603**	**0.831**	**0.576**
	Bottom side						**0.000**	**0.000**	**0.000**
WCDMA V_UAT	Front	0.481	0.061	0.002	0.048	0.041	**0.544**	**0.531**	**0.524**
	Back	0.581	0.314	0.343	0.197	0.190	**1.238**	**1.121**	**1.114**
	Left side	0.862					**0.862**	**0.862**	**0.862**
	Right side	0.022	0.120	0.420	0.127	0.133	**0.562**	**0.569**	**0.575**
	Top side	0.016	0.081	0.068	0.309	0.054	**0.165**	**0.393**	**0.138**
	Bottom side						**0.000**	**0.000**	**0.000**
WCDMA IV_UAT	Front	0.536	0.061	0.002	0.048	0.041	**0.599**	**0.586**	**0.579**
	Back	0.610	0.314	0.343	0.197	0.190	**1.267**	**1.150**	**1.143**
	Left side	0.208					**0.208**	**0.208**	**0.208**
	Right side	0.001	0.120	0.420	0.127	0.133	**0.541**	**0.548**	**0.554**
	Top side	0.823	0.081	0.068	0.309	0.054	**0.972**	**1.200**	**0.945**
	Bottom side						**0.000**	**0.000**	**0.000**
WCDMA II_UAT	Front	0.414	0.061	0.002	0.048	0.041	**0.477**	**0.464**	**0.457**
	Back	0.570	0.314	0.343	0.197	0.190	**1.227**	**1.110**	**1.103**
	Left side	0.127					**0.127**	**0.127**	**0.127**
	Right side	0.074	0.120	0.420	0.127	0.133	**0.614**	**0.621**	**0.627**
	Top side	0.843	0.081	0.068	0.309	0.054	**0.992**	**1.220**	**0.965**
	Bottom side						**0.000**	**0.000**	**0.000**
CDMA2000 BC0_UAT	Front	0.405	0.061	0.002	0.048	0.041	**0.468**	**0.455**	**0.448**
	Back	0.439	0.314	0.343	0.197	0.190	**1.096**	**0.979**	**0.972**
	Left side	0.719					**0.719**	**0.719**	**0.719**
	Right side	0.023	0.120	0.420	0.127	0.133	**0.563**	**0.570**	**0.576**
	Top side	0.018	0.081	0.068	0.309	0.054	**0.167**	**0.395**	**0.140**
	Bottom side						**0.000**	**0.000**	**0.000**
CDMA2000 BC10_UAT	Front	0.436	0.061	0.002	0.048	0.041	**0.499**	**0.486**	**0.479**
	Back	0.488	0.314	0.343	0.197	0.190	**1.145**	**1.028**	**1.021**
	Left side	0.726					**0.726**	**0.726**	**0.726**

	Right side	0.026	0.120	0.420	0.127	0.133	**0.566**	**0.573**	**0.579**
	Top side	0.019	0.081	0.068	0.309	0.054	**0.168**	**0.396**	**0.141**
	Bottom side						**0.000**	**0.000**	**0.000**
CDMA2000 BC1_UAT	Front	0.166	0.061	0.002	0.048	0.041	**0.229**	**0.216**	**0.209**
	Back	0.187	0.314	0.343	0.197	0.190	**0.844**	**0.727**	**0.720**
	Left side	0.034					**0.034**	**0.034**	**0.034**
	Right side	0.024	0.120	0.420	0.127	0.133	**0.564**	**0.571**	**0.577**
	Top side	0.307	0.081	0.068	0.309	0.054	**0.456**	**0.684**	**0.429**
	Bottom side						**0.000**	**0.000**	**0.000**
LTE Band 71_UAT	Front	0.456	0.061	0.002	0.048	0.041	**0.519**	**0.506**	**0.499**
	Back	0.535	0.314	0.343	0.197	0.190	**1.192**	**1.075**	**1.068**
	Left side	0.655					**0.655**	**0.655**	**0.655**
	Right side	0.137	0.120	0.420	0.127	0.133	**0.677**	**0.684**	**0.690**
	Top side	0.024	0.081	0.068	0.309	0.054	**0.173**	**0.401**	**0.146**
	Bottom side						**0.000**	**0.000**	**0.000**
LTE Band 12_UAT	Front	0.621	0.061	0.002	0.048	0.041	**0.684**	**0.671**	**0.664**
	Back	0.641	0.314	0.343	0.197	0.190	**1.298**	**1.181**	**1.174**
	Left side	0.890					**0.890**	**0.890**	**0.890**
	Right side	0.048	0.120	0.420	0.127	0.133	**0.588**	**0.595**	**0.601**
	Top side	0.012	0.081	0.068	0.309	0.054	**0.161**	**0.389**	**0.134**
	Bottom side						**0.000**	**0.000**	**0.000**
LTE Band 13_UAT	Front	0.472	0.061	0.002	0.048	0.041	**0.535**	**0.522**	**0.515**
	Back	0.519	0.314	0.343	0.197	0.190	**1.176**	**1.059**	**1.052**
	Left side	0.764					**0.764**	**0.764**	**0.764**
	Right side	0.031	0.120	0.420	0.127	0.133	**0.571**	**0.578**	**0.584**
	Top side	0.069	0.081	0.068	0.309	0.054	**0.218**	**0.446**	**0.191**
	Bottom side						**0.000**	**0.000**	**0.000**
LTE Band 5_UAT	Front	0.619	0.061	0.002	0.048	0.041	**0.682**	**0.669**	**0.662**
	Back	0.617	0.314	0.343	0.197	0.190	**1.274**	**1.157**	**1.150**
	Left side	0.882					**0.882**	**0.882**	**0.882**
	Right side	0.020	0.120	0.420	0.127	0.133	**0.560**	**0.567**	**0.573**
	Top side	0.014	0.081	0.068	0.309	0.054	**0.163**	**0.391**	**0.136**
	Bottom side						**0.000**	**0.000**	**0.000**
LTE Band 26_UAT	Front	0.466	0.061	0.002	0.048	0.041	**0.529**	**0.516**	**0.509**
	Back	0.501	0.314	0.343	0.197	0.190	**1.158**	**1.041**	**1.034**
	Left side	0.838					**0.838**	**0.838**	**0.838**
	Right side	0.020	0.120	0.420	0.127	0.133	**0.560**	**0.567**	**0.573**
	Top side	0.009	0.081	0.068	0.309	0.054	**0.158**	**0.386**	**0.131**
	Bottom side						**0.000**	**0.000**	**0.000**
LTE Band 66_UAT	Front	0.515	0.061	0.002	0.048	0.041	**0.578**	**0.565**	**0.558**
	Back	0.555	0.314	0.343	0.197	0.190	**1.212**	**1.095**	**1.088**
	Left side	0.163					**0.163**	**0.163**	**0.163**
	Right side	0.001	0.120	0.420	0.127	0.133	**0.541**	**0.548**	**0.554**
	Top side	0.918	0.081	0.068	0.309	0.054	**1.067**	**1.295**	**1.040**
	Bottom side						**0.000**	**0.000**	**0.000**
LTE Band 25_UAT	Front	0.388	0.061	0.002	0.048	0.041	**0.451**	**0.438**	**0.431**
	Back	0.466	0.314	0.343	0.197	0.190	**1.123**	**1.006**	**0.999**
	Left side	0.096					**0.096**	**0.096**	**0.096**
	Right side	0.001	0.120	0.420	0.127	0.133	**0.541**	**0.548**	**0.554**
	Top side	0.653	0.081	0.068	0.309	0.054	**0.802**	**1.030**	**0.775**
	Bottom side						**0.000**	**0.000**	**0.000**
LTE Band 30_UAT	Front	0.474	0.061	0.002	0.048	0.041	**0.537**	**0.524**	**0.517**
	Back	0.560	0.314	0.343	0.197	0.190	**1.217**	**1.100**	**1.093**
	Left side	0.115					**0.115**	**0.115**	**0.115**
	Right side	0.001	0.120	0.420	0.127	0.133	**0.541**	**0.548**	**0.554**
	Top side	0.919	0.081	0.068	0.309	0.054	**1.068**	**1.296**	**1.041**

	Bottom side						**0.000**	**0.000**	**0.000**
LTE Band 7_UAT	Front	0.417	0.061	0.002	0.048	0.041	**0.480**	**0.467**	**0.460**
	Back	0.444	0.314	0.343	0.197	0.190	**1.101**	**0.984**	**0.977**
	Left side	0.001					**0.001**	**0.001**	**0.001**
	Right side	0.001	0.120	0.420	0.127	0.133	**0.541**	**0.548**	**0.554**
	Top side	0.919	0.081	0.068	0.309	0.054	**1.068**	**1.296**	**1.041**
	Bottom side						**0.000**	**0.000**	**0.000**
LTE Band 41_UAT	Front	0.162	0.061	0.002	0.048	0.041	**0.225**	**0.212**	**0.205**
	Back	0.272	0.314	0.343	0.197	0.190	**0.929**	**0.812**	**0.805**
	Left side	0.001					**0.001**	**0.001**	**0.001**
	Right side	0.001	0.120	0.420	0.127	0.133	**0.541**	**0.548**	**0.554**
	Top side	0.792	0.081	0.068	0.309	0.054	**0.941**	**1.169**	**0.914**
	Bottom side						**0.000**	**0.000**	**0.000**
LTE Band 41(HPUE)_UAT	Front	0.187	0.061	0.002	0.048	0.041	**0.250**	**0.237**	**0.230**
	Back	0.337	0.314	0.343	0.197	0.190	**0.994**	**0.877**	**0.870**
	Left side	0.001					**0.001**	**0.001**	**0.001**
	Right side	0.001	0.120	0.420	0.127	0.133	**0.541**	**0.548**	**0.554**
	Top side	0.920	0.081	0.068	0.309	0.054	**1.069**	**1.297**	**1.042**
	Bottom side						**0.000**	**0.000**	**0.000**
LTE Band 48_UAT	Front	0.267	0.061	0.002	0.048	0.041	**0.330**	**0.317**	**0.310**
	Back	0.429	0.314	0.343	0.197	0.190	**1.086**	**0.969**	**0.962**
	Left side	0.100					**0.100**	**0.100**	**0.100**
	Right side	0.061	0.120	0.420	0.127	0.133	**0.601**	**0.608**	**0.614**
	Top side	0.728	0.081	0.068	0.309	0.054	**0.877**	**1.105**	**0.850**
	Bottom side						**0.000**	**0.000**	**0.000**

WWAN Band	Exposure Position	1	2	4	1+2 Summed 1g SAR (W/kg)	1+4 Summed 1g SAR (W/kg)
		WWAN	2.4GHz WLAN	5GHz WLAN		
		1g SAR (W/kg)	1g SAR (W/kg)	1g SAR (W/kg)		
GSM850_LAT	Front	0.312	0.122	0.003	**0.434**	**0.315**
	Back	0.422	0.618	0.585	**1.040**	**1.007**
	Left side	0.022			**0.022**	**0.022**
	Right side	0.094	0.238	0.674	**0.332**	**0.768**
	Top side		0.158	0.108	**0.158**	**0.108**
	Bottom side	0.236			**0.236**	**0.236**
GSM1900_LAT	Front	0.389	0.122	0.003	**0.511**	**0.392**
	Back	0.457	0.618	0.585	**1.075**	**1.042**
	Left side	0.082			**0.082**	**0.082**
	Right side	0.097	0.238	0.674	**0.335**	**0.771**
	Top side		0.158	0.108	**0.158**	**0.108**
	Bottom side	0.639			**0.639**	**0.639**
WCDMA V_LAT	Front	0.332	0.122	0.003	**0.454**	**0.335**
	Back	0.509	0.618	0.585	**1.127**	**1.094**
	Left side	0.237			**0.237**	**0.237**
	Right side	0.256	0.238	0.674	**0.494**	**0.930**
	Top side		0.158	0.108	**0.158**	**0.108**
	Bottom side	0.268			**0.268**	**0.268**
WCDMA IV_LAT	Front	0.577	0.122	0.003	**0.699**	**0.580**
	Back	0.653	0.618	0.585	**1.271**	**1.238**
	Left side	0.187			**0.187**	**0.187**
	Right side	0.117	0.238	0.674	**0.355**	**0.791**
	Top side		0.158	0.108	**0.158**	**0.108**
	Bottom side	0.880			**0.880**	**0.880**
WCDMA II_LAT	Front	0.363	0.122	0.003	**0.485**	**0.366**
	Back	0.437	0.618	0.585	**1.055**	**1.022**
	Left side	0.074			**0.074**	**0.074**

	Right side	0.105	0.238	0.674	**0.343**	**0.779**
	Top side		0.158	0.108	**0.158**	**0.108**
	Bottom side	0.576			**0.576**	**0.576**
CDMA2000 BC0_LAT	Front	0.356	0.122	0.003	**0.478**	**0.359**
	Back	0.518	0.618	0.585	**1.136**	**1.103**
	Left side	0.191			**0.191**	**0.191**
	Right side	0.261	0.238	0.674	**0.499**	**0.935**
	Top side		0.158	0.108	**0.158**	**0.108**
	Bottom side	0.253			**0.253**	**0.253**
CDMA2000 BC10_LAT	Front	0.340	0.122	0.003	**0.462**	**0.343**
	Back	0.499	0.618	0.585	**1.117**	**1.084**
	Left side	0.183			**0.183**	**0.183**
	Right side	0.234	0.238	0.674	**0.472**	**0.908**
	Top side		0.158	0.108	**0.158**	**0.108**
	Bottom side	0.222			**0.222**	**0.222**
CDMA2000 BC1_LAT	Front	0.501	0.122	0.003	**0.623**	**0.504**
	Back	0.638	0.618	0.585	**1.256**	**1.223**
	Left side	0.100			**0.100**	**0.100**
	Right side	0.135	0.238	0.674	**0.373**	**0.809**
	Top side		0.158	0.108	**0.158**	**0.108**
	Bottom side	0.817			**0.817**	**0.817**
LTE Band 71_LAT	Front	0.263	0.122	0.003	**0.385**	**0.266**
	Back	0.399	0.618	0.585	**1.017**	**0.984**
	Left side	0.214			**0.214**	**0.214**
	Right side	0.278	0.238	0.674	**0.516**	**0.952**
	Top side		0.158	0.108	**0.158**	**0.108**
	Bottom side	0.154			**0.154**	**0.154**
LTE Band 12_LAT	Front	0.296	0.122	0.003	**0.418**	**0.299**
	Back	0.563	0.618	0.585	**1.181**	**1.148**
	Left side	0.275			**0.275**	**0.275**
	Right side	0.232	0.238	0.674	**0.470**	**0.906**
	Top side		0.158	0.108	**0.158**	**0.108**
	Bottom side	0.188			**0.188**	**0.188**
LTE Band 13_LAT	Front	0.299	0.122	0.003	**0.421**	**0.302**
	Back	0.387	0.618	0.585	**1.005**	**0.972**
	Left side	0.228			**0.228**	**0.228**
	Right side	0.196	0.238	0.674	**0.434**	**0.870**
	Top side		0.158	0.108	**0.158**	**0.108**
	Bottom side	0.175			**0.175**	**0.175**
LTE Band 5_LAT	Front	0.334	0.122	0.003	**0.456**	**0.337**
	Back	0.414	0.618	0.585	**1.032**	**0.999**
	Left side	0.172			**0.172**	**0.172**
	Right side	0.210	0.238	0.674	**0.448**	**0.884**
	Top side		0.158	0.108	**0.158**	**0.108**
	Bottom side	0.259			**0.259**	**0.259**
LTE Band 26_LAT	Front	0.382	0.122	0.003	**0.504**	**0.385**
	Back	0.536	0.618	0.585	**1.154**	**1.121**
	Left side	0.186			**0.186**	**0.186**
	Right side	0.221	0.238	0.674	**0.459**	**0.895**
	Top side		0.158	0.108	**0.158**	**0.108**
	Bottom side	0.196			**0.196**	**0.196**
LTE Band 66_LAT	Front	0.463	0.122	0.003	**0.585**	**0.466**
	Back	0.711	0.618	0.585	**1.329**	**1.296**
	Left side	0.171			**0.171**	**0.171**
	Right side	0.098	0.238	0.674	**0.336**	**0.772**
	Top side		0.158	0.108	**0.158**	**0.108**

	Bottom side	0.874			**0.874**	**0.874**
LTE Band 25_LAT	Front	0.316	0.122	0.003	**0.438**	**0.319**
	Back	0.470	0.618	0.585	**1.088**	**1.055**
	Left side	0.054			**0.054**	**0.054**
	Right side	0.079	0.238	0.674	**0.317**	**0.753**
	Top side		0.158	0.108	**0.158**	**0.108**
	Bottom side	0.517			**0.517**	**0.517**
LTE Band 30_LAT	Front	0.372	0.122	0.003	**0.494**	**0.375**
	Back	0.552	0.618	0.585	**1.170**	**1.137**
	Left side	0.120			**0.120**	**0.120**
	Right side	0.077	0.238	0.674	**0.315**	**0.751**
	Top side		0.158	0.108	**0.158**	**0.108**
	Bottom side	0.349			**0.349**	**0.349**
LTE Band 7_LAT	Front	0.279	0.122	0.003	**0.401**	**0.282**
	Back	0.552	0.618	0.585	**1.170**	**1.137**
	Left side	0.103			**0.103**	**0.103**
	Right side	0.073	0.238	0.674	**0.311**	**0.747**
	Top side		0.158	0.108	**0.158**	**0.108**
	Bottom side	0.340			**0.340**	**0.340**
LTE Band 41_LAT	Front	0.281	0.122	0.003	**0.403**	**0.284**
	Back	0.576	0.618	0.585	**1.194**	**1.161**
	Left side	0.089			**0.089**	**0.089**
	Right side	0.085	0.238	0.674	**0.323**	**0.759**
	Top side		0.158	0.108	**0.158**	**0.108**
	Bottom side	0.302			**0.302**	**0.302**
LTE Band 41(HPUE)_LAT	Front	0.395	0.122	0.003	**0.517**	**0.398**
	Back	0.713	0.618	0.585	**1.331**	**1.298**
	Left side	0.120			**0.120**	**0.120**
	Right side	0.118	0.238	0.674	**0.356**	**0.792**
	Top side		0.158	0.108	**0.158**	**0.108**
	Bottom side	0.397			**0.397**	**0.397**

WWAN Band	Exposure Position	1	2	4	6	7	1+2+4 Summed 1g SAR (W/kg)	1+4+6 Summed 1g SAR (W/kg)	1+4+7 Summed 1g SAR (W/kg)
		WWAN	2.4GHz WLAN	5GHz WLAN	Bluetooth Chain 0	Bluetooth Chain 1			
		1g SAR (W/kg)	1g SAR (W/kg)	1g SAR (W/kg)	1g SAR (W/kg)	1g SAR (W/kg)			
GSM850_LAT	Front	0.312	0.061	0.002	0.048	0.041	**0.375**	**0.362**	**0.355**
	Back	0.422	0.314	0.343	0.197	0.190	**1.079**	**0.962**	**0.955**
	Left side	0.022					**0.022**	**0.022**	**0.022**
	Right side	0.094	0.120	0.420	0.127	0.133	**0.634**	**0.641**	**0.647**
	Top side		0.081	0.068	0.309	0.054	**0.149**	**0.377**	**0.122**
	Bottom side	0.236					**0.236**	**0.236**	**0.236**
GSM1900_LAT	Front	0.389	0.061	0.002	0.048	0.041	**0.452**	**0.439**	**0.432**
	Back	0.457	0.314	0.343	0.197	0.190	**1.114**	**0.997**	**0.990**
	Left side	0.082					**0.082**	**0.082**	**0.082**
	Right side	0.097	0.120	0.420	0.127	0.133	**0.637**	**0.644**	**0.650**
	Top side		0.081	0.068	0.309	0.054	**0.149**	**0.377**	**0.122**
	Bottom side	0.639					**0.639**	**0.639**	**0.639**
WCDMA V_LAT	Front	0.332	0.061	0.002	0.048	0.041	**0.395**	**0.382**	**0.375**
	Back	0.509	0.314	0.343	0.197	0.190	**1.166**	**1.049**	**1.042**
	Left side	0.237					**0.237**	**0.237**	**0.237**
	Right side	0.256	0.120	0.420	0.127	0.133	**0.796**	**0.803**	**0.809**
	Top side		0.081	0.068	0.309	0.054	**0.149**	**0.377**	**0.122**
	Bottom side	0.268					**0.268**	**0.268**	**0.268**
WCDMA IV_LAT	Front	0.577	0.061	0.002	0.048	0.041	**0.640**	**0.627**	**0.620**
	Back	0.653	0.314	0.343	0.197	0.190	**1.310**	**1.193**	**1.186**

	Left side	0.187					**0.187**	**0.187**	**0.187**
	Right side	0.117	0.120	0.420	0.127	0.133	**0.657**	**0.664**	**0.670**
	Top side		0.081	0.068	0.309	0.054	**0.149**	**0.377**	**0.122**
	Bottom side	0.880					**0.880**	**0.880**	**0.880**
WCDMA II_LAT	Front	0.363	0.061	0.002	0.048	0.041	**0.426**	**0.413**	**0.406**
	Back	0.437	0.314	0.343	0.197	0.190	**1.094**	**0.977**	**0.970**
	Left side	0.074					**0.074**	**0.074**	**0.074**
	Right side	0.105	0.120	0.420	0.127	0.133	**0.645**	**0.652**	**0.658**
	Top side		0.081	0.068	0.309	0.054	**0.149**	**0.377**	**0.122**
	Bottom side	0.576					**0.576**	**0.576**	**0.576**
CDMA2000 BC0_LAT	Front	0.356	0.061	0.002	0.048	0.041	**0.419**	**0.406**	**0.399**
	Back	0.518	0.314	0.343	0.197	0.190	**1.175**	**1.058**	**1.051**
	Left side	0.191					**0.191**	**0.191**	**0.191**
	Right side	0.261	0.120	0.420	0.127	0.133	**0.801**	**0.808**	**0.814**
	Top side		0.081	0.068	0.309	0.054	**0.149**	**0.377**	**0.122**
	Bottom side	0.253					**0.253**	**0.253**	**0.253**
CDMA2000 BC10_LAT	Front	0.340	0.061	0.002	0.048	0.041	**0.403**	**0.390**	**0.383**
	Back	0.499	0.314	0.343	0.197	0.190	**1.156**	**1.039**	**1.032**
	Left side	0.183					**0.183**	**0.183**	**0.183**
	Right side	0.234	0.120	0.420	0.127	0.133	**0.774**	**0.781**	**0.787**
	Top side		0.081	0.068	0.309	0.054	**0.149**	**0.377**	**0.122**
	Bottom side	0.222					**0.222**	**0.222**	**0.222**
CDMA2000 BC1_LAT	Front	0.501	0.061	0.002	0.048	0.041	**0.564**	**0.551**	**0.544**
	Back	0.638	0.314	0.343	0.197	0.190	**1.295**	**1.178**	**1.171**
	Left side	0.100					**0.100**	**0.100**	**0.100**
	Right side	0.135	0.120	0.420	0.127	0.133	**0.675**	**0.682**	**0.688**
	Top side		0.081	0.068	0.309	0.054	**0.149**	**0.377**	**0.122**
	Bottom side	0.817					**0.817**	**0.817**	**0.817**
LTE Band 71_LAT	Front	0.263	0.061	0.002	0.048	0.041	**0.326**	**0.313**	**0.306**
	Back	0.399	0.314	0.343	0.197	0.190	**1.056**	**0.939**	**0.932**
	Left side	0.214					**0.214**	**0.214**	**0.214**
	Right side	0.278	0.120	0.420	0.127	0.133	**0.818**	**0.825**	**0.831**
	Top side		0.081	0.068	0.309	0.054	**0.149**	**0.377**	**0.122**
	Bottom side	0.154					**0.154**	**0.154**	**0.154**
LTE Band 12_LAT	Front	0.296	0.061	0.002	0.048	0.041	**0.359**	**0.346**	**0.339**
	Back	0.563	0.314	0.343	0.197	0.190	**1.220**	**1.103**	**1.096**
	Left side	0.275					**0.275**	**0.275**	**0.275**
	Right side	0.232	0.120	0.420	0.127	0.133	**0.772**	**0.779**	**0.785**
	Top side		0.081	0.068	0.309	0.054	**0.149**	**0.377**	**0.122**
	Bottom side	0.188					**0.188**	**0.188**	**0.188**
LTE Band 13_LAT	Front	0.299	0.061	0.002	0.048	0.041	**0.362**	**0.349**	**0.342**
	Back	0.387	0.314	0.343	0.197	0.190	**1.044**	**0.927**	**0.920**
	Left side	0.228					**0.228**	**0.228**	**0.228**
	Right side	0.196	0.120	0.420	0.127	0.133	**0.736**	**0.743**	**0.749**
	Top side		0.081	0.068	0.309	0.054	**0.149**	**0.377**	**0.122**
	Bottom side	0.175					**0.175**	**0.175**	**0.175**
LTE Band 5_LAT	Front	0.334	0.061	0.002	0.048	0.041	**0.397**	**0.384**	**0.377**
	Back	0.414	0.314	0.343	0.197	0.190	**1.071**	**0.954**	**0.947**
	Left side	0.172					**0.172**	**0.172**	**0.172**
	Right side	0.210	0.120	0.420	0.127	0.133	**0.750**	**0.757**	**0.763**
	Top side		0.081	0.068	0.309	0.054	**0.149**	**0.377**	**0.122**
	Bottom side	0.259					**0.259**	**0.259**	**0.259**
LTE Band 26_LAT	Front	0.382	0.061	0.002	0.048	0.041	**0.445**	**0.432**	**0.425**
	Back	0.536	0.314	0.343	0.197	0.190	**1.193**	**1.076**	**1.069**
	Left side	0.186					**0.186**	**0.186**	**0.186**
	Right side	0.221	0.120	0.420	0.127	0.133	**0.761**	**0.768**	**0.774**

	Top side		0.081	0.068	0.309	0.054	**0.149**	**0.377**	**0.122**
	Bottom side	0.196					**0.196**	**0.196**	**0.196**
LTE Band 66_LAT	Front	0.463	0.061	0.002	0.048	0.041	**0.526**	**0.513**	**0.506**
	Back	0.711	0.314	0.343	0.197	0.190	**1.368**	**1.251**	**1.244**
	Left side	0.171					**0.171**	**0.171**	**0.171**
	Right side	0.098	0.120	0.420	0.127	0.133	**0.638**	**0.645**	**0.651**
	Top side		0.081	0.068	0.309	0.054	**0.149**	**0.377**	**0.122**
	Bottom side	0.874					**0.874**	**0.874**	**0.874**
LTE Band 25_LAT	Front	0.316	0.061	0.002	0.048	0.041	**0.379**	**0.366**	**0.359**
	Back	0.470	0.314	0.343	0.197	0.190	**1.127**	**1.010**	**1.003**
	Left side	0.054					**0.054**	**0.054**	**0.054**
	Right side	0.079	0.120	0.420	0.127	0.133	**0.619**	**0.626**	**0.632**
	Top side		0.081	0.068	0.309	0.054	**0.149**	**0.377**	**0.122**
	Bottom side	0.517					**0.517**	**0.517**	**0.517**
LTE Band 30_LAT	Front	0.372	0.061	0.002	0.048	0.041	**0.435**	**0.422**	**0.415**
	Back	0.552	0.314	0.343	0.197	0.190	**1.209**	**1.092**	**1.085**
	Left side	0.120					**0.120**	**0.120**	**0.120**
	Right side	0.077	0.120	0.420	0.127	0.133	**0.617**	**0.624**	**0.630**
	Top side		0.081	0.068	0.309	0.054	**0.149**	**0.377**	**0.122**
	Bottom side	0.349					**0.349**	**0.349**	**0.349**
LTE Band 7_LAT	Front	0.279	0.061	0.002	0.048	0.041	**0.342**	**0.329**	**0.322**
	Back	0.552	0.314	0.343	0.197	0.190	**1.209**	**1.092**	**1.085**
	Left side	0.103					**0.103**	**0.103**	**0.103**
	Right side	0.073	0.120	0.420	0.127	0.133	**0.613**	**0.620**	**0.626**
	Top side		0.081	0.068	0.309	0.054	**0.149**	**0.377**	**0.122**
	Bottom side	0.340					**0.340**	**0.340**	**0.340**
LTE Band 41_LAT	Front	0.281	0.061	0.002	0.048	0.041	**0.344**	**0.331**	**0.324**
	Back	0.576	0.314	0.343	0.197	0.190	**1.233**	**1.116**	**1.109**
	Left side	0.089					**0.089**	**0.089**	**0.089**
	Right side	0.085	0.120	0.420	0.127	0.133	**0.625**	**0.632**	**0.638**
	Top side		0.081	0.068	0.309	0.054	**0.149**	**0.377**	**0.122**
	Bottom side	0.302					**0.302**	**0.302**	**0.302**
LTE Band 41(HPUE)_LAT	Front	0.395	0.061	0.002	0.048	0.041	**0.458**	**0.445**	**0.438**
	Back	0.713	0.314	0.343	0.197	0.190	**1.370**	**1.253**	**1.246**
	Left side	0.120					**0.120**	**0.120**	**0.120**
	Right side	0.118	0.120	0.420	0.127	0.133	**0.658**	**0.665**	**0.671**
	Top side		0.081	0.068	0.309	0.054	**0.149**	**0.377**	**0.122**
	Bottom side	0.397					**0.397**	**0.397**	**0.397**

18.3 Body-Worn Accessory Exposure Conditions

WWAN Band	Exposure Position	1	2	4	1+2 Summed 1g SAR (W/kg)	1+4 Summed 1g SAR (W/kg)
		WWAN	2.4GHz WLAN	5GHz WLAN		
		1g SAR (W/kg)	1g SAR (W/kg)	1g SAR (W/kg)		
GSM850_UAT	Front	0.311	0.086	0.099	**0.397**	**0.410**
	Back	0.420	0.547	0.697	**0.967**	**1.117**
GSM1900_UAT	Front	0.290	0.086	0.099	**0.376**	**0.389**
	Back	0.320	0.547	0.697	**0.867**	**1.017**
WCDMA V_UAT	Front	0.170	0.086	0.099	**0.256**	**0.269**
	Back	0.400	0.547	0.697	**0.947**	**1.097**
WCDMA IV_UAT	Front	0.384	0.086	0.099	**0.470**	**0.483**
	Back	0.454	0.547	0.697	**1.001**	**1.151**
WCDMA II_UAT	Front	0.369	0.086	0.099	**0.455**	**0.468**
	Back	0.417	0.547	0.697	**0.964**	**1.114**
CDMA2000 BC0_UAT	Front	0.196	0.086	0.099	**0.282**	**0.295**
	Back	0.258	0.547	0.697	**0.805**	**0.955**
CDMA2000 BC10_UAT	Front	0.155	0.086	0.099	**0.241**	**0.254**
	Back	0.198	0.547	0.697	**0.745**	**0.895**
CDMA2000 BC1_UAT	Front	0.096	0.086	0.099	**0.182**	**0.195**
	Back	0.109	0.547	0.697	**0.656**	**0.806**
LTE Band 71_UAT	Front	0.240	0.086	0.099	**0.326**	**0.339**
	Back	0.286	0.547	0.697	**0.833**	**0.983**
LTE Band 12_UAT	Front	0.345	0.086	0.099	**0.431**	**0.444**
	Back	0.384	0.547	0.697	**0.931**	**1.081**
LTE Band 13_UAT	Front	0.353	0.086	0.099	**0.439**	**0.452**
	Back	0.408	0.547	0.697	**0.955**	**1.105**
LTE Band 5_UAT	Front	0.309	0.086	0.099	**0.395**	**0.408**
	Back	0.379	0.547	0.697	**0.926**	**1.076**
LTE Band 26_UAT	Front	0.340	0.086	0.099	**0.426**	**0.439**
	Back	0.424	0.547	0.697	**0.971**	**1.121**
LTE Band 66_UAT	Front	0.219	0.086	0.099	**0.305**	**0.318**
	Back	0.313	0.547	0.697	**0.860**	**1.010**
LTE Band 25_UAT	Front	0.353	0.086	0.099	**0.439**	**0.452**
	Back	0.462	0.547	0.697	**1.009**	**1.159**
LTE Band 30_UAT	Front	0.408	0.086	0.099	**0.494**	**0.507**
	Back	0.457	0.547	0.697	**1.004**	**1.154**
LTE Band 7_UAT	Front	0.404	0.086	0.099	**0.490**	**0.503**
	Back	0.480	0.547	0.697	**1.027**	**1.177**
LTE Band 41_UAT	Front	0.220	0.086	0.099	**0.306**	**0.319**
	Back	0.420	0.547	0.697	**0.967**	**1.117**
LTE Band 41(HPUE)_UAT	Front	0.286	0.086	0.099	**0.372**	**0.385**
	Back	0.385	0.547	0.697	**0.932**	**1.082**
LTE Band 48_UAT	Front	0.262	0.086	0.099	**0.348**	**0.361**
	Back	0.452	0.547	0.697	**0.999**	**1.149**

WWAN Band	Exposure Position	1	2	4	6	7	1+2+4 Summed 1g SAR (W/kg)	1+4+6 Summed 1g SAR (W/kg)	1+4+7 Summed 1g SAR (W/kg)
		WWAN	2.4GHz WLAN	5GHz WLAN	Bluetooth Chain 0	Bluetooth Chain 1			
		1g SAR (W/kg)	1g SAR (W/kg)	1g SAR (W/kg)	1g SAR (W/kg)	1g SAR (W/kg)			
GSM850_UAT	Front	0.311	0.054	0.063	0.008	0.011	**0.428**	**0.382**	**0.385**
	Back	0.420	0.352	0.455	0.067	0.076	**1.227**	**0.942**	**0.951**
GSM1900_UAT	Front	0.290	0.054	0.063	0.008	0.011	**0.407**	**0.361**	**0.364**
	Back	0.320	0.352	0.455	0.067	0.076	**1.127**	**0.842**	**0.851**
WCDMA V_UAT	Front	0.170	0.054	0.063	0.008	0.011	**0.287**	**0.241**	**0.244**
	Back	0.400	0.352	0.455	0.067	0.076	**1.207**	**0.922**	**0.931**
WCDMA IV_UAT	Front	0.384	0.054	0.063	0.008	0.011	**0.501**	**0.455**	**0.458**
	Back	0.454	0.352	0.455	0.067	0.076	**1.261**	**0.976**	**0.985**
WCDMA II_UAT	Front	0.369	0.054	0.063	0.008	0.011	**0.486**	**0.440**	**0.443**
	Back	0.417	0.352	0.455	0.067	0.076	**1.224**	**0.939**	**0.948**
CDMA2000 BC0_UAT	Front	0.196	0.054	0.063	0.008	0.011	**0.313**	**0.267**	**0.270**
	Back	0.258	0.352	0.455	0.067	0.076	**1.065**	**0.780**	**0.789**
CDMA2000 BC10_UAT	Front	0.155	0.054	0.063	0.008	0.011	**0.272**	**0.226**	**0.229**
	Back	0.198	0.352	0.455	0.067	0.076	**1.005**	**0.720**	**0.729**
CDMA2000 BC1_UAT	Front	0.096	0.054	0.063	0.008	0.011	**0.213**	**0.167**	**0.170**
	Back	0.109	0.352	0.455	0.067	0.076	**0.916**	**0.631**	**0.640**
LTE Band 71_UAT	Front	0.240	0.054	0.063	0.008	0.011	**0.357**	**0.311**	**0.314**
	Back	0.286	0.352	0.455	0.067	0.076	**1.093**	**0.808**	**0.817**
LTE Band 12_UAT	Front	0.345	0.054	0.063	0.008	0.011	**0.462**	**0.416**	**0.419**
	Back	0.384	0.352	0.455	0.067	0.076	**1.191**	**0.906**	**0.915**
LTE Band 13_UAT	Front	0.353	0.054	0.063	0.008	0.011	**0.470**	**0.424**	**0.427**
	Back	0.408	0.352	0.455	0.067	0.076	**1.215**	**0.930**	**0.939**
LTE Band 5_UAT	Front	0.309	0.054	0.063	0.008	0.011	**0.426**	**0.380**	**0.383**
	Back	0.379	0.352	0.455	0.067	0.076	**1.186**	**0.901**	**0.910**
LTE Band 26_UAT	Front	0.340	0.054	0.063	0.008	0.011	**0.457**	**0.411**	**0.414**
	Back	0.424	0.352	0.455	0.067	0.076	**1.231**	**0.946**	**0.955**
LTE Band 66_UAT	Front	0.219	0.054	0.063	0.008	0.011	**0.336**	**0.290**	**0.293**
	Back	0.313	0.352	0.455	0.067	0.076	**1.120**	**0.835**	**0.844**
LTE Band 25_UAT	Front	0.353	0.054	0.063	0.008	0.011	**0.470**	**0.424**	**0.427**
	Back	0.462	0.352	0.455	0.067	0.076	**1.269**	**0.984**	**0.993**
LTE Band 30_UAT	Front	0.408	0.054	0.063	0.008	0.011	**0.525**	**0.479**	**0.482**
	Back	0.457	0.352	0.455	0.067	0.076	**1.264**	**0.979**	**0.988**
LTE Band 7_UAT	Front	0.404	0.054	0.063	0.008	0.011	**0.521**	**0.475**	**0.478**
	Back	0.480	0.352	0.455	0.067	0.076	**1.287**	**1.002**	**1.011**
LTE Band 41_UAT	Front	0.220	0.054	0.063	0.008	0.011	**0.337**	**0.291**	**0.294**
	Back	0.420	0.352	0.455	0.067	0.076	**1.227**	**0.942**	**0.951**
LTE Band 41(HPUE)_UAT	Front	0.286	0.054	0.063	0.008	0.011	**0.403**	**0.357**	**0.360**
	Back	0.385	0.352	0.455	0.067	0.076	**1.192**	**0.907**	**0.916**
LTE Band 48_UAT	Front	0.262	0.054	0.063	0.008	0.011	**0.379**	**0.333**	**0.336**
	Back	0.452	0.352	0.455	0.067	0.076	**1.259**	**0.974**	**0.983**

WWAN Band	Exposure Position	1	2	4	1+2 Summed 1g SAR (W/kg)	1+4 Summed 1g SAR (W/kg)
		WWAN	2.4GHz WLAN	5GHz WLAN		
		1g SAR (W/kg)	1g SAR (W/kg)	1g SAR (W/kg)		
GSM850_LAT	Front	0.212	0.086	0.099	**0.298**	**0.311**
	Back	0.368	0.547	0.697	**0.915**	**1.065**
GSM1900_LAT	Front	0.276	0.086	0.099	**0.362**	**0.375**
	Back	0.351	0.547	0.697	**0.898**	**1.048**
WCDMA V_LAT	Front	0.101	0.086	0.099	**0.187**	**0.200**
	Back	0.354	0.547	0.697	**0.901**	**1.051**
WCDMA IV_LAT	Front	0.574	0.086	0.099	**0.660**	**0.673**
	Back	0.625	0.547	0.697	**1.172**	**1.322**
WCDMA II_LAT	Front	0.619	0.086	0.099	**0.705**	**0.718**
	Back	0.642	0.547	0.697	**1.189**	**1.339**
CDMA2000 BC0_LAT	Front	0.216	0.086	0.099	**0.302**	**0.315**
	Back	0.327	0.547	0.697	**0.874**	**1.024**
CDMA2000 BC10_LAT	Front	0.242	0.086	0.099	**0.328**	**0.341**
	Back	0.325	0.547	0.697	**0.872**	**1.022**
CDMA2000 BC1_LAT	Front	0.685	0.086	0.099	**0.771**	**0.784**
	Back	0.784	0.547	0.697	**1.331**	**1.481**
LTE Band 71_LAT	Front	0.205	0.086	0.099	**0.291**	**0.304**
	Back	0.269	0.547	0.697	**0.816**	**0.966**
LTE Band 12_LAT	Front	0.286	0.086	0.099	**0.372**	**0.385**
	Back	0.394	0.547	0.697	**0.941**	**1.091**
LTE Band 13_LAT	Front	0.285	0.086	0.099	**0.371**	**0.384**
	Back	0.387	0.547	0.697	**0.934**	**1.084**
LTE Band 5_LAT	Front	0.235	0.086	0.099	**0.321**	**0.334**
	Back	0.331	0.547	0.697	**0.878**	**1.028**
LTE Band 26_LAT	Front	0.249	0.086	0.099	**0.335**	**0.348**
	Back	0.403	0.547	0.697	**0.950**	**1.100**
LTE Band 66_LAT	Front	0.583	0.086	0.099	**0.669**	**0.682**
	Back	0.651	0.547	0.697	**1.198**	**1.348**
LTE Band 25_LAT	Front	0.656	0.086	0.099	**0.742**	**0.755**
	Back	0.669	0.547	0.697	**1.216**	**1.366**
LTE Band 30_LAT	Front	0.674	0.086	0.099	**0.760**	**0.773**
	Back	0.747	0.547	0.697	**1.294**	**1.444**
LTE Band 7_LAT	Front	0.614	0.086	0.099	**0.700**	**0.713**
	Back	0.784	0.547	0.697	**1.331**	**1.481**
LTE Band 41_LAT	Front	0.134	0.086	0.099	**0.220**	**0.233**
	Back	0.505	0.547	0.697	**1.052**	**1.202**

WWAN Band	Exposure Position	1	2	4	6	7	1+2+4 Summed 1g SAR (W/kg)	1+4+6 Summed 1g SAR (W/kg)	1+4+7 Summed 1g SAR (W/kg)
		WWAN	2.4GHz WLAN	5GHz WLAN	Bluetooth Chain 0	Bluetooth Chain 1			
		1g SAR (W/kg)	1g SAR (W/kg)	1g SAR (W/kg)	1g SAR (W/kg)	1g SAR (W/kg)			
GSM850_LAT	Front	0.212	0.054	0.063	0.008	0.011	**0.329**	**0.283**	**0.286**
	Back	0.368	0.352	0.455	0.067	0.076	**1.175**	**0.890**	**0.899**
GSM1900_LAT	Front	0.276	0.054	0.063	0.008	0.011	**0.393**	**0.347**	**0.350**
	Back	0.351	0.352	0.455	0.067	0.076	**1.158**	**0.873**	**0.882**
WCDMA V_LAT	Front	0.101	0.054	0.063	0.008	0.011	**0.218**	**0.172**	**0.175**
	Back	0.354	0.352	0.455	0.067	0.076	**1.161**	**0.876**	**0.885**
WCDMA IV_LAT	Front	0.574	0.054	0.063	0.008	0.011	**0.691**	**0.645**	**0.648**
	Back	0.625	0.352	0.455	0.067	0.076	**1.432**	**1.147**	**1.156**
WCDMA II_LAT	Front	0.619	0.054	0.063	0.008	0.011	**0.736**	**0.690**	**0.693**
	Back	0.642	0.352	0.455	0.067	0.076	**1.449**	**1.164**	**1.173**
CDMA2000 BC0_LAT	Front	0.216	0.054	0.063	0.008	0.011	**0.333**	**0.287**	**0.290**
	Back	0.327	0.352	0.455	0.067	0.076	**1.134**	**0.849**	**0.858**
CDMA2000 BC10_LAT	Front	0.242	0.054	0.063	0.008	0.011	**0.359**	**0.313**	**0.316**
	Back	0.325	0.352	0.455	0.067	0.076	**1.132**	**0.847**	**0.856**
CDMA2000 BC1_LAT	Front	0.685	0.054	0.063	0.008	0.011	**0.802**	**0.756**	**0.759**
	Back	0.784	0.352	0.455	0.067	0.076	**1.591**	**1.306**	**1.315**
LTE Band 71_LAT	Front	0.205	0.054	0.063	0.008	0.011	**0.322**	**0.276**	**0.279**
	Back	0.269	0.352	0.455	0.067	0.076	**1.076**	**0.791**	**0.800**
LTE Band 12_LAT	Front	0.286	0.054	0.063	0.008	0.011	**0.403**	**0.357**	**0.360**
	Back	0.394	0.352	0.455	0.067	0.076	**1.201**	**0.916**	**0.925**
LTE Band 13_LAT	Front	0.285	0.054	0.063	0.008	0.011	**0.402**	**0.356**	**0.359**
	Back	0.387	0.352	0.455	0.067	0.076	**1.194**	**0.909**	**0.918**
LTE Band 5_LAT	Front	0.235	0.054	0.063	0.008	0.011	**0.352**	**0.306**	**0.309**
	Back	0.331	0.352	0.455	0.067	0.076	**1.138**	**0.853**	**0.862**
LTE Band 26_LAT	Front	0.249	0.054	0.063	0.008	0.011	**0.366**	**0.320**	**0.323**
	Back	0.403	0.352	0.455	0.067	0.076	**1.210**	**0.925**	**0.934**
LTE Band 66_LAT	Front	0.583	0.054	0.063	0.008	0.011	**0.700**	**0.654**	**0.657**
	Back	0.651	0.352	0.455	0.067	0.076	**1.458**	**1.173**	**1.182**
LTE Band 25_LAT	Front	0.656	0.054	0.063	0.008	0.011	**0.773**	**0.727**	**0.730**
	Back	0.669	0.352	0.455	0.067	0.076	**1.476**	**1.191**	**1.200**
LTE Band 30_LAT	Front	0.674	0.054	0.063	0.008	0.011	**0.791**	**0.745**	**0.748**
	Back	0.747	0.352	0.455	0.067	0.076	**1.554**	**1.269**	**1.278**
LTE Band 7_LAT	Front	0.614	0.054	0.063	0.008	0.011	**0.731**	**0.685**	**0.688**
	Back	0.784	0.352	0.455	0.067	0.076	**1.591**	**1.306**	**1.315**
LTE Band 41_LAT	Front	0.134	0.054	0.063	0.008	0.011	**0.251**	**0.205**	**0.208**
	Back	0.505	0.352	0.455	0.067	0.076	**1.312**	**1.027**	**1.036**

18.4 Product Specific Exposure Conditions

WWAN Band	Exposure Position	1 WWAN 10g SAR (W/kg)	2 2.4GHz WLAN 10g SAR (W/kg)	4 5GHz WLAN 10g SAR (W/kg)	1+2 Summed 10g SAR (W/kg)	1+4 Summed 10g SAR (W/kg)
CDMA2000 BC1_UAT	Front		0.594	1.067	**0.594**	**1.067**
	Back		1.328	1.663	**1.328**	**1.663**
	Left side				**0.000**	**0.000**
	Right side		0.897	0.891	**0.897**	**0.891**
	Top side		0.157	0.433	**0.157**	**0.433**
	Bottom side				**0.000**	**0.000**
LTE Band 26_UAT	Front		0.594	1.067	**0.594**	**1.067**
	Back		1.328	1.663	**1.328**	**1.663**
	Left side	1.432			**1.432**	**1.432**
	Right side		0.897	0.891	**0.897**	**0.891**
	Top side		0.157	0.433	**0.157**	**0.433**
	Bottom side				**0.000**	**0.000**
LTE Band 25_UAT	Front	2.078	0.594	1.067	**2.672**	**3.145**
	Back	1.046	1.328	1.663	**2.374**	**2.709**
	Left side				**0.000**	**0.000**
	Right side		0.897	0.891	**0.897**	**0.891**
	Top side	2.59	0.157	0.433	**2.747**	**3.023**
	Bottom side				**0.000**	**0.000**
LTE Band 30_UAT	Front		0.594	1.067	**0.594**	**1.067**
	Back	1.047	1.328	1.663	**2.375**	**2.710**
	Left side				**0.000**	**0.000**
	Right side		0.897	0.891	**0.897**	**0.891**
	Top side	1.841	0.157	0.433	**1.998**	**2.274**
	Bottom side				**0.000**	**0.000**
LTE Band 7_UAT	Front	1.982	0.594	1.067	**2.576**	**3.049**
	Back	0.817	1.328	1.663	**2.145**	**2.480**
	Left side				**0.000**	**0.000**
	Right side		0.897	0.891	**0.897**	**0.891**
	Top side	1.721	0.157	0.433	**1.878**	**2.154**
	Bottom side				**0.000**	**0.000**
LTE Band 41_UAT	Front		0.594	1.067	**0.594**	**1.067**
	Back		1.328	1.663	**1.328**	**1.663**
	Left side				**0.000**	**0.000**
	Right side		0.897	0.891	**0.897**	**0.891**
	Top side	1.801	0.157	0.433	**1.958**	**2.234**
	Bottom side				**0.000**	**0.000**
LTE Band 41(HPUE)_UAT	Front		0.594	1.067	**0.594**	**1.067**
	Back		1.328	1.663	**1.328**	**1.663**
	Left side				**0.000**	**0.000**
	Right side		0.897	0.891	**0.897**	**0.891**
	Top side	1.994	0.157	0.433	**2.151**	**2.427**
	Bottom side				**0.000**	**0.000**
LTE Band 48_UAT	Front		0.594	1.067	**0.594**	**1.067**
	Back	0.716	1.328	1.663	**2.044**	**2.379**
	Left side				**0.000**	**0.000**
	Right side		0.897	0.891	**0.897**	**0.891**
	Top side	1.986	0.157	0.433	**2.143**	**2.419**
	Bottom side				**0.000**	**0.000**

WWAN Band	Exposure Position	1 WWAN 10g SAR (W/kg)	2 2.4GHz WLAN 10g SAR (W/kg)	4 5GHz WLAN 10g SAR (W/kg)	1+2+4 Summed 10g SAR (W/kg)
CDMA2000 BC1_UAT	Front		0.300	0.158	**0.458**
	Back		0.669	0.946	**1.615**
	Left side				**0.000**
	Right side		0.452	0.553	**1.005**
	Top side		0.079	0.239	**0.318**
	Bottom side				**0.000**
LTE Band 26_UAT	Front		0.300	0.158	**0.458**
	Back		0.669	0.946	**1.615**
	Left side	1.432			**1.432**
	Right side		0.452	0.553	**1.005**
	Top side		0.079	0.239	**0.318**
	Bottom side				**0.000**
LTE Band 25_UAT	Front	2.078	0.300	0.158	**2.536**
	Back	1.046	0.669	0.946	**2.661**
	Left side				**0.000**
	Right side		0.452	0.553	**1.005**
	Top side	2.590	0.079	0.239	**2.908**
	Bottom side				**0.000**
LTE Band 30_UAT	Front		0.300	0.158	**0.458**
	Back	1.047	0.669	0.946	**2.662**
	Left side				**0.000**
	Right side		0.452	0.553	**1.005**
	Top side	1.841	0.079	0.239	**2.159**
	Bottom side				**0.000**
LTE Band 7_UAT	Front	1.982	0.300	0.158	**2.440**
	Back	0.817	0.669	0.946	**2.432**
	Left side				**0.000**
	Right side		0.452	0.553	**1.005**
	Top side	1.721	0.079	0.239	**2.039**
	Bottom side				**0.000**
LTE Band 41_UAT	Front		0.300	0.158	**0.458**
	Back		0.669	0.946	**1.615**
	Left side				**0.000**
	Right side		0.452	0.553	**1.005**
	Top side	1.801	0.079	0.239	**2.119**
	Bottom side				**0.000**
LTE Band 41(HPUE)_UAT	Front		0.300	0.158	**0.458**
	Back		0.669	0.946	**1.615**
	Left side				**0.000**
	Right side		0.452	0.553	**1.005**
	Top side	1.994	0.079	0.239	**2.312**
	Bottom side				**0.000**
LTE Band 48_UAT	Front		0.300	0.158	**0.458**
	Back	0.716	0.669	0.946	**2.331**
	Left side				**0.000**
	Right side		0.452	0.553	**1.005**
	Top side	1.986	0.079	0.239	**2.304**
	Bottom side				**0.000**

WWAN Band	Exposure Position	1 WWAN 10g SAR (W/kg)	2 2.4GHz WLAN 10g SAR (W/kg)	4 5GHz WLAN 10g SAR (W/kg)	1+2 Summed 10g SAR (W/kg)	1+4 Summed 10g SAR (W/kg)
WCDMA IV_LAT	Front		0.594	1.067	**0.594**	**1.067**
	Back	1.895	1.328	1.663	**3.223**	**3.558**
	Left side				**0.000**	**0.000**
	Right side		0.897	0.891	**0.897**	**0.891**
	Top side		0.157	0.433	**0.157**	**0.433**
	Bottom side	1.305			**1.305**	**1.305**
WCDMA II_LAT	Front	1.303	0.594	1.067	**1.897**	**2.370**
	Back	1.649	1.328	1.663	**2.977**	**3.312**
	Left side				**0.000**	**0.000**
	Right side		0.897	0.891	**0.897**	**0.891**
	Top side		0.157	0.433	**0.157**	**0.433**
	Bottom side	1.269			**1.269**	**1.269**
CDMA2000 BC1_LAT	Front		0.594	1.067	**0.594**	**1.067**
	Back	2.112	1.328	1.663	**3.440**	**3.775**
	Left side				**0.000**	**0.000**
	Right side		0.897	0.891	**0.897**	**0.891**
	Top side		0.157	0.433	**0.157**	**0.433**
	Bottom side	1.27			**1.270**	**1.270**
LTE Band 66_LAT	Front		0.594	1.067	**0.594**	**1.067**
	Back	2.116	1.328	1.663	**3.444**	**3.779**
	Left side				**0.000**	**0.000**
	Right side		0.897	0.891	**0.897**	**0.891**
	Top side		0.157	0.433	**0.157**	**0.433**
	Bottom side	0.948			**0.948**	**0.948**
LTE Band 25_LAT	Front	1.396	0.594	1.067	**1.990**	**2.463**
	Back	2.021	1.328	1.663	**3.349**	**3.684**
	Left side				**0.000**	**0.000**
	Right side		0.897	0.891	**0.897**	**0.891**
	Top side		0.157	0.433	**0.157**	**0.433**
	Bottom side	1.305			**1.305**	**1.305**
LTE Band 7_LAT	Front	1.554	0.594	1.067	**2.148**	**2.621**
	Back	2.287	1.328	1.663	**3.615**	**3.950**
	Left side				**0.000**	**0.000**
	Right side		0.897	0.891	**0.897**	**0.891**
	Top side		0.157	0.433	**0.157**	**0.433**
	Bottom side	0.689			**0.689**	**0.689**

WWAN Band	Exposure Position	1 WWAN 10g SAR (W/kg)	2 2.4GHz WLAN 10g SAR (W/kg)	4 5GHz WLAN 10g SAR (W/kg)	1+2+4 Summed 10g SAR (W/kg)
WCDMA IV_LAT	Front		0.300	0.158	**0.458**
	Back	1.895	0.669	0.946	**3.510**
	Left side				**0.000**
	Right side		0.452	0.553	**1.005**
	Top side		0.079	0.239	**0.318**
	Bottom side	1.305			**1.305**
WCDMA II_LAT	Front	1.303	0.300	0.158	**1.761**
	Back	1.649	0.669	0.946	**3.264**
	Left side				**0.000**
	Right side		0.452	0.553	**1.005**
	Top side		0.079	0.239	**0.318**
	Bottom side	1.269			**1.269**
CDMA2000 BC1_LAT	Front		0.300	0.158	**0.458**
	Back	2.112	0.669	0.946	**3.727**
	Left side				**0.000**
	Right side		0.452	0.553	**1.005**
	Top side		0.079	0.239	**0.318**
	Bottom side	1.270			**1.270**
LTE Band 66_LAT	Front		0.300	0.158	**0.458**
	Back	2.116	0.669	0.946	**3.731**
	Left side				**0.000**
	Right side		0.452	0.553	**1.005**
	Top side		0.079	0.239	**0.318**
	Bottom side	0.948			**0.948**
LTE Band 25_LAT	Front	1.396	0.300	0.158	**1.854**
	Back	2.021	0.669	0.946	**3.636**
	Left side				**0.000**
	Right side		0.452	0.553	**1.005**
	Top side		0.079	0.239	**0.318**
	Bottom side	1.305			**1.305**
LTE Band 7_LAT	Front	1.554	0.300	0.158	**2.012**
	Back	2.287	0.669	0.946	**3.902**
	Left side				**0.000**
	Right side		0.452	0.553	**1.005**
	Top side		0.079	0.239	**0.318**
	Bottom side	0.689			**0.689**

18.5 Inter-Band uplink CA consideration

<Inter-band uplink CA combination>

2CC Uplink Carrier Aggregation				
Number	Combination	4X4 MIMO	Restriction	Covered by Measurement Superset
4	2A-12A	2A		
5	2A-13A	2A		
6	4A-12A	4A		
7	4A-13A	4A		
8	12A-66A	66A		
9	13A-66A	66A		

General Note:

1. According to October 2018 TCB workshop, uplink CA SAR test guidance as follows:
   a. Provide the single uplink SAR values you have obtained for the relevant SAR configuration and frequency bands that employ inter-band uplink carrier aggregation.
   b. If the single uplink 1g SAR values for each band are both less than 0.8W/kg and the algebraic summation of the 1g SAR values are less than 1.45W/kg no additional measurements need to be performed.
   c. If one on the single uplink 1g SAR values is greater than 0.8W/kg, instead of algebraically summing the 1g SAR values, sum up the SAR distributions, similar to the enlarged zoom scan (volume scan) procedures found in FCC KDB publication 865664 D01 SAR measurement 100MHz to 6GHz V01r04
   d. If the algebraic sum of the 1g SAR values is > 1.45W/kg additional measurements may have to be made. Submit a KDB inquiry for additional guidance.
2. Test positions and test channels used for the testing below are based on the standalone SAR result. When the UL CA active reduced by 3dB for each frequency bands, therefore power and SAR was estimated based on standalone results to performed sim-Tx analysis with WiFi and Bluetooth.
3. The single uplink 1g SAR values for each band are both less than 0.8W/kg and the algebraic summation of the 1g SAR value are less than 1.45W/kg, additional measurements are not required

<Inter-band uplink CA Sim-Tx analysis>

<UAT antenna>

Head		Standalone				UL CA active				WLAN				Inter-band UL CA summation				
		CC1	CC2	CC1	CC2	CC1	CC2	1	8	2	4	6	7					
WWAN Band	Exposure Position	Tune-up Limit (dBm)	Tune-up Limit (dBm)	WWAN 1g SAR (W/kg)	LTE B12 1g SAR (W/kg)	Tune-up Limit (dBm)	Tune-up Limit (dBm)	WWAN 1g SAR (W/kg)	LTE B12 1g SAR (W/kg)	2.4GHz WLAN Ant 1+2 1g SAR (W/kg)	5GHz WLAN Ant 1+2 1g SAR (W/kg)	Bluetooth Chain 0 1g SAR (W/kg)	Bluetooth Chain 1 1g SAR (W/kg)	**1+2+8 Summed 1g SAR (W/kg)**	**1+4+8 Summed 1g SAR (W/kg)**	**1+2+4+8 Summed 1g SAR (W/kg)**	**1+4+6+8 Summed 1g SAR (W/kg)**	**1+4+7+8 Summed 1g SAR (W/kg)**
LTE Band 2_UAT	Right Cheek	13.50	20.30	0.687	0.519	10.50	17.30	0.344	0.260	0.087	0.140	0.033	0.063	**0.690**	**0.743**	**0.830**	**0.776**	**0.806**
	Right Tilted	13.50	20.30	0.896	0.106	10.50	17.30	0.448	0.053	0.083	0.186	0.021	0.059	**0.584**	**0.687**	**0.770**	**0.708**	**0.746**
	Left Cheek	13.50	20.30	0.533	0.605	10.50	17.30	0.267	0.303	0.309	0.259	0.276	0.222	**0.878**	**0.828**	**1.137**	**1.104**	**1.050**
	Left Tilted	13.50	20.30	0.639	0.110	10.50	17.30	0.320	0.055	0.266	0.323	0.071	0.192	**0.641**	**0.698**	**0.964**	**0.769**	**0.890**
LTE Band 66_UAT	Right Cheek	13.00	20.30	0.509	0.519	10.00	17.30	0.255	0.260	0.087	0.140	0.033	0.063	**0.601**	**0.654**	**0.741**	**0.687**	**0.717**
	Right Tilted	13.00	20.30	0.736	0.106	10.00	17.30	0.368	0.053	0.083	0.186	0.021	0.059	**0.504**	**0.607**	**0.690**	**0.628**	**0.666**
	Left Cheek	13.00	20.30	0.345	0.605	10.00	17.30	0.173	0.303	0.309	0.259	0.276	0.222	**0.784**	**0.734**	**1.043**	**1.010**	**0.956**
	Left Tilted	13.00	20.30	0.465	0.110	10.00	17.30	0.233	0.055	0.266	0.323	0.071	0.192	**0.554**	**0.611**	**0.877**	**0.682**	**0.803**

Head		Standalone				UL CA active				WLAN				Inter-band UL CA summation				
WWAN Band	Exposure Position	CC1	CC2	CC1	CC2	CC1	CC2	1	8	2	4	6	7	1+2+8 Summed 1g SAR (W/kg)	1+4+8 Summed 1g SAR (W/kg)	1+2+4+8 Summed 1g SAR (W/kg)	1+4+6+8 Summed 1g SAR (W/kg)	1+4+7+8 Summed 1g SAR (W/kg)
		Tune-up Limit (dBm)	Tune-up Limit (dBm)	WWAN	LTE B13	Tune-up Limit-3 (dBm)	Tune-up Limit-3 (dBm)	WWAN	LTE B13	2.4GHz WLAN Ant 1+2	5GHz WLAN Ant 1+2	Bluetooth Chain 0	Bluetooth Chain 1					
		CC1	CC2	1g SAR (W/kg)	1g SAR (W/kg)	CC1	CC2	1g SAR (W/kg)	1g SAR (W/kg)	1g SAR (W/kg)	1g SAR (W/kg)	1g SAR (W/kg)	1g SAR (W/kg)					
LTE Band 2_UAT	Right Cheek	13.50	21.30	0.687	0.550	10.50	18.30	0.344	0.275	0.087	0.140	0.033	0.063	**0.706**	**0.759**	**0.846**	**0.792**	**0.822**
	Right Tilted	13.50	21.30	0.896	0.113	10.50	18.30	0.448	0.057	0.083	0.186	0.021	0.059	**0.588**	**0.691**	**0.774**	**0.712**	**0.750**
	Left Cheek	13.50	21.30	0.533	0.714	10.50	18.30	0.267	0.357	0.309	0.259	0.276	0.222	**0.933**	**0.883**	**1.192**	**1.159**	**1.105**
	Left Tilted	13.50	21.30	0.639	0.111	10.50	18.30	0.320	0.056	0.266	0.323	0.071	0.192	**0.641**	**0.698**	**0.964**	**0.769**	**0.890**
LTE Band 66_UAT	Right Cheek	13.00	21.30	0.509	0.550	10.00	18.30	0.255	0.275	0.087	0.140	0.033	0.063	**0.617**	**0.670**	**0.757**	**0.703**	**0.733**
	Right Tilted	13.00	21.30	0.736	0.113	10.00	18.30	0.368	0.057	0.083	0.186	0.021	0.059	**0.508**	**0.611**	**0.694**	**0.632**	**0.670**
	Left Cheek	13.00	21.30	0.345	0.714	10.00	18.30	0.173	0.357	0.309	0.259	0.276	0.222	**0.839**	**0.789**	**1.098**	**1.065**	**1.011**
	Left Tilted	13.00	21.30	0.465	0.111	10.00	18.30	0.233	0.056	0.266	0.323	0.071	0.192	**0.554**	**0.611**	**0.877**	**0.682**	**0.803**

Hotspot		Standalone				UL CA active				WLAN				Inter-band UL CA summation				
WWAN Band	Exposure Position	CC1	CC2	CC1	CC2	CC1	CC2	1	8	2	4	6	7	1+2+8 Summed 1g SAR (W/kg)	1+4+8 Summed 1g SAR (W/kg)	1+2+4+8 Summed 1g SAR (W/kg)	1+4+6+8 Summed 1g SAR (W/kg)	1+4+7+8 Summed 1g SAR (W/kg)
		Tune-up Limit (dBm)	Tune-up Limit (dBm)	WWAN	LTE B12	Tune-up Limit (dBm)	Tune-up Limit (dBm)	WWAN	LTE B12	2.4GHz WLAN Ant 1+2	5GHz WLAN Ant 1+2	Bluetooth Chain 0	Bluetooth Chain 1					
				1g SAR (W/kg)	1g SAR (W/kg)			1g SAR (W/kg)	1g SAR (W/kg)	1g SAR (W/kg)	1g SAR (W/kg)	1g SAR (W/kg)	1g SAR (W/kg)					
LTE Band 2_UAT	Front	16.50	23.80	0.388	0.621	13.50	20.80	0.194	0.311	0.061	0.002	0.048	0.041	**0.566**	**0.507**	**0.568**	**0.555**	**0.548**
	Back	16.50	23.80	0.466	0.641	13.50	20.80	0.233	0.321	0.314	0.343	0.197	0.190	**0.868**	**0.897**	**1.211**	**1.094**	**1.087**
	Left side	16.50	23.80	0.096	0.890	13.50	20.80	0.048	0.445					**0.493**	**0.493**	**0.493**	**0.493**	**0.493**
	Right side	16.50	23.80	0.001	0.048	13.50	20.80	0.001	0.024	0.120	0.420	0.127	0.133	**0.145**	**0.445**	**0.565**	**0.572**	**0.578**
	Top side	16.50	23.80	0.653	0.012	13.50	20.80	0.327	0.006	0.081	0.068	0.309	0.054	**0.414**	**0.401**	**0.482**	**0.710**	**0.455**
	Bottom side													**0.000**	**0.000**	**0.000**	**0.000**	**0.000**
LTE Band 66_UAT	Front	22.00	23.80	0.515	0.621	19.00	20.80	0.258	0.311	0.061	0.002	0.048	0.041	**0.629**	**0.570**	**0.631**	**0.618**	**0.611**
	Back	22.00	23.80	0.555	0.641	19.00	20.80	0.278	0.321	0.314	0.343	0.197	0.190	**0.912**	**0.941**	**1.255**	**1.138**	**1.131**
	Left side	22.00	23.80	0.163	0.890	19.00	20.80	0.082	0.445					**0.527**	**0.527**	**0.527**	**0.527**	**0.527**
	Right side	22.00	23.80	0.001	0.048	19.00	20.80	0.001	0.024	0.120	0.420	0.127	0.133	**0.145**	**0.445**	**0.565**	**0.572**	**0.578**
	Top side	22.00	23.80	0.918	0.012	19.00	20.80	0.459	0.006	0.081	0.068	0.309	0.054	**0.546**	**0.533**	**0.614**	**0.842**	**0.587**
	Bottom side													**0.000**	**0.000**	**0.000**	**0.000**	**0.000**

Hotspot		Standalone				UL CA active				WLAN				Inter-band UL CA summation				
WWAN Band	Exposure Position	CC1	CC2	CC1	CC2	CC1	CC2	1	8	2	4	6	7	1+2+8 Summed 1g SAR (W/kg)	1+4+8 Summed 1g SAR (W/kg)	1+2+4+8 Summed 1g SAR (W/kg)	1+4+6+8 Summed 1g SAR (W/kg)	1+4+7+8 Summed 1g SAR (W/kg)
		Tune-up Limit (dBm)	Tune-up Limit (dBm)	WWAN	LTE B13	Tune-up Limit-3 (dBm)	Tune-up Limit-3 (dBm)	WWAN	LTE B13	2.4GHz WLAN Ant 1+2	5GHz WLAN Ant 1+2	Bluetooth Chain 0	Bluetooth Chain 1					
		CC1	CC2	1g SAR (W/kg)	1g SAR (W/kg)	CC1	CC2	1g SAR (W/kg)	1g SAR (W/kg)	1g SAR (W/kg)	1g SAR (W/kg)	1g SAR (W/kg)	1g SAR (W/kg)					
LTE Band 2_UAT	Front	16.50	22.30	0.388	0.472	13.50	19.30	0.194	0.236	0.061	0.002	0.048	0.041	**0.491**	**0.432**	**0.493**	**0.480**	**0.473**
	Back	16.50	22.30	0.466	0.519	13.50	19.30	0.233	0.260	0.314	0.343	0.197	0.190	**0.807**	**0.836**	**1.150**	**1.033**	**1.026**
	Left side	16.50	22.30	0.096	0.764	13.50	19.30	0.048	0.382					**0.430**	**0.430**	**0.430**	**0.430**	**0.430**
	Right side	16.50	22.30	0.001	0.031	13.50	19.30	0.001	0.016	0.120	0.420	0.127	0.133	**0.136**	**0.436**	**0.556**	**0.563**	**0.569**
	Top side	16.50	22.30	0.653	0.069	13.50	19.30	0.327	0.035	0.081	0.068	0.309	0.054	**0.442**	**0.429**	**0.510**	**0.738**	**0.483**
	Bottom side													**0.000**	**0.000**	**0.000**	**0.000**	**0.000**
LTE Band 66_UAT	Front	22.00	22.30	0.515	0.472	19.00	19.30	0.258	0.236	0.061	0.002	0.048	0.041	**0.555**	**0.496**	**0.557**	**0.544**	**0.537**
	Back	22.00	22.30	0.555	0.519	19.00	19.30	0.278	0.260	0.314	0.343	0.197	0.190	**0.851**	**0.880**	**1.194**	**1.077**	**1.070**
	Left side	22.00	22.30	0.163	0.764	19.00	19.30	0.082	0.382					**0.464**	**0.464**	**0.464**	**0.464**	**0.464**
	Right side	22.00	22.30	0.001	0.031	19.00	19.30	0.001	0.016	0.120	0.420	0.127	0.133	**0.136**	**0.436**	**0.556**	**0.563**	**0.569**
	Top side	22.00	22.30	0.918	0.069	19.00	19.30	0.459	0.035	0.081	0.068	0.309	0.054	**0.575**	**0.562**	**0.643**	**0.871**	**0.616**
	Bottom side													**0.000**	**0.000**	**0.000**	**0.000**	**0.000**

Body-worn		Standalone				UL CA active				WLAN				Inter-band UL CA summation				
WWAN Band	Exposure Position	CC1	CC2	CC1	CC2	CC1	CC2	1	8	2	4	6	7	1+2+8 Summed 1g SAR (W/kg)	1+4+8 Summed 1g SAR (W/kg)	1+2+4+8 Summed 1g SAR (W/kg)	1+4+6+8 Summed 1g SAR (W/kg)	1+4+7+8 Summed 1g SAR (W/kg)
		Tune-up Limit (dBm)	Tune-up Limit (dBm)	WWAN	LTE B12	Tune-up Limit (dBm)	Tune-up Limit (dBm)	WWAN	LTE B12	2.4GHz WLAN Ant 1+2	5GHz WLAN Ant 1+2	Bluetooth Chain 0	Bluetooth Chain 1					
				1g SAR (W/kg)	1g SAR (W/kg)			1g SAR (W/kg)	1g SAR (W/kg)	1g SAR (W/kg)	1g SAR (W/kg)	1g SAR (W/kg)	1g SAR (W/kg)					
LTE Band 2_UAT	Front	22.00	23.80	0.353	0.345	19.00	20.80	0.177	0.173	0.054	0.063	0.008	0.011	**0.403**	**0.412**	**0.466**	**0.420**	**0.423**
	Back	22.00	23.80	0.462	0.384	19.00	20.80	0.231	0.192	0.352	0.455	0.067	0.076	**0.775**	**0.878**	**1.230**	**0.945**	**0.954**
LTE Band 66_UAT	Front	22.00	23.80	0.219	0.345	19.00	20.80	0.110	0.173	0.054	0.063	0.008	0.011	**0.336**	**0.345**	**0.399**	**0.353**	**0.356**
	Back	22.00	23.80	0.313	0.384	19.00	20.80	0.157	0.192	0.352	0.455	0.067	0.076	**0.701**	**0.804**	**1.156**	**0.871**	**0.880**

Body-worn		Standalone				UL CA active				WLAN				Inter-band UL CA summation				
WWAN Band	Exposure Position	CC1	CC2	CC1	CC2	CC1	CC2	1	8	2	4	6	7	1+2+8 Summed 1g SAR (W/kg)	1+4+8 Summed 1g SAR (W/kg)	1+2+4+8 Summed 1g SAR (W/kg)	1+4+6+8 Summed 1g SAR (W/kg)	1+4+7+8 Summed 1g SAR (W/kg)
		Tune-up Limit (dBm)	Tune-up Limit (dBm)	WWAN	LTE B13	Tune-up Limit-3 (dBm)	Tune-up Limit-3 (dBm)	WWAN	LTE B13	2.4GHz WLAN Ant 1+2	5GHz WLAN Ant 1+2	Bluetooth Chain 0	Bluetooth Chain 1					
		CC1	CC2	1g SAR (W/kg)	1g SAR (W/kg)	CC1	CC2	1g SAR (W/kg)	1g SAR (W/kg)	1g SAR (W/kg)	1g SAR (W/kg)	1g SAR (W/kg)	1g SAR (W/kg)					
LTE Band 2_UAT	Front	22.00	23.80	0.353	0.353	19.00	20.80	0.177	0.177	0.054	0.063	0.008	0.011	**0.407**	**0.416**	**0.470**	**0.424**	**0.427**
	Back	22.00	23.80	0.462	0.408	19.00	20.80	0.231	0.204	0.352	0.455	0.067	0.076	**0.787**	**0.890**	**1.242**	**0.957**	**0.966**
LTE Band 66_UAT	Front	22.00	23.80	0.219	0.353	19.00	20.80	0.110	0.177	0.054	0.063	0.008	0.011	**0.340**	**0.349**	**0.403**	**0.357**	**0.360**
	Back	22.00	23.80	0.313	0.408	19.00	20.80	0.157	0.204	0.352	0.455	0.067	0.076	**0.713**	**0.816**	**1.168**	**0.883**	**0.892**

<LAT antenna>

Head			Standalone				UL CA active				WLAN				Inter-band UL CA summation				
WWAN Band		Exposure Position	CC1	CC2	CC1	CC2	CC1	CC2	1	8	2	4	6	7	1+2+8 Summed 1g SAR (W/kg)	1+4+8 Summed 1g SAR (W/kg)	1+2+4+8 Summed 1g SAR (W/kg)	1+4+6+8 Summed 1g SAR (W/kg)	1+4+7+8 Summed 1g SAR (W/kg)
			Tune-up Limit (dBm)	Tune-up Limit (dBm)	WWAN	LTE B12	Tune-up Limit (dBm)	Tune-up Limit (dBm)	WWAN	LTE B12	2.4GHz WLAN Ant 1+2	5GHz WLAN Ant 1+2	Bluetooth Chain 0	Bluetooth Chain 1					
					1g SAR (W/kg)	1g SAR (W/kg)			1g SAR (W/kg)	1g SAR (W/kg)	1g SAR (W/kg)	1g SAR (W/kg)	1g SAR (W/kg)	1g SAR (W/kg)					
LTE	LTE Band 2_LAT	Right Cheek	23.80	23.80	0.355	0.168	20.80	20.80	0.178	0.084	0.087	0.140	0.033	0.063	**0.349**	**0.402**	**0.489**	**0.435**	**0.465**
		Right Tilted	23.80	23.80	0.184	0.095	20.80	20.80	0.092	0.048	0.083	0.186	0.021	0.059	**0.223**	**0.326**	**0.409**	**0.347**	**0.385**
		Left Cheek	23.80	23.80	0.178	0.206	20.80	20.80	0.089	0.103	0.309	0.259	0.276	0.222	**0.501**	**0.451**	**0.760**	**0.727**	**0.673**
		Left Tilted	23.80	23.80	0.137	0.084	20.80	20.80	0.069	0.042	0.266	0.323	0.071	0.192	**0.377**	**0.434**	**0.700**	**0.505**	**0.626**
	LTE Band 66_LAT	Right Cheek	23.80	23.80	0.272	0.168	20.80	20.80	0.136	0.084	0.087	0.140	0.033	0.063	**0.307**	**0.360**	**0.447**	**0.393**	**0.423**
		Right Tilted	23.80	23.80	0.141	0.095	20.80	20.80	0.071	0.048	0.083	0.186	0.021	0.059	**0.201**	**0.304**	**0.387**	**0.325**	**0.363**
		Left Cheek	23.80	23.80	0.228	0.206	20.80	20.80	0.114	0.103	0.309	0.259	0.276	0.222	**0.526**	**0.476**	**0.785**	**0.752**	**0.698**
		Left Tilted	23.80	23.80	0.099	0.084	20.80	20.80	0.050	0.042	0.266	0.323	0.071	0.192	**0.358**	**0.415**	**0.681**	**0.486**	**0.607**

Head			Standalone				UL CA active				WLAN				Inter-band UL CA summation				
WWAN Band		Exposure Position	CC1	CC2	CC1	CC2	CC1	CC2	1	8	2	4	6	7	1+2+8 Summed 1g SAR (W/kg)	1+4+8 Summed 1g SAR (W/kg)	1+2+4+8 Summed 1g SAR (W/kg)	1+4+6+8 Summed 1g SAR (W/kg)	1+4+7+8 Summed 1g SAR (W/kg)
			Tune-up Limit (dBm)	Tune-up Limit (dBm)	WWAN	LTE B13	Tune-up Limit-3 (dBm)	Tune-up Limit-3 (dBm)	WWAN	LTE B13	2.4GHz WLAN Ant 1+2	5GHz WLAN Ant 1+2	Bluetooth Chain 0	Bluetooth Chain 1					
			CC1	CC2	1g SAR (W/kg)	1g SAR (W/kg)	CC1	CC2	1g SAR (W/kg)	1g SAR (W/kg)	1g SAR (W/kg)	1g SAR (W/kg)	1g SAR (W/kg)	1g SAR (W/kg)					
LTE	LTE Band 2_LAT	Right Cheek	23.80	23.80	0.355	0.116	20.80	20.80	0.178	0.058	0.087	0.140	0.033	0.063	**0.323**	**0.376**	**0.463**	**0.409**	**0.439**
		Right Tilted	23.80	23.80	0.184	0.056	20.80	20.80	0.092	0.028	0.083	0.186	0.021	0.059	**0.203**	**0.306**	**0.389**	**0.327**	**0.365**
		Left Cheek	23.80	23.80	0.178	0.148	20.80	20.80	0.089	0.074	0.309	0.259	0.276	0.222	**0.472**	**0.422**	**0.731**	**0.698**	**0.644**
		Left Tilted	23.80	23.80	0.137	0.050	20.80	20.80	0.069	0.025	0.266	0.323	0.071	0.192	**0.360**	**0.417**	**0.683**	**0.488**	**0.609**
	LTE Band 66_LAT	Right Cheek	23.80	23.80	0.272	0.116	20.80	20.80	0.136	0.058	0.087	0.140	0.033	0.063	**0.281**	**0.334**	**0.421**	**0.367**	**0.397**
		Right Tilted	23.80	23.80	0.141	0.056	20.80	20.80	0.071	0.028	0.083	0.186	0.021	0.059	**0.182**	**0.285**	**0.368**	**0.306**	**0.344**
		Left Cheek	23.80	23.80	0.228	0.148	20.80	20.80	0.114	0.074	0.309	0.259	0.276	0.222	**0.497**	**0.447**	**0.756**	**0.723**	**0.669**
		Left Tilted	23.80	23.80	0.099	0.050	20.80	20.80	0.050	0.025	0.266	0.323	0.071	0.192	**0.341**	**0.398**	**0.664**	**0.469**	**0.590**

Body			Standalone				UL CA active				WLAN				Inter-band UL CA summation				
WWAN Band		Exposure Position	CC1	CC2	CC1	CC2	CC1	CC2	1	8	2	4	6	7	1+2+8 Summed 1g SAR (W/kg)	1+4+8 Summed 1g SAR (W/kg)	1+2+4+8 Summed 1g SAR (W/kg)	1+4+6+8 Summed 1g SAR (W/kg)	1+4+7+8 Summed 1g SAR (W/kg)
			Tune-up Limit (dBm)	Tune-up Limit (dBm)	WWAN	LTE B12	Tune-up Limit (dBm)	Tune-up Limit (dBm)	WWAN	LTE B12	2.4GHz WLAN Ant 1+2	5GHz WLAN Ant 1+2	Bluetooth Chain 0	Bluetooth Chain 1					
					1g SAR (W/kg)	1g SAR (W/kg)			1g SAR (W/kg)	1g SAR (W/kg)	1g SAR (W/kg)	1g SAR (W/kg)	1g SAR (W/kg)	1g SAR (W/kg)					
LTE	LTE Band 2_LAT	Front	18.30	23.80	0.316	0.296	15.30	20.80	0.158	0.148	0.061	0.002	0.048	0.041	**0.367**	**0.308**	**0.369**	**0.356**	**0.349**
		Back	18.30	23.80	0.470	0.563	15.30	20.80	0.235	0.282	0.314	0.343	0.197	0.190	**0.831**	**0.860**	**1.174**	**1.057**	**1.050**
		Left side	18.30	23.80	0.054	0.275	15.30	20.80	0.027	0.138					**0.165**	**0.165**	**0.165**	**0.165**	**0.165**
		Right side	18.30	23.80	0.079	0.232	15.30	20.80	0.040	0.116	0.120	0.420	0.127	0.133	**0.276**	**0.576**	**0.696**	**0.703**	**0.709**
		Top side									0.081	0.068	0.309	0.054	**0.081**	**0.068**	**0.149**	**0.377**	**0.122**
		Bottom side	18.30	23.80	0.517	0.188	15.30	20.80	0.259	0.094					**0.353**	**0.353**	**0.353**	**0.353**	**0.353**
	LTE Band 66_LAT	Front	20.80	23.80	0.463	0.296	17.80	20.80	0.232	0.148	0.061	0.002	0.048	0.041	**0.441**	**0.382**	**0.443**	**0.430**	**0.423**
		Back	20.80	23.80	0.711	0.563	17.80	20.80	0.356	0.282	0.314	0.343	0.197	0.190	**0.951**	**0.980**	**1.294**	**1.177**	**1.170**
		Left side	20.80	23.80	0.171	0.275	17.80	20.80	0.086	0.138					**0.223**	**0.223**	**0.223**	**0.223**	**0.223**
		Right side	20.80	23.80	0.098	0.232	17.80	20.80	0.049	0.116	0.120	0.420	0.127	0.133	**0.285**	**0.585**	**0.705**	**0.712**	**0.718**
		Top side									0.081	0.068	0.309	0.054	**0.081**	**0.068**	**0.149**	**0.377**	**0.122**
		Bottom side	20.80	23.80	0.874	0.188	17.80	20.80	0.437	0.094					**0.531**	**0.531**	**0.531**	**0.531**	**0.531**

Body			Standalone				UL CA active				WLAN				Inter-band UL CA summation				
WWAN Band		Exposure Position	CC1	CC2	CC1	CC2	CC1	CC2	1	8	2	4	6	7	1+2+8 Summed 1g SAR (W/kg)	1+4+8 Summed 1g SAR (W/kg)	1+2+4+8 Summed 1g SAR (W/kg)	1+4+6+8 Summed 1g SAR (W/kg)	1+4+7+8 Summed 1g SAR (W/kg)
			Tune-up Limit (dBm)	Tune-up Limit (dBm)	WWAN	LTE B13	Tune-up Limit-3 (dBm)	Tune-up Limit-3 (dBm)	WWAN	LTE B13	2.4GHz WLAN Ant 1+2	5GHz WLAN Ant 1+2	Bluetooth Chain 0	Bluetooth Chain 1					
			CC1	CC2	1g SAR (W/kg)	1g SAR (W/kg)	CC1	CC2	1g SAR (W/kg)	1g SAR (W/kg)	1g SAR (W/kg)	1g SAR (W/kg)	1g SAR (W/kg)	1g SAR (W/kg)					
LTE	LTE Band 2_LAT	Front	18.30	23.80	0.316	0.299	15.30	20.80	0.158	0.150	0.061	0.002	0.048	0.041	**0.369**	**0.310**	**0.371**	**0.358**	**0.351**
		Back	18.30	23.80	0.470	0.387	15.30	20.80	0.235	0.194	0.314	0.343	0.197	0.190	**0.743**	**0.772**	**1.086**	**0.969**	**0.962**
		Left side	18.30	23.80	0.054	0.228	15.30	20.80	0.027	0.114					**0.141**	**0.141**	**0.141**	**0.141**	**0.141**
		Right side	18.30	23.80	0.079	0.196	15.30	20.80	0.040	0.098	0.120	0.420	0.127	0.133	**0.258**	**0.558**	**0.678**	**0.685**	**0.691**
		Top side									0.081	0.068	0.309	0.054	**0.081**	**0.068**	**0.149**	**0.377**	**0.122**
		Bottom side	18.30	23.80	0.517	0.175	15.30	20.80	0.259	0.088					**0.346**	**0.346**	**0.346**	**0.346**	**0.346**
	LTE Band 66_LAT	Front	20.80	23.80	0.463	0.299	17.80	20.80	0.232	0.150	0.061	0.002	0.048	0.041	**0.442**	**0.383**	**0.444**	**0.431**	**0.424**
		Back	20.80	23.80	0.711	0.387	17.80	20.80	0.356	0.194	0.314	0.343	0.197	0.190	**0.863**	**0.892**	**1.206**	**1.089**	**1.082**
		Left side	20.80	23.80	0.171	0.228	17.80	20.80	0.086	0.114					**0.200**	**0.200**	**0.200**	**0.200**	**0.200**
		Right side	20.80	23.80	0.098	0.196	17.80	20.80	0.049	0.098	0.120	0.420	0.127	0.133	**0.267**	**0.567**	**0.687**	**0.694**	**0.700**
		Top side									0.081	0.068	0.309	0.054	**0.081**	**0.068**	**0.149**	**0.377**	**0.122**
		Bottom side	20.80	23.80	0.874	0.175	17.80	20.80	0.437	0.088					**0.525**	**0.525**	**0.525**	**0.525**	**0.525**

Body-worn			Standalone				UL CA active				WLAN				Inter-band UL CA summation				
WWAN Band		Exposure Position	CC1	CC2	CC1	CC2	CC1	CC2	1	8	2	4	6	7	1+2+8 Summed 1g SAR (W/kg)	1+4+8 Summed 1g SAR (W/kg)	1+2+4+8 Summed 1g SAR (W/kg)	1+4+6+8 Summed 1g SAR (W/kg)	1+4+7+8 Summed 1g SAR (W/kg)
			Tune-up Limit (dBm)	Tune-up Limit (dBm)	WWAN	LTE B12	Tune-up Limit (dBm)	Tune-up Limit (dBm)	WWAN	LTE B12	2.4GHz WLAN Ant 1+2	5GHz WLAN Ant 1+2	Bluetooth Chain 0	Bluetooth Chain 1					
					1g SAR (W/kg)	1g SAR (W/kg)			1g SAR (W/kg)	1g SAR (W/kg)	1g SAR (W/kg)	1g SAR (W/kg)	1g SAR (W/kg)	1g SAR (W/kg)					
LTE	LTE Band 2_LAT	Front	23.80	23.80	0.656	0.286	20.80	20.80	0.328	0.143	0.054	0.063	0.008	0.011	**0.525**	**0.534**	**0.588**	**0.542**	**0.545**
		Back	23.80	23.80	0.669	0.394	20.80	20.80	0.335	0.197	0.352	0.455	0.067	0.076	**0.884**	**0.987**	**1.339**	**1.054**	**1.063**
	LTE Band 66_LAT	Front	23.80	23.80	0.583	0.286	20.80	20.80	0.292	0.143	0.054	0.063	0.008	0.011	**0.489**	**0.498**	**0.552**	**0.506**	**0.509**
		Back	23.80	23.80	0.651	0.394	20.80	20.80	0.326	0.197	0.352	0.455	0.067	0.076	**0.875**	**0.978**	**1.330**	**1.045**	**1.054**

Body-worn			Standalone				UL CA active				WLAN				Inter-band UL CA summation				
WWAN Band		Exposure Position	CC1	CC2	CC1	CC2	CC1	CC2	1	8	2	4	6	7	1+2+8 Summed 1g SAR (W/kg)	1+4+8 Summed 1g SAR (W/kg)	1+2+4+8 Summed 1g SAR (W/kg)	1+4+6+8 Summed 1g SAR (W/kg)	1+4+7+8 Summed 1g SAR (W/kg)
			Tune-up Limit (dBm)	Tune-up Limit (dBm)	WWAN	LTE B13	Tune-up Limit-3 (dBm)	Tune-up Limit-3 (dBm)	WWAN	LTE B13	2.4GHz WLAN Ant 1+2	5GHz WLAN Ant 1+2	Bluetooth Chain 0	Bluetooth Chain 1					
			CC1	CC2	1g SAR (W/kg)	1g SAR (W/kg)	CC1	CC2	1g SAR (W/kg)	1g SAR (W/kg)	1g SAR (W/kg)	1g SAR (W/kg)	1g SAR (W/kg)	1g SAR (W/kg)					
LTE	LTE Band 2_LAT	Front	23.80	23.80	0.656	0.285	20.80	20.80	0.328	0.143	0.054	0.063	0.008	0.011	**0.525**	**0.534**	**0.588**	**0.542**	**0.545**
		Back	23.80	23.80	0.669	0.387	20.80	20.80	0.335	0.194	0.352	0.455	0.067	0.076	**0.880**	**0.983**	**1.335**	**1.050**	**1.059**
	LTE Band 66_LAT	Front	23.80	23.80	0.583	0.285	20.80	20.80	0.292	0.143	0.054	0.063	0.008	0.011	**0.488**	**0.497**	**0.551**	**0.505**	**0.508**
		Back	23.80	23.80	0.651	0.387	20.80	20.80	0.326	0.194	0.352	0.455	0.067	0.076	**0.871**	**0.974**	**1.326**	**1.041**	**1.050**

18.6 5G NR EN-DC consideration

<EN-DC combination and Maximum Power>

General Note:

1. NR implementation of n71, n5, n66, n2, and n41 is limited to EN-DC operations only (NSA), with LTE Bands 2/5/12/13/25/26/66/41 acting as anchor bands, SAR tests for NR Bands and LTE Anchors Bands were performed separately due to limitations in SAR probe calibration factors.
2. Following 5G NR n2/n5/n66/n71 support SCS 15KHz DFT/CP-OFDM, PI/2 BPSK/QPSK/16QAM/64QAM/256QAM, Bandwidth 5M/10M/15M/20M.
3. Following 5G NR n41 support SCS 30KHz DFT/CP-OFDM, PI/2 BPSK/QPSK/16QAM/64QAM/256QAM, Bandwidth 20M/40M/50M/60M/80M/90M/100M.
4. Test positions and test channels used for the testing below are based on the standalone SAR result. When the EN-DC active the LTE Anchors Band output power is equal or less than the standalone output power for each frequency bands, therefore, LTE Anchors Band power and SAR was estimated based on standalone results to performed sim-Tx analysis with 5G NR and WiFi and Bluetooth.
5. The single uplink 1g SAR values for each LTE Anchors Bands and 5G NR are both less than 0.8W/kg and the algebraic summation of the 1g SAR value are less than 1.45W/kg, additional measurements are not required according to TCBC workshop guidance, the detail sim-Tx analysis as following.

Exposure position	LAT EN-DC 5G NR combination					Combination
	LTE Single Carrier			NR Single Carrier		
	LTE Anchors Band	Standalone Maximum Power (dBm)	EN-DC Active Maximum Power (dBm)	Band	EN-DC Active Maximum Power (dBm)	
Head	LTE Band 12_LAT	23.80	23.80	N2_LAT	23.80	DC_12A_n2A /DC_5A_n2A
	LTE Band 5_LAT	23.80	23.80	N2_LAT	23.80	
	LTE Band 66_LAT	23.80	23.80	N5_LAT	23.80	DC_2A_n5A / DC_66A_n5A
	LTE Band 2/25_LAT	23.80	23.80	N5_LAT	23.80	
	LTE Band 12_LAT	23.80	23.80	N66_LAT	23.80	DC_13A_n66A/DC_5A_n66A/DC_12A_n66A
	LTE Band 13_LAT	23.80	23.80	N66_LAT	23.80	
	LTE Band 5_LAT	23.80	23.80	N66_LAT	23.80	
	LTE Band 66_LAT	23.80	23.80	N71_LAT	23.80	DC_2A_n71A/DC_66A_n71A
	LTE Band 2/25_UAT	23.80	23.80	N71_LAT	23.80	
	LTE Band 26_LAT	23.80	23.80	N41 TX0_LAT	23.80	DC_26A_n41A
Hotspot	LTE Band 12_LAT	23.80	22.30	N2_LAT	21.00	DC_12A_n2A /DC_5A_n2A
	LTE Band 5_LAT	23.80	23.80	N2_LAT	21.00	
	LTE Band 2/25_LAT	18.30	17.00	N5_LAT	23.30	DC_2A_n5A / DC_66A_n5A
	LTE Band 66_LAT	20.80	17.80	N5_LAT	23.30	
	LTE Band 13_LAT	23.80	23.80	N66_LAT	23.00	DC_13A_n66A/DC_5A_n66A/DC_12A_n66A
	LTE Band 5_LAT	23.80	23.80	N66_LAT	23.00	
	LTE Band 12_LAT	23.80	22.30	N66_LAT	23.00	
	LTE Band 2/25_LAT	18.30	17.00	N71_LAT	22.30	DC_2A_n71A/DC_66A_n71A
	LTE Band 66_LAT	20.80	17.80	N71_LAT	22.30	
	LTE Band 26_LAT	23.80	23.80	N41 TX0_LAT	21.00	DC_26A_n41A
Body-worn	LTE Band 12_LAT	23.80	23.80	N2_LAT	23.80	DC_12A_n2A /DC_5A_n2A
	LTE Band 5_LAT	23.80	22.80	N2_LAT	23.80	
	LTE Band 2/25_LAT	23.80	21.50	N5_LAT	23.80	DC_2A_n5A / DC_66A_n5A
	LTE Band 66_LAT	23.80	21.50	N5_LAT	23.80	
	LTE Band 13_LAT	23.80	22.80	N66_LAT	23.80	DC_13A_n66A/DC_5A_n66A/DC_12A_n66A
	LTE Band 5_LAT	23.80	22.80	N66_LAT	23.80	
	LTE Band 12_LAT	23.80	23.80	N66_LAT	23.80	
	LTE Band 2/25_LAT	23.80	21.50	N71_LAT	23.80	DC_2A_n71A/DC_66A_n71A
	LTE Band 66_LAT	23.80	21.50	N71_LAT	23.80	
	LTE Band 26_LAT	23.80	22.80	N41 TX0_LAT	23.80	DC_26A_n41A

<Head exposure condition>

NR Band	LTE Band	Exposure Position	LTE Standalone Maximum Power (dBm)	LTE Standalone 1g SAR (W/kg)	EN-DC Active LTE Maximum Power (dBm)	1 EN-DC Active Estimated LTE 1g SAR (W/kg)	2 NR 1g SAR (W/kg)	3 2.4GHz WLAN 1g SAR (W/kg)	4 5GHz WLAN 1g SAR (W/kg)	5 Bluetooth Chain 0 1g SAR (W/kg)	6 Bluetooth Chain 1 1g SAR (W/kg)	1+2+3 Summed 1g SAR (W/kg)	1+2+4+5 Summed 1g SAR (W/kg)	1+2+4+6 Summed 1g SAR (W/kg)
n2_LAT	LTE Band 12_LAT	Right Cheek	23.8	0.168	23.80	0.168	0.216	0.087	0.140	0.033	0.063	**0.471**	**0.557**	**0.587**
		Right Tilted	23.8	0.095	23.80	0.095	0.128	0.083	0.186	0.021	0.059	**0.306**	**0.430**	**0.468**
		Left Cheek	23.8	0.206	23.80	0.206	0.140	0.309	0.259	0.276	0.222	**0.655**	**0.881**	**0.827**
		Left Tilted	23.8	0.084	23.80	0.084	0.105	0.266	0.323	0.071	0.192	**0.455**	**0.583**	**0.704**
n2_LAT	LTE Band 5_LAT	Right Cheek	23.8	0.145	23.80	0.145	0.216	0.087	0.140	0.033	0.063	**0.448**	**0.534**	**0.564**
		Right Tilted	23.8	0.089	23.80	0.089	0.128	0.083	0.186	0.021	0.059	**0.300**	**0.424**	**0.462**
		Left Cheek	23.8	0.205	23.80	0.205	0.140	0.309	0.259	0.276	0.222	**0.654**	**0.880**	**0.826**
		Left Tilted	23.8	0.088	23.80	0.088	0.105	0.266	0.323	0.071	0.192	**0.459**	**0.587**	**0.708**

NR Band	LTE Band	Exposure Position	LTE Standalone Maximum Power (dBm)	LTE Standalone 1g SAR (W/kg)	EN-DC Active LTE Maximum Power (dBm)	1 EN-DC Active Estimated LTE 1g SAR (W/kg)	2 NR 1g SAR (W/kg)	3 2.4GHz WLAN 1g SAR (W/kg)	4 5GHz WLAN 1g SAR (W/kg)	5 Bluetooth Chain 0 1g SAR (W/kg)	6 Bluetooth Chain 1 1g SAR (W/kg)	1+2+3 Summed 1g SAR (W/kg)	1+2+4+5 Summed 1g SAR (W/kg)	1+2+4+6 Summed 1g SAR (W/kg)
n5_LAT	LTE Band 66_LAT	Right Cheek	23.8	0.272	23.80	0.272	0.111	0.087	0.140	0.033	0.063	**0.470**	**0.556**	**0.586**
		Right Tilted	23.8	0.141	23.80	0.141	0.070	0.083	0.186	0.021	0.059	**0.294**	**0.418**	**0.456**
		Left Cheek	23.8	0.228	23.80	0.228	0.157	0.309	0.259	0.276	0.222	**0.694**	**0.920**	**0.866**
		Left Tilted	23.8	0.099	23.80	0.099	0.068	0.266	0.323	0.071	0.192	**0.433**	**0.561**	**0.682**
n5_LAT	LTE Band 2/25_LAT	Right Cheek	23.8	0.355	23.80	0.355	0.111	0.087	0.140	0.033	0.063	**0.553**	**0.639**	**0.669**
		Right Tilted	23.8	0.184	23.80	0.184	0.070	0.083	0.186	0.021	0.059	**0.337**	**0.461**	**0.499**
		Left Cheek	23.8	0.178	23.80	0.178	0.157	0.309	0.259	0.276	0.222	**0.644**	**0.870**	**0.816**
		Left Tilted	23.8	0.137	23.80	0.137	0.068	0.266	0.323	0.071	0.192	**0.471**	**0.599**	**0.720**

NR Band	LTE Band	Exposure Position	LTE Standalone Maximum Power (dBm)	LTE Standalone 1g SAR (W/kg)	EN-DC Active LTE Maximum Power (dBm)	1 EN-DC Active Estimated LTE 1g SAR (W/kg)	2 NR 1g SAR (W/kg)	3 2.4GHz WLAN 1g SAR (W/kg)	4 5GHz WLAN 1g SAR (W/kg)	5 Bluetooth Chain 0 1g SAR (W/kg)	6 Bluetooth Chain 1 1g SAR (W/kg)	1+2+3 Summed 1g SAR (W/kg)	1+2+4+5 Summed 1g SAR (W/kg)	1+2+4+6 Summed 1g SAR (W/kg)
n66_LAT	LTE Band 12_LAT	Right Cheek	23.8	0.168	23.80	0.168	0.134	0.087	0.140	0.033	0.063	**0.389**	**0.475**	**0.505**
		Right Tilted	23.8	0.095	23.80	0.095	0.127	0.083	0.186	0.021	0.059	**0.305**	**0.429**	**0.467**
		Left Cheek	23.8	0.206	23.80	0.206	0.213	0.309	0.259	0.276	0.222	**0.728**	**0.954**	**0.900**
		Left Tilted	23.8	0.084	23.80	0.084	0.119	0.266	0.323	0.071	0.192	**0.469**	**0.597**	**0.718**
n66_LAT	LTE Band 13_LAT	Right Cheek	23.8	0.116	23.80	0.116	0.134	0.087	0.140	0.033	0.063	**0.337**	**0.423**	**0.453**
		Right Tilted	23.8	0.056	23.80	0.056	0.127	0.083	0.186	0.021	0.059	**0.266**	**0.390**	**0.428**
		Left Cheek	23.8	0.148	23.80	0.148	0.213	0.309	0.259	0.276	0.222	**0.670**	**0.896**	**0.842**
		Left Tilted	23.8	0.050	23.80	0.050	0.119	0.266	0.323	0.071	0.192	**0.435**	**0.563**	**0.684**
n66_LAT	LTE Band 5_LAT	Right Cheek	23.8	0.145	23.80	0.145	0.134	0.087	0.140	0.033	0.063	**0.366**	**0.452**	**0.482**
		Right Tilted	23.8	0.089	23.80	0.089	0.127	0.083	0.186	0.021	0.059	**0.299**	**0.423**	**0.461**
		Left Cheek	23.8	0.205	23.80	0.205	0.213	0.309	0.259	0.276	0.222	**0.727**	**0.953**	**0.899**
		Left Tilted	23.8	0.088	23.80	0.088	0.119	0.266	0.323	0.071	0.192	**0.473**	**0.601**	**0.722**

NR Band	LTE Band	Exposure Position	LTE Standalone Maximum Power (dBm)	LTE Standalone 1g SAR (W/kg)	EN-DC Active LTE Maximum Power (dBm)	1 EN-DC Active Estimated LTE 1g SAR (W/kg)	2 NR 1g SAR (W/kg)	3 2.4GHz WLAN 1g SAR (W/kg)	4 5GHz WLAN 1g SAR (W/kg)	5 Bluetooth Chain 0 1g SAR (W/kg)	6 Bluetooth Chain 1 1g SAR (W/kg)	1+2+3 Summed 1g SAR (W/kg)	1+2+4+5 Summed 1g SAR (W/kg)	1+2+4+6 Summed 1g SAR (W/kg)
n71_LAT	LTE Band 66_LAT	Right Cheek	23.8	0.272	23.80	0.272	0.107	0.087	0.140	0.033	0.063	**0.466**	**0.552**	**0.582**
		Right Tilted	23.8	0.141	23.80	0.141	0.052	0.083	0.186	0.021	0.059	**0.276**	**0.400**	**0.438**
		Left Cheek	23.8	0.228	23.80	0.228	0.144	0.309	0.259	0.276	0.222	**0.681**	**0.907**	**0.853**
		Left Tilted	23.8	0.099	23.80	0.099	0.050	0.266	0.323	0.071	0.192	**0.415**	**0.543**	**0.664**
n71_LAT	LTE Band 2/25_LAT	Right Cheek	23.8	0.355	23.80	0.355	0.107	0.087	0.140	0.033	0.063	**0.549**	**0.635**	**0.665**
		Right Tilted	23.8	0.184	23.80	0.184	0.052	0.083	0.186	0.021	0.059	**0.319**	**0.443**	**0.481**
		Left Cheek	23.8	0.178	23.80	0.178	0.144	0.309	0.259	0.276	0.222	**0.631**	**0.857**	**0.803**
		Left Tilted	23.8	0.137	23.80	0.137	0.050	0.266	0.323	0.071	0.192	**0.453**	**0.581**	**0.702**

NR Band	LTE Band	Exposure Position	LTE Standalone Maximum Power (dBm)	LTE Standalone 1g SAR (W/kg)	EN-DC Active LTE Maximum Power (dBm)	1 EN-DC Active Estimated LTE 1g SAR (W/kg)	2 NR 1g SAR (W/kg)	3 2.4GHz WLAN 1g SAR (W/kg)	4 5GHz WLAN 1g SAR (W/kg)	5 Bluetooth Chain 0 1g SAR (W/kg)	6 Bluetooth Chain 1 1g SAR (W/kg)	1+2+3 Summed 1g SAR (W/kg)	1+2+4+5 Summed 1g SAR (W/kg)	1+2+4+6 Summed 1g SAR (W/kg)
n41_LAT	LTE Band 26_LAT	Right Cheek	23.8	0.082	23.80	0.082	0.135	0.087	0.140	0.033	0.063	**0.304**	**0.390**	**0.420**
		Right Tilted	23.8	0.091	23.80	0.091	0.177	0.083	0.186	0.021	0.059	**0.351**	**0.475**	**0.513**
		Left Cheek	23.8	0.199	23.80	0.199	0.249	0.309	0.259	0.276	0.222	**0.757**	**0.983**	**0.929**
		Left Tilted	23.8	0.073	23.80	0.073	0.141	0.266	0.323	0.071	0.192	**0.480**	**0.608**	**0.729**

<Hotspot exposure condition>

NR Band	LTE Band	Exposure Position	LTE Standalone Maximum Power (dBm)	LTE Standalone 1g SAR (W/kg)	EN-DC Active LTE Maximum Power (dBm)	1 EN-DC Active Estimated LTE 1g SAR (W/kg)	2 NR 1g SAR (W/kg)	3 2.4GHz WLAN 1g SAR (W/kg)	4 5GHz WLAN 1g SAR (W/kg)	5 Bluetooth Chain 0 1g SAR (W/kg)	6 Bluetooth Chain 1 1g SAR (W/kg)	1+2+3 Summed 1g SAR (W/kg)	1+2+4+5 Summed 1g SAR (W/kg)	1+2+4+6 Summed 1g SAR (W/kg)
n2_LAT	LTE Band 12_LAT	Front	23.80	0.296	22.30	0.210	0.462	0.061	0.002	0.048	0.041	**0.733**	**0.722**	**0.715**
		Back	23.80	0.563	22.30	0.399	0.534	0.314	0.343	0.197	0.190	**1.246**	**1.472**	**1.465**
		Left side	23.80	0.275	22.30	0.195	0.091					**0.286**	**0.286**	**0.286**
		Right side	23.80	0.232	22.30	0.164	0.099	0.120	0.420	0.127	0.133	**0.383**	**0.810**	**0.816**
		Top side	23.80		22.30			0.081	0.068	0.309	0.054	**0.081**	**0.377**	**0.122**
		Bottom side	23.80	0.188	22.30	0.133	0.676					**0.809**	**0.809**	**0.809**
n2_LAT	LTE Band 5_LAT	Front	23.80	0.334	23.80	0.334	0.462	0.061	0.002	0.048	0.041	**0.857**	**0.846**	**0.839**
		Back	23.80	0.414	23.80	0.414	0.534	0.314	0.343	0.197	0.190	**1.262**	**1.488**	**1.481**
		Left side	23.80	0.172	23.80	0.172	0.091					**0.263**	**0.263**	**0.263**
		Right side	23.80	0.210	23.80	0.210	0.099	0.120	0.420	0.127	0.133	**0.429**	**0.856**	**0.862**
		Top side	23.80		23.80			0.081	0.068	0.309	0.054	**0.081**	**0.377**	**0.122**
		Bottom side	23.80	0.259	23.80	0.259	0.676					**0.935**	**0.935**	**0.935**

NR Band	LTE Band	Exposure Position	LTE Standalone Maximum Power (dBm)	LTE Standalone 1g SAR (W/kg)	EN-DC Active LTE Maximum Power (dBm)	1 EN-DC Active Estimated LTE 1g SAR (W/kg)	2 NR 1g SAR (W/kg)	3 2.4GHz WLAN 1g SAR (W/kg)	4 5GHz WLAN 1g SAR (W/kg)	5 Bluetooth Chain 0 1g SAR (W/kg)	6 Bluetooth Chain 1 1g SAR (W/kg)	1+2+3 Summed 1g SAR (W/kg)	1+2+4+5 Summed 1g SAR (W/kg)	1+2+4+6 Summed 1g SAR (W/kg)
n5_LAT	LTE Band 2/25_LAT	Front	18.30	0.316	17.00	0.234	0.191	0.061	0.002	0.048	0.041	**0.486**	**0.475**	**0.468**
		Back	18.30	0.470	17.00	0.348	0.256	0.314	0.343	0.197	0.190	**0.919**	**1.145**	**1.138**
		Left side	18.30	0.054	17.00	0.040	0.095					**0.135**	**0.135**	**0.135**
		Right side	18.30	0.079	17.00	0.059	0.163	0.120	0.420	0.127	0.133	**0.342**	**0.769**	**0.775**
		Top side	18.30		17.00			0.081	0.068	0.309	0.054	**0.081**	**0.377**	**0.122**
		Bottom side	18.30	0.517	17.00	0.383	0.139					**0.523**	**0.523**	**0.523**
n5_LAT	LTE Band 66_LAT	Front	20.80	0.463	17.80	0.232	0.191	0.061	0.002	0.048	0.041	**0.484**	**0.473**	**0.466**
		Back	20.80	0.711	17.80	0.356	0.256	0.314	0.343	0.197	0.190	**0.927**	**1.153**	**1.146**
		Left side	20.80	0.171	17.80	0.086	0.095					**0.181**	**0.181**	**0.181**
		Right side	20.80	0.098	17.80	0.049	0.163	0.120	0.420	0.127	0.133	**0.333**	**0.760**	**0.766**
		Top side	20.80		17.80			0.081	0.068	0.309	0.054	**0.081**	**0.377**	**0.122**
		Bottom side	20.80	0.874	17.80	0.438	0.139					**0.577**	**0.577**	**0.577**

NR Band	LTE Band	Exposure Position	LTE Standalone Maximum Power (dBm)	LTE Standalone 1g SAR (W/kg)	EN-DC Active LTE Maximum Power (dBm)	1 EN-DC Active Estimated LTE 1g SAR (W/kg)	2 NR 1g SAR (W/kg)	3 2.4GHz WLAN 1g SAR (W/kg)	4 5GHz WLAN 1g SAR (W/kg)	5 Bluetooth Chain 0 1g SAR (W/kg)	6 Bluetooth Chain 1 1g SAR (W/kg)	1+2+3 Summed 1g SAR (W/kg)	1+2+4+5 Summed 1g SAR (W/kg)	1+2+4+6 Summed 1g SAR (W/kg)
n66_LAT	LTE Band 13_LAT	Front	23.80	0.299	23.80	0.299	0.501	0.061	0.002	0.048	0.041	**0.861**	**0.850**	**0.843**
		Back	23.80	0.387	23.80	0.387	0.583	0.314	0.343	0.197	0.190	**1.284**	**1.510**	**1.503**
		Left side	23.80	0.228	23.80	0.228	0.223					**0.451**	**0.451**	**0.451**
		Right side	23.80	0.196	23.80	0.196	0.147	0.120	0.420	0.127	0.133	**0.463**	**0.890**	**0.896**
		Top side	23.80		23.80			0.081	0.068	0.309	0.054	**0.081**	**0.377**	**0.122**
		Bottom side	23.80	0.175	23.80	0.175	0.798					**0.973**	**0.973**	**0.973**
n66_LAT	LTE Band 5_LAT	Front	23.80	0.334	23.80	0.334	0.501	0.061	0.002	0.048	0.041	**0.896**	**0.885**	**0.878**
		Back	23.80	0.414	23.80	0.414	0.583	0.314	0.343	0.197	0.190	**1.311**	**1.537**	**1.530**
		Left side	23.80	0.172	23.80	0.172	0.223					**0.395**	**0.395**	**0.395**
		Right side	23.80	0.210	23.80	0.210	0.147	0.120	0.420	0.127	0.133	**0.477**	**0.904**	**0.910**
		Top side	23.80		23.80			0.081	0.068	0.309	0.054	**0.081**	**0.377**	**0.122**
		Bottom side	23.80	0.259	23.80	0.259	0.798					**1.057**	**1.057**	**1.057**
n66_LAT	LTE Band 12_LAT	Front	23.80	0.296	22.30	0.210	0.501	0.061	0.002	0.048	0.041	**0.771**	**0.760**	**0.753**
		Back	23.80	0.563	22.30	0.399	0.583	0.314	0.343	0.197	0.190	**1.295**	**1.521**	**1.514**
		Left side	23.80	0.275	22.30	0.195	0.223					**0.418**	**0.418**	**0.418**
		Right side	23.80	0.232	22.30	0.164	0.147	0.120	0.420	0.127	0.133	**0.432**	**0.859**	**0.865**
		Top side	23.80		22.30			0.081	0.068	0.309	0.054	**0.081**	**0.377**	**0.122**
		Bottom side	23.80	0.188	22.30	0.133	0.798					**0.931**	**0.931**	**0.931**

NR Band	LTE Band	Exposure Position	LTE Standalone Maximum Power (dBm)	LTE Standalone 1g SAR (W/kg)	EN-DC Active LTE Maximum Power (dBm)	1 EN-DC Active Estimated LTE 1g SAR (W/kg)	2 NR 1g SAR (W/kg)	3 2.4GHz WLAN 1g SAR (W/kg)	4 5GHz WLAN 1g SAR (W/kg)	5 Bluetooth Chain 0 1g SAR (W/kg)	6 Bluetooth Chain 1 1g SAR (W/kg)	1+2+3 Summed 1g SAR (W/kg)	1+2+4+5 Summed 1g SAR (W/kg)	1+2+4+6 Summed 1g SAR (W/kg)
n71_LAT	LTE Band 2/25_LAT	Front	18.30	0.316	17.00	0.234	0.155	0.061	0.002	0.048	0.041	**0.450**	**0.439**	**0.432**
		Back	18.30	0.470	17.00	0.348	0.194	0.314	0.343	0.197	0.190	**0.857**	**1.083**	**1.076**
		Left side	18.30	0.054	17.00	0.040	0.068					**0.108**	**0.108**	**0.108**
		Right side	18.30	0.079	17.00	0.059	0.137	0.120	0.420	0.127	0.133	**0.315**	**0.742**	**0.748**
		Top side	18.30		17.00			0.081	0.068	0.309	0.054	**0.081**	**0.377**	**0.122**
		Bottom side	18.30	0.517	17.00	0.383	0.095					**0.479**	**0.479**	**0.479**
n71_LAT	LTE Band 66_LAT	Front	20.80	0.463	17.80	0.232	0.155	0.061	0.002	0.048	0.041	**0.448**	**0.437**	**0.430**
		Back	20.80	0.711	17.80	0.356	0.194	0.314	0.343	0.197	0.190	**0.865**	**1.091**	**1.084**
		Left side	20.80	0.171	17.80	0.086	0.068					**0.154**	**0.154**	**0.154**
		Right side	20.80	0.098	17.80	0.049	0.137	0.120	0.420	0.127	0.133	**0.306**	**0.733**	**0.739**
		Top side	20.80		17.80			0.081	0.068	0.309	0.054	**0.081**	**0.377**	**0.122**
		Bottom side	20.80	0.874	17.80	0.438	0.095					**0.534**	**0.534**	**0.534**

NR Band	LTE Band	Exposure Position	LTE Standalone Maximum Power (dBm)	LTE Standalone 1g SAR (W/kg)	EN-DC Active LTE Maximum Power (dBm)	1 EN-DC Active Estimated LTE 1g SAR (W/kg)	2 NR 1g SAR (W/kg)	3 2.4GHz WLAN 1g SAR (W/kg)	4 5GHz WLAN 1g SAR (W/kg)	5 Bluetooth Chain 0 1g SAR (W/kg)	6 Bluetooth Chain 1 1g SAR (W/kg)	1+2+3 Summed 1g SAR (W/kg)	1+2+4+5 Summed 1g SAR (W/kg)	1+2+4+6 Summed 1g SAR (W/kg)
n41_LAT	LTE Band 26_LAT	Front	23.80	0.382	23.80	0.382	0.387	0.061	0.002	0.048	0.041	**0.830**	**0.819**	**0.812**
		Back	23.80	0.536	23.80	0.536	0.446	0.314	0.343	0.197	0.190	**1.296**	**1.522**	**1.515**
		Left side	23.80	0.186	23.80	0.186	0.124					**0.310**	**0.310**	**0.310**
		Right side	23.80	0.221	23.80	0.221	0.125	0.120	0.420	0.127	0.133	**0.466**	**0.893**	**0.899**
		Top side	23.80		23.80			0.081	0.068	0.309	0.054	**0.081**	**0.377**	**0.122**
		Bottom side	23.80	0.196	23.80	0.196	0.428					**0.624**	**0.624**	**0.624**

<Body-worn exposure condition>

NR Band	LTE Band	Exposure Position	LTE Standalone Maximum Power (dBm)	LTE Standalone 1g SAR (W/kg)	EN-DC Active LTE Maximum Power (dBm)	1 EN-DC Active Estimated LTE 1g SAR (W/kg)	2 NR 1g SAR (W/kg)	3 2.4GHz WLAN 1g SAR (W/kg)	4 5GHz WLAN 1g SAR (W/kg)	5 Bluetooth Chain 0 1g SAR (W/kg)	6 Bluetooth Chain 1 1g SAR (W/kg)	1+2+3 Summed 1g SAR (W/kg)	1+2+4+5 Summed 1g SAR (W/kg)	1+2+4+6 Summed 1g SAR (W/kg)
n2_LAT	LTE Band 12_LAT	Front	23.80	0.286	23.80	0.286	0.524	0.054	0.063	0.008	0.011	**0.864**	**0.881**	**0.884**
		Back	23.80	0.394	23.80	0.394	0.562	0.352	0.455	0.067	0.076	**1.308**	**1.478**	**1.487**
n2_LAT	LTE Band 5_LAT	Front	23.80	0.235	22.80	0.187	0.524	0.054	0.063	0.260	0.076	**0.765**	**1.034**	**0.850**
		Back	23.80	0.331	22.80	0.263	0.562	0.352	0.455	0.260	0.076	**1.177**	**1.540**	**1.356**

NR Band	LTE Band	Exposure Position	LTE Standalone Maximum Power (dBm)	LTE Standalone 1g SAR (W/kg)	EN-DC Active LTE Maximum Power (dBm)	1 EN-DC Active Estimated LTE 1g SAR (W/kg)	2 NR 1g SAR (W/kg)	3 2.4GHz WLAN 1g SAR (W/kg)	4 5GHz WLAN 1g SAR (W/kg)	5 Bluetooth Chain 0 1g SAR (W/kg)	6 Bluetooth Chain 1 1g SAR (W/kg)	1+2+3 Summed 1g SAR (W/kg)	1+2+4+5 Summed 1g SAR (W/kg)	1+2+4+6 Summed 1g SAR (W/kg)
n5_LAT	LTE Band 2/25_LAT	Front	23.80	0.656	21.50	0.386	0.169	0.054	0.063	0.008	0.011	**0.610**	**0.627**	**0.630**
		Back	23.80	0.669	21.50	0.394	0.230	0.352	0.455	0.067	0.076	**0.976**	**1.146**	**1.155**
n5_LAT	LTE Band 66_LAT	Front	23.80	0.583	21.50	0.343	0.169	0.054	0.063	0.260	0.076	**0.567**	**0.836**	**0.652**
		Back	23.80	0.651	21.50	0.383	0.230	0.352	0.455	0.260	0.076	**0.965**	**1.328**	**1.144**

NR Band	LTE Band	Exposure Position	LTE Standalone Maximum Power (dBm)	LTE Standalone 1g SAR (W/kg)	EN-DC Active LTE Maximum Power (dBm)	1 EN-DC Active Estimated LTE 1g SAR (W/kg)	2 NR 1g SAR (W/kg)	3 2.4GHz WLAN 1g SAR (W/kg)	4 5GHz WLAN 1g SAR (W/kg)	5 Bluetooth Chain 0 1g SAR (W/kg)	6 Bluetooth Chain 1 1g SAR (W/kg)	1+2+3 Summed 1g SAR (W/kg)	1+2+4+5 Summed 1g SAR (W/kg)	1+2+4+6 Summed 1g SAR (W/kg)
n66_LAT	LTE Band 13_LAT	Front	23.80	0.285	22.80	0.226	0.378	0.054	0.063	0.008	0.011	**0.659**	**0.676**	**0.679**
		Back	23.80	0.387	22.80	0.307	0.432	0.352	0.455	0.067	0.076	**1.092**	**1.262**	**1.271**
n66_LAT	LTE Band 5_LAT	Front	23.80	0.235	22.80	0.187	0.378	0.054	0.063	0.008	0.011	**0.619**	**0.636**	**0.639**
		Back	23.80	0.331	22.80	0.263	0.432	0.352	0.455	0.067	0.076	**1.047**	**1.217**	**1.226**
n66_LAT	LTE Band 12_LAT	Front	23.80	0.286	23.80	0.286	0.378	0.054	0.063	0.260	0.076	**0.718**	**0.987**	**0.803**
		Back	23.80	0.394	23.80	0.394	0.432	0.352	0.455	0.260	0.076	**1.178**	**1.541**	**1.357**

NR Band	LTE Band	Exposure Position	LTE Standalone Maximum Power (dBm)	LTE Standalone 1g SAR (W/kg)	EN-DC Active LTE Maximum Power (dBm)	1 EN-DC Active Estimated LTE 1g SAR (W/kg)	2 NR 1g SAR (W/kg)	3 2.4GHz WLAN 1g SAR (W/kg)	4 5GHz WLAN 1g SAR (W/kg)	5 Bluetooth Chain 0 1g SAR (W/kg)	6 Bluetooth Chain 1 1g SAR (W/kg)	1+2+3 Summed 1g SAR (W/kg)	1+2+4+5 Summed 1g SAR (W/kg)	1+2+4+6 Summed 1g SAR (W/kg)
n71_LAT	LTE Band 2/25_LAT	Front	23.80	0.656	21.50	0.386	0.175	0.054	0.063	0.008	0.011	**0.616**	**0.633**	**0.636**
		Back	23.80	0.669	21.50	0.394	0.251	0.352	0.455	0.067	0.076	**0.997**	**1.167**	**1.176**
n71_LAT	LTE Band 66_LAT	Front	23.80	0.583	21.50	0.343	0.175	0.054	0.063	0.260	0.076	**0.573**	**0.842**	**0.658**
		Back	23.80	0.651	21.50	0.383	0.251	0.352	0.455	0.260	0.076	**0.987**	**1.350**	**1.166**

NR Band	LTE Band	Exposure Position	LTE Standalone Maximum Power (dBm)	LTE Standalone 1g SAR (W/kg)	EN-DC Active LTE Maximum Power (dBm)	1 EN-DC Active Estimated LTE 1g SAR (W/kg)	2 NR 1g SAR (W/kg)	3 2.4GHz WLAN 1g SAR (W/kg)	4 5GHz WLAN 1g SAR (W/kg)	5 Bluetooth Chain 0 1g SAR (W/kg)	6 Bluetooth Chain 1 1g SAR (W/kg)	1+2+3 Summed 1g SAR (W/kg)	1+2+4+5 Summed 1g SAR (W/kg)	1+2+4+6 Summed 1g SAR (W/kg)
n41_LAT	LTE Band 26_LAT	Front	23.80	0.249	22.80	0.198	0.404	0.054	0.063	0.008	0.011	**0.656**	**0.673**	**0.676**
		Back	23.80	0.403	22.80	0.320	0.492	0.352	0.455	0.067	0.076	**1.164**	**1.334**	**1.343**

Exposure position	UAT EN-DC 5G NR combination					Combination
	LTE Single Carrier			NR Single Carrier		
	LTE Anchors Band	Standalone Maximum Power (dBm)	EN-DC Active Maximum Power (dBm)	Band	EN-DC Active Maximum Power (dBm)	
Head	LTE Band 12_UAT	20.30	17.50	N2_UAT	15.00	DC_12A_n2A /DC_5A_n2A
	LTE Band 5_UAT	20.80	17.80	N2_UAT	15.00	
	LTE Band 66_UAT	13.00	13.00	N5_UAT	20.00	DC_2A_n5A / DC_66A_n5A
	LTE Band 25_UAT	13.50	12.00	N5_UAT	20.00	
	LTE Band 12_UAT	20.30	17.50	N66_UAT	14.50	DC_13A_n66A/DC_5A_n66A/DC_12A_n66A
	LTE Band 13_UAT	21.30	18.30	N66_UAT	14.50	
	LTE Band 5_UAT	20.80	17.80	N66_UAT	14.50	
	LTE Band 66_UAT	13.00	13.00	N71_UAT	19.00	DC_2A_n71A/DC_66A_n71A
	LTE Band 2/25_UAT	13.50	12.00	N71_UAT	19.00	
	LTE Band 26_UAT	20.80	17.00	N41 TX0_UAT	16.50	DC_26A_n41A
	LTE Band 66_LAT	23.80	23.80	N41 TX1_UAT	16.50	DC_25A_n41A/DC_2A_N41A/DC_66A_n41A
	LTE Band 2/25_LAT	23.80	23.80	N41 TX1_UAT	16.50	
	LTE Band 41_LAT	23.80	23.80	N41 TX1_HPUE_UAT	16.50	DC_41A_n41A
Hotspot	LTE Band 12_UAT	23.80	18.00	N2_UAT	19.50	DC_12A_n2A /DC_5A_n2A
	LTE Band 5_UAT	22.80	17.50	N2_UAT	19.50	
	LTE Band 2/25_UAT	16.50	16.50	N5_UAT	20.00	DC_2A_n5A / DC_66A_n5A
	LTE Band 66_UAT	22.00	20.50	N5_UAT	20.00	
	LTE Band 13_UAT	22.30	18.00	N66_UAT	20.00	DC_13A_n66A/DC_5A_n66A/DC_12A_n66A
	LTE Band 5_UAT	22.80	17.50	N66_UAT	20.00	
	LTE Band 12_UAT	23.80	18.00	N66_UAT	20.00	
	LTE Band 2/25_UAT	16.50	16.50	N71_UAT	20.00	DC_2A_n71A/DC_66A_n71A
	LTE Band 66_UAT	22.00	20.50	N71_UAT	20.00	
	LTE Band 26_UAT	22.30	20.00	N41 TX0_UAT	19.50	DC_26A_n41A
	LTE Band 2/25_LAT	18.30	17.00	N41 TX1_UAT	19.50	DC_25A_n41A/DC_2A_N41A/DC_66A_n41A
	LTE Band 66_LAT	20.80	17.80	N41 TX1_UAT	19.50	
	LTE Band 41_LAT	23.30	19.00	N41 TX1_HPUE_UAT	19.50	DC_41A_n41A
Body-worn	LTE Band 12_UAT	23.80	23.80	N2_UAT	22.00	DC_12A_n2A /DC_5A_n2A
	LTE Band 5_UAT	23.80	22.80	N2_UAT	22.00	
	LTE Band 2/25_UAT	22.00	22.00	N5_UAT	23.80	DC_2A_n5A / DC_66A_n5A
	LTE Band 66_UAT	22.00	22.00	N5_UAT	23.80	
	LTE Band 13_UAT	23.80	22.80	N66_UAT	22.00	DC_13A_n66A/DC_5A_n66A/DC_12A_n66A
	LTE Band 5_UAT	23.80	22.80	N66_UAT	22.00	
	LTE Band 12_UAT	23.80	23.80	N66_UAT	22.00	
	LTE Band 2/25_UAT	22.00	22.00	N71_UAT	23.80	DC_2A_n71A/DC_66A_n71A
	LTE Band 66_UAT	22.00	22.00	N71_UAT	23.80	
	LTE Band 26_UAT	23.80	22.80	N41 TX0_UAT	23.00	DC_26A_n41A
	LTE Band 2/25_LAT	23.80	21.50	N41 TX1_UAT	23.00	DC_25A_n41A/DC_2A_N41A/DC_66A_n41A
	LTE Band 66_LAT	23.80	21.50	N41 TX1_UAT	23.00	
	LTE Band 41_LAT	23.80	22.50	N41 TX1_HPUE_UAT	23.00	DC_41A_n41A

<Head exposure condition>

NR Band	LTE Band	Exposure Position	LTE Standalone Maximum Power (dBm)	LTE Standalone 1g SAR (W/kg)	EN-DC Active LTE Maximum Power (dBm)	1 EN-DC Active Estimated LTE 1g SAR (W/kg)	2 NR 1g SAR (W/kg)	3 2.4GHz WLAN 1g SAR (W/kg)	4 5GHz WLAN 1g SAR (W/kg)	5 Bluetooth Chain 0 1g SAR (W/kg)	6 Bluetooth Chain 1 1g SAR (W/kg)	1+2+3 Summed 1g SAR (W/kg)	1+2+4+5 Summed 1g SAR (W/kg)	1+2+4+6 Summed 1g SAR (W/kg)
n2_UAT	LTE Band 12_UAT	Right Cheek	20.30	0.519	17.50	0.272	0.541	0.087	0.140	0.033	0.063	**0.900**	**0.986**	**1.016**
		Right Tilted	20.30	0.106	17.50	0.056	0.720	0.083	0.186	0.021	0.059	**0.859**	**0.983**	**1.021**
		Left Cheek	20.30	0.605	17.50	0.318	0.365	0.309	0.259	0.276	0.222	**0.992**	**1.218**	**1.164**
		Left Tilted	20.30	0.110	17.50	0.058	0.498	0.266	0.323	0.071	0.192	**0.822**	**0.950**	**1.071**
n2_UAT	LTE Band 5_UAT	Right Cheek	20.80	0.413	17.80	0.207	0.541	0.087	0.140	0.033	0.063	**0.835**	**0.921**	**0.951**
		Right Tilted	20.80	0.090	17.80	0.045	0.720	0.083	0.186	0.021	0.059	**0.848**	**0.972**	**1.010**
		Left Cheek	20.80	0.604	17.80	0.303	0.365	0.309	0.259	0.276	0.222	**0.977**	**1.203**	**1.149**
		Left Tilted	20.80	0.092	17.80	0.046	0.498	0.266	0.323	0.071	0.192	**0.810**	**0.938**	**1.059**

NR Band	LTE Band	Exposure Position	LTE Standalone Maximum Power (dBm)	LTE Standalone 1g SAR (W/kg)	EN-DC Active LTE Maximum Power (dBm)	1 EN-DC Active Estimated LTE 1g SAR (W/kg)	2 NR 1g SAR (W/kg)	3 2.4GHz WLAN 1g SAR (W/kg)	4 5GHz WLAN 1g SAR (W/kg)	5 Bluetooth Chain 0 1g SAR (W/kg)	6 Bluetooth Chain 1 1g SAR (W/kg)	1+2+3 Summed 1g SAR (W/kg)	1+2+4+5 Summed 1g SAR (W/kg)	1+2+4+6 Summed 1g SAR (W/kg)
n5_UAT	LTE Band 66_UAT	Right Cheek	13.00	0.509	13.00	0.509	0.253	0.087	0.140	0.033	0.063	**0.849**	**0.935**	**0.965**
		Right Tilted	13.00	0.736	13.00	0.736	0.092	0.083	0.186	0.021	0.059	**0.911**	**1.035**	**1.073**
		Left Cheek	13.00	0.345	13.00	0.345	0.359	0.309	0.259	0.276	0.222	**1.013**	**1.239**	**1.185**
		Left Tilted	13.00	0.465	13.00	0.465	0.037	0.266	0.323	0.071	0.192	**0.768**	**0.896**	**1.017**
n5_UAT	LTE Band 2/25_UAT	Right Cheek	13.50	0.687	12.00	0.486	0.253	0.087	0.140	0.033	0.063	**0.826**	**0.912**	**0.942**
		Right Tilted	13.50	0.896	12.00	0.634	0.092	0.083	0.186	0.021	0.059	**0.809**	**0.933**	**0.971**
		Left Cheek	13.50	0.533	12.00	0.377	0.359	0.309	0.259	0.276	0.222	**1.045**	**1.271**	**1.217**
		Left Tilted	13.50	0.639	12.00	0.452	0.037	0.266	0.323	0.071	0.192	**0.755**	**0.883**	**1.004**

NR Band	LTE Band	Exposure Position	LTE Standalone Maximum Power (dBm)	LTE Standalone 1g SAR (W/kg)	EN-DC Active LTE Maximum Power (dBm)	1 EN-DC Active Estimated LTE 1g SAR (W/kg)	2 NR 1g SAR (W/kg)	3 2.4GHz WLAN 1g SAR (W/kg)	4 5GHz WLAN 1g SAR (W/kg)	5 Bluetooth Chain 0 1g SAR (W/kg)	6 Bluetooth Chain 1 1g SAR (W/kg)	1+2+3 Summed 1g SAR (W/kg)	1+2+4+5 Summed 1g SAR (W/kg)	1+2+4+6 Summed 1g SAR (W/kg)
n66_UAT	LTE Band 12_UAT	Right Cheek	20.30	0.519	17.50	0.272	0.444	0.087	0.140	0.033	0.063	**0.803**	**0.889**	**0.919**
		Right Tilted	20.30	0.106	17.50	0.056	0.657	0.083	0.186	0.021	0.059	**0.796**	**0.920**	**0.958**
		Left Cheek	20.30	0.605	17.50	0.318	0.310	0.309	0.259	0.276	0.222	**0.937**	**1.163**	**1.109**
		Left Tilted	20.30	0.110	17.50	0.058	0.335	0.266	0.323	0.071	0.192	**0.659**	**0.787**	**0.908**
n66_UAT	LTE Band 13_UAT	Right Cheek	21.30	0.550	18.30	0.276	0.444	0.087	0.140	0.033	0.063	**0.807**	**0.893**	**0.923**
		Right Tilted	21.30	0.113	18.30	0.057	0.657	0.083	0.186	0.021	0.059	**0.797**	**0.921**	**0.959**
		Left Cheek	21.30	0.714	18.30	0.358	0.310	0.309	0.259	0.276	0.222	**0.977**	**1.203**	**1.149**
		Left Tilted	21.30	0.111	18.30	0.056	0.335	0.266	0.323	0.071	0.192	**0.657**	**0.785**	**0.906**
n66_UAT	LTE Band 5_UAT	Right Cheek	20.80	0.413	17.80	0.207	0.444	0.087	0.140	0.033	0.063	**0.738**	**0.824**	**0.854**
		Right Tilted	20.80	0.090	17.80	0.045	0.657	0.083	0.186	0.021	0.059	**0.785**	**0.909**	**0.947**
		Left Cheek	20.80	0.604	17.80	0.303	0.310	0.309	0.259	0.276	0.222	**0.922**	**1.148**	**1.094**
		Left Tilted	20.80	0.092	17.80	0.046	0.335	0.266	0.323	0.071	0.192	**0.647**	**0.775**	**0.896**

NR Band	LTE Band	Exposure Position	LTE Standalone Maximum Power (dBm)	LTE Standalone 1g SAR (W/kg)	EN-DC Active LTE Maximum Power (dBm)	1 EN-DC Active Estimated LTE 1g SAR (W/kg)	2 NR 1g SAR (W/kg)	3 2.4GHz WLAN 1g SAR (W/kg)	4 5GHz WLAN 1g SAR (W/kg)	5 Bluetooth Chain 0 1g SAR (W/kg)	6 Bluetooth Chain 1 1g SAR (W/kg)	1+2+3 Summed 1g SAR (W/kg)	1+2+4+5 Summed 1g SAR (W/kg)	1+2+4+6 Summed 1g SAR (W/kg)
n71_UAT	LTE Band 66_UAT	Right Cheek	13.00	0.509	13.00	0.509	0.216	0.087	0.140	0.033	0.063	**0.812**	**0.898**	**0.928**
		Right Tilted	13.00	0.736	13.00	0.736	0.046	0.083	0.186	0.021	0.059	**0.865**	**0.989**	**1.027**
		Left Cheek	13.00	0.345	13.00	0.345	0.280	0.309	0.259	0.276	0.222	**0.934**	**1.160**	**1.106**
		Left Tilted	13.00	0.465	13.00	0.465	0.042	0.266	0.323	0.071	0.192	**0.773**	**0.901**	**1.022**
n71_UAT	LTE Band 2/25_UAT	Right Cheek	13.50	0.687	12.00	0.486	0.216	0.087	0.140	0.033	0.063	**0.789**	**0.875**	**0.905**
		Right Tilted	13.50	0.896	12.00	0.634	0.046	0.083	0.186	0.021	0.059	**0.763**	**0.887**	**0.925**
		Left Cheek	13.50	0.533	12.00	0.377	0.280	0.309	0.259	0.276	0.222	**0.966**	**1.192**	**1.138**
		Left Tilted	13.50	0.639	12.00	0.452	0.042	0.266	0.323	0.071	0.192	**0.760**	**0.888**	**1.009**

NR Band	LTE Band	Exposure Position	LTE Standalone Maximum Power (dBm)	LTE Standalone 1g SAR (W/kg)	EN-DC Active LTE Maximum Power (dBm)	1 EN-DC Active Estimated LTE 1g SAR (W/kg)	2 NR 1g SAR (W/kg)	3 2.4GHz WLAN 1g SAR (W/kg)	4 5GHz WLAN 1g SAR (W/kg)	5 Bluetooth Chain 0 1g SAR (W/kg)	6 Bluetooth Chain 1 1g SAR (W/kg)	1+2+3 Summed 1g SAR (W/kg)	1+2+4+5 Summed 1g SAR (W/kg)	1+2+4+6 Summed 1g SAR (W/kg)
n41_UAT	LTE Band 26_UAT	Right Cheek	20.80	0.291	17.00	0.121	0.694	0.087	0.140	0.033	0.063	**0.902**	**0.988**	**1.018**
		Right Tilted	20.80	0.085	17.00	0.035	0.750	0.083	0.186	0.021	0.059	**0.868**	**0.992**	**1.030**
		Left Cheek	20.80	0.712	17.00	0.297	0.410	0.309	0.259	0.276	0.222	**1.016**	**1.242**	**1.188**
		Left Tilted	20.80	0.104	17.00	0.043	0.518	0.266	0.323	0.071	0.192	**0.827**	**0.955**	**1.076**

NR Band	LTE Band	Exposure Position	LTE Standalone Maximum Power (dBm)	LTE Standalone 1g SAR (W/kg)	EN-DC Active LTE Maximum Power (dBm)	1 EN-DC Active Estimated LTE 1g SAR (W/kg)	2 NR 1g SAR (W/kg)	3 2.4GHz WLAN 1g SAR (W/kg)	4 5GHz WLAN 1g SAR (W/kg)	5 Bluetooth Chain 0 1g SAR (W/kg)	6 Bluetooth Chain 1 1g SAR (W/kg)	1+2+3 Summed 1g SAR (W/kg)	1+2+4+5 Summed 1g SAR (W/kg)	1+2+4+6 Summed 1g SAR (W/kg)
n41_UAT	LTE Band 66_LAT	Right Cheek	23.8	0.272	23.80	0.272	0.694	0.087	0.140	0.033	0.063	**1.053**	**1.139**	**1.169**
		Right Tilted	23.8	0.141	23.80	0.141	0.750	0.083	0.186	0.021	0.059	**0.974**	**1.098**	**1.136**
		Left Cheek	23.8	0.228	23.80	0.228	0.410	0.309	0.259	0.276	0.222	**0.947**	**1.173**	**1.119**
		Left Tilted	23.8	0.099	23.80	0.099	0.518	0.266	0.323	0.071	0.192	**0.883**	**1.011**	**1.132**
n41_UAT	LTE Band 2/25_LAT	Right Cheek	23.8	0.355	23.80	0.355	0.694	0.087	0.140	0.033	0.063	**1.136**	**1.222**	**1.252**
		Right Tilted	23.8	0.184	23.80	0.184	0.750	0.083	0.186	0.021	0.059	**1.017**	**1.141**	**1.179**
		Left Cheek	23.8	0.178	23.80	0.178	0.410	0.309	0.259	0.276	0.222	**0.897**	**1.123**	**1.069**
		Left Tilted	23.8	0.137	23.80	0.137	0.518	0.266	0.323	0.071	0.192	**0.921**	**1.049**	**1.170**

NR Band	LTE Band	Exposure Position	LTE Standalone Maximum Power (dBm)	LTE Standalone 1g SAR (W/kg)	EN-DC Active LTE Maximum Power (dBm)	1 EN-DC Active Estimated LTE 1g SAR (W/kg)	2 NR 1g SAR (W/kg)	3 2.4GHz WLAN 1g SAR (W/kg)	4 5GHz WLAN 1g SAR (W/kg)	5 Bluetooth Chain 0 1g SAR (W/kg)	6 Bluetooth Chain 1 1g SAR (W/kg)	1+2+3 Summed 1g SAR (W/kg)	1+2+4+5 Summed 1g SAR (W/kg)	1+2+4+6 Summed 1g SAR (W/kg)
n41_UAT	LTE Band 41(HPUE)_LAT	Right Cheek	23.8	0.155	23.80	0.155	0.694	0.087	0.140	0.033	0.063	**0.936**	**1.022**	**1.052**
		Right Tilted	23.8	0.115	23.80	0.115	0.750	0.083	0.186	0.021	0.059	**0.948**	**1.072**	**1.110**
		Left Cheek	23.8	0.260	23.80	0.260	0.410	0.309	0.259	0.276	0.222	**0.979**	**1.205**	**1.151**
		Left Tilted	23.8	0.076	23.80	0.076	0.518	0.266	0.323	0.071	0.192	**0.860**	**0.988**	**1.109**

<Hotspot exposure condition>

NR Band	LTE Band	Exposure Position	LTE Standalone Maximum Power (dBm)	LTE Standalone 1g SAR (W/kg)	EN-DC Active LTE Maximum Power (dBm)	1 EN-DC Active Estimated LTE 1g SAR (W/kg)	2 NR 1g SAR (W/kg)	3 2.4GHz WLAN 1g SAR (W/kg)	4 5GHz WLAN 1g SAR (W/kg)	5 Bluetooth Chain 0 1g SAR (W/kg)	6 Bluetooth Chain 1 1g SAR (W/kg)	1+2+3 Summed 1g SAR (W/kg)	1+2+4+5 Summed 1g SAR (W/kg)	1+2+4+6 Summed 1g SAR (W/kg)
n2_UAT	LTE Band 12_UAT	Front	23.80	0.621	18.00	0.163	0.357	0.061	0.002	0.048	0.041	**0.582**	**0.571**	**0.564**
		Back	23.80	0.641	18.00	0.169	0.403	0.314	0.343	0.197	0.190	**0.885**	**1.111**	**1.104**
		Left side	23.80	0.890	18.00	0.234	0.062					**0.296**	**0.296**	**0.296**
		Right side	23.80	0.048	18.00	0.013	0.043	0.120	0.420	0.127	0.133	**0.175**	**0.602**	**0.608**
		Top side	23.80	0.012	18.00	0.003	0.650	0.081	0.068	0.309	0.054	**0.734**	**1.030**	**0.775**
		Bottom side	23.80		18.00							**0.000**	**0.000**	**0.000**
n2_UAT	LTE Band 5_UAT	Front	22.80	0.619	17.50	0.183	0.357	0.061	0.002	0.048	0.041	**0.601**	**0.590**	**0.583**
		Back	22.80	0.617	17.50	0.182	0.403	0.314	0.343	0.197	0.190	**0.899**	**1.125**	**1.118**
		Left side	22.80	0.882	17.50	0.260	0.062					**0.322**	**0.322**	**0.322**
		Right side	22.80	0.020	17.50	0.006	0.043	0.120	0.420	0.127	0.133	**0.168**	**0.595**	**0.601**
		Top side	22.80	0.014	17.50	0.004	0.650	0.081	0.068	0.309	0.054	**0.735**	**1.031**	**0.776**
		Bottom side	22.80		17.50							**0.000**	**0.000**	**0.000**

NR Band	LTE Band	Exposure Position	LTE Standalone Maximum Power (dBm)	LTE Standalone 1g SAR (W/kg)	EN-DC Active LTE Maximum Power (dBm)	1 EN-DC Active Estimated LTE 1g SAR (W/kg)	2 NR 1g SAR (W/kg)	3 2.4GHz WLAN 1g SAR (W/kg)	4 5GHz WLAN 1g SAR (W/kg)	5 Bluetooth Chain 0 1g SAR (W/kg)	6 Bluetooth Chain 1 1g SAR (W/kg)	1+2+3 Summed 1g SAR (W/kg)	1+2+4+5 Summed 1g SAR (W/kg)	1+2+4+6 Summed 1g SAR (W/kg)
n5_UAT	LTE Band 2/25_UAT	Front	16.50	0.388	16.50	0.388	0.134	0.061	0.002	0.048	0.041	**0.583**	**0.572**	**0.565**
		Back	16.50	0.466	16.50	0.466	0.175	0.314	0.343	0.197	0.190	**0.955**	**1.181**	**1.174**
		Left side	16.50	0.096	16.50	0.096	0.285					**0.381**	**0.381**	**0.381**
		Right side	16.50	0.001	16.50	0.001	0.003	0.120	0.420	0.127	0.133	**0.124**	**0.551**	**0.557**
		Top side	16.50	0.653	16.50	0.653	0.003	0.081	0.068	0.309	0.054	**0.737**	**1.033**	**0.778**
		Bottom side	16.50		16.50							**0.000**	**0.000**	**0.000**
n5_UAT	LTE Band 66_UAT	Front	22.00	0.515	20.50	0.365	0.134	0.061	0.002	0.048	0.041	**0.560**	**0.549**	**0.542**
		Back	22.00	0.555	20.50	0.393	0.175	0.314	0.343	0.197	0.190	**0.882**	**1.108**	**1.101**
		Left side	22.00	0.163	20.50	0.115	0.285					**0.401**	**0.401**	**0.401**
		Right side	22.00	0.001	20.50	0.001	0.003	0.120	0.420	0.127	0.133	**0.123**	**0.550**	**0.556**
		Top side	22.00	0.918	20.50	0.650	0.003	0.081	0.068	0.309	0.054	**0.733**	**1.029**	**0.774**
		Bottom side	22.00		20.50							**0.000**	**0.000**	**0.000**

NR Band	LTE Band	Exposure Position	LTE Standalone Maximum Power (dBm)	LTE Standalone 1g SAR (W/kg)	EN-DC Active LTE Maximum Power (dBm)	1 EN-DC Active Estimated LTE 1g SAR (W/kg)	2 NR 1g SAR (W/kg)	3 2.4GHz WLAN 1g SAR (W/kg)	4 5GHz WLAN 1g SAR (W/kg)	5 Bluetooth Chain 0 1g SAR (W/kg)	6 Bluetooth Chain 1 1g SAR (W/kg)	1+2+3 Summed 1g SAR (W/kg)	1+2+4+5 Summed 1g SAR (W/kg)	1+2+4+6 Summed 1g SAR (W/kg)
n66_UAT	LTE Band 13_UAT	Front	22.30	0.472	18.00	0.175	0.413	0.061	0.002	0.048	0.041	**0.650**	**0.639**	**0.632**
		Back	22.30	0.519	18.00	0.193	0.395	0.314	0.343	0.197	0.190	**0.902**	**1.128**	**1.121**
		Left side	22.30	0.764	18.00	0.284	0.143					**0.427**	**0.427**	**0.427**
		Right side	22.30	0.031	18.00	0.012	0.023	0.120	0.420	0.127	0.133	**0.155**	**0.582**	**0.588**
		Top side	22.30	0.069	18.00	0.026	0.639	0.081	0.068	0.309	0.054	**0.746**	**1.042**	**0.787**
		Bottom side	22.30		18.00							**0.000**	**0.000**	**0.000**
n66_UAT	LTE Band 5_UAT	Front	22.80	0.619	17.50	0.183	0.413	0.061	0.002	0.048	0.041	**0.657**	**0.646**	**0.639**
		Back	22.80	0.617	17.50	0.182	0.395	0.314	0.343	0.197	0.190	**0.891**	**1.117**	**1.110**
		Left side	22.80	0.882	17.50	0.260	0.143					**0.404**	**0.404**	**0.404**
		Right side	22.80	0.020	17.50	0.006	0.023	0.120	0.420	0.127	0.133	**0.149**	**0.576**	**0.582**
		Top side	22.80	0.014	17.50	0.004	0.639	0.081	0.068	0.309	0.054	**0.724**	**1.020**	**0.765**
		Bottom side	22.80		17.50							**0.000**	**0.000**	**0.000**
n66_UAT	LTE Band 12_UAT	Front	23.80	0.621	18.00	0.163	0.413	0.061	0.002	0.048	0.041	**0.638**	**0.627**	**0.620**
		Back	23.80	0.641	18.00	0.169	0.395	0.314	0.343	0.197	0.190	**0.878**	**1.104**	**1.097**
		Left side	23.80	0.890	18.00	0.234	0.143					**0.377**	**0.377**	**0.377**
		Right side	23.80	0.048	18.00	0.013	0.023	0.120	0.420	0.127	0.133	**0.156**	**0.583**	**0.589**
		Top side	23.80	0.012	18.00	0.003	0.639	0.081	0.068	0.309	0.054	**0.723**	**1.019**	**0.764**
		Bottom side	23.80		18.00							**0.000**	**0.000**	**0.000**

NR Band	LTE Band	Exposure Position	LTE Standalone Maximum Power (dBm)	LTE Standalone 1g SAR (W/kg)	EN-DC Active LTE Maximum Power (dBm)	1 EN-DC Active Estimated LTE 1g SAR (W/kg)	2 NR 1g SAR (W/kg)	3 2.4GHz WLAN 1g SAR (W/kg)	4 5GHz WLAN 1g SAR (W/kg)	5 Bluetooth Chain 0 1g SAR (W/kg)	6 Bluetooth Chain 1 1g SAR (W/kg)	1+2+3 Summed 1g SAR (W/kg)	1+2+4+5 Summed 1g SAR (W/kg)	1+2+4+6 Summed 1g SAR (W/kg)
n71_UAT	LTE Band 2/25_UAT	Front	16.50	0.388	16.50	0.388	0.149	0.061	0.002	0.048	0.041	**0.598**	**0.587**	**0.580**
		Back	16.50	0.466	16.50	0.466	0.185	0.314	0.343	0.197	0.190	**0.965**	**1.191**	**1.184**
		Left side	16.50	0.096	16.50	0.096	0.227					**0.323**	**0.323**	**0.323**
		Right side	16.50	0.001	16.50	0.001	0.016	0.120	0.420	0.127	0.133	**0.137**	**0.564**	**0.570**
		Top side	16.50	0.653	16.50	0.653	0.003	0.081	0.068	0.309	0.054	**0.737**	**1.033**	**0.778**
		Bottom side	16.50		16.50							**0.000**	**0.000**	**0.000**
n71_UAT	LTE Band 66_UAT	Front	22.00	0.515	20.50	0.365	0.149	0.061	0.002	0.048	0.041	**0.575**	**0.564**	**0.557**
		Back	22.00	0.555	20.50	0.393	0.185	0.314	0.343	0.197	0.190	**0.892**	**1.118**	**1.111**
		Left side	22.00	0.163	20.50	0.115	0.227					**0.343**	**0.343**	**0.343**
		Right side	22.00	0.001	20.50	0.001	0.016	0.120	0.420	0.127	0.133	**0.137**	**0.564**	**0.570**
		Top side	22.00	0.918	20.50	0.650	0.003	0.081	0.068	0.309	0.054	**0.734**	**1.030**	**0.775**
		Bottom side	22.00		20.50							**0.000**	**0.000**	**0.000**

NR Band	LTE Band	Exposure Position	LTE Standalone Maximum Power (dBm)	LTE Standalone 1g SAR (W/kg)	EN-DC Active LTE Maximum Power (dBm)	1 EN-DC Active Estimated LTE 1g SAR (W/kg)	2 NR 1g SAR (W/kg)	3 2.4GHz WLAN 1g SAR (W/kg)	4 5GHz WLAN 1g SAR (W/kg)	5 Bluetooth Chain 0 1g SAR (W/kg)	6 Bluetooth Chain 1 1g SAR (W/kg)	1+2+3 Summed 1g SAR (W/kg)	1+2+4+5 Summed 1g SAR (W/kg)	1+2+4+6 Summed 1g SAR (W/kg)
n41 TX0_UAT	LTE Band 26_UAT	Front	22.30	0.466	20.00	0.274	0.262	0.061	0.002	0.048	0.041	**0.597**	**0.586**	**0.579**
		Back	22.30	0.501	20.00	0.295	0.340	0.314	0.343	0.197	0.190	**0.949**	**1.175**	**1.168**
		Left side	22.30	0.838	20.00	0.493	0.042					**0.535**	**0.535**	**0.535**
		Right side	22.30	0.020	20.00	0.012	0.024	0.120	0.420	0.127	0.133	**0.156**	**0.583**	**0.589**
		Top side	22.30	0.009	20.00	0.005	0.718	0.081	0.068	0.309	0.054	**0.804**	**1.100**	**0.845**
		Bottom side	22.30		20.00							**0.000**	**0.000**	**0.000**

NR Band	LTE Band	Exposure Position	LTE Standalone Maximum Power (dBm)	LTE Standalone 1g SAR (W/kg)	EN-DC Active LTE Maximum Power (dBm)	1 EN-DC Active LTE 1g SAR (W/kg)	2 NR 1g SAR (W/kg)	3 2.4GHz WLAN 1g SAR (W/kg)	4 5GHz WLAN 1g SAR (W/kg)	5 Bluetooth Chain 0 1g SAR (W/kg)	6 Bluetooth Chain 1 1g SAR (W/kg)	1+2+3 Summed 1g SAR (W/kg)	1+2+4+5 Summed 1g SAR (W/kg)	1+2+4+6 Summed 1g SAR (W/kg)
n41 TX1_UAT	LTE Band 2/25_LAT	Front	18.30	0.316	17.00	0.234	0.262	0.061	0.002	0.048	0.041	**0.557**	**0.546**	**0.539**
		Back	18.30	0.470	17.00	0.348	0.340	0.314	0.343	0.197	0.190	**1.003**	**1.229**	**1.222**
		Left side	18.30	0.054	17.00	0.040	0.042					**0.082**	**0.082**	**0.082**
		Right side	18.30	0.079	17.00	0.059	0.024	0.120	0.420	0.127	0.133	**0.202**	**0.629**	**0.635**
		Top side	18.30		17.00		0.718	0.081	0.068	0.309	0.054	**0.799**	**1.095**	**0.840**
		Bottom side	18.30	0.517	17.00	0.383						**0.383**	**0.383**	**0.383**
n41 TX1_UAT	LTE Band 66_LAT	Front	20.80	0.463	17.80	0.232	0.262	0.061	0.002	0.048	0.041	**0.555**	**0.544**	**0.537**
		Back	20.80	0.711	17.80	0.356	0.340	0.314	0.343	0.197	0.190	**1.011**	**1.237**	**1.230**
		Left side	20.80	0.171	17.80	0.086	0.042					**0.128**	**0.128**	**0.128**
		Right side	20.80	0.098	17.80	0.049	0.024	0.120	0.420	0.127	0.133	**0.193**	**0.620**	**0.626**
		Top side	20.80		17.80		0.718	0.081	0.068	0.309	0.054	**0.799**	**1.095**	**0.840**
		Bottom side	20.80	0.874	17.80	0.438						**0.438**	**0.438**	**0.438**

NR Band	LTE Band	Exposure Position	LTE Standalone Maximum Power (dBm)	LTE Standalone 1g SAR (W/kg)	EN-DC Active LTE Maximum Power (dBm)	1 EN-DC Active Estimated LTE 1g SAR (W/kg)	2 NR 1g SAR (W/kg)	3 2.4GHz WLAN 1g SAR (W/kg)	4 5GHz WLAN 1g SAR (W/kg)	5 Bluetooth Chain 0 1g SAR (W/kg)	6 Bluetooth Chain 1 1g SAR (W/kg)	1+2+3 Summed 1g SAR (W/kg)	1+2+4+5 Summed 1g SAR (W/kg)	1+2+4+6 Summed 1g SAR (W/kg)
n41 TX1_UAT	LTE Band 41_HPUE_LAT	Front	23.30	0.395	19.00	0.147	0.262	0.061	0.002	0.048	0.041	**0.470**	**0.459**	**0.452**
		Back	23.30	0.713	19.00	0.265	0.340	0.314	0.343	0.197	0.190	**0.919**	**1.145**	**1.138**
		Left side	23.30	0.120	19.00	0.045	0.042					**0.087**	**0.087**	**0.087**
		Right side	23.30	0.118	19.00	0.044	0.024	0.120	0.420	0.127	0.133	**0.188**	**0.615**	**0.621**
		Top side	23.30		19.00		0.718	0.081	0.068	0.309	0.054	**0.799**	**1.095**	**0.840**
		Bottom side	23.30	0.397	19.00	0.147						**0.147**	**0.147**	**0.147**

<Body-worn exposure condition>

NR Band	LTE Band	Exposure Position	LTE Standalone Maximum Power (dBm)	LTE Standalone 1g SAR (W/kg)	EN-DC Active LTE Maximum Power (dBm)	1 EN-DC Active Estimated LTE 1g SAR (W/kg)	2 NR 1g SAR (W/kg)	3 2.4GHz WLAN 1g SAR (W/kg)	4 5GHz WLAN 1g SAR (W/kg)	5 Bluetooth Chain 0 1g SAR (W/kg)	6 Bluetooth Chain 1 1g SAR (W/kg)	1+2+3 Summed 1g SAR (W/kg)	1+2+4+5 Summed 1g SAR (W/kg)	1+2+4+6 Summed 1g SAR (W/kg)
n2_UAT	LTE Band 12_UAT	Front	23.80	0.345	23.80	0.345	0.325	0.054	0.063	0.008	0.011	**0.724**	**0.741**	**0.744**
		Back	23.80	0.384	23.80	0.384	0.330	0.352	0.455	0.067	0.076	**1.066**	**1.236**	**1.245**
n2_UAT	LTE Band 5_UAT	Front	23.80	0.309	22.80	0.245	0.325	0.054	0.063	0.008	0.011	**0.624**	**0.641**	**0.644**
		Back	23.80	0.379	22.80	0.301	0.330	0.352	0.455	0.067	0.076	**0.983**	**1.153**	**1.162**

NR Band	LTE Band	Exposure Position	LTE Standalone Maximum Power (dBm)	LTE Standalone 1g SAR (W/kg)	EN-DC Active LTE Maximum Power (dBm)	1 EN-DC Active Estimated LTE 1g SAR (W/kg)	2 NR 1g SAR (W/kg)	3 2.4GHz WLAN 1g SAR (W/kg)	4 5GHz WLAN 1g SAR (W/kg)	5 Bluetooth Chain 0 1g SAR (W/kg)	6 Bluetooth Chain 1 1g SAR (W/kg)	1+2+3 Summed 1g SAR (W/kg)	1+2+4+5 Summed 1g SAR (W/kg)	1+2+4+6 Summed 1g SAR (W/kg)
n5_UAT	LTE Band 2/25_UAT	Front	22.00	0.353	22.00	0.353	0.199	0.054	0.063	0.008	0.011	**0.606**	**0.623**	**0.626**
		Back	22.00	0.462	22.00	0.462	0.247	0.352	0.455	0.067	0.076	**1.061**	**1.231**	**1.240**
n5_UAT	LTE Band 66_UAT	Front	22.00	0.219	22.00	0.219	0.199	0.054	0.063	0.008	0.011	**0.472**	**0.489**	**0.492**
		Back	22.00	0.313	22.00	0.313	0.247	0.352	0.455	0.067	0.076	**0.912**	**1.082**	**1.091**

NR Band	LTE Band	Exposure Position	LTE Standalone Maximum Power (dBm)	LTE Standalone 1g SAR (W/kg)	EN-DC Active LTE Maximum Power (dBm)	1 EN-DC Active Estimated LTE 1g SAR (W/kg)	2 NR 1g SAR (W/kg)	3 2.4GHz WLAN 1g SAR (W/kg)	4 5GHz WLAN 1g SAR (W/kg)	5 Bluetooth Chain 0 1g SAR (W/kg)	6 Bluetooth Chain 1 1g SAR (W/kg)	1+2+3 Summed 1g SAR (W/kg)	1+2+4+5 Summed 1g SAR (W/kg)	1+2+4+6 Summed 1g SAR (W/kg)
n66_UAT	LTE Band 13_UAT	Front	23.80	0.353	22.80	0.280	0.301	0.054	0.063	0.008	0.011	**0.635**	**0.652**	**0.655**
		Back	23.80	0.408	22.80	0.324	0.381	0.352	0.455	0.067	0.076	**1.057**	**1.227**	**1.236**
n66_UAT	LTE Band 5_UAT	Front	23.80	0.309	22.80	0.245	0.301	0.054	0.063	0.008	0.011	**0.600**	**0.617**	**0.620**
		Back	23.80	0.379	22.80	0.301	0.381	0.352	0.455	0.067	0.076	**1.034**	**1.204**	**1.213**
n66_UAT	LTE Band 12_UAT	Front	23.80	0.345	23.80	0.345	0.301	0.054	0.063	0.008	0.011	**0.700**	**0.717**	**0.720**
		Back	23.80	0.384	23.80	0.384	0.381	0.352	0.455	0.067	0.076	**1.117**	**1.287**	**1.296**

NR Band	LTE Band	Exposure Position	LTE Standalone Maximum Power (dBm)	LTE Standalone 1g SAR (W/kg)	EN-DC Active LTE Maximum Power (dBm)	1 EN-DC Active Estimated LTE 1g SAR (W/kg)	2 NR 1g SAR (W/kg)	3 2.4GHz WLAN 1g SAR (W/kg)	4 5GHz WLAN 1g SAR (W/kg)	5 Bluetooth Chain 0 1g SAR (W/kg)	6 Bluetooth Chain 1 1g SAR (W/kg)	1+2+3 Summed 1g SAR (W/kg)	1+2+4+5 Summed 1g SAR (W/kg)	1+2+4+6 Summed 1g SAR (W/kg)
n71_UAT	LTE Band 2/25_UAT	Front	22.00	0.353	22.00	0.353	0.144	0.054	0.063	0.008	0.011	**0.551**	**0.568**	**0.571**
		Back	22.00	0.462	22.00	0.462	0.258	0.352	0.455	0.067	0.076	**1.072**	**1.242**	**1.251**
n71_UAT	LTE Band 66_UAT	Front	22.00	0.219	22.00	0.219	0.144	0.054	0.063	0.008	0.011	**0.417**	**0.434**	**0.437**
		Back	22.00	0.313	22.00	0.313	0.258	0.352	0.455	0.067	0.076	**0.923**	**1.093**	**1.102**

NR Band	LTE Band	Exposure Position	LTE Standalone Maximum Power (dBm)	LTE Standalone 1g SAR (W/kg)	EN-DC Active LTE Maximum Power (dBm)	1 EN-DC Active Estimated LTE 1g SAR (W/kg)	2 NR 1g SAR (W/kg)	3 2.4GHz WLAN 1g SAR (W/kg)	4 5GHz WLAN 1g SAR (W/kg)	5 Bluetooth Chain 0 1g SAR (W/kg)	6 Bluetooth Chain 1 1g SAR (W/kg)	1+2+3 Summed 1g SAR (W/kg)	1+2+4+5 Summed 1g SAR (W/kg)	1+2+4+6 Summed 1g SAR (W/kg)
n41 TX0_UAT	LTE Band 26_UAT	Front	23.80	0.340	22.80	0.270	0.289	0.054	0.063	0.008	0.011	**0.613**	**0.630**	**0.633**
		Back	23.80	0.424	22.80	0.337	0.359	0.352	0.455	0.067	0.076	**1.047**	**1.217**	**1.226**

NR Band	LTE Band	Exposure Position	LTE Standalone Maximum Power (dBm)	LTE Standalone 1g SAR (W/kg)	EN-DC Active LTE Maximum Power (dBm)	1 EN-DC Active Estimated LTE 1g SAR (W/kg)	2 NR 1g SAR (W/kg)	3 2.4GHz WLAN 1g SAR (W/kg)	4 5GHz WLAN 1g SAR (W/kg)	5 Bluetooth Chain 0 1g SAR (W/kg)	6 Bluetooth Chain 1 1g SAR (W/kg)	1+2+3 Summed 1g SAR (W/kg)	1+2+4+5 Summed 1g SAR (W/kg)	1+2+4+6 Summed 1g SAR (W/kg)
n41 TX1_UAT	LTE Band 2/25_LAT	Front	23.80	0.656	21.50	0.386	0.289	0.054	0.063	0.008	0.011	**0.729**	**0.746**	**0.749**
		Back	23.80	0.669	21.50	0.394	0.359	0.352	0.455	0.067	0.076	**1.104**	**1.274**	**1.283**
n41 TX1_UAT	LTE Band 66_LAT	Front	23.80	0.583	21.50	0.343	0.289	0.054	0.063	0.008	0.011	**0.686**	**0.703**	**0.706**
		Back	23.80	0.651	21.50	0.383	0.359	0.352	0.455	0.067	0.076	**1.094**	**1.264**	**1.273**

NR Band	LTE Band	Exposure Position	LTE Standalone Maximum Power (dBm)	LTE Standalone 1g SAR (W/kg)	EN-DC Active LTE Maximum Power (dBm)	1 EN-DC Active Estimated LTE 1g SAR (W/kg)	2 NR 1g SAR (W/kg)	3 2.4GHz WLAN 1g SAR (W/kg)	4 5GHz WLAN 1g SAR (W/kg)	5 Bluetooth Chain 0 1g SAR (W/kg)	6 Bluetooth Chain 1 1g SAR (W/kg)	1+2+3 Summed 1g SAR (W/kg)	1+2+4+5 Summed 1g SAR (W/kg)	1+2+4+6 Summed 1g SAR (W/kg)
n41 TX1_UAT	LTE Band 41_HPUE_LAT	Front	23.80	0.134	22.50	0.099	0.289	0.054	0.063	0.008	0.011	**0.442**	**0.459**	**0.462**
		Back	23.80	0.505	22.50	0.374	0.359	0.352	0.455	0.067	0.076	**1.085**	**1.255**	**1.264**

19. Supplemental tuner tests results

General Note:

1. This device implements aperture tuner (16 status) + impedance tuner (144 status) antenna tuning techniques in the WCDMA B5, CDMA BC0/10, LTE 5/12/13/17/26/71, 5G NR /n5/n71.
2. This device implements impedance tuner (144 status) antenna tuning techniques in the WCDMA B2/4, CDMA BC1, LTE 2/4/7/25/30/41/48/66, 5G NR n2/n41/n66.
3. SAR test proposal was measured according to the normally required SAR configurations with the tuner active and worst tune state (auto tune) was used for SAR testing and this design will provide the highest power at different user scenarios and would not influence to the antenna characteristics other than impedance matching.
4. The following test procedure was followed to demonstrate that the SAR results in this report represent the appropriate SAR test conditions. For bands with dynamic tuning implemented, SAR will be measured according to the required FCC SAR test procedures with the dynamic tuner active to allow the device to automatically tune to the antenna state for the respective RF exposure test configurations. Additional single point SAR time-sweep measurements will be evaluated for other tuner states to determine that the other tuner configurations would result in equivalent or lower SAR values.
5. To evaluate all of the tuner states, the 144 tuner states are divided evenly among band, mode and exposure combinations so that at least one single point SAR measurement is measured in each configuration. Single point time-sweep measurements will be performed at the peak SAR location determined by the zoom scan of the configuration with the highest reported SAR for each combination. The tuner state will be established remotely so that the device is not moved for the entire series of single point SAR for the tuner states in each combination. The SAR probe will remain stationary at the same position throughout the entire series of single point measurements for each combination.
6. The device supports LTE B5/B26, 2/B25, B4/B66, B12/17, B38/B41. Since the supported frequency span for LTE B5/B2/B4/B17/B38 falls completely within the supported frequency span for LTE B26/B25/B66/B12/B41, and both bands have the same target power and both LTE bands share the same transmission path, therefore standalone SAR was only assessed for LTE B26/B25/B66/B12/B41. The single point SAR time-sweep measurements were treated independently for each supported ACL frequency band. For the LTE B5/B2/B4/B17/B38 single point SAR measurement selected the highest measured SAR configuration and exposure condition of LTE B26/B25/B66/B12/B41.
7. According to TCBC 201904 workshop, total number tuner states divided evenly among each supported band / air interface and exposure condition combination.
8. According to TCBC 201904 workshop, if any single point SAR measurement result is > 1.2 W/kg for a band/exposure condition combination set, all supported tuner states are evaluated with single point SAR measurements for the combination
9. The tuner state was established remotely through Wi-Fi so that the device is not moved for the entire series of single point SAR for the tuner states in each combination (band, mode, exposure conditions).

RF exposure position						Aperture 00						Aperture 01					Aperture 02					Aperture 03				
						Average Value of Time Sweep (W/kg)						Average Value of Time Sweep (W/kg)					Average Value of Time Sweep (W/kg)					Average Value of Time Sweep (W/kg)				
WWAN UAT Head	Band	Mode	Channel	Test Position	Measured 1g SAR (W/kg)	Auto-Tune (State 1-8)	0	36	72	108	144	0	36	72	108	144	0	36	72	108	144	0	36	72	108	144
	UMTS B5	RMC12.2Kbps	4233	Left Cheek	0.521	0.738	0.212	0.307	0.546	0.212	0.403	0.422	0.06	0.107	0.05	0.317	0.203	0.488	0.079	0.536	0.536	0.412	0.603	0.688	0.393	0.069
	Band	Mode	Channel	Test Position	Measured 1g SAR (W/kg)	Auto-Tune (State 1-9)	1	37	73	109	0	1	37	73	109	0	1	37	73	109	0	1	37	73	109	0
	BC0	RC3+SO55	777	Left Cheek	0.487	0.673	0.585	0.519	0.042	0.281	0.585	0.09	0.138	0.461	0.547	0.595	0.138	0.49	0.138	0.461	0.214	0.281	0.233	0.642	0.404	0.385
	Band	Mode	Channel	Test Position	Measured 1g SAR (W/kg)	Auto-Tune (State 1-9)	2	38	74	110	1	2	38	74	110	1	2	38	74	110	1	2	38	74	110	1
	BC10	RC3+SO55	580	Left Cheek	0.515	0.745	0.581	0.381	0.467	0.333	0.229	0.438	0.524	0.295	0.4	0.41	0.714	0.238	0.448	0.657	0.391	0.324	0.343	0.495	0.686	0.638
	Band	Mode	Channel	Test Position	Measured 1g SAR (W/kg)	Auto-Tune (State 3-10)	3	39	75	111	2	3	39	75	111	2	3	39	75	111	2	3	39	75	111	2
	LTE B12	10M_QPSK_25_12	23095	Left Cheek	0.47	0.673	0.052	0.214	0.242	0.347	0.223	0.233	0.376	0.471	0.29	0.3	0.671	0.195	0.5	0.414	0.042	0.071	0.338	0.5	0.128	0.633
	Band	Mode	Channel	Test Position	Measured 1g SAR (W/kg)	Auto-Tune (State 9-10)	4	40	76	112	3	4	40	76	112	3	4	40	76	112	3	4	40	76	112	3
	LTE B13	10M_QPSK_1_0	23230	Left Cheek	0.554	0.763	0.209	0.056	0.085	0.485	0.209	0.323	0.351	0.075	0.637	0.723	0.647	0.38	0.228	0.351	0.656	0.218	0.628	0.399	0.723	0.485
	Band	Mode	Channel	Test Position	Measured 1g SAR (W/kg)	Auto-Tune (State 1-47)	5	41	77	113	4	5	41	77	113	4	5	41	77	113	4	5	41	77	113	4
	LTE B26	15M_QPSK_36_20	26965	Left Cheek	0.534	0.768	0.699	0.69	0.337	0.176	0.642	0.556	0.614	0.366	0.509	0.261	0.461	0.718	0.68	0.223	0.147	0.766	0.547	0.68	0.652	0.671
	Band	Mode	Channel	Test Position	Measured 1g SAR (W/kg)	Auto-Tune (State 3-11)	6	42	78	114	5	6	42	78	114	5	6	42	78	114	5	6	42	78	114	5
	LTE B71	10M_QPSK_50_24	133322	Left Cheek	0.505	0.693	0.148	0.196	0.529	0.262	0.329	0.196	0.348	0.624	0.139	0.215	0.205	0.548	0.091	0.32	0.32	0.386	0.091	0.643	0.186	0.548
	Band	Mode	Channel	Test Position	Measured 1g SAR (W/kg)	Auto-Tune (State 1-38)	7	43	79	115	6	7	43	79	115	6	7	43	79	115	6	7	43	79	115	6
	n5	20M_QPSK_1_1	167800	Left Cheek	0.057	0.062	0.022	0.031	0.05	0.003	0.022	0.06	0.022	0.05	0.031	0.031	0.041	0.003	0.06	0.003	0.06	0.06	0.003	0.031	0.003	0.003
	Band	Mode	Channel	Test Position	Measured 1g SAR (W/kg)	Auto-Tune (State 3-121)	8	44	80	116	7	8	44	80	116	7	8	44	80	116	7	8	44	80	116	7
	n71	20M_QPSK_50_0	136100	Left Cheek	0.058	0.063	0.004	0.013	0.013	0.032	0.004	0.051	0.004	0.013	0.013	0.032	0.004	0.051	0.013	0.032	0.061	0.013	0.061	0.013	0.004	0.032
WWAN LAT Head	Band	Mode	Channel	Test Position	Measured 1g SAR (W/kg)	Auto-Tune (State 1-116)	9	45	81	117	8	9	45	81	117	8	9	45	81	117	8	9	45	81	117	8
	UMTS B5	RMC12.2Kbps	4233	Left Cheek	0.154	0.173	0.076	0.104	0.047	0.019	0.047	0.171	0.123	0.009	0.066	0.152	0.057	0.161	0.142	0.038	0.142	0.095	0.152	0.142	0.076	0.114
	Band	Mode	Channel	Test Position	Measured 1g SAR (W/kg)	Auto-Tune (State 1-116)	10	46	82	118	9	10	46	82	118	9	10	46	82	118	9	10	46	82	118	9
	BC0	RC3+SO55	1013	Left Cheek	0.142	0.163	0.151	0.104	0.123	0.066	0.142	0.028	0.113	0.123	0.018	0.009	0.104	0.142	0.056	0.037	0.113	0.018	0.018	0.132	0.104	0.094
	Band	Mode	Channel	Test Position	Measured 1g SAR (W/kg)	Auto-Tune (State 1-116)	11	47	83	119	10	11	47	83	119	10	11	47	83	119	10	11	47	83	119	10
	BC10	RC3+SO55	684	Left Cheek	0.138	0.169	0.034	0.11	0.024	0.062	0.091	0.062	0.062	0.062	0.1	0.11	0.129	0.148	0.034	0.015	0.119	0.129	0.157	0.024	0.157	0.148
	Band	Mode	Channel	Test Position	Measured 1g SAR (W/kg)	Auto-Tune (State 0-107)	12	48	84	120	11	12	48	84	120	11	12	48	84	120	11	12	48	84	120	11
	LTE B12	10M_QPSK_1_0	23095	Left Cheek	0.169	0.185	0.135	0.107	0.116	0.107	0.145	0.078	0.078	0.031	0.031	0.021	0.069	0.183	0.031	0.069	0.135	0.135	0.164	0.183	0.05	0.05
	Band	Mode	Channel	Test Position	Measured 1g SAR (W/kg)	Auto-Tune (State 3-142)	13	49	85	121	12	13	49	85	121	12	13	49	85	121	12	13	49	85	121	12
	LTE B13	10M_QPSK_1_0	23230	Left Cheek	0.121	0.152	0.14	0.045	0.055	0.112	0.083	0.045	0.083	0.093	0.045	0.055	0.026	0.017	0.036	0.007	0.112	0.074	0.055	0.055	0.007	0.102
	Band	Mode	Channel	Test Position	Measured 1g SAR (W/kg)	Auto-Tune (State 1-35)	14	50	86	122	13	14	50	86	122	13	14	50	86	122	13	14	50	86	122	13
	LTE B26	15M_QPSK_1_0	26915	Left Cheek	0.163	0.178	0.176	0.081	0.128	0.157	0.024	0.128	0.052	0.09	0.062	0.071	0.024	0.024	0.052	0.014	0.062	0.052	0.024	0.1	0.119	0.081
	Band	Mode	Channel	Test Position	Measured 1g SAR (W/kg)	Auto-Tune (State 4-134)	15	51	87	123	14	15	51	87	123	14	15	51	87	123	14	15	51	87	123	14
	LTE B71	10M_QPSK_1_0	133322	Left Cheek	0.111	0.132	0.092	0.092	0.035	0.054	0.12	0.092	0.12	0.016	0.073	0.025	0.12	0.13	0.035	0.063	0.073	0.082	0.016	0.006	0.006	0.13
	Band	Mode	Channel	Test Position	Measured 1g SAR (W/kg)	Auto-Tune (State 2-35)	16	52	88	124	15	16	52	88	124	15	16	52	88	124	15	16	52	88	124	15
	n5	20M_QPSK_50_1	166800	Left Cheek	0.092	0.131	0.081	0.024	0.024	0.005	0.081	0.072	0.062	0.005	0.129	0.081	0.024	0.11	0.081	0.053	0.053	0.034	0.072	0.005	0.005	0.053
	Band	Mode	Channel	Test Position	Measured 1g SAR (W/kg)	Auto-Tune (State 4-88)	17	53	89	125	16	17	53	89	125	16	17	53	89	125	16	17	53	89	125	16
	n71	20M_QPSK_1_1	134600	Left Cheek	0.081	0.085	0.045	0.035	0.054	0.035	0.064	0.073	0.045	0.007	0.054	0.007	0.054	0.064	0.064	0.007	0.016	0.073	0.035	0.064	0.016	0.016
WWAN UAT Body	Band	Mode	Channel	Test Position	Measured 1g SAR (W/kg)	Auto-Tune (State 1-9)	18	54	90	126	17	18	54	90	126	17	18	54	90	126	17	18	54	90	126	17
	UMTS B5	RMC12.2Kbps	4182	Left Side	0.699	0.986	0.26	0.498	0.87	0.432	0.298	0.26	0.898	0.136	0.527	0.613	0.946	0.955	0.222	0.327	0.936	0.927	0.67	0.298	0.422	0.222
	Band	Mode	Channel	Test Position	Measured 1g SAR (W/kg)	Auto-Tune (State 1-9)	19	55	91	127	18	19	55	91	127	18	19	55	91	127	18	19	55	91	127	18
	BC0	RTAP 153.6Kbps	777	Left Side	0.543	0.758	0.261	0.604	0.651	0.451	0.508	0.746	0.727	0.746	0.108	0.223	0.613	0.299	0.232	0.651	0.623	0.661	0.175	0.642	0.356	0.556
	Band	Mode	Channel	Test Position	Measured 1g SAR (W/kg)	Auto-Tune (State 1-9)	20	56	92	128	19	20	56	92	128	19	20	56	92	128	19	20	56	92	128	19
	BC10	RTAP 153.6Kbps	476	Left Side	0.546	0.762	0.512	0.503	0.455	0.35	0.189	0.217	0.074	0.455	0.389	0.741	0.35	0.16	0.37	0.274	0.76	0.37	0.274	0.046	0.36	0.093
	Band	Mode	Channel	Test Position	Measured 1g SAR (W/kg)	Auto-Tune (State 3-10)	21	57	93	129	20	21	57	93	129	20	21	57	93	129	20	21	57	93	129	20
	LTE B12	10M_QPSK_1_25	23095	Left Side	0.737	0.982	0.44	0.068	0.716	0.354	0.135	0.325	0.573	0.306	0.459	0.621	0.24	0.402	0.04	0.049	0.44	0.649	0.545	0.421	0.497	0.735
	Band	Mode	Channel	Test Position	Measured 1g SAR (W/kg)	Auto-Tune (State 9-10)	22	58	94	130	21	22	58	94	130	21	22	58	94	130	21	22	58	94	130	21
	LTE B13	10M_QPSK_25_12	23230	Left Side	0.582	0.801	0.656	0.17	0.656	0.637	0.256	0.723	0.666	0.589	0.609	0.294	0.085	0.523	0.361	0.18	0.047	0.313	0.056	0.485	0.428	0.342
	Band	Mode	Channel	Test Position	Measured 1g SAR (W/kg)	Auto-Tune (State 1-47)	23	59	95	131	22	23	59	95	131	22	23	59	95	131	22	23	59	95	131	22

	LTE B26	15M_QPSK_36_20	26915	Left Side	0.655	0.911	0.366	0.757	0.652	0.061	0.261	0.29	0.442	0.471	0.795	0.185	0.804	0.766	0.328	0.442	0.233	0.766	0.319	0.623	0.89	0.557
	Band	Mode	Channel	Test Position	Measured 1g SAR (W/kg)	Auto-Tune (State 3-11)	24	60	96	132	23	24	60	96	132	23	24	60	96	132	23	24	60	96	132	23
	LTE B71	10M_QPSK_1_0	133322	Left Side	0.633	0.833	0.564	0.202	0.136	0.536	0.298	0.421	0.793	0.355	0.345	0.745	0.641	0.174	0.412	0.117	0.383	0.421	0.612	0.364	0.507	0.298
	Band	Mode	Channel	Test Position	Measured 1g SAR (W/kg)	Auto-Tune (State 0-135)	25	61	97	133	24	25	61	97	133	24	25	61	97	133	24	25	61	97	133	24
	n5	20M_QPSK_1_1	167800	Left Side	0.11	0.128	0.069	0.021	0.012	0.088	0.04	0.05	0.078	0.088	0.116	0.116	0.078	0.069	0.05	0.021	0.059	0.126	0.04	0.069	0.031	0.126
	Band	Mode	Channel	Test Position	Measured 1g SAR (W/kg)	Auto-Tune (State 2-96)	26	62	98	134	25	26	62	98	134	25	26	62	98	134	25	26	62	98	134	25
	n71	20M_QPSK_1_1	134600	Left Side	0.086	0.102	0.033	0.033	0.081	0.014	0.071	0.081	0.09	0.071	0.062	0.052	0.043	0.071	0.005	0.033	0.052	0.081	0.071	0.043	0.081	0.09
WWAN LAT Body	Band	Mode	Channel	Test Position	Measured 1g SAR (W/kg)	Auto-Tune (State 1-116)	27	63	99	135	26	27	63	99	135	26	27	63	99	135	26	27	63	99	135	26
	UMTS B5	RMC12.2Kbps	4132	Back	0.432	0.463	0.309	0.318	0.08	0.404	0.432	0.175	0.318	0.128	0.451	0.328	0.128	0.051	0.28	0.032	0.299	0.442	0.404	0.194	0.204	0.299
	Band	Mode	Channel	Test Position	Measured 1g SAR (W/kg)	Auto-Tune (State 1-116)	28	64	100	136	27	28	64	100	136	27	28	64	100	136	27	28	64	100	136	27
	BC0	RTAP 153.6Kbps	1013	Back	0.416	0.472	0.175	0.26	0.08	0.127	0.222	0.299	0.146	0.07	0.184	0.041	0.032	0.403	0.241	0.289	0.365	0.194	0.441	0.308	0.327	0.28
	Band	Mode	Channel	Test Position	Measured 1g SAR (W/kg)	Auto-Tune (State 1-116)	29	65	101	137	28	29	65	101	137	28	29	65	101	137	28	29	65	101	137	28
	BC10	RTAP 153.6Kbps	684	Back	0.412	0.469	0.219	0.229	0.238	0.124	0.296	0.067	0.305	0.086	0.238	0.105	0.238	0.038	0.219	0.248	0.41	0.381	0.381	0.229	0.115	0.238
	Band	Mode	Channel	Test Position	Measured 1g SAR (W/kg)	Auto-Tune (State 0-107)	30	66	102	138	29	30	66	102	138	29	30	66	102	138	29	30	66	102	138	29
	LTE B12	10M_QPSK_1_25	23095	Back	0.462	0.511	0.385	0.299	0.28	0.347	0.166	0.319	0.233	0.109	0.49	0.452	0.052	0.376	0.204	0.147	0.166	0.204	0.347	0.119	0.166	0.176
	Band	Mode	Channel	Test Position	Measured 1g SAR (W/kg)	Auto-Tune (State 3-142)	31	67	103	139	30	31	67	103	139	30	31	67	103	139	30	31	67	103	139	30
	LTE B13	10M_QPSK_25_12	23230	Back	0.324	0.376	0.374	0.088	0.25	0.25	0.364	0.126	0.136	0.174	0.107	0.288	0.317	0.25	0.336	0.241	0.241	0.184	0.336	0.288	0.184	0.022
	Band	Mode	Channel	Test Position	Measured 1g SAR (W/kg)	Auto-Tune (State 1-35)	32	68	104	140	31	32	68	104	140	31	32	68	104	140	31	32	68	104	140	31
	LTE B26	15M_QPSK_1_0	26765	Back	0.442	0.483	0.214	0.471	0.11	0.129	0.129	0.376	0.481	0.033	0.31	0.291	0.31	0.271	0.462	0.367	0.291	0.138	0.386	0.262	0.052	0.138
	Band	Mode	Channel	Test Position	Measured 1g SAR (W/kg)	Auto-Tune (State 4-134)	33	69	105	141	32	33	69	105	141	32	33	69	105	141	32	33	69	105	141	32
	LTE B71	10M_QPSK_50_24	133322	Back	0.385	0.446	0.12	0.187	0.425	0.082	0.187	0.177	0.206	0.187	0.273	0.311	0.406	0.034	0.425	0.073	0.13	0.025	0.311	0.301	0.254	0.434
	Band	Mode	Channel	Test Position	Measured 1g SAR (W/kg)	Auto-Tune (State 1-68)	34	70	106	142	33	34	70	106	142	33	34	70	106	142	33	34	70	106	142	33
	n5	20M_QPSK_1_1	167800	Back	0.068	0.072	0.032	0.032	0.051	0.07	0.051	0.051	0.07	0.022	0.032	0.051	0.051	0.003	0.032	0.022	0.07	0.032	0.032	0.06	0.032	0.06
	Band	Mode	Channel	Test Position	Measured 1g SAR (W/kg)	Auto-Tune (State 4-105)	35	71	107	143	34	35	71	107	143	34	35	71	107	143	34	35	71	107	143	34
	n71	20M_QPSK_1_1	134600	Back	0.054	0.061	0.011	0.059	0.021	0.03	0.049	0.002	0.03	0.021	0.04	0.049	0.011	0.049	0.04	0.011	0.002	0.059	0.011	0.059	0.03	0.03

RF exposure position						Aperture 04					Aperture 05					Aperture 06					Aperture 07				
						Average Value of Time Sweep (W/kg)					Average Value of Time Sweep (W/kg)					Average Value of Time Sweep (W/kg)					Average Value of Time Sweep (W/kg)				
WWAN UAT Head	Band	Mode	Channel	Test Position	Measured 1g SAR (W/kg)	0	36	72	108	144	0	36	72	108	144	0	36	72	108	144	0	36	72	108	144
	UMTS B5	RMC12.2Kbps	4233	Left Cheek	0.521	0.069	0.688	0.488	0.117	0.603	0.488	0.346	0.622	0.269	0.041	0.736	0.726	0.126	0.45	0.25	0.107	0.469	0.679	0.231	0.498
	Band	Mode	Channel	Test Position	Measured 1g SAR (W/kg)	1	37	73	109	0	1	37	73	109	0	1	37	73	109	0	1	37	73	109	0
	BC0	RC3+SO55	777	Left Cheek	0.487	0.585	0.633	0.157	0.442	0.452	0.071	0.157	0.042	0.442	0.281	0.414	0.157	0.185	0.595	0.271	0.671	0.042	0.585	0.3	0.147
	Band	Mode	Channel	Test Position	Measured 1g SAR (W/kg)	2	38	74	110	1	2	38	74	110	1	2	38	74	110	1	2	38	74	110	1
	BC10	RC3+SO55	580	Left Cheek	0.515	0.543	0.429	0.562	0.172	0.562	0.143	0.086	0.505	0.514	0.533	0.143	0.048	0.714	0.333	0.505	0.076	0.657	0.705	0.61	0.343
	Band	Mode	Channel	Test Position	Measured 1g SAR (W/kg)	3	39	75	111	2	3	39	75	111	2	3	39	75	111	2	3	39	75	111	2
	LTE B12	10M_QPSK_25_12	23095	Left Cheek	0.47	0.081	0.376	0.5	0.395	0.223	0.614	0.642	0.242	0.671	0.147	0.119	0.233	0.328	0.414	0.385	0.49	0.138	0.338	0.376	0.052
	Band	Mode	Channel	Test Position	Measured 1g SAR (W/kg)	4	40	76	112	3	4	40	76	112	3	4	40	76	112	3	4	40	76	112	3
	LTE B13	10M_QPSK_1_0	23230	Left Cheek	0.554	0.047	0.285	0.542	0.294	0.161	0.209	0.428	0.266	0.523	0.485	0.256	0.38	0.409	0.399	0.523	0.437	0.523	0.218	0.132	0.542
	Band	Mode	Channel	Test Position	Measured 1g SAR (W/kg)	5	41	77	113	4	5	41	77	113	4	5	41	77	113	4	5	41	77	113	4
	LTE B26	15M_QPSK_36_20	26965	Left Cheek	0.534	0.261	0.452	0.528	0.166	0.68	0.414	0.442	0.147	0.423	0.604	0.261	0.328	0.261	0.633	0.271	0.347	0.414	0.356	0.69	0.147
	Band	Mode	Channel	Test Position	Measured 1g SAR (W/kg)	6	42	78	114	5	6	42	78	114	5	6	42	78	114	5	6	42	78	114	5
	LTE B71	10M_QPSK_50_24	133322	Left Cheek	0.505	0.358	0.672	0.672	0.586	0.539	0.586	0.443	0.129	0.072	0.691	0.491	0.348	0.52	0.415	0.491	0.12	0.072	0.272	0.253	0.281
	Band	Mode	Channel	Test Position	Measured 1g SAR (W/kg)	7	43	79	115	6	7	43	79	115	6	7	43	79	115	6	7	43	79	115	6
	n5	20M_QPSK_1_1	167800	Left Cheek	0.057	0.06	0.022	0.022	0.022	0.05	0.003	0.05	0.022	0.022	0.022	0.05	0.06	0.022	0.041	0.06	0.031	0.022	0.031	0.05	0.022
	Band	Mode	Channel	Test Position	Measured 1g SAR (W/kg)	8	44	80	116	7	8	44	80	116	7	8	44	80	116	7	8	44	80	116	7
	n71	20M_QPSK_50_0	136100	Left Cheek	0.058	0.023	0.023	0.013	0.023	0.013	0.013	0.013	0.004	0.032	0.032	0.032	0.004	0.061	0.004	0.061	0.051	0.061	0.051	0.042	0.042
WWAN LAT Head	Band	Mode	Channel	Test Position	Measured 1g SAR (W/kg)	9	45	81	117	8	9	45	81	117	8	9	45	81	117	8	9	45	81	117	8
	UMTS B5	RMC12.2Kbps	4233	Left Cheek	0.154	0.133	0.104	0.161	0.038	0.076	0.057	0.104	0.133	0.161	0.057	0.047	0.161	0.114	0.171	0.114	0.066	0.085	0.038	0.123	0.095
	Band	Mode	Channel	Test Position	Measured 1g SAR (W/kg)	10	46	82	118	9	10	46	82	118	9	10	46	82	118	9	10	46	82	118	9
	BC0	RC3+SO55	1013	Left Cheek	0.142	0.123	0.009	0.094	0.056	0.113	0.066	0.075	0.123	0.132	0.132	0.009	0.142	0.161	0.009	0.142	0.132	0.009	0.009	0.037	0.075
	Band	Mode	Channel	Test Position	Measured 1g SAR (W/kg)	11	47	83	119	10	11	47	83	119	10	11	47	83	119	10	11	47	83	119	10
	BC10	RC3+SO55	684	Left Cheek	0.138	0.138	0.148	0.167	0.148	0.072	0.015	0.1	0.119	0.034	0.034	0.034	0.062	0.11	0.11	0.024	0.015	0.043	0.148	0.167	0.024
	Band	Mode	Channel	Test Position	Measured 1g SAR (W/kg)	12	48	84	120	11	12	48	84	120	11	12	48	84	120	11	12	48	84	120	11
	LTE B12	10M_QPSK_1_0	23095	Left Cheek	0.169	0.135	0.05	0.173	0.078	0.04	0.088	0.145	0.078	0.031	0.173	0.078	0.031	0.021	0.107	0.078	0.126	0.059	0.183	0.164	0.097
	Band	Mode	Channel	Test Position	Measured 1g SAR (W/kg)	13	49	85	121	12	13	49	85	121	12	13	49	85	121	12	13	49	85	121	12
	LTE B13	10M_QPSK_1_0	23230	Left Cheek	0.121	0.064	0.121	0.121	0.045	0.083	0.14	0.017	0.036	0.121	0.112	0.045	0.102	0.017	0.14	0.064	0.017	0.017	0.074	0.036	0.131
	Band	Mode	Channel	Test Position	Measured 1g SAR (W/kg)	14	50	86	122	13	14	50	86	122	13	14	50	86	122	13	14	50	86	122	13
	LTE B26	15M_QPSK_1_0	26915	Left Cheek	0.163	0.166	0.09	0.119	0.052	0.128	0.024	0.176	0.081	0.157	0.109	0.043	0.062	0.09	0.138	0.062	0.052	0.128	0.109	0.043	0.119
	Band	Mode	Channel	Test Position	Measured 1g SAR (W/kg)	15	51	87	123	14	15	51	87	123	14	15	51	87	123	14	15	51	87	123	14
	LTE B71	10M_QPSK_1_0	133322	Left Cheek	0.111	0.035	0.13	0.025	0.025	0.054	0.016	0.13	0.044	0.063	0.092	0.006	0.073	0.054	0.082	0.12	0.063	0.016	0.092	0.111	0.092
	Band	Mode	Channel	Test Position	Measured 1g SAR (W/kg)	16	52	88	124	15	16	52	88	124	15	16	52	88	124	15	16	52	88	124	15
	n5	20M_QPSK_50_1	166800	Left Cheek	0.092	0.015	0.072	0.062	0.11	0.015	0.129	0.053	0.034	0.034	0.091	0.034	0.024	0.043	0.072	0.119	0.129	0.072	0.005	0.015	0.11
	Band	Mode	Channel	Test Position	Measured 1g SAR (W/kg)	17	53	89	125	16	17	53	89	125	16	17	53	89	125	16	17	53	89	125	16
	n71	20M_QPSK_1_1	134600	Left Cheek	0.081	0.016	0.035	0.026	0.073	0.016	0.016	0.026	0.073	0.016	0.007	0.007	0.016	0.073	0.035	0.026	0.083	0.073	0.016	0.035	0.007
WWAN UAT Body	Band	Mode	Channel	Test Position	Measured 1g SAR (W/kg)	18	54	90	126	17	18	54	90	126	17	18	54	90	126	17	18	54	90	126	17
	UMTS B5	RMC12.2Kbps	4182	Left Side	0.699	0.603	0.403	0.632	0.394	0.441	0.974	0.536	0.165	0.603	0.984	0.098	0.174	0.06	0.146	0.079	0.917	0.508	0.689	0.222	0.327
	Band	Mode	Channel	Test Position	Measured 1g SAR (W/kg)	19	55	91	127	18	19	55	91	127	18	19	55	91	127	18	19	55	91	127	18
	BC0	RTAP 153.6Kbps	777	Left Side	0.543	0.318	0.337	0.651	0.232	0.413	0.413	0.156	0.089	0.308	0.118	0.527	0.175	0.099	0.594	0.632	0.575	0.223	0.756	0.089	0.546
	Band	Mode	Channel	Test Position	Measured 1g SAR (W/kg)	20	56	92	128	19	20	56	92	128	19	20	56	92	128	19	20	56	92	128	19
	BC10	RTAP 153.6Kbps	476	Left Side	0.546	0.531	0.512	0.322	0.646	0.417	0.131	0.217	0.103	0.465	0.046	0.598	0.484	0.074	0.131	0.712	0.265	0.093	0.122	0.589	0.189
	Band	Mode	Channel	Test Position	Measured 1g SAR (W/kg)	21	57	93	129	20	21	57	93	129	20	21	57	93	129	20	21	57	93	129	20
	LTE B12	10M_QPSK_1_25	23095	Left Side	0.737	0.43	0.211	0.097	0.106	0.297	0.44	0.668	0.535	0.268	0.287	0.668	0.316	0.487	0.278	0.506	0.173	0.564	0.535	0.059	0.211
	Band	Mode	Channel	Test Position	Measured 1g SAR (W/kg)	22	58	94	130	21	22	58	94	130	21	22	58	94	130	21	22	58	94	130	21
	LTE B13	10M_QPSK_25_12	23230	Left Side	0.582	0.123	0.085	0.789	0.342	0.466	0.723	0.285	0.513	0.342	0.475	0.399	0.447	0.742	0.18	0.732	0.618	0.78	0.599	0.142	0.304
	Band	Mode	Channel	Test Position	Measured 1g SAR (W/kg)	23	59	95	131	22	23	59	95	131	22	23	59	95	131	22	23	59	95	131	22
	LTE B26	15M_QPSK_36_20	26915	Left Side	0.655	0.433	0.28	0.404	0.633	0.852	0.176	0.509	0.852	0.709	0.357	0.557	0.757	0.747	0.509	0.176	0.633	0.576	0.614	0.328	0.547
	Band	Mode	Channel	Test	Measured	24	60	96	132	23	24	60	96	132	23	24	60	96	132	23	24	60	96	132	23

				Position	1g SAR (W/kg)																				
	LTE B71	10M_QPSK_1_0	133322	Left Side	0.633	0.174	0.298	0.745	0.317	0.393	0.574	0.041	0.507	0.355	0.402	0.431	0.821	0.802	0.812	0.345	0.298	0.183	0.755	0.45	0.545
	Band	Mode	Channel	Test Position	Measured 1g SAR (W/kg)	25	61	97	133	24	25	61	97	133	24	25	61	97	133	24	25	61	97	133	24
	n5	20M_QPSK_1_1	167800	Left Side	0.11	0.04	0.031	0.059	0.059	0.126	0.021	0.107	0.107	0.078	0.116	0.078	0.097	0.04	0.088	0.012	0.021	0.04	0.069	0.012	0.059
	Band	Mode	Channel	Test Position	Measured 1g SAR (W/kg)	26	62	98	134	25	26	62	98	134	25	26	62	98	134	25	26	62	98	134	25
	n71	20M_QPSK_1_1	134600	Left Side	0.086	0.033	0.005	0.033	0.005	0.033	0.081	0.014	0.081	0.1	0.014	0.043	0.033	0.014	0.024	0.014	0.1	0.043	0.005	0.062	0.005
WWAN LAT Body	Band	Mode	Channel	Test Position	Measured 1g SAR (W/kg)	27	63	99	135	26	27	63	99	135	26	27	63	99	135	26	27	63	99	135	26
	UMTS B5	RMC12.2Kbps	4132	Back	0.432	0.223	0.461	0.175	0.128	0.213	0.242	0.375	0.147	0.309	0.175	0.051	0.251	0.299	0.347	0.261	0.356	0.166	0.023	0.394	0.251
	Band	Mode	Channel	Test Position	Measured 1g SAR (W/kg)	28	64	100	136	27	28	64	100	136	27	28	64	100	136	27	28	64	100	136	27
	BC0	RTAP 153.6Kbps	1013	Back	0.416	0.251	0.175	0.118	0.299	0.365	0.451	0.318	0.118	0.356	0.032	0.222	0.156	0.47	0.413	0.422	0.241	0.375	0.27	0.356	0.213
	Band	Mode	Channel	Test Position	Measured 1g SAR (W/kg)	29	65	101	137	28	29	65	101	137	28	29	65	101	137	28	29	65	101	137	28
	BC10	RTAP 153.6Kbps	684	Back	0.412	0.238	0.429	0.048	0.077	0.448	0.315	0.429	0.372	0.143	0.277	0.457	0.181	0.191	0.2	0.172	0.219	0.286	0.248	0.448	0.172
	Band	Mode	Channel	Test Position	Measured 1g SAR (W/kg)	30	66	102	138	29	30	66	102	138	29	30	66	102	138	29	30	66	102	138	29
	LTE B12	10M_QPSK_1_25	23095	Back	0.462	0.261	0.499	0.128	0.261	0.48	0.195	0.09	0.48	0.309	0.442	0.357	0.328	0.204	0.099	0.242	0.252	0.357	0.128	0.071	0.223
	Band	Mode	Channel	Test Position	Measured 1g SAR (W/kg)	31	67	103	139	30	31	67	103	139	30	31	67	103	139	30	31	67	103	139	30
	LTE B13	10M_QPSK_25_12	23230	Back	0.324	0.231	0.374	0.05	0.222	0.117	0.069	0.031	0.136	0.279	0.298	0.326	0.117	0.06	0.184	0.374	0.231	0.145	0.212	0.069	0.098
	Band	Mode	Channel	Test Position	Measured 1g SAR (W/kg)	32	68	104	140	31	32	68	104	140	31	32	68	104	140	31	32	68	104	140	31
	LTE B26	15M_QPSK_1_0	26765	Back	0.442	0.395	0.129	0.167	0.424	0.148	0.433	0.062	0.043	0.271	0.176	0.233	0.3	0.462	0.405	0.395	0.348	0.033	0.338	0.471	0.433
	Band	Mode	Channel	Test Position	Measured 1g SAR (W/kg)	33	69	105	141	32	33	69	105	141	32	33	69	105	141	32	33	69	105	141	32
	LTE B71	10M_QPSK_50_24	133322	Back	0.385	0.063	0.158	0.187	0.196	0.377	0.025	0.254	0.254	0.215	0.263	0.425	0.168	0.187	0.063	0.044	0.377	0.292	0.034	0.168	0.158
	Band	Mode	Channel	Test Position	Measured 1g SAR (W/kg)	34	70	106	142	33	34	70	106	142	33	34	70	106	142	33	34	70	106	142	33
	n5	20M_QPSK_1_1	167800	Back	0.068	0.07	0.06	0.013	0.013	0.003	0.032	0.06	0.022	0.06	0.013	0.06	0.07	0.013	0.032	0.022	0.041	0.07	0.022	0.041	0.013
	Band	Mode	Channel	Test Position	Measured 1g SAR (W/kg)	35	71	107	143	34	35	71	107	143	34	35	71	107	143	34	35	71	107	143	34
	n71	20M_QPSK_1_1	134600	Back	0.054	0.049	0.011	0.059	0.04	0.021	0.059	0.049	0.059	0.059	0.03	0.049	0.049	0.002	0.011	0.021	0.04	0.049	0.021	0.049	0.03

RF exposure position						Aperture 08					Aperture 09					Aperture 10					Aperture 11				
						Average Value of Time Sweep (W/kg)					Average Value of Time Sweep (W/kg)					Average Value of Time Sweep (W/kg)					Average Value of Time Sweep (W/kg)				
WWAN UAT Head	Band	Mode	Channel	Test Position	Measured 1g SAR (W/kg)	0	36	72	108	144	0	36	72	108	144	0	36	72	108	144	0	36	72	108	144
	UMTS B5	RMC12.2Kbps	4233	Left Cheek	0.521	0.669	0.612	0.298	0.679	0.041	0.641	0.298	0.184	0.412	0.593	0.288	0.184	0.403	0.498	0.679	0.422	0.612	0.526	0.622	0.088
	Band	Mode	Channel	Test Position	Measured 1g SAR (W/kg)	1	37	73	109	0	1	37	73	109	0	1	37	73	109	0	1	37	73	109	0
	BC0	RC3+SO55	777	Left Cheek	0.487	0.623	0.042	0.471	0.376	0.509	0.033	0.1	0.271	0.3	0.623	0.442	0.357	0.347	0.519	0.071	0.281	0.547	0.338	0.233	0.614
	Band	Mode	Channel	Test Position	Measured 1g SAR (W/kg)	2	38	74	110	1	2	38	74	110	1	2	38	74	110	1	2	38	74	110	1
	BC10	RC3+SO55	580	Left Cheek	0.515	0.495	0.038	0.248	0.238	0.305	0.048	0.191	0.238	0.714	0.61	0.724	0.457	0.124	0.495	0.6	0.153	0.391	0.495	0.657	0.6
	Band	Mode	Channel	Test Position	Measured 1g SAR (W/kg)	3	39	75	111	2	3	39	75	111	2	3	39	75	111	2	3	39	75	111	2
	LTE B12	10M_QPSK_25_12	23095	Left Cheek	0.47	0.528	0.614	0.347	0.128	0.547	0.109	0.252	0.204	0.452	0.614	0.309	0.204	0.471	0.528	0.366	0.652	0.585	0.09	0.538	0.357
	Band	Mode	Channel	Test Position	Measured 1g SAR (W/kg)	4	40	76	112	3	4	40	76	112	3	4	40	76	112	3	4	40	76	112	3
	LTE B13	10M_QPSK_1_0	23230	Left Cheek	0.554	0.323	0.371	0.551	0.094	0.39	0.523	0.342	0.151	0.123	0.18	0.656	0.628	0.332	0.275	0.723	0.142	0.18	0.428	0.694	0.647
	Band	Mode	Channel	Test Position	Measured 1g SAR (W/kg)	5	41	77	113	4	5	41	77	113	4	5	41	77	113	4	5	41	77	113	4
	LTE B26	15M_QPSK_36_20	26965	Left Cheek	0.534	0.442	0.29	0.642	0.376	0.109	0.395	0.652	0.28	0.147	0.109	0.756	0.471	0.166	0.614	0.452	0.061	0.537	0.442	0.614	0.385
	Band	Mode	Channel	Test Position	Measured 1g SAR (W/kg)	6	42	78	114	5	6	42	78	114	5	6	42	78	114	5	6	42	78	114	5
	LTE B71	10M_QPSK_50_24	133322	Left Cheek	0.505	0.367	0.243	0.196	0.043	0.548	0.539	0.281	0.491	0.615	0.062	0.301	0.243	0.339	0.443	0.281	0.167	0.31	0.434	0.529	0.167
	Band	Mode	Channel	Test Position	Measured 1g SAR (W/kg)	7	43	79	115	6	7	43	79	115	6	7	43	79	115	6	7	43	79	115	6
	n5	20M_QPSK_1_1	167800	Left Cheek	0.057	0.012	0.022	0.031	0.022	0.06	0.06	0.003	0.012	0.05	0.003	0.031	0.003	0.05	0.06	0.031	0.003	0.022	0.012	0.05	0.003
	Band	Mode	Channel	Test Position	Measured 1g SAR (W/kg)	8	44	80	116	7	8	44	80	116	7	8	44	80	116	7	8	44	80	116	7
	n71	20M_QPSK_50_0	136100	Left Cheek	0.058	0.051	0.013	0.061	0.061	0.023	0.013	0.032	0.042	0.023	0.013	0.042	0.032	0.004	0.051	0.042	0.023	0.004	0.061	0.051	0.013
WWAN LAT Head	Band	Mode	Channel	Test Position	Measured 1g SAR (W/kg)	9	45	81	117	8	9	45	81	117	8	9	45	81	117	8	9	45	81	117	8
	UMTS B5	RMC12.2Kbps	4233	Left Cheek	0.154	0.142	0.076	0.009	0.066	0.095	0.076	0.123	0.038	0.019	0.104	0.114	0.133	0.171	0.076	0.142	0.038	0.038	0.142	0.133	0.019
	Band	Mode	Channel	Test Position	Measured 1g SAR (W/kg)	10	46	82	118	9	10	46	82	118	9	10	46	82	118	9	10	46	82	118	9
	BC0	RC3+SO55	1013	Left Cheek	0.142	0.075	0.066	0.056	0.094	0.056	0.066	0.104	0.123	0.113	0.085	0.085	0.132	0.085	0.009	0.123	0.028	0.066	0.037	0.009	0.009
	Band	Mode	Channel	Test Position	Measured 1g SAR (W/kg)	11	47	83	119	10	11	47	83	119	10	11	47	83	119	10	11	47	83	119	10
	BC10	RC3+SO55	684	Left Cheek	0.138	0.167	0.167	0.024	0.015	0.1	0.148	0.062	0.043	0.015	0.157	0.015	0.167	0.138	0.062	0.129	0.053	0.034	0.053	0.138	0.091
	Band	Mode	Channel	Test Position	Measured 1g SAR (W/kg)	12	48	84	120	11	12	48	84	120	11	12	48	84	120	11	12	48	84	120	11
	LTE B12	10M_QPSK_1_0	23095	Left Cheek	0.169	0.04	0.173	0.154	0.069	0.059	0.145	0.183	0.126	0.145	0.012	0.078	0.107	0.078	0.126	0.059	0.088	0.116	0.173	0.012	0.031
	Band	Mode	Channel	Test Position	Measured 1g SAR (W/kg)	13	49	85	121	12	13	49	85	121	12	13	49	85	121	12	13	49	85	121	12
	LTE B13	10M_QPSK_1_0	23230	Left Cheek	0.121	0.14	0.121	0.131	0.026	0.007	0.017	0.026	0.064	0.102	0.112	0.055	0.083	0.007	0.017	0.017	0.045	0.064	0.131	0.131	0.131
	Band	Mode	Channel	Test Position	Measured 1g SAR (W/kg)	14	50	86	122	13	14	50	86	122	13	14	50	86	122	13	14	50	86	122	13
	LTE B26	15M_QPSK_1_0	26915	Left Cheek	0.163	0.157	0.166	0.166	0.119	0.176	0.147	0.176	0.166	0.147	0.176	0.043	0.109	0.147	0.052	0.128	0.119	0.138	0.024	0.176	0.043
	Band	Mode	Channel	Test Position	Measured 1g SAR (W/kg)	15	51	87	123	14	15	51	87	123	14	15	51	87	123	14	15	51	87	123	14
	LTE B71	10M_QPSK_1_0	133322	Left Cheek	0.111	0.025	0.063	0.073	0.12	0.092	0.073	0.101	0.025	0.016	0.073	0.13	0.111	0.006	0.044	0.092	0.063	0.12	0.035	0.073	0.082
	Band	Mode	Channel	Test Position	Measured 1g SAR (W/kg)	16	52	88	124	15	16	52	88	124	15	16	52	88	124	15	16	52	88	124	15
	n5	20M_QPSK_50_1	166800	Left Cheek	0.092	0.015	0.043	0.072	0.129	0.081	0.091	0.091	0.072	0.119	0.091	0.119	0.043	0.034	0.053	0.005	0.081	0.053	0.005	0.1	0.081
	Band	Mode	Channel	Test Position	Measured 1g SAR (W/kg)	17	53	89	125	16	17	53	89	125	16	17	53	89	125	16	17	53	89	125	16
	n71	20M_QPSK_1_1	134600	Left Cheek	0.081	0.007	0.016	0.026	0.026	0.007	0.073	0.054	0.035	0.064	0.045	0.007	0.054	0.016	0.016	0.035	0.064	0.045	0.007	0.083	0.083
WWAN UAT Body	Band	Mode	Channel	Test Position	Measured 1g SAR (W/kg)	18	54	90	126	17	18	54	90	126	17	18	54	90	126	17	18	54	90	126	17
	UMTS B5	RMC12.2Kbps	4182	Left Side	0.699	0.47	0.06	0.965	0.413	0.584	0.794	0.241	0.746	0.079	0.584	0.908	0.289	0.317	0.965	0.965	0.251	0.546	0.403	0.213	0.698
	Band	Mode	Channel	Test Position	Measured 1g SAR (W/kg)	19	55	91	127	18	19	55	91	127	18	19	55	91	127	18	19	55	91	127	18
	BC0	RTAP 153.6Kbps	777	Left Side	0.543	0.394	0.689	0.632	0.47	0.461	0.68	0.404	0.232	0.089	0.051	0.185	0.756	0.737	0.385	0.518	0.356	0.613	0.642	0.07	0.213
	Band	Mode	Channel	Test Position	Measured 1g SAR (W/kg)	20	56	92	128	19	20	56	92	128	19	20	56	92	128	19	20	56	92	128	19
	BC10	RTAP 153.6Kbps	476	Left Side	0.546	0.331	0.303	0.541	0.227	0.217	0.293	0.76	0.589	0.617	0.75	0.512	0.189	0.35	0.684	0.284	0.427	0.436	0.446	0.293	0.15
	Band	Mode	Channel	Test Position	Measured 1g SAR (W/kg)	21	57	93	129	20	21	57	93	129	20	21	57	93	129	20	21	57	93	129	20
	LTE B12	10M_QPSK_1_25	23095	Left Side	0.737	0.554	0.649	0.335	0.583	0.306	0.268	0.449	0.449	0.478	0.268	0.706	0.516	0.506	0.535	0.268	0.725	0.583	0.383	0.325	0.545
	Band	Mode	Channel	Test Position	Measured 1g SAR (W/kg)	22	58	94	130	21	22	58	94	130	21	22	58	94	130	21	22	58	94	130	21
	LTE B13	10M_QPSK_25_12	23230	Left Side	0.582	0.666	0.618	0.751	0.37	0.132	0.104	0.342	0.713	0.589	0.675	0.313	0.323	0.132	0.332	0.551	0.561	0.685	0.237	0.18	0.694
	Band	Mode	Channel	Test Position	Measured 1g SAR (W/kg)	23	59	95	131	22	23	59	95	131	22	23	59	95	131	22	23	59	95	131	22

	LTE B26	15M_QPSK_36_20	26915	Left Side	0.655	0.728	0.366	0.785	0.347	0.566	0.89	0.747	0.204	0.119	0.633	0.185	0.223	0.604	0.452	0.89	0.661	0.157	0.433	0.566	0.776
	Band	Mode	Channel	Test Position	Measured 1g SAR (W/kg)	24	60	96	132	23	24	60	96	132	23	24	60	96	132	23	24	60	96	132	23
	LTE B71	10M_QPSK_1_0	133322	Left Side	0.633	0.688	0.717	0.136	0.469	0.593	0.66	0.364	0.136	0.774	0.583	0.717	0.241	0.221	0.698	0.098	0.374	0.307	0.041	0.583	0.107
	Band	Mode	Channel	Test Position	Measured 1g SAR (W/kg)	25	61	97	133	24	25	61	97	133	24	25	61	97	133	24	25	61	97	133	24
	n5	20M_QPSK_1_1	167800	Left Side	0.11	0.088	0.04	0.05	0.126	0.069	0.04	0.04	0.021	0.107	0.126	0.088	0.069	0.05	0.097	0.126	0.04	0.069	0.107	0.04	0.012
	Band	Mode	Channel	Test Position	Measured 1g SAR (W/kg)	26	62	98	134	25	26	62	98	134	25	26	62	98	134	25	26	62	98	134	25
	n71	20M_QPSK_1_1	134600	Left Side	0.086	0.033	0.024	0.024	0.1	0.043	0.033	0.005	0.024	0.043	0.024	0.033	0.062	0.1	0.071	0.1	0.024	0.024	0.09	0.043	0.071
WWAN LAT Body	Band	Mode	Channel	Test Position	Measured 1g SAR (W/kg)	27	63	99	135	26	27	63	99	135	26	27	63	99	135	26	27	63	99	135	26
	UMTS B5	RMC12.2Kbps	4132	Back	0.432	0.271	0.29	0.09	0.385	0.032	0.09	0.385	0.118	0.042	0.404	0.156	0.242	0.242	0.156	0.194	0.032	0.042	0.413	0.366	0.128
	Band	Mode	Channel	Test Position	Measured 1g SAR (W/kg)	28	64	100	136	27	28	64	100	136	27	28	64	100	136	27	28	64	100	136	27
	BC0	RTAP 153.6Kbps	1013	Back	0.416	0.413	0.27	0.47	0.46	0.022	0.184	0.356	0.089	0.165	0.089	0.394	0.137	0.413	0.47	0.46	0.137	0.28	0.26	0.156	0.375
	Band	Mode	Channel	Test Position	Measured 1g SAR (W/kg)	29	65	101	137	28	29	65	101	137	28	29	65	101	137	28	29	65	101	137	28
	BC10	RTAP 153.6Kbps	684	Back	0.412	0.181	0.162	0.238	0.172	0.248	0.134	0.162	0.124	0.229	0.372	0.315	0.419	0.048	0.267	0.086	0.324	0.057	0.048	0.457	0.353
	Band	Mode	Channel	Test Position	Measured 1g SAR (W/kg)	30	66	102	138	29	30	66	102	138	29	30	66	102	138	29	30	66	102	138	29
	LTE B12	10M_QPSK_1_25	23095	Back	0.462	0.233	0.176	0.09	0.138	0.48	0.461	0.071	0.195	0.147	0.061	0.452	0.29	0.071	0.128	0.023	0.052	0.385	0.204	0.319	0.204
	Band	Mode	Channel	Test Position	Measured 1g SAR (W/kg)	31	67	103	139	30	31	67	103	139	30	31	67	103	139	30	31	67	103	139	30
	LTE B13	10M_QPSK_25_12	23230	Back	0.324	0.279	0.06	0.155	0.069	0.05	0.041	0.184	0.345	0.174	0.355	0.26	0.031	0.307	0.269	0.193	0.05	0.164	0.26	0.279	0.26
	Band	Mode	Channel	Test Position	Measured 1g SAR (W/kg)	32	68	104	140	31	32	68	104	140	31	32	68	104	140	31	32	68	104	140	31
	LTE B26	15M_QPSK_1_0	26765	Back	0.442	0.386	0.214	0.281	0.471	0.252	0.11	0.462	0.271	0.424	0.357	0.052	0.062	0.043	0.081	0.405	0.443	0.043	0.405	0.233	0.271
	Band	Mode	Channel	Test Position	Measured 1g SAR (W/kg)	33	69	105	141	32	33	69	105	141	32	33	69	105	141	32	33	69	105	141	32
	LTE B71	10M_QPSK_50_24	133322	Back	0.385	0.025	0.339	0.092	0.282	0.054	0.12	0.311	0.425	0.073	0.187	0.434	0.368	0.063	0.196	0.13	0.444	0.054	0.368	0.254	0.368
	Band	Mode	Channel	Test Position	Measured 1g SAR (W/kg)	34	70	106	142	33	34	70	106	142	33	34	70	106	142	33	34	70	106	142	33
	n5	20M_QPSK_1_1	167800	Back	0.068	0.06	0.07	0.022	0.032	0.07	0.003	0.022	0.051	0.07	0.051	0.013	0.041	0.032	0.041	0.022	0.003	0.06	0.041	0.041	0.013
	Band	Mode	Channel	Test Position	Measured 1g SAR (W/kg)	35	71	107	143	34	35	71	107	143	34	35	71	107	143	34	35	71	107	143	34
	n71	20M_QPSK_1_1	134600	Back	0.054	0.021	0.03	0.049	0.03	0.049	0.04	0.03	0.002	0.049	0.002	0.002	0.021	0.002	0.021	0.04	0.04	0.002	0.021	0.04	0.04

RF exposure position						Aperture 12					Aperture 13					Aperture 14					Aperture 15				
						Average Value of Time Sweep (W/kg)					Average Value of Time Sweep (W/kg)					Average Value of Time Sweep (W/kg)					Average Value of Time Sweep (W/kg)				
WWAN UAT Head	Band	Mode	Channel	Test Position	Measured 1g SAR (W/kg)	0	36	72	108	144	0	36	72	108	144	0	36	72	108	144	0	36	72	108	144
	UMTS B5	RMC12.2Kbps	4233	Left Cheek	0.521	0.431	0.45	0.307	0.241	0.441	0.117	0.174	0.507	0.46	0.365	0.117	0.069	0.65	0.279	0.679	0.488	0.126	0.546	0.088	0.593
	Band	Mode	Channel	Test Position	Measured 1g SAR (W/kg)	1	37	73	109	0	1	37	73	109	0	1	37	73	109	0	1	37	73	109	0
	BC0	RC3+SO55	777	Left Cheek	0.487	0.633	0.528	0.376	0.452	0.176	0.195	0.176	0.604	0.385	0.347	0.461	0.557	0.1	0.1	0.271	0.328	0.042	0.661	0.309	0.223
	Band	Mode	Channel	Test Position	Measured 1g SAR (W/kg)	2	38	74	110	1	2	38	74	110	1	2	38	74	110	1	2	38	74	110	1
	BC10	RC3+SO55	580	Left Cheek	0.515	0.324	0.038	0.124	0.619	0.657	0.143	0.695	0.6	0.638	0.514	0.429	0.724	0.143	0.41	0.505	0.238	0.467	0.105	0.4	0.581
	Band	Mode	Channel	Test Position	Measured 1g SAR (W/kg)	3	39	75	111	2	3	39	75	111	2	3	39	75	111	2	3	39	75	111	2
	LTE B12	10M_QPSK_25_12	23095	Left Cheek	0.47	0.347	0.242	0.033	0.423	0.49	0.328	0.566	0.509	0.433	0.481	0.461	0.623	0.1	0.461	0.642	0.528	0.147	0.261	0.233	0.252
	Band	Mode	Channel	Test Position	Measured 1g SAR (W/kg)	4	40	76	112	3	4	40	76	112	3	4	40	76	112	3	4	40	76	112	3
	LTE B13	10M_QPSK_1_0	23230	Left Cheek	0.554	0.704	0.523	0.694	0.237	0.113	0.409	0.58	0.513	0.609	0.551	0.151	0.113	0.285	0.742	0.504	0.228	0.151	0.237	0.161	0.075
	Band	Mode	Channel	Test Position	Measured 1g SAR (W/kg)	5	41	77	113	4	5	41	77	113	4	5	41	77	113	4	5	41	77	113	4
	LTE B26	15M_QPSK_36_20	26965	Left Cheek	0.534	0.176	0.318	0.29	0.328	0.147	0.071	0.423	0.385	0.395	0.28	0.661	0.252	0.595	0.699	0.137	0.661	0.642	0.614	0.661	0.509
	Band	Mode	Channel	Test Position	Measured 1g SAR (W/kg)	6	42	78	114	5	6	42	78	114	5	6	42	78	114	5	6	42	78	114	5
	LTE B71	10M_QPSK_50_24	133322	Left Cheek	0.505	0.615	0.224	0.31	0.672	0.653	0.491	0.167	0.558	0.434	0.053	0.158	0.234	0.681	0.472	0.481	0.643	0.491	0.377	0.472	0.558
	Band	Mode	Channel	Test Position	Measured 1g SAR (W/kg)	7	43	79	115	6	7	43	79	115	6	7	43	79	115	6	7	43	79	115	6
	n5	20M_QPSK_1_1	167800	Left Cheek	0.057	0.05	0.05	0.06	0.031	0.022	0.031	0.05	0.012	0.041	0.06	0.031	0.05	0.012	0.022	0.022	0.012	0.012	0.06	0.012	0.041
	Band	Mode	Channel	Test Position	Measured 1g SAR (W/kg)	8	44	80	116	7	8	44	80	116	7	8	44	80	116	7	8	44	80	116	7
	n71	20M_QPSK_50_0	136100	Left Cheek	0.058	0.042	0.061	0.051	0.051	0.004	0.042	0.023	0.004	0.023	0.042	0.004	0.004	0.042	0.004	0.042	0.042	0.042	0.061	0.061	0.042
WWAN LAT Head	Band	Mode	Channel	Test Position	Measured 1g SAR (W/kg)	9	45	81	117	8	9	45	81	117	8	9	45	81	117	8	9	45	81	117	8
	UMTS B5	RMC12.2Kbps	4233	Left Cheek	0.154	0.095	0.076	0.104	0.066	0.161	0.114	0.047	0.104	0.114	0.142	0.133	0.085	0.142	0.095	0.019	0.076	0.104	0.152	0.076	0.028
	Band	Mode	Channel	Test Position	Measured 1g SAR (W/kg)	10	46	82	118	9	10	46	82	118	9	10	46	82	118	9	10	46	82	118	9
	BC0	RC3+SO55	1013	Left Cheek	0.142	0.161	0.151	0.094	0.085	0.047	0.018	0.104	0.132	0.142	0.056	0.037	0.085	0.037	0.075	0.056	0.113	0.018	0.104	0.104	0.104
	Band	Mode	Channel	Test Position	Measured 1g SAR (W/kg)	11	47	83	119	10	11	47	83	119	10	11	47	83	119	10	11	47	83	119	10
	BC10	RC3+SO55	684	Left Cheek	0.138	0.129	0.062	0.081	0.034	0.062	0.167	0.119	0.119	0.138	0.015	0.157	0.053	0.1	0.119	0.024	0.11	0.091	0.034	0.091	0.11
	Band	Mode	Channel	Test Position	Measured 1g SAR (W/kg)	12	48	84	120	11	12	48	84	120	11	12	48	84	120	11	12	48	84	120	11
	LTE B12	10M_QPSK_1_0	23095	Left Cheek	0.169	0.031	0.097	0.173	0.183	0.069	0.107	0.04	0.173	0.135	0.069	0.078	0.088	0.05	0.164	0.097	0.135	0.145	0.164	0.183	0.088
	Band	Mode	Channel	Test Position	Measured 1g SAR (W/kg)	13	49	85	121	12	13	49	85	121	12	13	49	85	121	12	13	49	85	121	12
	LTE B13	10M_QPSK_1_0	23230	Left Cheek	0.121	0.055	0.102	0.14	0.093	0.064	0.102	0.045	0.026	0.064	0.083	0.007	0.055	0.064	0.102	0.121	0.15	0.007	0.017	0.055	0.14
	Band	Mode	Channel	Test Position	Measured 1g SAR (W/kg)	14	50	86	122	13	14	50	86	122	13	14	50	86	122	13	14	50	86	122	13
	LTE B26	15M_QPSK_1_0	26915	Left Cheek	0.163	0.062	0.157	0.176	0.147	0.043	0.052	0.09	0.119	0.071	0.157	0.033	0.09	0.081	0.033	0.081	0.052	0.176	0.043	0.128	0.147
	Band	Mode	Channel	Test Position	Measured 1g SAR (W/kg)	15	51	87	123	14	15	51	87	123	14	15	51	87	123	14	15	51	87	123	14
	LTE B71	10M_QPSK_1_0	133322	Left Cheek	0.111	0.035	0.092	0.025	0.12	0.082	0.13	0.025	0.082	0.073	0.044	0.111	0.054	0.082	0.025	0.063	0.13	0.092	0.111	0.111	0.092
	Band	Mode	Channel	Test Position	Measured 1g SAR (W/kg)	16	52	88	124	15	16	52	88	124	15	16	52	88	124	15	16	52	88	124	15
	n5	20M_QPSK_50_1	166800	Left Cheek	0.092	0.043	0.053	0.034	0.11	0.119	0.129	0.119	0.072	0.1	0.062	0.053	0.053	0.091	0.034	0.1	0.129	0.1	0.053	0.129	0.062
	Band	Mode	Channel	Test Position	Measured 1g SAR (W/kg)	17	53	89	125	16	17	53	89	125	16	17	53	89	125	16	17	53	89	125	16
	n71	20M_QPSK_1_1	134600	Left Cheek	0.081	0.054	0.083	0.054	0.054	0.026	0.035	0.073	0.007	0.045	0.064	0.073	0.045	0.073	0.007	0.016	0.007	0.007	0.045	0.045	0.007
WWAN UAT Body	Band	Mode	Channel	Test Position	Measured 1g SAR (W/kg)	18	54	90	126	17	18	54	90	126	17	18	54	90	126	17	18	54	90	126	17
	UMTS B5	RMC12.2Kbps	4182	Left Side	0.699	0.346	0.374	0.213	0.536	0.66	0.889	0.946	0.355	0.479	0.451	0.917	0.46	0.251	0.584	0.555	0.822	0.479	0.07	0.784	0.765
	Band	Mode	Channel	Test Position	Measured 1g SAR (W/kg)	19	55	91	127	18	19	55	91	127	18	19	55	91	127	18	19	55	91	127	18
	BC0	RTAP 153.6Kbps	777	Left Side	0.543	0.566	0.346	0.089	0.042	0.623	0.423	0.699	0.08	0.756	0.67	0.746	0.746	0.366	0.366	0.194	0.385	0.575	0.185	0.089	0.346
	Band	Mode	Channel	Test Position	Measured 1g SAR (W/kg)	20	56	92	128	19	20	56	92	128	19	20	56	92	128	19	20	56	92	128	19
	BC10	RTAP 153.6Kbps	476	Left Side	0.546	0.541	0.112	0.17	0.312	0.179	0.493	0.055	0.322	0.55	0.56	0.312	0.179	0.56	0.398	0.408	0.57	0.074	0.474	0.608	0.112
	Band	Mode	Channel	Test Position	Measured 1g SAR (W/kg)	21	57	93	129	20	21	57	93	129	20	21	57	93	129	20	21	57	93	129	20
	LTE B12	10M_QPSK_1_25	23095	Left Side	0.737	0.583	0.259	0.068	0.364	0.221	0.592	0.078	0.059	0.459	0.735	0.678	0.64	0.164	0.211	0.278	0.125	0.716	0.164	0.364	0.164
	Band	Mode	Channel	Test Position	Measured 1g SAR (W/kg)	22	58	94	130	21	22	58	94	130	21	22	58	94	130	21	22	58	94	130	21
	LTE B13	10M_QPSK_25_12	23230	Left Side	0.582	0.77	0.085	0.513	0.713	0.304	0.066	0.704	0.151	0.351	0.542	0.17	0.351	0.361	0.742	0.447	0.066	0.304	0.551	0.399	0.57
	Band	Mode	Channel	Test Position	Measured 1g SAR (W/kg)	23	59	95	131	22	23	59	95	131	22	23	59	95	131	22	23	59	95	131	22

	LTE B26	15M_QPSK_36_20	26915	Left Side	0.655	0.671	0.48	0.528	0.223	0.423	0.242	0.423	0.08	0.528	0.252	0.604	0.633	0.823	0.823	0.814	0.166	0.366	0.052	0.728	0.128
	Band	Mode	Channel	Test Position	Measured 1g SAR (W/kg)	24	60	96	132	23	24	60	96	132	23	24	60	96	132	23	24	60	96	132	23
	LTE B71	10M_QPSK_1_0	133322	Left Side	0.633	0.364	0.641	0.202	0.25	0.602	0.745	0.269	0.755	0.412	0.202	0.307	0.06	0.621	0.212	0.183	0.555	0.507	0.183	0.707	0.65
	Band	Mode	Channel	Test Position	Measured 1g SAR (W/kg)	25	61	97	133	24	25	61	97	133	24	25	61	97	133	24	25	61	97	133	24
	n5	20M_QPSK_1_1	167800	Left Side	0.11	0.126	0.021	0.069	0.126	0.078	0.05	0.059	0.116	0.059	0.05	0.021	0.031	0.126	0.126	0.126	0.107	0.069	0.116	0.021	0.04
	Band	Mode	Channel	Test Position	Measured 1g SAR (W/kg)	26	62	98	134	25	26	62	98	134	25	26	62	98	134	25	26	62	98	134	25
	n71	20M_QPSK_1_1	134600	Left Side	0.086	0.024	0.081	0.024	0.024	0.005	0.071	0.043	0.071	0.024	0.062	0.09	0.033	0.052	0.09	0.09	0.005	0.09	0.1	0.005	0.033
WWAN LAT Body	Band	Mode	Channel	Test Position	Measured 1g SAR (W/kg)	27	63	99	135	26	27	63	99	135	26	27	63	99	135	26	27	63	99	135	26
	UMTS B5	RMC12.2Kbps	4132	Back	0.432	0.061	0.375	0.261	0.109	0.175	0.413	0.413	0.318	0.356	0.223	0.413	0.042	0.232	0.118	0.223	0.328	0.099	0.404	0.071	0.261
	Band	Mode	Channel	Test Position	Measured 1g SAR (W/kg)	28	64	100	136	27	28	64	100	136	27	28	64	100	136	27	28	64	100	136	27
	BC0	RTAP 153.6Kbps	1013	Back	0.416	0.089	0.28	0.441	0.213	0.118	0.203	0.213	0.175	0.127	0.184	0.451	0.232	0.203	0.022	0.451	0.146	0.47	0.451	0.127	0.289
	Band	Mode	Channel	Test Position	Measured 1g SAR (W/kg)	29	65	101	137	28	29	65	101	137	28	29	65	101	137	28	29	65	101	137	28
	BC10	RTAP 153.6Kbps	684	Back	0.412	0.077	0.048	0.2	0.315	0.343	0.153	0.134	0.172	0.219	0.153	0.191	0.353	0.257	0.143	0.41	0.419	0.353	0.162	0.391	0.277
	Band	Mode	Channel	Test Position	Measured 1g SAR (W/kg)	30	66	102	138	29	30	66	102	138	29	30	66	102	138	29	30	66	102	138	29
	LTE B12	10M_QPSK_1_25	23095	Back	0.462	0.357	0.204	0.071	0.395	0.042	0.023	0.147	0.48	0.452	0.471	0.29	0.185	0.328	0.052	0.309	0.204	0.461	0.214	0.033	0.138
	Band	Mode	Channel	Test Position	Measured 1g SAR (W/kg)	31	67	103	139	30	31	67	103	139	30	31	67	103	139	30	31	67	103	139	30
	LTE B13	10M_QPSK_25_12	23230	Back	0.324	0.317	0.174	0.193	0.345	0.345	0.164	0.069	0.269	0.26	0.041	0.317	0.241	0.345	0.069	0.193	0.336	0.317	0.279	0.317	0.231
	Band	Mode	Channel	Test Position	Measured 1g SAR (W/kg)	32	68	104	140	31	32	68	104	140	31	32	68	104	140	31	32	68	104	140	31
	LTE B26	15M_QPSK_1_0	26765	Back	0.442	0.367	0.405	0.033	0.167	0.148	0.205	0.148	0.262	0.281	0.414	0.129	0.243	0.062	0.281	0.386	0.348	0.119	0.224	0.3	0.367
	Band	Mode	Channel	Test Position	Measured 1g SAR (W/kg)	33	69	105	141	32	33	69	105	141	32	33	69	105	141	32	33	69	105	141	32
	LTE B71	10M_QPSK_50_24	133322	Back	0.385	0.349	0.339	0.311	0.377	0.396	0.13	0.282	0.377	0.292	0.377	0.406	0.311	0.044	0.168	0.301	0.377	0.425	0.415	0.415	0.206
	Band	Mode	Channel	Test Position	Measured 1g SAR (W/kg)	34	70	106	142	33	34	70	106	142	33	34	70	106	142	33	34	70	106	142	33
	n5	20M_QPSK_1_1	167800	Back	0.068	0.06	0.051	0.06	0.032	0.032	0.041	0.003	0.022	0.06	0.032	0.041	0.051	0.07	0.06	0.06	0.06	0.041	0.051	0.013	0.041
	Band	Mode	Channel	Test Position	Measured 1g SAR (W/kg)	35	71	107	143	34	35	71	107	143	34	35	71	107	143	34	35	71	107	143	34
	n71	20M_QPSK_1_1	134600	Back	0.054	0.011	0.059	0.03	0.049	0.059	0.021	0.002	0.03	0.011	0.021	0.011	0.021	0.04	0.002	0.011	0.011	0.049	0.04	0.002	0.04

RF exposure position						Average Value of Time Sweep (W/kg)				
WWAN UAT Head	Band	Mode	Channel	Test Position	Measured 1g SAR (W/kg)	Auto-Tune (State 28)	0	46	92	138
	UMTS B4	RMC12.2Kbps	1513	Right Tilted	0.566	0.824	0.203	0.241	0.089	0.727
	Band	Mode	Channel	Test Position	Measured 1g SAR (W/kg)	Auto-Tune (State 34)	1	47	93	139
	UMTS B2	RMC12.2Kbps	9400	Right Tilted	0.654	0.99	0.778	0.14	0.626	0.502
	Band	Mode	Channel	Test Position	Measured 1g SAR (W/kg)	Auto-Tune (State 33)	2	48	94	140
	BC1	RC3+SO55	1175	Right Tilted	0.6	0.914	0.893	0.674	0.655	0.655
	Band	Mode	Channel	Test Position	Measured 1g SAR (W/kg)	Auto-Tune (State 99)	3	49	95	141
	B7	20_QPSK_1_0	20850	Right Cheek	0.688	0.938	0.336	0.536	0.326	0.774
	Band	Mode	Channel	Test Position	Measured 1g SAR (W/kg)	Auto-Tune (State 33)	4	50	96	142
	B25	20_QPSK_100_0	26590	Right Tilted	0.773	1.19	0.626	0.788	0.75	0.598
	Band	Mode	Channel	Test Position	Measured 1g SAR (W/kg)	Auto-Tune (State 90)	5	51	97	143
	B30	10_QPSK_25_12	27710	Right Tilted	0.777	1.01	0.932	0.922	0.779	0.17
	Band	Mode	Channel	Test Position	Measured 1g SAR (W/kg)	Auto-Tune (State 28)	6	52	98	144
	B66	20_QPSK_1_0	132572	Right Tilted	0.583	0.925	0.704	0.58	0.456	0.818
	Band	Mode	Channel	Test Position	Measured 1g SAR (W/kg)	Auto-Tune (State 99)	7	53	99	0
	B41	20_QPSK_50_24	39750	Right Cheek	0.663	0.936	0.658	0.258	0.248	0.344
	Band	Mode	Channel	Test Position	Measured 1g SAR (W/kg)	Auto-Tune (State 0)	8	54	100	1
	B48	20_QPSK_1_0	56640	Right Tilted	0.846	1.18	1.008	0.242	0.938	0.357
	Band	Mode	Channel	Test Position	Measured 1g SAR (W/kg)	Auto-Tune (State 106)	9	55	101	2
	n2	20_QPSK_50_56	372000	Right Cheek	0.631	1.15	0.253	0.148	0.262	1.043
	Band	Mode	Channel	Test Position	Measured 1g SAR (W/kg)	Auto-Tune (State 10)	10	56	102	3
	n66	20_QPSK_50_0	354000	Right Tilted	0.671	1.07	0.23	1.011	0.878	0.43
	Band	Mode	Channel	Test Position	Measured 1g SAR (W/kg)	Auto-Tune (State 99)	11	57	103	4
	n41	100_QPSK_1_1	509200	Right Tilted	0.908	1.65	0.581	0.534	1.391	0.153
WWAN LAT Head	Band	Mode	Channel	Test Position	Measured 1g SAR (W/kg)	Auto-Tune (State 83)	12	58	104	5
	UMTS B4	RMC12.2Kbps	1513	Left Cheek	0.244	0.308	0.258	0.144	0.306	0.23
	Band	Mode	Channel	Test Position	Measured 1g SAR (W/kg)	Auto-Tune (State 64)	13	59	105	6
	UMTS B2	RMC12.2Kbps	9400	Right Cheek	0.257	0.315	0.237	0.284	0.084	0.037
	Band	Mode	Channel	Test Position	Measured 1g SAR (W/kg)	Auto-Tune (State 65)	14	60	106	7
	BC1	RC3+SO55	25	Right Cheek	0.245	0.303	0.244	0.301	0.206	0.215
	Band	Mode	Channel	Test Position	Measured 1g SAR (W/kg)	Auto-Tune (State 53)	15	61	107	8
	B7	20_QPSK_1_0	21350	Left Cheek	0.323	0.428	0.188	0.036	0.036	0.064
	Band	Mode	Channel	Test Position	Measured 1g SAR (W/kg)	Auto-Tune (State 65)	16	62	108	9
	B25	20_QPSK_1_0	26340	Right Cheek	0.311	0.342	0.073	0.321	0.14	0.13
	Band	Mode	Channel	Test Position	Measured 1g SAR (W/kg)	Auto-Tune (State 143)	17	63	109	10
	B30	10_QPSK_1_0	27710	Left Cheek	0.329	0.436	0.11	0.215	0.32	0.32
	Band	Mode	Channel	Test Position	Measured 1g SAR (W/kg)	Auto-Tune (State 46)	18	64	110	11
	B66	20_QPSK_1_0	132572	Right Cheek	0.228	0.313	0.282	0.197	0.159	0.101
	Band	Mode	Channel	Test Position	Measured 1g SAR (W/kg)	Auto-Tune (State 134)	19	65	111	12
	B41	20_QPSK_1_49	41490	Left Cheek	0.272	0.354	0.238	0.304	0.219	0.333
	Band	Mode	Channel	Test Position	Measured 1g SAR (W/kg)	Auto-Tune (State 118)	20	66	112	13
	n2	20_QPSK_50_0	380000	Right Cheek	0.139	0.198	0.127	0.08	0.07	0.127
	Band	Mode	Channel	Test Position	Measured 1g SAR (W/kg)	Auto-Tune (State 46)	21	67	113	14
	n66	20_QPSK_1_1	354000	Right Tilted	0.17	0.185	0.149	0.101	0.082	0.149
	Band	Mode	Channel	Test Position	Measured 1g SAR (W/kg)	Auto-Tune (State 136)	22	68	114	15
	n41	100_QPSK_1_1	518600	Left Cheek	0.19	0.332	0.263	0.197	0.073	0.301
WWAN UAT Body	Band	Mode	Channel	Test Position	Measured 1g SAR (W/kg)	Auto-Tune (State 28)	23	69	115	16
	UMTS B4	RMC12.2Kbps	1513	Top Side	0.682	0.92	0.738	0.643	0.291	0.719
	Band	Mode	Channel	Test Position	Measured 1g SAR (W/kg)	Auto-Tune (State 34)	24	70	116	17
	UMTS B2	RMC12.2Kbps	9538	Top Side	0.736	0.99	0.598	0.178	0.236	0.778
	Band	Mode	Channel	Test Position	Measured 1g SAR (W/kg)	Auto-Tune (State 65)	25	71	117	18
	BC1	RTAP 153.6Kbps	1175	Top Side	0.234	0.348	0.251	0.06	0.241	0.279
	Band	Mode	Channel	Test Position	Measured 1g SAR (W/kg)	Auto-Tune (State 99)	26	72	118	19
	B7	20_QPSK_100_0	20850	Top Side	0.807	1.1	0.376	0.258	0.505	0.537
	Band	Mode	Channel	Test Position	Measured 1g SAR (W/kg)	Auto-Tune (State 33)	27	73	119	20
	B25	20_QPSK_1_0	26590	Top Side	0.561	0.762	0.494	0.378	0.178	0.302
	Band	Mode	Channel	Test Position	Measured 1g SAR (W/kg)	Auto-Tune (State 90)	28	74	120	21
	B30	10_QPSK_1_0	27710	Top Side	0.815	1.11	0.832	0.403	0.565	0.118
	Band	Mode	Channel	Test Position	Measured 1g SAR (W/kg)	Auto-Tune (State 28)	29	75	121	22
	B66	20_QPSK_1_0	132572	Top Side	0.721	0.951	0.854	0.444	0.273	0.673
	Band	Mode	Channel	Test Position	Measured 1g SAR (W/kg)	Auto-Tune (State 99)	30	76	122	23

	B41	20_QPSK_1_0	39790	Top Side	0.839	1.19	0.178	0.302	0.207	0.226
	Band	Mode	Channel	Test Position	Measured 1g SAR (W/kg)	Auto-Tune (State 0)	31	77	123	24
	B48	20_QPSK_1_0	56640	Top Side	0.636	1.15	0.348	0.538	0.71	0.167
	Band	Mode	Channel	Test Position	Measured 1g SAR (W/kg)	Auto-Tune (State 106)	32	78	124	25
	n2	20_QPSK_1_1	376000	Top Side	0.654	0.968	0.299	0.28	0.642	0.385
	Band	Mode	Channel	Test Position	Measured 1g SAR (W/kg)	Auto-Tune (State 10)	33	79	125	26
	n66	20_QPSK_50_56	Top Side	Top Side	0.642	0.941	0.653	0.653	0.796	0.272
	Band	Mode	Channel	Test Position	Measured 1g SAR (W/kg)	Auto-Tune (State 99)	34	80	126	27
	n41	100_QPSK_1_1	509200	Top Side	0.846	1.15	0.815	0.415	0.253	1.08
WWAN LAT Body	Band	Mode	Channel	Test Position	Measured 1g SAR (W/kg)	Auto-Tune (State 83)	35	81	127	28
	UMTS B4	RMC12.2Kbps	1312	Bottom Side	0.734	0.98	0.359	0.818	0.359	0.197
	Band	Mode	Channel	Test Position	Measured 1g SAR (W/kg)	Auto-Tune (State 64)	36	82	128	29
	UMTS B2	RMC12.2Kbps	9538	Bottom Side	0.489	1.02	0.247	0.428	0.742	0.599
	Band	Mode	Channel	Test Position	Measured 1g SAR (W/kg)	Auto-Tune (State 65)	37	83	129	30
	BC1	RTAP 153.6Kbps	1175	Bottom Side	0.6	0.763	0.732	0.104	0.113	0.171
	Band	Mode	Channel	Test Position	Measured 1g SAR (W/kg)	Auto-Tune (State 53)	38	84	130	31
	B7	20_QPSK_50_24	20850	Back	0.503	0.745	0.257	0.429	0.143	0.686
	Band	Mode	Channel	Test Position	Measured 1g SAR (W/kg)	Auto-Tune (State 65)	39	85	131	32
	B25	20_QPSK_50_24	26340	Bottom Side	0.441	0.618	0.454	0.568	0.187	0.587
	Band	Mode	Channel	Test Position	Measured 1g SAR (W/kg)	Auto-Tune (State 143)	40	86	132	33
	B30	10_QPSK_25_12	27710	Bottom Side	0.45	0.551	0.387	0.139	0.397	0.197
	Band	Mode	Channel	Test Position	Measured 1g SAR (W/kg)	Auto-Tune (State 46)	41	87	133	34
	B66	20_QPSK_50_24	132322	Bottom Side	0.704	0.964	0.638	0.514	0.924	0.657
	Band	Mode	Channel	Test Position	Measured 1g SAR (W/kg)	Auto-Tune (State 134)	42	88	134	35
	B41	20_QPSK_50_24	39750	Back	0.499	0.725	0.466	0.399	0.724	0.513
	Band	Mode	Channel	Test Position	Measured 1g SAR (W/kg)	Auto-Tune (State 118)	43	89	135	36
	n2	20_QPSK_50_50	376000	Bottom Side	0.561	0.798	0.548	0.253	0.786	0.415
	Band	Mode	Channel	Test Position	Measured 1g SAR (W/kg)	Auto-Tune (State 46)	44	90	136	37
	n66	20_QPSK_1_1	354000	Bottom Side	0.661	0.958	0.642	0.366	0.27	0.889
	Band	Mode	Channel	Test Position	Measured 1g SAR (W/kg)	Auto-Tune (State 136)	45	91	137	38
	n41	100_QPSK_1_1	518600	Back	0.382	0.618	0.559	0.13	0.273	0.397

Test Engineer : Willie Huang Lewis Chang Charles Shen Jack Yang Ray Sun and Ginger Chiang

20. Uncertainty Assessment

Per KDB 865664 D01 SAR measurement 100MHz to 6GHz, when the highest measured 1-g SAR within a frequency band is < 1.5 W/kg and the measured 10-g SAR within a frequency band is < 3.75 W/kg. The expanded SAR measurement uncertainty must be ≤ 30%, for a confidence interval of k = 2. If these conditions are met, extensive SAR measurement uncertainty analysis described in IEEE Std 1528-2013 is not required in SAR reports submitted for equipment approval. For this device, the highest measured 1-g SAR is less 1.5W/kg and highest measured 10-g SAR is less 3.75W/kg. Therefore, the measurement uncertainty table is not required in this report.

21. References

[1] FCC 47 CFR Part 2 “Frequency Allocations and Radio Treaty Matters; General Rules and Regulations”

[2] ANSI/IEEE Std. C95.1-1992, “IEEE Standard for Safety Levels with Respect to Human Exposure to Radio Frequency Electromagnetic Fields, 3 kHz to 300 GHz”, September 1992

[3] IEEE Std. 1528-2013, “IEEE Recommended Practice for Determining the Peak Spatial-Average Specific Absorption Rate (SAR) in the Human Head from Wireless Communications Devices: Measurement Techniques”, Sep 2013

[4] SPEAG DASY System Handbook

[5] FCC KDB 248227 D01 v02r02, “SAR Guidance for IEEE 802.11 (WiFi) Transmitters”, Oct 2015.

[6] FCC KDB 447498 D01 v06, “Mobile and Portable Device RF Exposure Procedures and Equipment Authorization Policies”, Oct 2015

[7] FCC KDB 648474 D04 v01r03, “SAR Evaluation Considerations for Wireless Handsets”, Oct 2015.

[8] FCC KDB 941225 D01 v03r01, “3G SAR MEAUREMENT PROCEDURES”, Oct 2015

[9] FCC KDB 941225 D05 v02r05, “SAR Evaluation Considerations for LTE Devices”, Dec 2015

[10] FCC KDB 941225 D05A v01r02, “Rel. 10 LTE SAR Test Guidance and KDB Inquiries”, Oct 2015

[11] FCC KDB 941225 D06 v02r01, "SAR Evaluation Procedures for Portable Devices with Wireless Router Capabilities", Oct 2015.

[12] FCC KDB 941225 D07 v01r02, " SAR Evaluation Procedures for UMPC Mini-Tablet Devices", Oct 2015.

[13] FCC KDB 865664 D01 v01r04, "SAR Measurement Requirements for 100 MHz to 6 GHz", Aug 2015.

[14] FCC KDB 865664 D02 v01r02, “RF Exposure Compliance Reporting and Documentation Considerations” Oct 2015.