System Check_Head_750MHz

DUT: D750V3-1107

Communication System: CW ; Frequency: 750 MHz;Duty Cycle: 1:1
Medium: HSL_750_200120 Medium parameters used: f = 750 MHz; σ = 0.913 S/m; ε_r = 41.797; ρ = 1000 kg/m^3
Ambient Temperature：23.1 ℃; Liquid Temperature：22.1 ℃

DASY5 Configuration:
- Probe: ES3DV3 - SN3184; ConvF(6.61, 6.61, 6.61) @ 750 MHz; Calibrated: 2019/9/25
- Sensor-Surface: 3mm (Mechanical Surface Detection)
- Electronics: DAE4 Sn1305; Calibrated: 2019/4/30
- Phantom: SAM_Right; Type: QD000P40CD; Serial: TP:1683
- Measurement SW: DASY52, Version 52.10 (2);SEMCAD X Version 14.6.12 (7470)

Pin=250mW/Area Scan (61x61x1): Interpolated grid: dx=1.500 mm, dy=1.500 mm
Maximum value of SAR (interpolated) = 2.37 W/kg

Pin=250mW/Zoom Scan (5x5x7)/Cube 0: Measurement grid: dx=8mm, dy=8mm, dz=5mm
Reference Value = 52.29 V/m; Power Drift = -0.05 dB
Peak SAR (extrapolated) = 2.80 W/kg
SAR(1 g) = 2.04 W/kg; SAR(10 g) = 1.4 W/kg
Maximum value of SAR (measured) = 2.34 W/kg

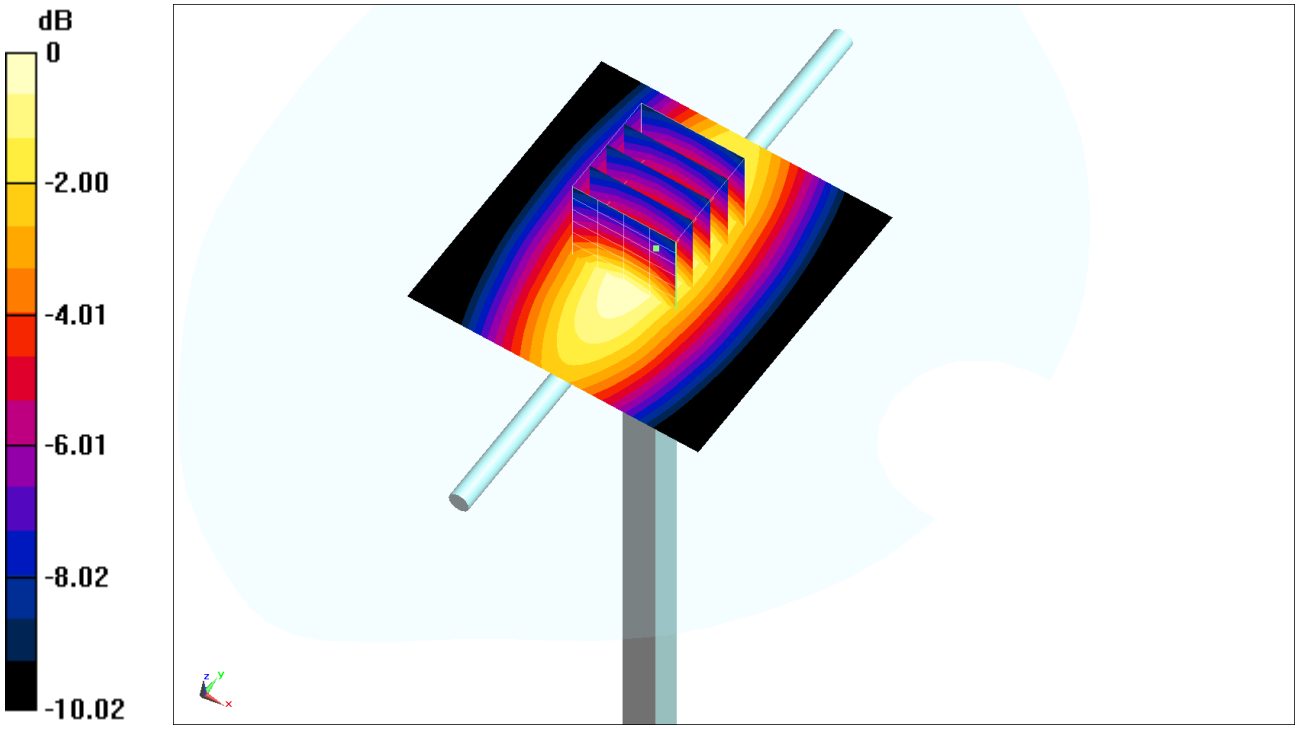

0 dB = 2.34 W/kg = 3.69 dBW/kg

System Check_Head_750MHz

DUT: D750V3-1107

Communication System: CW ; Frequency: 750 MHz;Duty Cycle: 1:1
Medium: HSL_750_200121 Medium parameters used: f = 750 MHz; σ = 0.906 S/m; ε_r = 41.507; ρ = 1000 kg/m^3
Ambient Temperature：23.5 ℃; Liquid Temperature：22.5 ℃

DASY5 Configuration:
- Probe: ES3DV3 - SN3184; ConvF(6.61, 6.61, 6.61) @ 750 MHz; Calibrated: 2019/9/25
- Sensor-Surface: 3mm (Mechanical Surface Detection)
- Electronics: DAE4 Sn1305; Calibrated: 2019/4/30
- Phantom: SAM_Right; Type: QD000P40CD; Serial: TP:1683
- Measurement SW: DASY52, Version 52.10 (2);SEMCAD X Version 14.6.12 (7470)

Pin=250mW/Area Scan (61x61x1): Interpolated grid: dx=1.500 mm, dy=1.500 mm
Maximum value of SAR (interpolated) = 2.36 W/kg

Pin=250mW/Zoom Scan (5x5x7)/Cube 0: Measurement grid: dx=8mm, dy=8mm, dz=5mm
Reference Value = 52.29 V/m; Power Drift = -0.02 dB
Peak SAR (extrapolated) = 2.78 W/kg
SAR(1 g) = 2.03 W/kg; SAR(10 g) = 1.39 W/kg
Maximum value of SAR (measured) = 2.33 W/kg

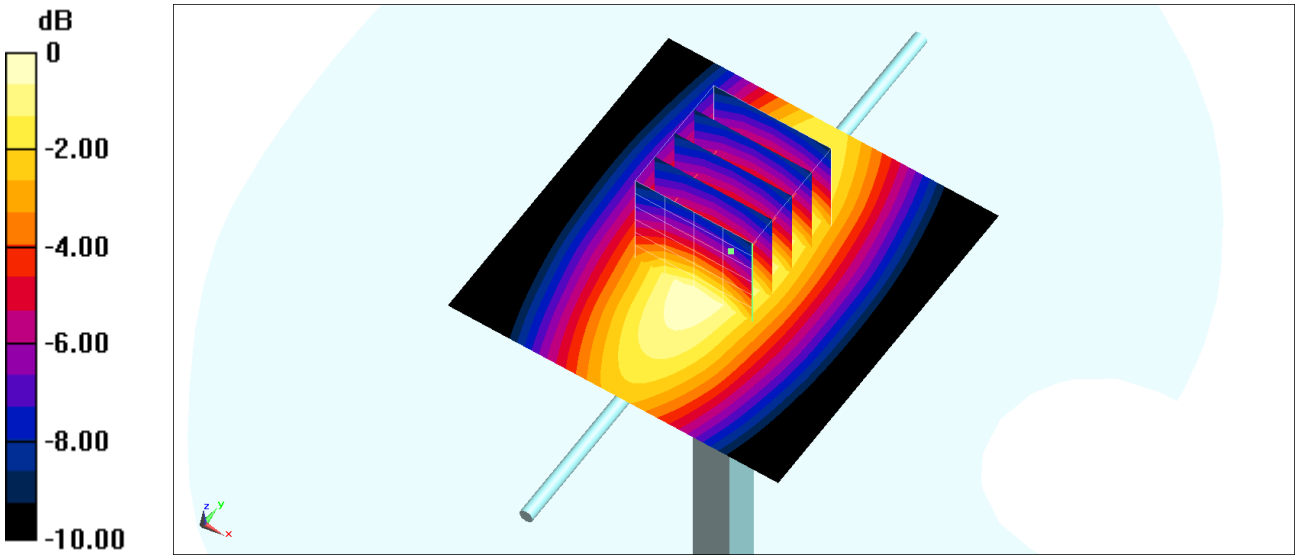

0 dB = 2.33 W/kg = 3.67 dBW/kg

System Check_Head_750MHz

DUT: D750V3-1107

Communication System: CW ; Frequency: 750 MHz;Duty Cycle: 1:1
Medium: HSL_750_200122 Medium parameters used: f = 750 MHz; σ = 0.917 S/m; ε_r = 41.897; ρ = 1000 kg/m^3
Ambient Temperature：23.6 ℃; Liquid Temperature：22.6 ℃

DASY5 Configuration:
- Probe: ES3DV3 - SN3184; ConvF(6.61, 6.61, 6.61) @ 750 MHz; Calibrated: 2019/9/25
- Sensor-Surface: 3mm (Mechanical Surface Detection)
- Electronics: DAE4 Sn1305; Calibrated: 2019/4/30
- Phantom: SAM_Right; Type: QD000P40CD; Serial: TP:1683
- Measurement SW: DASY52, Version 52.10 (2);SEMCAD X Version 14.6.12 (7470)

Pin=250mW/Area Scan (61x61x1): Interpolated grid: dx=1.500 mm, dy=1.500 mm
Maximum value of SAR (interpolated) = 2.39 W/kg

Pin=250mW/Zoom Scan (5x5x7)/Cube 0: Measurement grid: dx=8mm, dy=8mm, dz=5mm
Reference Value = 52.29 V/m; Power Drift = -0.05 dB
Peak SAR (extrapolated) = 2.81 W/kg
SAR(1 g) = 2.06 W/kg; SAR(10 g) = 1.41 W/kg
Maximum value of SAR (measured) = 2.35 W/kg

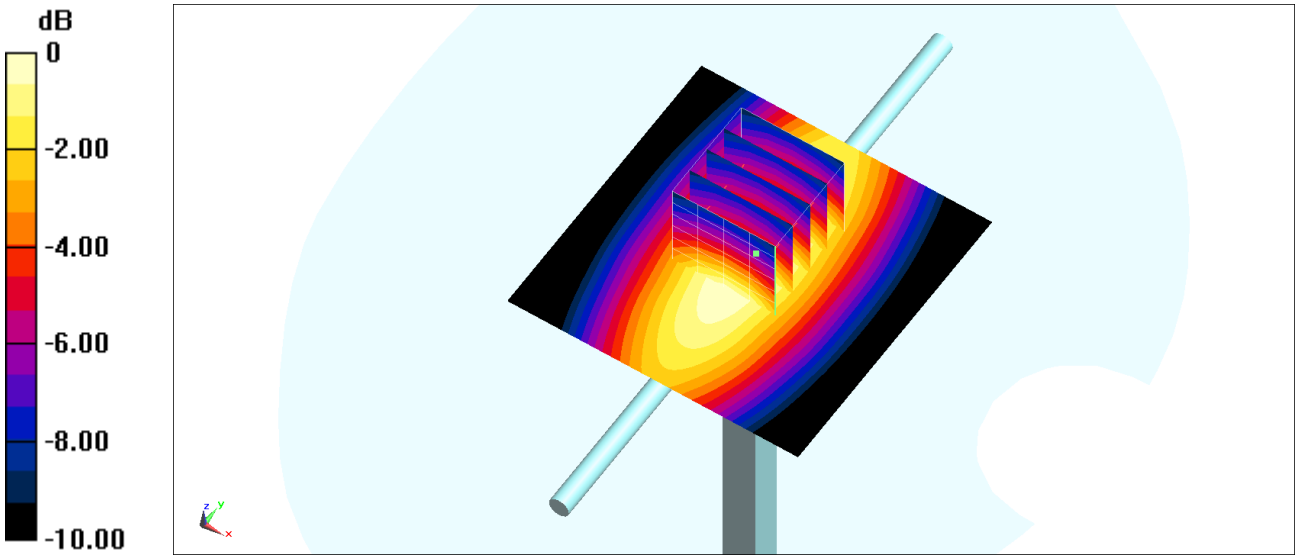

0 dB = 2.35 W/kg = 3.71 dBW/kg

System Check_Head_750MHz

DUT: D750V3-1107

Communication System: CW ; Frequency: 750 MHz;Duty Cycle: 1:1
Medium: HSL_750_200123 Medium parameters used: f = 750 MHz; σ = 0.907 S/m; ε_r = 41.51; ρ = 1000 kg/m^3
Ambient Temperature：23.4 ℃; Liquid Temperature：22.4 ℃

DASY5 Configuration:
- Probe: ES3DV3 - SN3184; ConvF(6.61, 6.61, 6.61) @ 750 MHz; Calibrated: 2019/9/25
- Sensor-Surface: 3mm (Mechanical Surface Detection)
- Electronics: DAE4 Sn1305; Calibrated: 2019/4/30
- Phantom: SAM_Right; Type: QD000P40CD; Serial: TP:1683
- Measurement SW: DASY52, Version 52.10 (2);SEMCAD X Version 14.6.12 (7470)

Pin=250mW/Area Scan (61x61x1): Interpolated grid: dx=1.500 mm, dy=1.500 mm
Maximum value of SAR (interpolated) = 2.36 W/kg

Pin=250mW/Zoom Scan (5x5x7)/Cube 0: Measurement grid: dx=8mm, dy=8mm, dz=5mm
Reference Value = 52.29 V/m; Power Drift = -0.07 dB
Peak SAR (extrapolated) = 2.78 W/kg
SAR(1 g) = 2.03 W/kg; SAR(10 g) = 1.39 W/kg
Maximum value of SAR (measured) = 2.33 W/kg

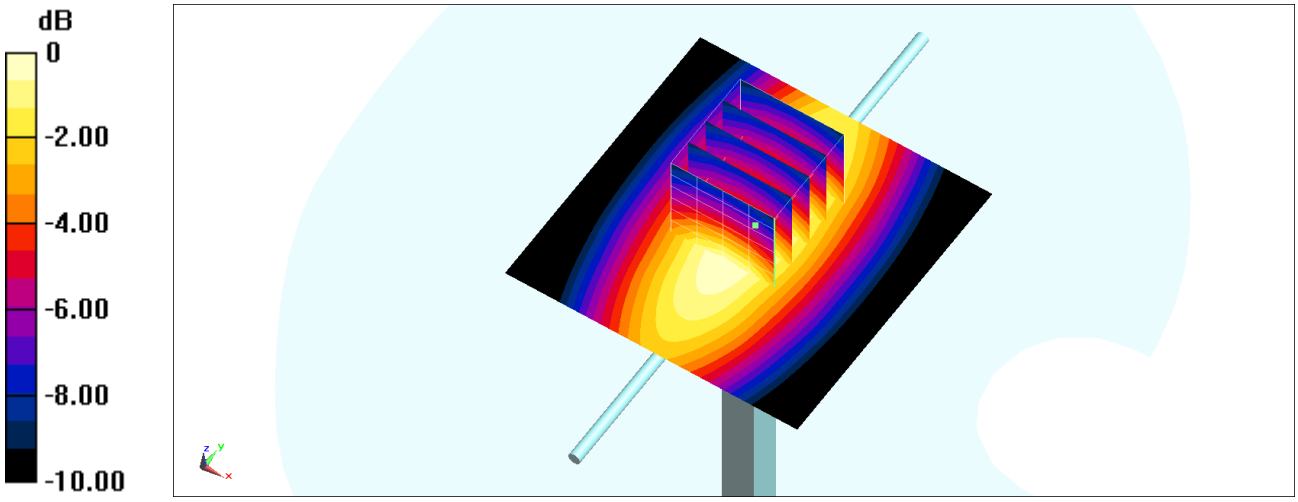

0 dB = 2.33 W/kg = 3.67 dBW/kg

System Check_Head_750MHz

DUT: D750V3-1107

Communication System: CW ; Frequency: 750 MHz;Duty Cycle: 1:1
Medium: HSL_750_200212 Medium parameters used: f = 750 MHz; σ = 0.908 S/m; ε_r = 40.927; ρ = 1000 kg/m^3
Ambient Temperature：23.5 ℃; Liquid Temperature：22.5 ℃

DASY5 Configuration:
- Probe: EX3DV4 - SN7346; ConvF(10.19, 10.19, 10.19) @ 750 MHz; Calibrated: 2019/4/25
- Sensor-Surface: 1.4mm (Mechanical Surface Detection)
- Electronics: DAE4 Sn853; Calibrated: 2019/7/18
- Phantom: SAM_Left; Type: QD000P40CD; Serial: TP:1477
- Measurement SW: DASY52, Version 52.10 (2);SEMCAD X Version 14.6.12 (7470)

Pin=250mW/Area Scan (61x61x1): Interpolated grid: dx=1.500 mm, dy=1.500 mm
Maximum value of SAR (interpolated) = 3.08 W/kg

Pin=250mW/Zoom Scan (5x5x7)/Cube 0: Measurement grid: dx=8mm, dy=8mm, dz=5mm
Reference Value = 57.52 V/m; Power Drift = -0.12 dB
Peak SAR (extrapolated) = 3.38 W/kg
SAR(1 g) = 2.17 W/kg; SAR(10 g) = 1.45 W/kg
Maximum value of SAR (measured) = 2.90 W/kg

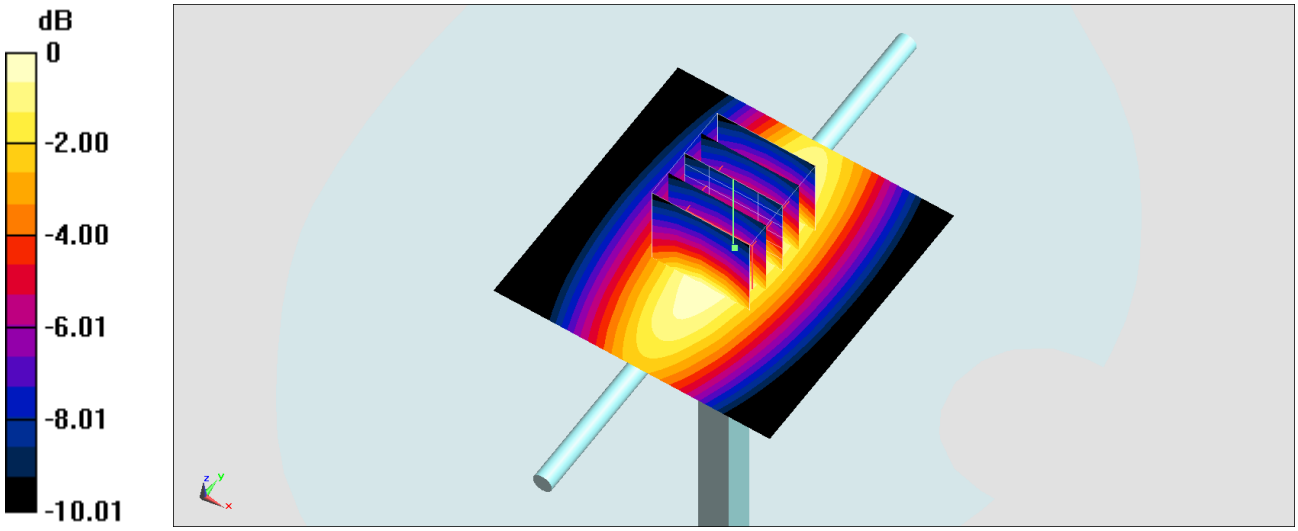

0 dB = 2.90 W/kg = 4.62 dBW/kg

System Check_Head_750MHz

DUT: D750V3-1107

Communication System: CW; Frequency: 750 MHz;Duty Cycle: 1:1
Medium: HSL_750_200217 Medium parameters used: f = 750 MHz; σ = 0.903 S/m; ε_r = 43.07; ρ = 1000 kg/m^3
Ambient Temperature：23.2 ℃; Liquid Temperature：22.2 ℃

DASY5 Configuration:
- Probe: EX3DV4 - SN7346; ConvF(10.19, 10.19, 10.19) @ 750 MHz; Calibrated: 2019/4/25
- Sensor-Surface: 1.4mm (Mechanical Surface Detection)
- Electronics: DAE4 Sn853; Calibrated: 2019/7/18
- Phantom: SAM_Left; Type: QD000P40CD; Serial: TP:1477
- Measurement SW: DASY52, Version 52.10 (2);SEMCAD X Version 14.6.12 (7470)

Pin=250mW/Area Scan (61x61x1): Interpolated grid: dx=1.500 mm, dy=1.500 mm
Maximum value of SAR (interpolated) = 3.05 W/kg

Pin=250mW/Zoom Scan (5x5x7)/Cube 0: Measurement grid: dx=8mm, dy=8mm, dz=5mm
Reference Value = 63.89 V/m; Power Drift = -0.11 dB
Peak SAR (extrapolated) = 3.52 W/kg
SAR(1 g) = 2.24 W/kg; SAR(10 g) = 1.49 W/kg
Maximum value of SAR (measured) = 3.05 W/kg

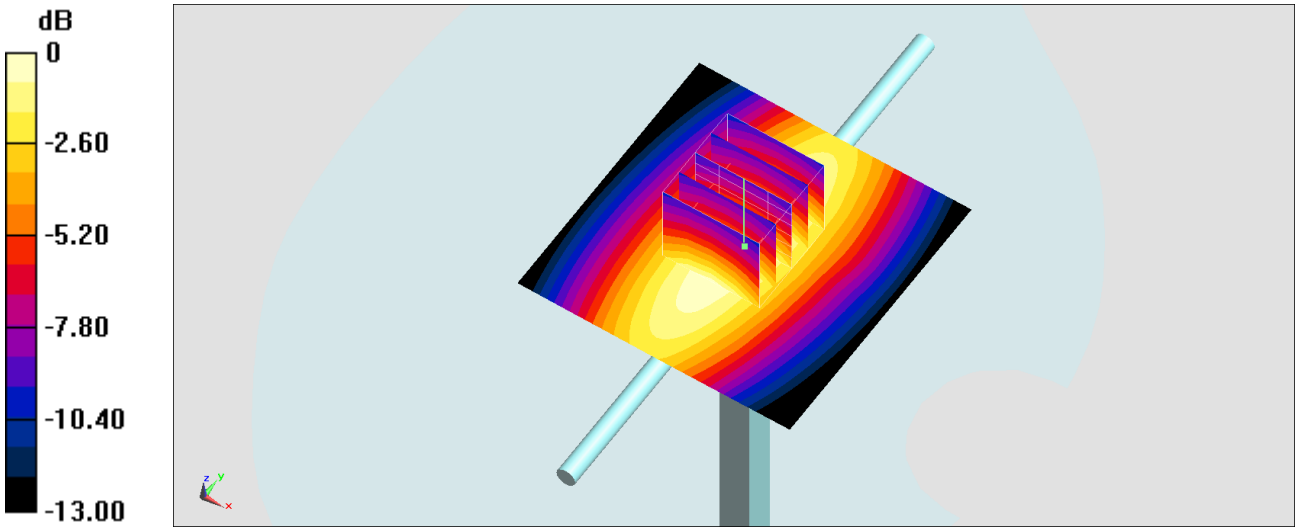

0 dB = 3.05 W/kg = 4.84 dBW/kg

System Check_Head_835MHz

DUT: D835V2-4d167

Communication System: CW; Frequency: 835 MHz;Duty Cycle: 1:1
Medium: HSL_850_200119 Medium parameters used: f = 835 MHz; σ = 0.912 S/m; ε_r = 41.418; ρ = 1000 kg/m^3
Ambient Temperature：23.8 ℃; Liquid Temperature：22.8 ℃

DASY5 Configuration:
- Probe: ES3DV3 - SN3184; ConvF(6.41, 6.41, 6.41) @ 835 MHz; Calibrated: 2019/9/25
- Sensor-Surface: 3mm (Mechanical Surface Detection)
- Electronics: DAE4 Sn1305; Calibrated: 2019/4/30
- Phantom: SAM_Right; Type: QD000P40CD; Serial: TP:1683
- Measurement SW: DASY52, Version 52.10 (2);SEMCAD X Version 14.6.12 (7470)

Pin=250mW/Area Scan (61x61x1): Interpolated grid: dx=1.500 mm, dy=1.500 mm
Maximum value of SAR (interpolated) = 2.62 W/kg

Pin=250mW/Zoom Scan (5x5x7)/Cube 0: Measurement grid: dx=8mm, dy=8mm, dz=5mm
Reference Value = 54.59 V/m; Power Drift = -0.06 dB
Peak SAR (extrapolated) = 3.14 W/kg
SAR(1 g) = 2.24 W/kg; SAR(10 g) = 1.51 W/kg
Maximum value of SAR (measured) = 2.58 W/kg

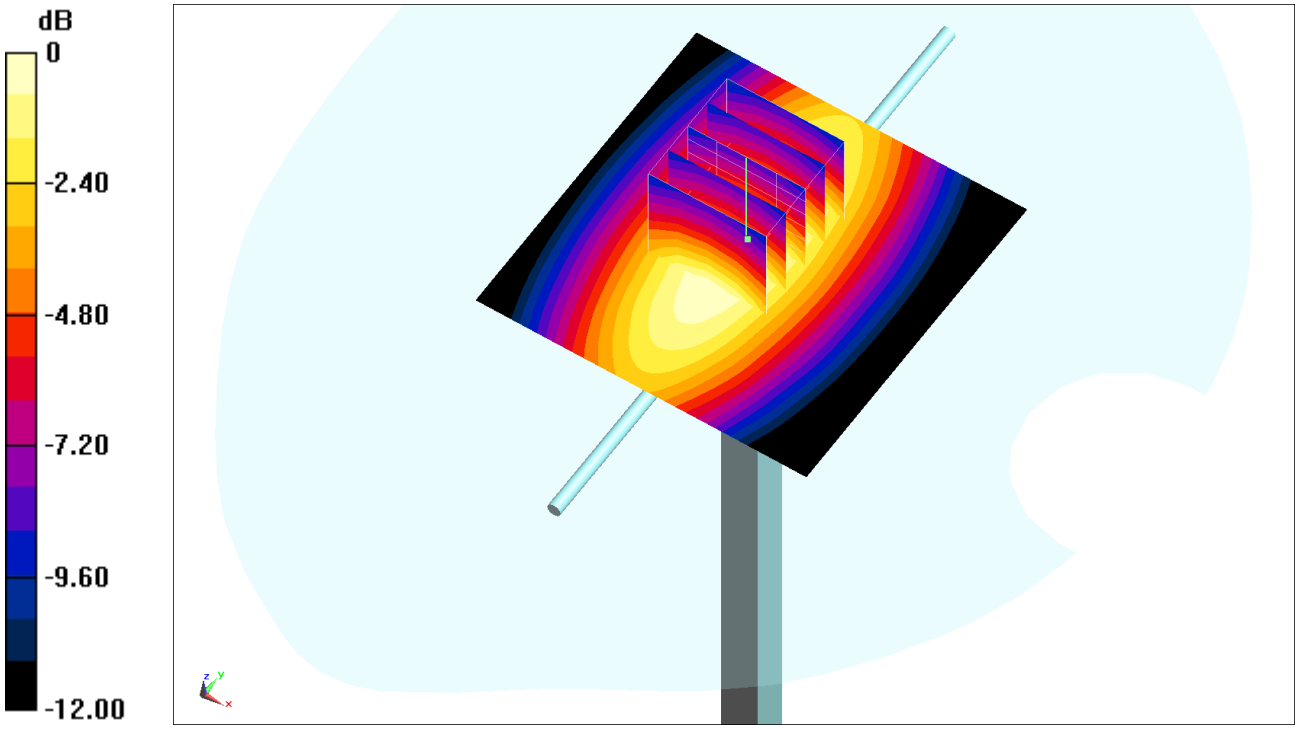

0 dB = 2.58 W/kg = 4.12 dBW/kg

System Check_Head_835MHz

DUT: D835V2-4d167

Communication System: CW; Frequency: 835 MHz;Duty Cycle: 1:1
Medium: HSL_850_200120 Medium parameters used: f = 835 MHz; σ = 0.872 S/m; ε_r = 41.898; ρ = 1000 kg/m^3
Ambient Temperature：23.6 ℃; Liquid Temperature：22.6 ℃

DASY5 Configuration:
- Probe: EX3DV4 - SN7346; ConvF(9.81, 9.81, 9.81) @ 835 MHz; Calibrated: 2019/4/25
- Sensor-Surface: 1.4mm (Mechanical Surface Detection)
- Electronics: DAE4 Sn853; Calibrated: 2019/7/18
- Phantom: SAM_Left; Type: QD000P40CD; Serial: TP:1477
- Measurement SW: DASY52, Version 52.10 (2);SEMCAD X Version 14.6.12 (7470)

Pin=250mW/Area Scan (61x61x1): Interpolated grid: dx=1.500 mm, dy=1.500 mm
Maximum value of SAR (interpolated) = 3.57 W/kg

Pin=250mW/Zoom Scan (5x5x7)/Cube 0: Measurement grid: dx=8mm, dy=8mm, dz=5mm
Reference Value = 64.87 V/m; Power Drift = -0.11 dB
Peak SAR (extrapolated) = 3.83 W/kg
SAR(1 g) = 2.37 W/kg; SAR(10 g) = 1.52 W/kg
Maximum value of SAR (measured) = 3.27 W/kg

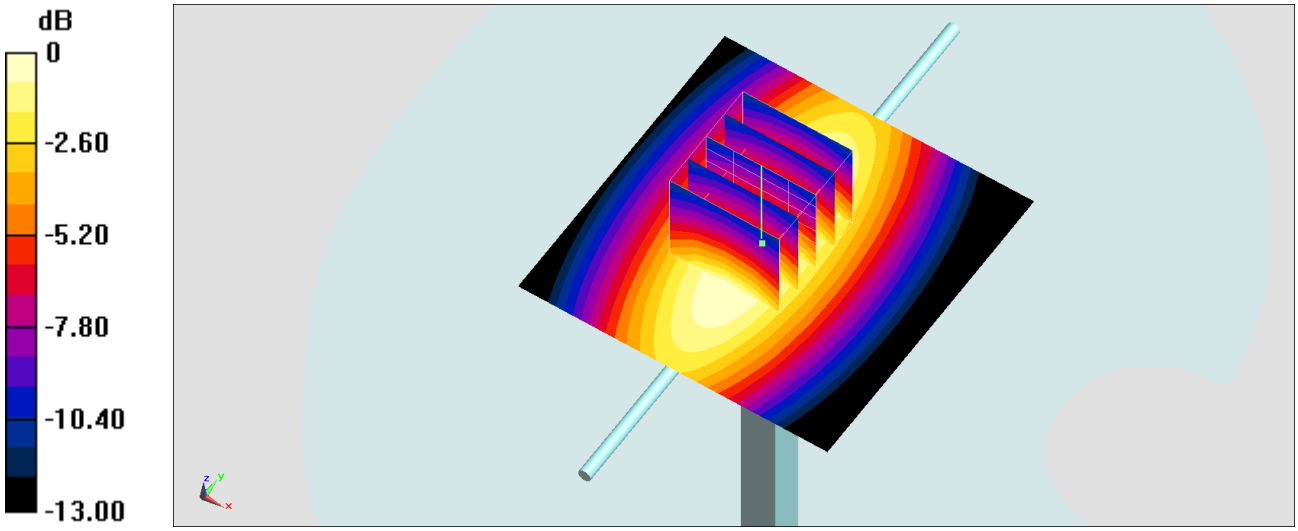

0 dB = 3.27 W/kg = 5.15 dBW/kg

System Check_Head_835MHz

DUT: D835V2-4d167

Communication System: CW; Frequency: 835 MHz;Duty Cycle: 1:1
Medium: HSL_850_200121 Medium parameters used: f = 835 MHz; σ = 0.918 S/m; ε_r = 41.502; ρ = 1000 kg/m^3
Ambient Temperature：23.2 ℃; Liquid Temperature：22.2 ℃

DASY5 Configuration:
- Probe: ES3DV3 - SN3184; ConvF(6.41, 6.41, 6.41) @ 835 MHz; Calibrated: 2019/9/25
- Sensor-Surface: 3mm (Mechanical Surface Detection)
- Electronics: DAE4 Sn1305; Calibrated: 2019/4/30
- Phantom: SAM_Right; Type: QD000P40CD; Serial: TP:1683
- Measurement SW: DASY52, Version 52.10 (2);SEMCAD X Version 14.6.12 (7470)

Pin=250mW/Area Scan (61x61x1): Interpolated grid: dx=1.500 mm, dy=1.500 mm
Maximum value of SAR (interpolated) = 2.78 W/kg

Pin=250mW/Zoom Scan (5x5x7)/Cube 0: Measurement grid: dx=8mm, dy=8mm, dz=5mm
Reference Value = 56.34 V/m; Power Drift = 0.05 dB
Peak SAR (extrapolated) = 3.50 W/kg
SAR(1 g) = 2.38 W/kg; SAR(10 g) = 1.57 W/kg
Maximum value of SAR (measured) = 2.78 W/kg

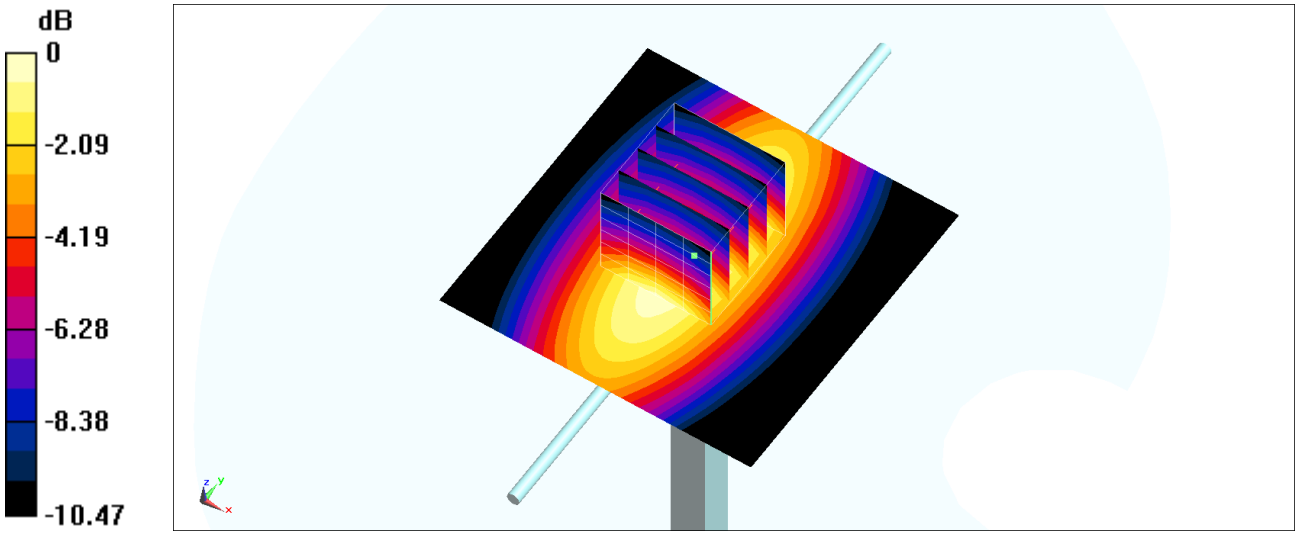

0 dB = 2.78 W/kg = 4.44 dBW/kg

System Check_Head_835MHz

DUT: D835V2-4d167

Communication System: CW; Frequency: 835 MHz;Duty Cycle: 1:1
Medium: HSL_850_200123 Medium parameters used: f = 835 MHz; σ = 0.896 S/m; ε_r = 40.819; ρ = 1000 kg/m^3
Ambient Temperature：23.4 ℃; Liquid Temperature：22.4 ℃

DASY5 Configuration:
- Probe: ES3DV3 - SN3184; ConvF(6.41, 6.41, 6.41) @ 835 MHz; Calibrated: 2019/9/25
- Sensor-Surface: 3mm (Mechanical Surface Detection)
- Electronics: DAE4 Sn1305; Calibrated: 2019/4/30
- Phantom: SAM_Right; Type: QD000P40CD; Serial: TP:1683
- Measurement SW: DASY52, Version 52.10 (2);SEMCAD X Version 14.6.12 (7470)

Pin=250mW/Area Scan (61x61x1): Interpolated grid: dx=1.500 mm, dy=1.500 mm
Maximum value of SAR (interpolated) = 2.57 W/kg

Pin=250mW/Zoom Scan (5x5x7)/Cube 0: Measurement grid: dx=8mm, dy=8mm, dz=5mm
Reference Value = 54.59 V/m; Power Drift = -0.16 dB
Peak SAR (extrapolated) = 3.09 W/kg
SAR(1 g) = 2.2 W/kg; SAR(10 g) = 1.48 W/kg
Maximum value of SAR (measured) = 2.54 W/kg

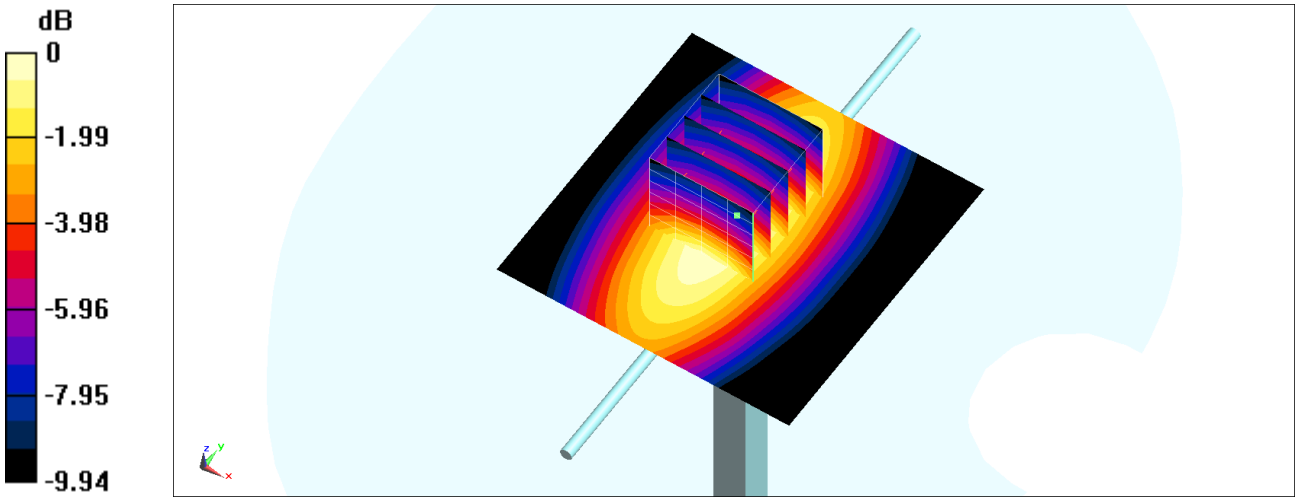

0 dB = 2.54 W/kg = 4.05 dBW/kg

System Check_Head_835MHz

DUT: D835V2-4d167

Communication System: CW; Frequency: 835 MHz;Duty Cycle: 1:1
Medium: HSL_850_200210 Medium parameters used: f = 835 MHz; σ = 0.873 S/m; ε_r = 42.953; ρ = 1000 kg/m^3
Ambient Temperature：23.2 ℃; Liquid Temperature：22.2 ℃

DASY5 Configuration:
- Probe: EX3DV4 - SN7346; ConvF(9.81, 9.81, 9.81) @ 835 MHz; Calibrated: 2019/4/25
- Sensor-Surface: 1.4mm (Mechanical Surface Detection)
- Electronics: DAE4 Sn853; Calibrated: 2019/7/18
- Phantom: SAM_Left; Type: QD000P40CD; Serial: TP:1477
- Measurement SW: DASY52, Version 52.10 (2);SEMCAD X Version 14.6.12 (7470)

Pin=250mW/Area Scan (61x61x1): Interpolated grid: dx=1.500 mm, dy=1.500 mm
Maximum value of SAR (interpolated) = 3.58 W/kg

Pin=250mW/Zoom Scan (5x5x7)/Cube 0: Measurement grid: dx=8mm, dy=8mm, dz=5mm
Reference Value = 64.87 V/m; Power Drift = -0.03 dB
Peak SAR (extrapolated) = 3.83 W/kg
SAR(1 g) = 2.37 W/kg; SAR(10 g) = 1.52 W/kg
Maximum value of SAR (measured) = 3.28 W/kg

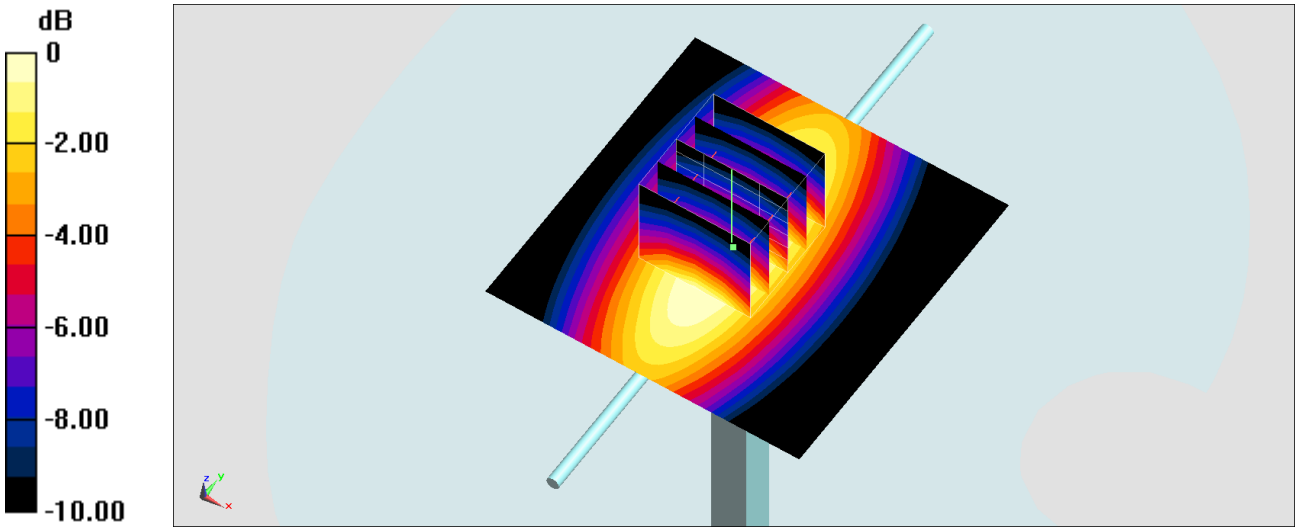

0 dB = 3.28 W/kg = 5.16 dBW/kg

System Check_Head_835MHz

DUT: D835V2-4d167

Communication System: CW; Frequency: 835 MHz;Duty Cycle: 1:1
Medium: HSL_850_200217 Medium parameters used: f = 835 MHz; σ = 0.87 S/m; ε_r = 42.358; ρ = 1000 kg/m^3
Ambient Temperature：23.2 ℃; Liquid Temperature：22.2 ℃

DASY5 Configuration:
- Probe: EX3DV4 - SN7346; ConvF(9.81, 9.81, 9.81) @ 835 MHz; Calibrated: 2019/4/25
- Sensor-Surface: 1.4mm (Mechanical Surface Detection)
- Electronics: DAE4 Sn853; Calibrated: 2019/7/18
- Phantom: SAM_Left; Type: QD000P40CD; Serial: TP:1477
- Measurement SW: DASY52, Version 52.10 (2);SEMCAD X Version 14.6.12 (7470)

Pin=250mW/Area Scan (61x61x1): Interpolated grid: dx=1.500 mm, dy=1.500 mm
Maximum value of SAR (interpolated) = 3.41 W/kg

Pin=250mW/Zoom Scan (5x5x7)/Cube 0: Measurement grid: dx=8mm, dy=8mm, dz=5mm
Reference Value = 61.91 V/m; Power Drift = -0.12 dB
Peak SAR (extrapolated) = 3.77 W/kg
SAR(1 g) = 2.41 W/kg; SAR(10 g) = 1.59 W/kg
Maximum value of SAR (measured) = 3.27 W/kg

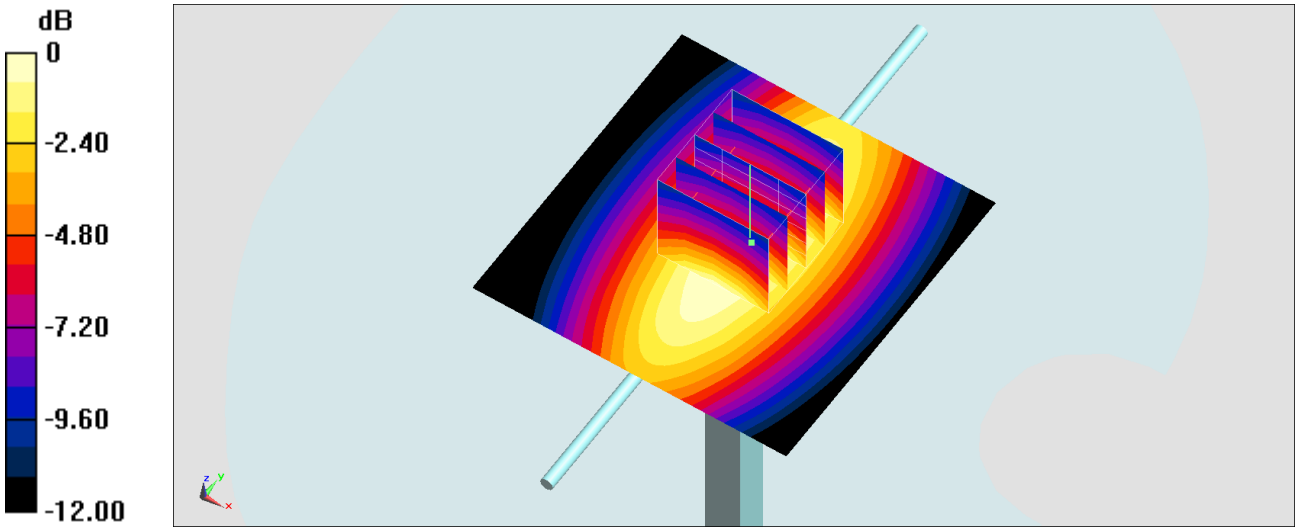

0 dB = 3.27 W/kg = 5.15 dBW/kg

System Check_Head_835MHz

DUT: D835V2-4d167

Communication System: CW; Frequency: 835 MHz;Duty Cycle: 1:1
Medium: HSL_850_200218 Medium parameters used: f = 835 MHz; σ = 0.91 S/m; ε_r = 41.745; ρ = 1000 kg/m^3
Ambient Temperature：23.7 ℃; Liquid Temperature：22.7 ℃

DASY5 Configuration:
- Probe: ES3DV3 - SN3184; ConvF(6.41, 6.41, 6.41) @ 835 MHz; Calibrated: 2019/9/25
- Sensor-Surface: 3mm (Mechanical Surface Detection)
- Electronics: DAE4 Sn1305; Calibrated: 2019/4/30
- Phantom: SAM_Right; Type: QD000P40CD; Serial: TP:1683
- Measurement SW: DASY52, Version 52.10 (2);SEMCAD X Version 14.6.12 (7470)

Pin=250mW/Area Scan (61x61x1): Interpolated grid: dx=1.500 mm, dy=1.500 mm
Maximum value of SAR (interpolated) = 2.61 W/kg

Pin=250mW/Zoom Scan (5x5x7)/Cube 0: Measurement grid: dx=8mm, dy=8mm, dz=5mm
Reference Value = 54.59 V/m; Power Drift = -0.18 dB
Peak SAR (extrapolated) = 3.14 W/kg
SAR(1 g) = 2.24 W/kg; SAR(10 g) = 1.5 W/kg
Maximum value of SAR (measured) = 2.58 W/kg

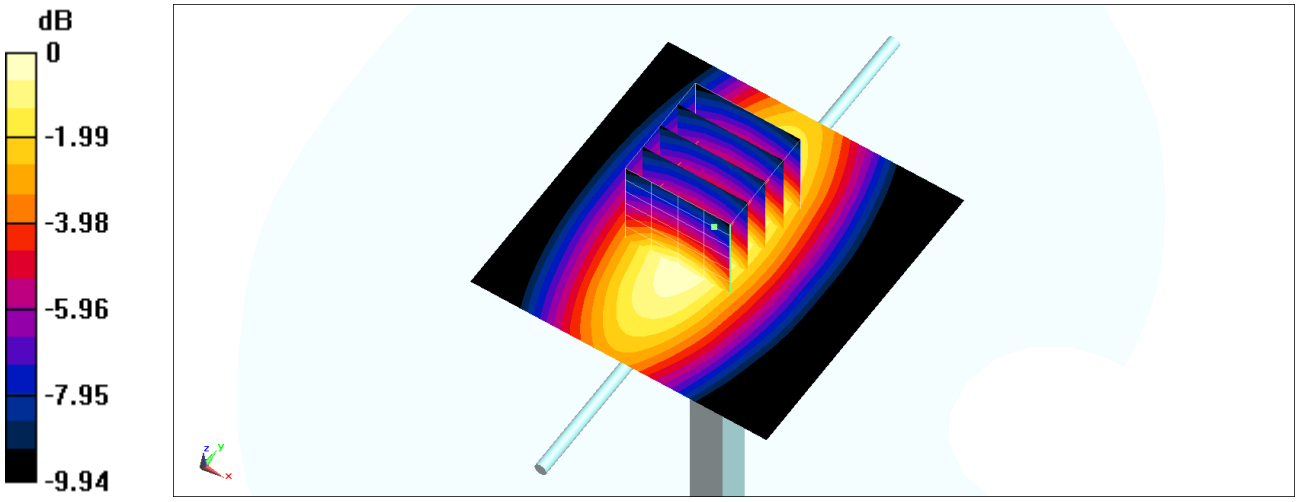

0 dB = 2.58 W/kg = 4.12 dBW/kg

System Check_Head_1750MHz

DUT: D1750V2-1112

Communication System: CW; Frequency: 1750 MHz;Duty Cycle: 1:1
Medium: HSL_1750_200119 Medium parameters used: f = 1750 MHz; σ = 1.361 S/m; ε_r = 41.624; ρ = 1000 kg/m^3
Ambient Temperature：23.3 ℃; Liquid Temperature：22.3 ℃

DASY5 Configuration:
- Probe: ES3DV3 - SN3184; ConvF(5.45, 5.45, 5.45) @ 1750 MHz; Calibrated: 2019/9/25
- Sensor-Surface: 3mm (Mechanical Surface Detection)
- Electronics: DAE4 Sn1305; Calibrated: 2019/4/30
- Phantom: SAM_Left; Type: QD000P40CD; Serial: TP:1684
- Measurement SW: DASY52, Version 52.10 (2);SEMCAD X Version 14.6.12 (7470)

Pin=250mW/Area Scan (61x61x1): Interpolated grid: dx=1.500 mm, dy=1.500 mm
Maximum value of SAR (interpolated) = 11.4 W/kg

Pin=250mW/Zoom Scan (5x5x7)/Cube 0: Measurement grid: dx=8mm, dy=8mm, dz=5mm
Reference Value = 89.35 V/m; Power Drift = 0.12 dB
Peak SAR (extrapolated) = 15.7 W/kg
SAR(1 g) = 8.76 W/kg; SAR(10 g) = 4.66 W/kg
Maximum value of SAR (measured) = 11.0 W/kg

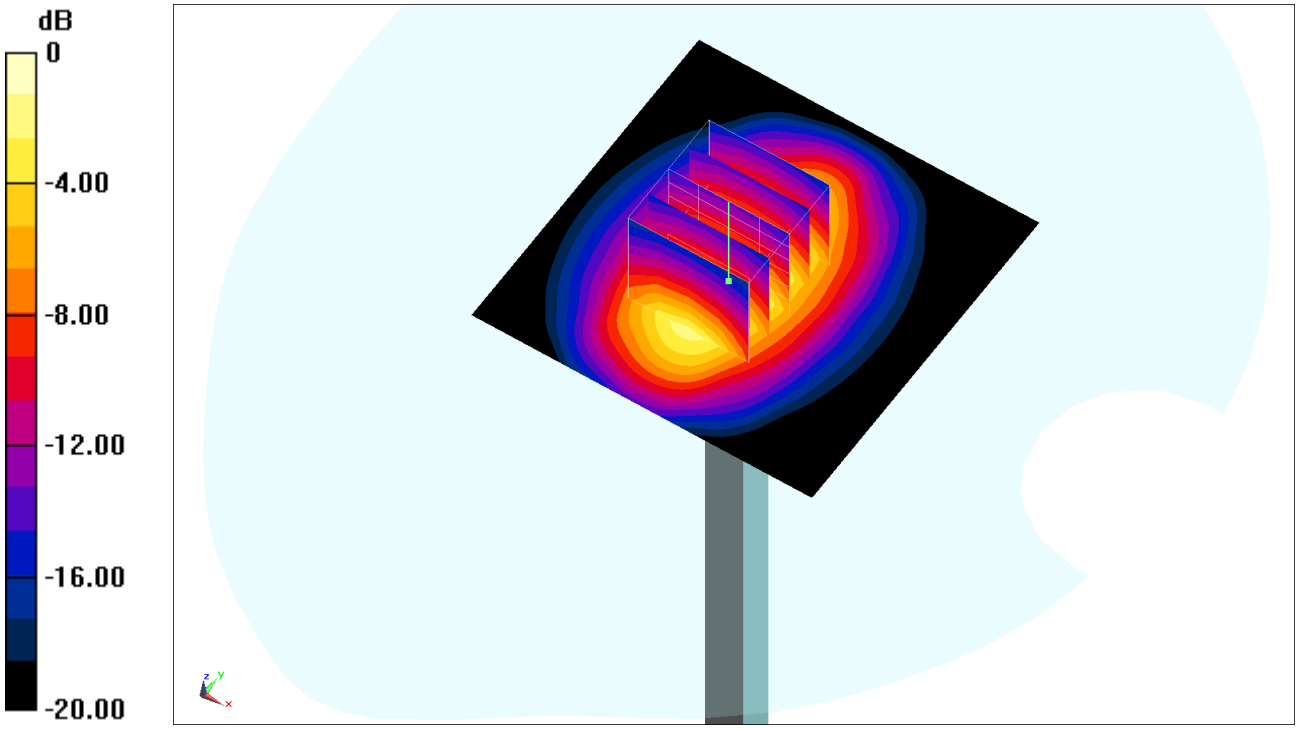

0 dB = 11.0 W/kg = 10.41 dBW/kg

System Check_Head_1750MHz

DUT: D1750V2-1112

Communication System: CW; Frequency: 1750 MHz;Duty Cycle: 1:1
Medium: HSL_1750_200124 Medium parameters used: f = 1750 MHz; σ = 1.386 S/m; ε_r = 39.136; ρ = 1000 kg/m^3
Ambient Temperature：23.7 ℃; Liquid Temperature：22.7 ℃

DASY5 Configuration:
- Probe: ES3DV3 - SN3184; ConvF(5.45, 5.45, 5.45) @ 1750 MHz; Calibrated: 2019/9/25
- Sensor-Surface: 3mm (Mechanical Surface Detection)
- Electronics: DAE4 Sn1305; Calibrated: 2019/4/30
- Phantom: SAM_Left; Type: QD000P40CD; Serial: TP:1684
- Measurement SW: DASY52, Version 52.10 (2);SEMCAD X Version 14.6.12 (7470)

Pin=250mW/Area Scan (61x61x1): Interpolated grid: dx=1.500 mm, dy=1.500 mm
Maximum value of SAR (interpolated) = 11.6 W/kg

Pin=250mW/Zoom Scan (5x5x7)/Cube 0: Measurement grid: dx=8mm, dy=8mm, dz=5mm
Reference Value = 89.35 V/m; Power Drift = 0.12 dB
Peak SAR (extrapolated) = 16.0 W/kg
SAR(1 g) = 8.92 W/kg; SAR(10 g) = 4.75 W/kg
Maximum value of SAR (measured) = 11.2 W/kg

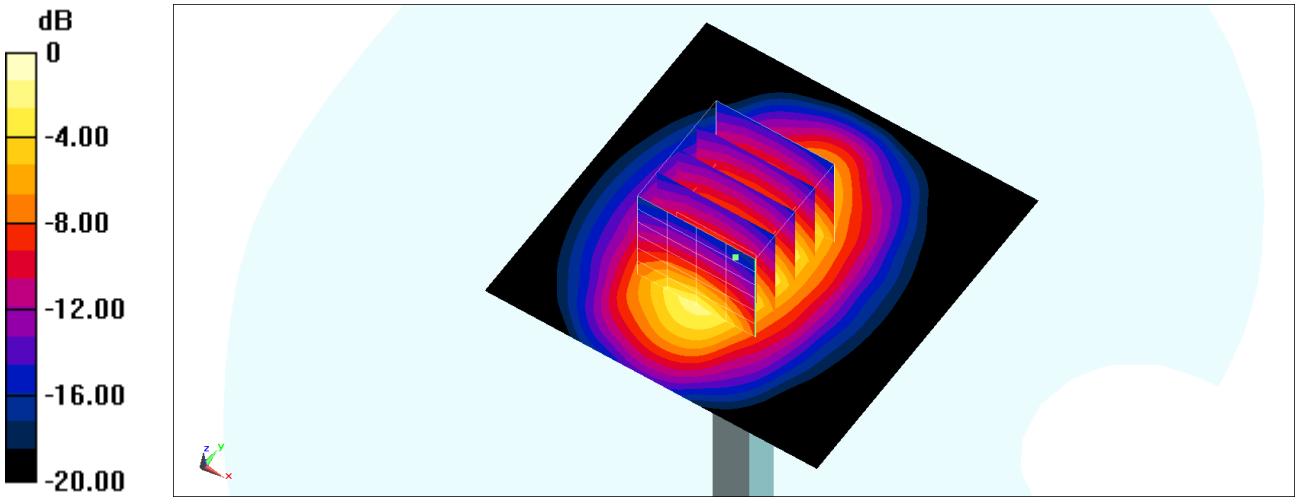

0 dB = 11.2 W/kg = 10.49 dBW/kg

System Check_Head_1750MHz

DUT: D1750V2-1112

Communication System: CW; Frequency: 1750 MHz;Duty Cycle: 1:1
Medium: HSL_1750_200203 Medium parameters used: f = 1750 MHz; σ = 1.352 S/m; ε_r = 39.084; ρ = 1000 kg/m^3
Ambient Temperature：23.5 ℃; Liquid Temperature：22.5 ℃

DASY5 Configuration:
- Probe: ES3DV3 - SN3184; ConvF(5.45, 5.45, 5.45) @ 1750 MHz; Calibrated: 2019/9/25
- Sensor-Surface: 3mm (Mechanical Surface Detection)
- Electronics: DAE4 Sn1305; Calibrated: 2019/4/30
- Phantom: SAM_Left; Type: QD000P40CD; Serial: TP:1684
- Measurement SW: DASY52, Version 52.10 (2);SEMCAD X Version 14.6.12 (7470)

Pin=250mW/Area Scan (61x61x1): Interpolated grid: dx=1.500 mm, dy=1.500 mm
Maximum value of SAR (interpolated) = 11.3 W/kg

Pin=250mW/Zoom Scan (5x5x7)/Cube 0: Measurement grid: dx=8mm, dy=8mm, dz=5mm
Reference Value = 89.35 V/m; Power Drift = 0.02 dB
Peak SAR (extrapolated) = 15.6 W/kg
SAR(1 g) = 8.7 W/kg; SAR(10 g) = 4.63 W/kg
Maximum value of SAR (measured) = 10.9 W/kg

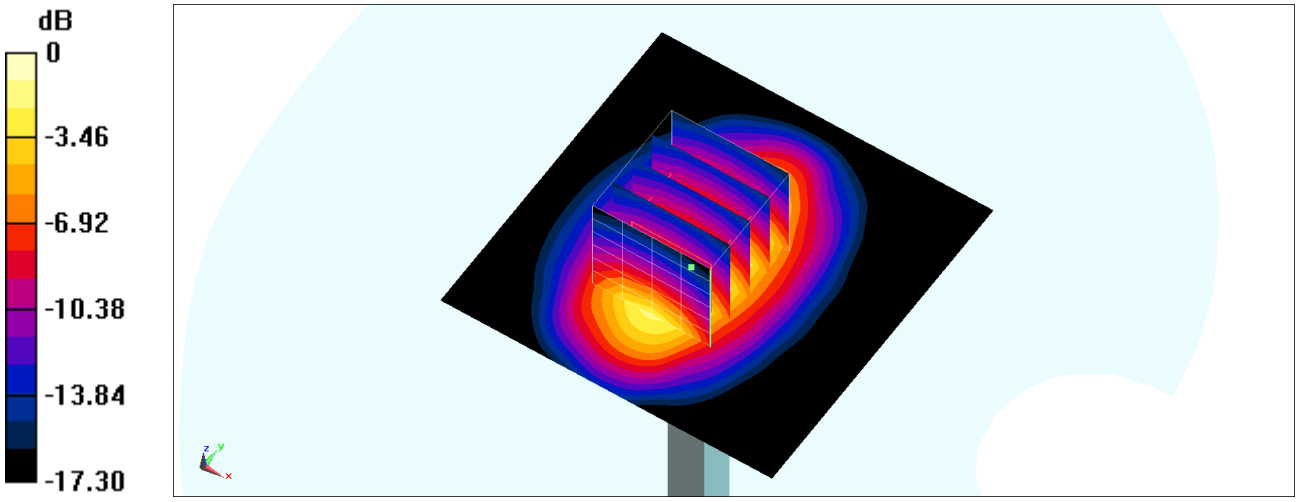

0 dB = 10.9 W/kg = 10.37 dBW/kg

System Check_Head_1750MHz

DUT: D1750V2-1112

Communication System: CW; Frequency: 1750 MHz;Duty Cycle: 1:1
Medium: HSL_1750_200215 Medium parameters used: f = 1750 MHz; σ = 1.378 S/m; ε_r = 39.676; ρ = 1000 kg/m^3
Ambient Temperature：23.3 ℃; Liquid Temperature：22.3 ℃

DASY5 Configuration:
- Probe: EX3DV4 - SN7346; ConvF(8.5, 8.5, 8.5) @ 1750 MHz; Calibrated: 2019/4/25
- Sensor-Surface: 1.4mm (Mechanical Surface Detection)
- Electronics: DAE4 Sn853; Calibrated: 2019/7/18
- Phantom: SAM_Left; Type: QD000P40CD; Serial: TP:1477
- Measurement SW: DASY52, Version 52.10 (2);SEMCAD X Version 14.6.12 (7470)

Pin=250mW/Area Scan (61x61x1): Interpolated grid: dx=1.500 mm, dy=1.500 mm
Maximum value of SAR (interpolated) = 14.1 W/kg

Pin=250mW/Zoom Scan (5x5x7)/Cube 0: Measurement grid: dx=8mm, dy=8mm, dz=5mm
Reference Value = 102.3 V/m; Power Drift = 0.14 dB
Peak SAR (extrapolated) = 17.1 W/kg
SAR(1 g) = 9.13 W/kg; SAR(10 g) = 4.81 W/kg
Maximum value of SAR (measured) = 14.3 W/kg

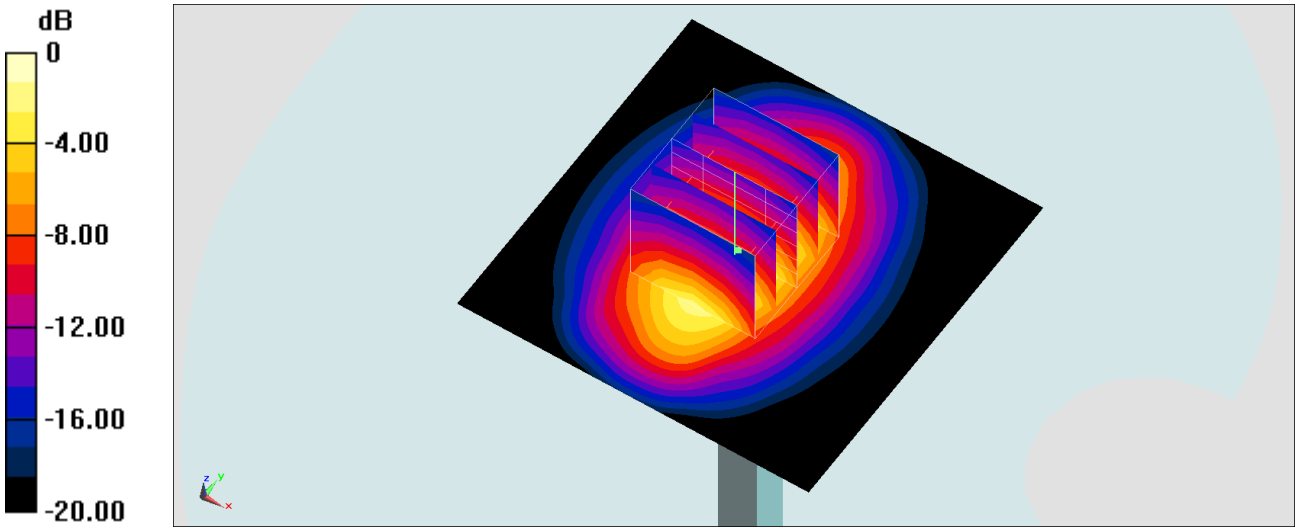

0 dB = 14.3 W/kg = 11.55 dBW/kg

System Check_Head_1750MHz

DUT: D1750V2-1112

Communication System: CW; Frequency: 1750 MHz;Duty Cycle: 1:1
Medium: HSL_1750_200218 Medium parameters used: f = 1750 MHz; σ = 1.342 S/m; ε_r = 41.788; ρ = 1000 kg/m^3
Ambient Temperature：23.7 ℃; Liquid Temperature：22.7 ℃

DASY5 Configuration:
- Probe: ES3DV3 - SN3184; ConvF(5.45, 5.45, 5.45) @ 1750 MHz; Calibrated: 2019/9/25
- Sensor-Surface: 3mm (Mechanical Surface Detection)
- Electronics: DAE4 Sn1305; Calibrated: 2019/4/30
- Phantom: SAM_Left; Type: QD000P40CD; Serial: TP:1684
- Measurement SW: DASY52, Version 52.10 (2);SEMCAD X Version 14.6.12 (7470)

Pin=250mW/Area Scan (61x61x1): Interpolated grid: dx=1.500 mm, dy=1.500 mm
Maximum value of SAR (interpolated) = 11.2 W/kg

Pin=250mW/Zoom Scan (5x5x7)/Cube 0: Measurement grid: dx=8mm, dy=8mm, dz=5mm
Reference Value = 89.35 V/m; Power Drift = 0.16 dB
Peak SAR (extrapolated) = 15.5 W/kg
SAR(1 g) = 8.64 W/kg; SAR(10 g) = 4.59 W/kg
Maximum value of SAR (measured) = 10.9 W/kg

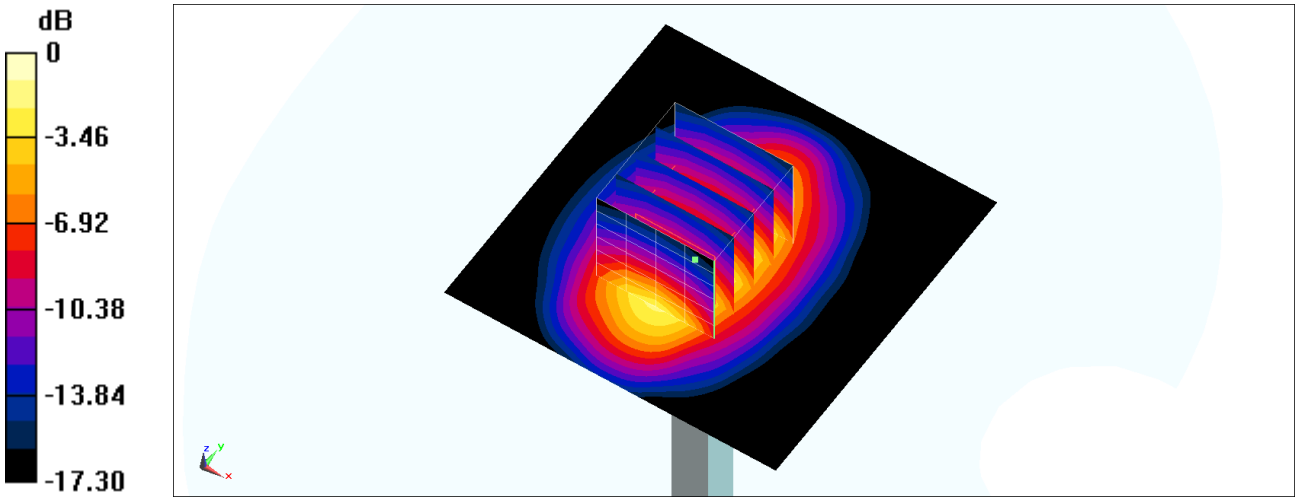

0 dB = 10.9 W/kg = 10.37 dBW/kg

System Check_Head_1750MHz

DUT: D1750V2-1112

Communication System: CW; Frequency: 1750 MHz;Duty Cycle: 1:1
Medium: HSL_1750_200220 Medium parameters used: f = 1750 MHz; σ = 1.368 S/m; ε_r = 41.289; ρ = 1000 kg/m^3
Ambient Temperature：23.8 ℃; Liquid Temperature：22.8 ℃

DASY5 Configuration:
- Probe: EX3DV4 - SN7346; ConvF(8.5, 8.5, 8.5) @ 1750 MHz; Calibrated: 2019/4/25
- Sensor-Surface: 1.4mm (Mechanical Surface Detection)
- Electronics: DAE4 Sn853; Calibrated: 2019/7/18
- Phantom: SAM_Left; Type: QD000P40CD; Serial: TP:1477
- Measurement SW: DASY52, Version 52.10 (2);SEMCAD X Version 14.6.12 (7470)

Pin=250mW/Area Scan (61x61x1): Interpolated grid: dx=1.500 mm, dy=1.500 mm
Maximum value of SAR (interpolated) = 14.9 W/kg

Pin=250mW/Zoom Scan (5x5x7)/Cube 0: Measurement grid: dx=8mm, dy=8mm, dz=5mm
Reference Value = 107.8 V/m; Power Drift = -0.06 dB
Peak SAR (extrapolated) = 18.0 W/kg
SAR(1 g) = 9.61 W/kg; SAR(10 g) = 5.06 W/kg
Maximum value of SAR (measured) = 14.9 W/kg

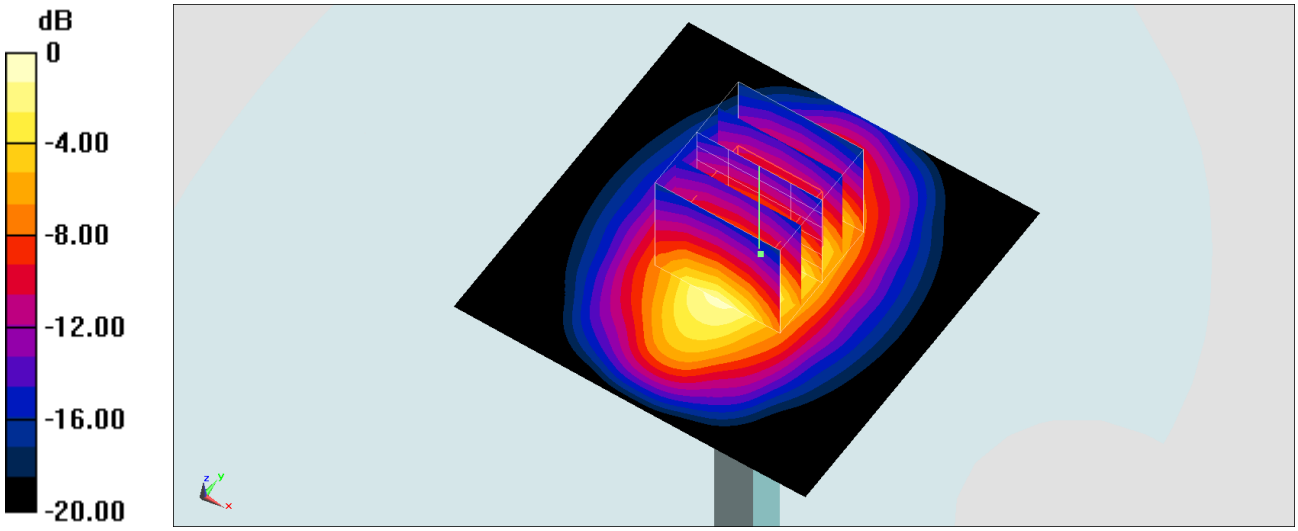

0 dB = 14.9 W/kg = 11.73 dBW/kg

System Check_Head_1750MHz

DUT: D1750V2-1068

Communication System: CW; Frequency: 1750 MHz;Duty Cycle: 1:1
Medium: HSL_1750_200225 Medium parameters used: f = 1750 MHz; σ = 1.374 S/m; ε_r = 40.963; ρ = 1000 kg/m^3
Ambient Temperature：23.5 ℃; Liquid Temperature：22.5 ℃

DASY5 Configuration:
- Probe: EX3DV4 - SN7346; ConvF(8.5, 8.5, 8.5) @ 1750 MHz; Calibrated: 2019/4/25
- Sensor-Surface: 1.4mm (Mechanical Surface Detection)
- Electronics: DAE4 Sn853; Calibrated: 2019/7/18
- Phantom: SAM_Left; Type: QD000P40CD; Serial: TP:1477
- Measurement SW: DASY52, Version 52.10 (2);SEMCAD X Version 14.6.12 (7470)

Pin=250mW/Area Scan (61x61x1): Interpolated grid: dx=1.500 mm, dy=1.500 mm
Maximum value of SAR (interpolated) = 14.8 W/kg

Pin=250mW/Zoom Scan (5x5x7)/Cube 0: Measurement grid: dx=8mm, dy=8mm, dz=5mm
Reference Value = 101.7 V/m; Power Drift = -0.17 dB
Peak SAR (extrapolated) = 15.9 W/kg
SAR(1 g) = 8.9 W/kg; SAR(10 g) = 4.79 W/kg
Maximum value of SAR (measured) = 13.5 W/kg

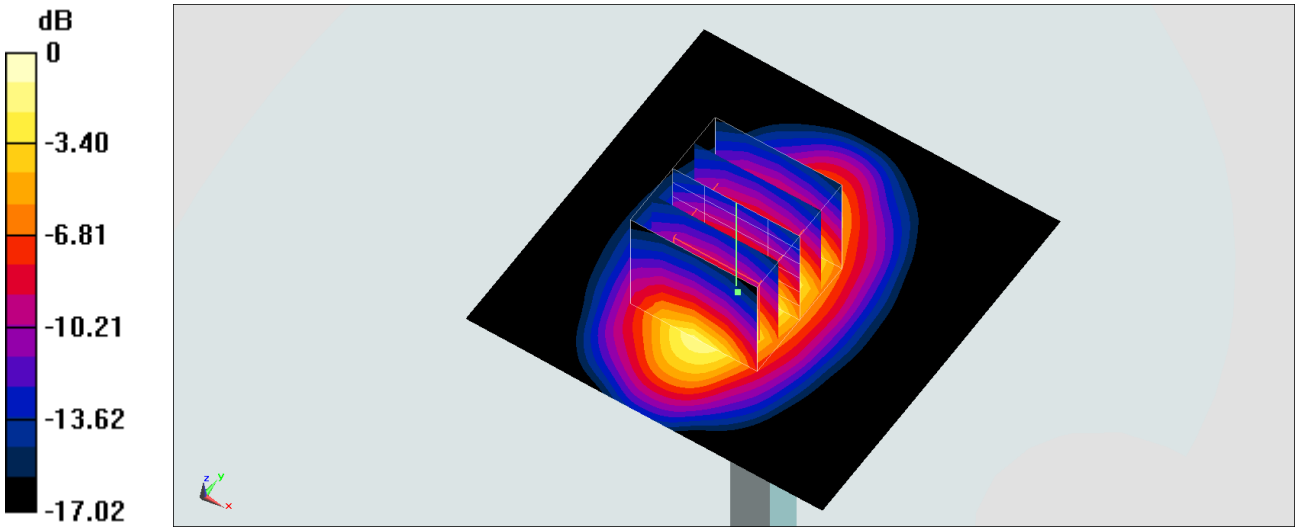

0 dB = 13.5 W/kg = 11.30 dBW/kg

System Check_Head_1750MHz

DUT: D1750V2-1112

Communication System: CW; Frequency: 1750 MHz;Duty Cycle: 1:1
Medium: HSL_1750_200226 Medium parameters used: f = 1750 MHz; σ = 1.366 S/m; ε_r = 39.717; ρ = 1000 kg/m^3
Ambient Temperature：23.5 ℃; Liquid Temperature：22.5 ℃

DASY5 Configuration:
- Probe: EX3DV4 - SN7346; ConvF(8.5, 8.5, 8.5) @ 1750 MHz; Calibrated: 2019/4/25
- Sensor-Surface: 1.4mm (Mechanical Surface Detection)
- Electronics: DAE4 Sn853; Calibrated: 2019/7/18
- Phantom: SAM_Left; Type: QD000P40CD; Serial: TP:1477
- Measurement SW: DASY52, Version 52.10 (2);SEMCAD X Version 14.6.12 (7470)

Pin=250mW/Area Scan (61x61x1): Interpolated grid: dx=1.500 mm, dy=1.500 mm
Maximum value of SAR (interpolated) = 15.2 W/kg

Pin=250mW/Zoom Scan (5x5x7)/Cube 0: Measurement grid: dx=8mm, dy=8mm, dz=5mm
Reference Value = 104.9 V/m; Power Drift = -0.07 dB
Peak SAR (extrapolated) = 18.4 W/kg
SAR(1 g) = 8.77 W/kg; SAR(10 g) = 4.49 W/kg
Maximum value of SAR (measured) = 14.4 W/kg

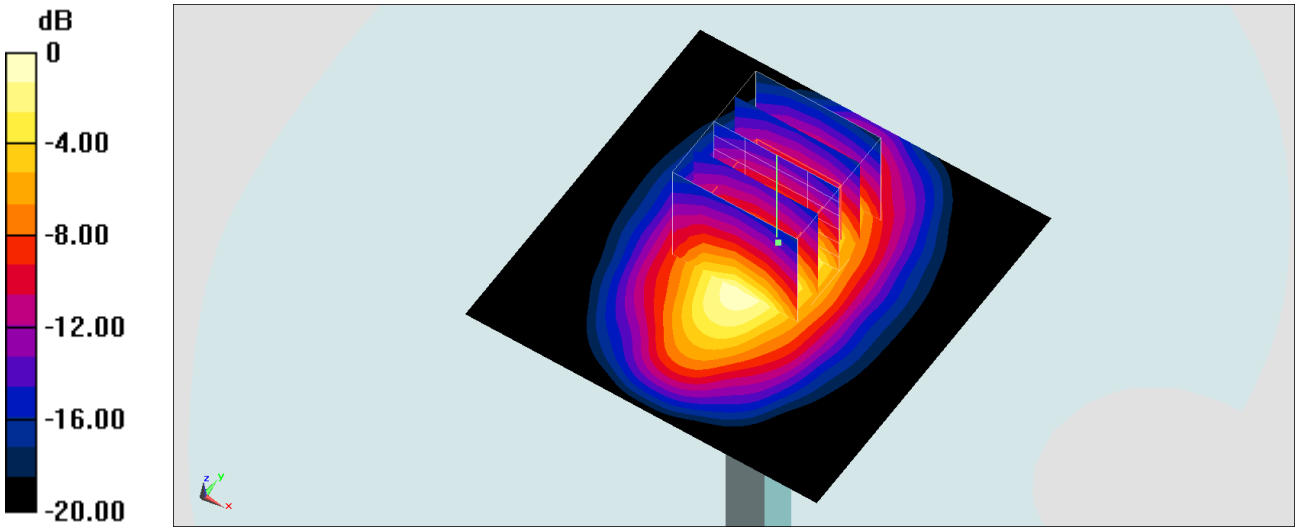

0 dB = 14.4 W/kg = 11.58 dBW/kg

System Check_Head_1750MHz

DUT: D1750V2-1112

Communication System: CW; Frequency: 1750 MHz;Duty Cycle: 1:1
Medium: HSL_1750_200227 Medium parameters used: f = 1750 MHz; σ = 1.368 S/m; ε_r = 41.289; ρ = 1000 kg/m^3
Ambient Temperature：23.4 ℃; Liquid Temperature：22.4 ℃

DASY5 Configuration:
- Probe: EX3DV4 - SN7346; ConvF(8.5, 8.5, 8.5) @ 1750 MHz; Calibrated: 2019/4/25
- Sensor-Surface: 1.4mm (Mechanical Surface Detection)
- Electronics: DAE4 Sn853; Calibrated: 2019/7/18
- Phantom: SAM_Left; Type: QD000P40CD; Serial: TP:1477
- Measurement SW: DASY52, Version 52.10 (2);SEMCAD X Version 14.6.12 (7470)

Pin=250mW/Area Scan (61x61x1): Interpolated grid: dx=1.500 mm, dy=1.500 mm
Maximum value of SAR (interpolated) = 15.3 W/kg

Pin=250mW/Zoom Scan (5x5x7)/Cube 0: Measurement grid: dx=8mm, dy=8mm, dz=5mm
Reference Value = 103.9 V/m; Power Drift = 0.02 dB
Peak SAR (extrapolated) = 18.2 W/kg
SAR(1 g) = 8.75 W/kg; SAR(10 g) = 4.51 W/kg
Maximum value of SAR (measured) = 14.1 W/kg

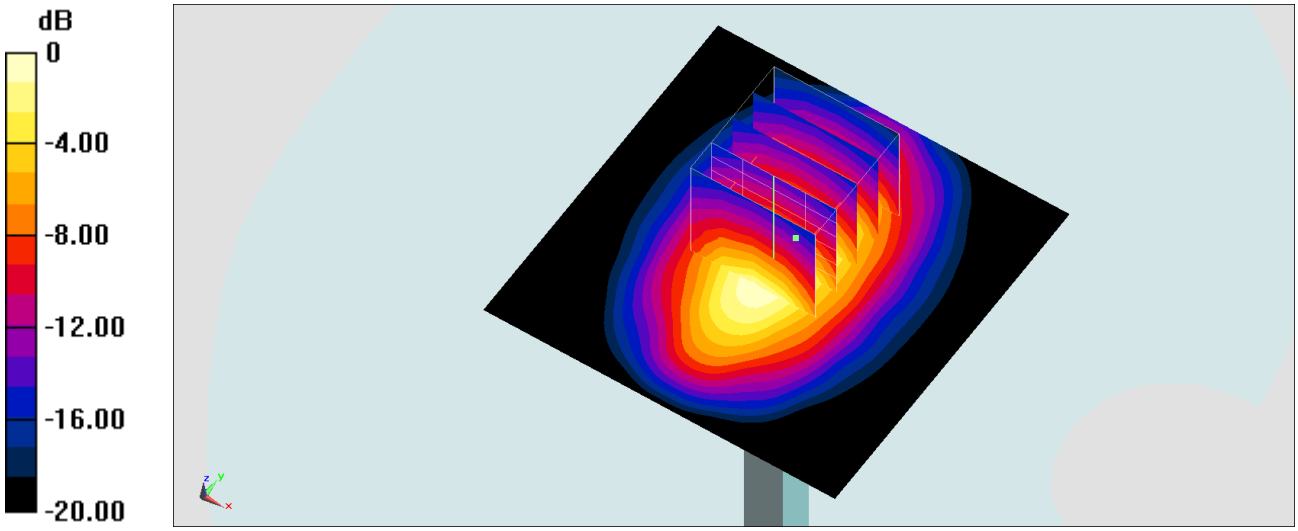

0 dB = 14.1 W/kg = 11.49 dBW/kg

System Check_Head_1900MHz

DUT: D1900V2-5d041

Communication System: CW; Frequency: 1900 MHz;Duty Cycle: 1:1
Medium: HSL_1900_200118 Medium parameters used: f = 1900 MHz; σ = 1.421 S/m; ε_r = 40.82; ρ = 1000 kg/m^3
Ambient Temperature：23.3 ℃; Liquid Temperature：22.3 ℃

DASY5 Configuration:
- Probe: ES3DV3 - SN3184; ConvF(5.23, 5.23, 5.23) @ 1900 MHz; Calibrated: 2019/9/25
- Sensor-Surface: 3mm (Mechanical Surface Detection)
- Electronics: DAE4 Sn1305; Calibrated: 2019/4/30
- Phantom: SAM_Left; Type: QD000P40CD; Serial: TP:1684
- Measurement SW: DASY52, Version 52.10 (2);SEMCAD X Version 14.6.12 (7470)

Pin=250mW/Area Scan (61x61x1): Interpolated grid: dx=1.500 mm, dy=1.500 mm
Maximum value of SAR (interpolated) = 13.5 W/kg

Pin=250mW/Zoom Scan (5x5x7)/Cube 0: Measurement grid: dx=8mm, dy=8mm, dz=5mm
Reference Value = 88.37 V/m; Power Drift = -0.11 dB
Peak SAR (extrapolated) = 16.2 W/kg
SAR(1 g) = 9.65 W/kg; SAR(10 g) = 5.15 W/kg
Maximum value of SAR (measured) = 11.0 W/kg

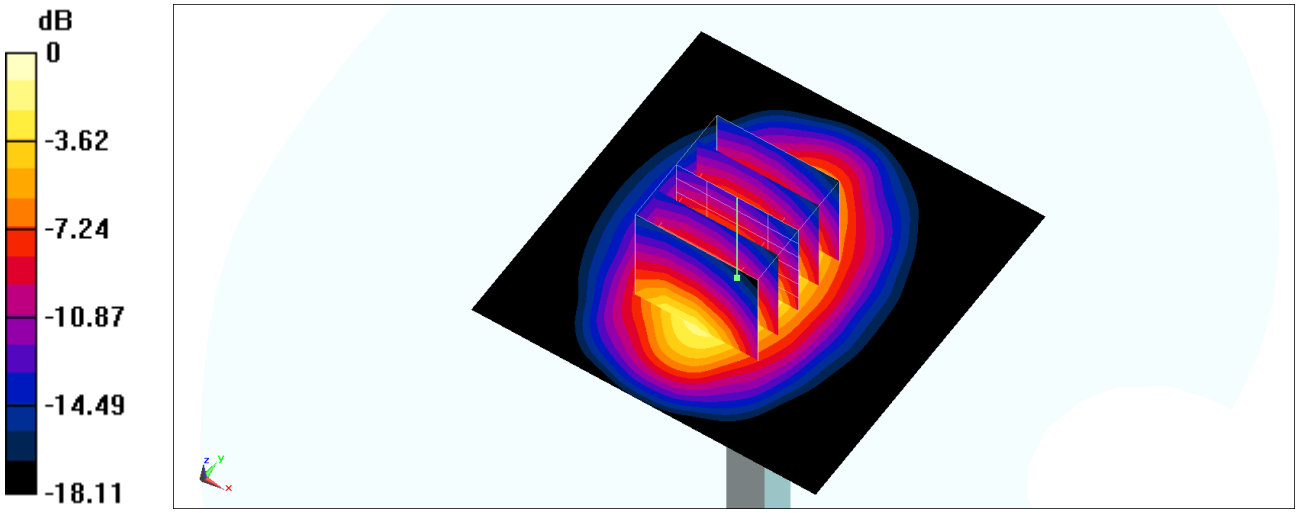

0 dB = 11.0 W/kg = 10.41 dBW/kg

System Check_Head_1900MHz

DUT: D1900V2-5d041

Communication System: CW; Frequency: 1900 MHz;Duty Cycle: 1:1
Medium: HSL_1900_200124 Medium parameters used: f = 1900 MHz; σ = 1.43 S/m; ε_r = 40.051; ρ = 1000 kg/m^3
Ambient Temperature：23.7 ℃; Liquid Temperature：22.7 ℃

DASY5 Configuration:
- Probe: ES3DV3 - SN3184; ConvF(5.23, 5.23, 5.23) @ 1900 MHz; Calibrated: 2019/9/25
- Sensor-Surface: 3mm (Mechanical Surface Detection)
- Electronics: DAE4 Sn1305; Calibrated: 2019/4/30
- Phantom: SAM_Left; Type: QD000P40CD; Serial: TP:1684
- Measurement SW: DASY52, Version 52.10 (2);SEMCAD X Version 14.6.12 (7470)

Pin=250mW/Area Scan (61x61x1): Interpolated grid: dx=1.500 mm, dy=1.500 mm
Maximum value of SAR (interpolated) = 13.8 W/kg

Pin=250mW/Zoom Scan (5x5x7)/Cube 0: Measurement grid: dx=8mm, dy=8mm, dz=5mm
Reference Value = 98.34 V/m; Power Drift = -0.09 dB
Peak SAR (extrapolated) = 19.1 W/kg
SAR(1 g) = 10.4 W/kg; SAR(10 g) = 5.36 W/kg
Maximum value of SAR (measured) = 13.3 W/kg

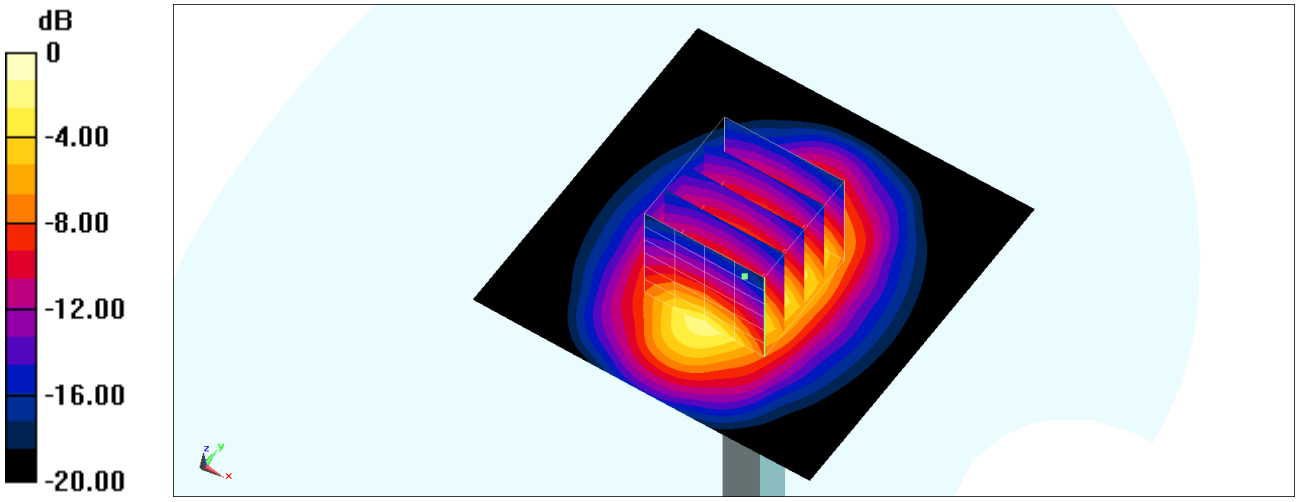

0 dB = 13.3 W/kg = 11.24 dBW/kg

System Check_Head_1900MHz

DUT: D1900V2-5d041

Communication System: CW; Frequency: 1900 MHz;Duty Cycle: 1:1
Medium: HSL_1900_200202 Medium parameters used: f = 1900 MHz; σ = 1.408 S/m; ε_r = 40.353; ρ = 1000 kg/m^3
Ambient Temperature：23.5 ℃; Liquid Temperature：22.5 ℃

DASY5 Configuration:
- Probe: ES3DV3 - SN3184; ConvF(5.23, 5.23, 5.23) @ 1900 MHz; Calibrated: 2019/9/25
- Sensor-Surface: 3mm (Mechanical Surface Detection)
- Electronics: DAE4 Sn1305; Calibrated: 2019/4/30
- Phantom: SAM_Left; Type: QD000P40CD; Serial: TP:1684
- Measurement SW: DASY52, Version 52.10 (2);SEMCAD X Version 14.6.12 (7470)

Pin=250mW/Area Scan (61x61x1): Interpolated grid: dx=1.500 mm, dy=1.500 mm
Maximum value of SAR (interpolated) = 13.6 W/kg

Pin=250mW/Zoom Scan (5x5x7)/Cube 0: Measurement grid: dx=8mm, dy=8mm, dz=5mm
Reference Value = 98.34 V/m; Power Drift = -0.02 dB
Peak SAR (extrapolated) = 18.8 W/kg
SAR(1 g) = 10.2 W/kg; SAR(10 g) = 5.27 W/kg
Maximum value of SAR (measured) = 13.1 W/kg

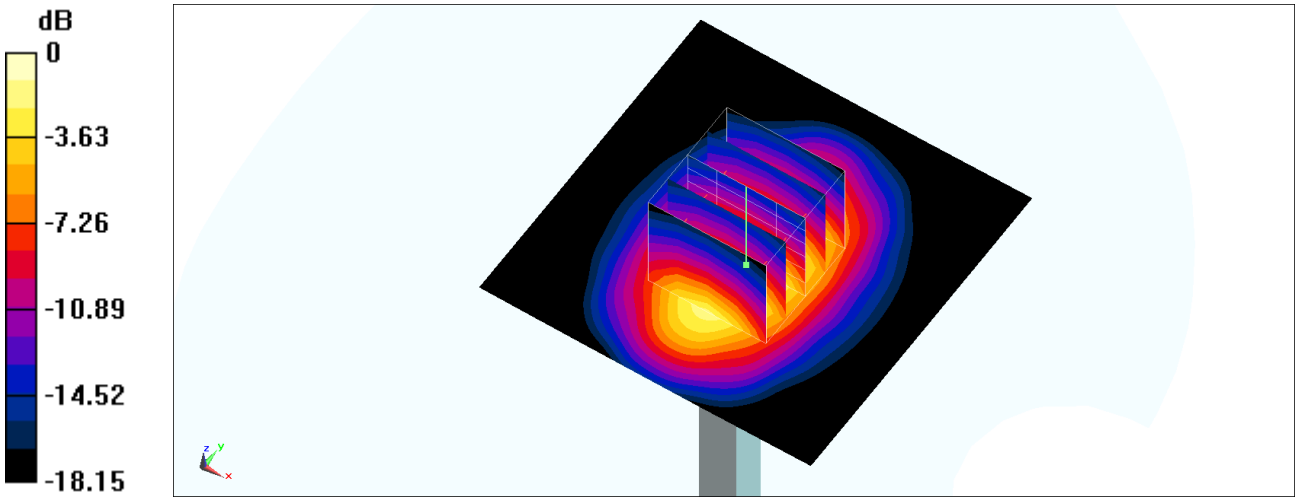

0 dB = 13.1 W/kg = 11.17 dBW/kg

System Check_Head_1900MHz

DUT: D1900V2-5d041

Communication System: CW; Frequency: 1900 MHz;Duty Cycle: 1:1
Medium: HSL_1900_200211 Medium parameters used: f = 1900 MHz; σ = 1.419 S/m; ε_r = 40.441; ρ = 1000 kg/m^3
Ambient Temperature：23.4 ℃; Liquid Temperature：22.4 ℃

DASY5 Configuration:
- Probe: EX3DV4 - SN7346; ConvF(8.07, 8.07, 8.07) @ 1900 MHz; Calibrated: 2019/4/25
- Sensor-Surface: 1.4mm (Mechanical Surface Detection)
- Electronics: DAE4 Sn853; Calibrated: 2019/7/18
- Phantom: SAM_Left; Type: QD000P40CD; Serial: TP:1477
- Measurement SW: DASY52, Version 52.10 (2);SEMCAD X Version 14.6.12 (7470)

Pin=250mW/Area Scan (61x61x1): Interpolated grid: dx=1.500 mm, dy=1.500 mm
Maximum value of SAR (interpolated) = 15.5 W/kg

Pin=250mW/Zoom Scan (5x5x7)/Cube 0: Measurement grid: dx=8mm, dy=8mm, dz=5mm
Reference Value = 106.3 V/m; Power Drift = -0.09 dB
Peak SAR (extrapolated) = 17.6 W/kg
SAR(1 g) = 9.38 W/kg; SAR(10 g) = 4.88 W/kg
Maximum value of SAR (measured) = 14.5 W/kg

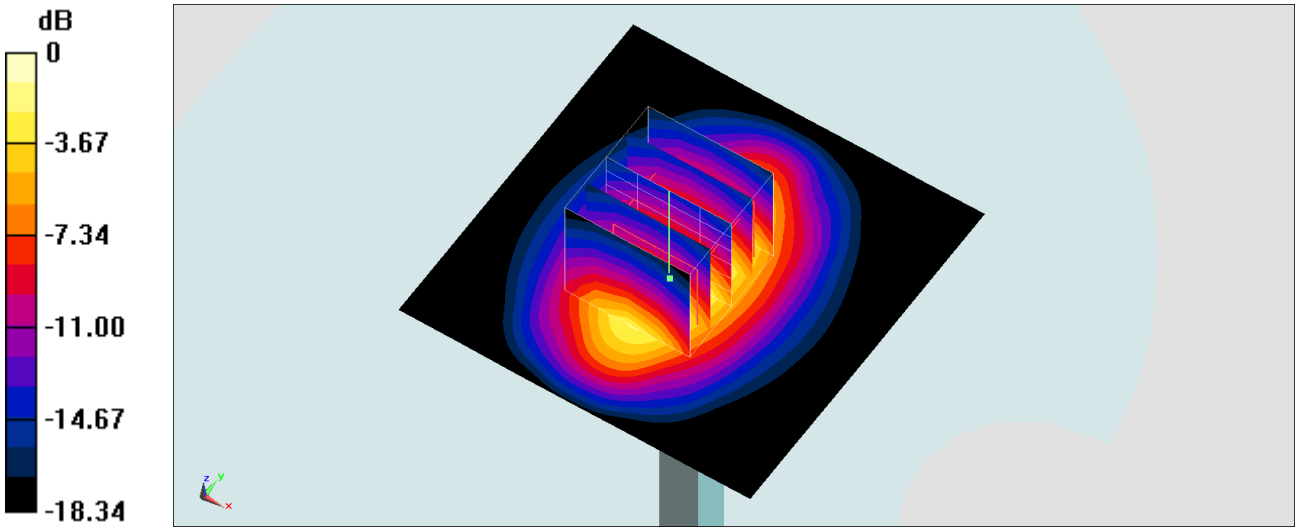

0 dB = 14.5 W/kg = 11.61 dBW/kg

System Check_Head_1900MHz

DUT: D1900V2-5d041

Communication System: CW; Frequency: 1900 MHz;Duty Cycle: 1:1
Medium: HSL_1900_200216 Medium parameters used: f = 1900 MHz; σ = 1.419 S/m; ε_r = 40.831; ρ = 1000 kg/m^3
Ambient Temperature：23.6 ℃; Liquid Temperature：22.6 ℃

DASY5 Configuration:
- Probe: EX3DV4 - SN7346; ConvF(8.07, 8.07, 8.07) @ 1900 MHz; Calibrated: 2019/4/25
- Sensor-Surface: 1.4mm (Mechanical Surface Detection)
- Electronics: DAE4 Sn853; Calibrated: 2019/7/18
- Phantom: SAM_Left; Type: QD000P40CD; Serial: TP:1477
- Measurement SW: DASY52, Version 52.10 (2);SEMCAD X Version 14.6.12 (7470)

Pin=250mW/Area Scan (61x61x1): Interpolated grid: dx=1.500 mm, dy=1.500 mm
Maximum value of SAR (interpolated) = 16.4 W/kg

Pin=250mW/Zoom Scan (5x5x7)/Cube 0: Measurement grid: dx=8mm, dy=8mm, dz=5mm
Reference Value = 109.6 V/m; Power Drift = -0.09 dB
Peak SAR (extrapolated) = 19.9 W/kg
SAR(1 g) = 10.5 W/kg; SAR(10 g) = 5.41 W/kg
Maximum value of SAR (measured) = 16.6 W/kg

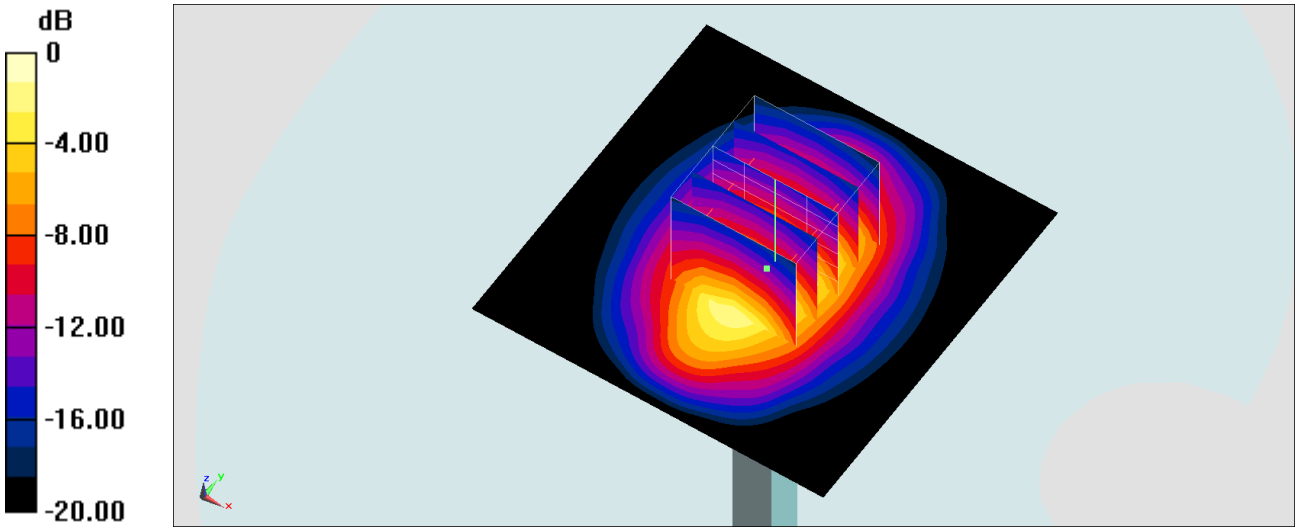

0 dB = 16.6 W/kg = 12.20 dBW/kg

System Check_Head_1900MHz

DUT: D1900V2-5d041

Communication System: CW; Frequency: 1900 MHz;Duty Cycle: 1:1
Medium: HSL_1900_200218 Medium parameters used: f = 1900 MHz; σ = 1.352 S/m; ε_r = 40.019; ρ = 1000 kg/m^3
Ambient Temperature：23.7 ℃; Liquid Temperature：22.7 ℃

DASY5 Configuration:
- Probe: ES3DV3 - SN3184; ConvF(5.23, 5.23, 5.23) @ 1900 MHz; Calibrated: 2019/9/25
- Sensor-Surface: 3mm (Mechanical Surface Detection)
- Electronics: DAE4 Sn1305; Calibrated: 2019/4/30
- Phantom: SAM_Left; Type: QD000P40CD; Serial: TP:1684
- Measurement SW: DASY52, Version 52.10 (2);SEMCAD X Version 14.6.12 (7470)

Pin=250mW/Area Scan (61x61x1): Interpolated grid: dx=1.500 mm, dy=1.500 mm
Maximum value of SAR (interpolated) = 12.9 W/kg

Pin=250mW/Zoom Scan (5x5x7)/Cube 0: Measurement grid: dx=8mm, dy=8mm, dz=5mm
Reference Value = 88.37 V/m; Power Drift = -0.04 dB
Peak SAR (extrapolated) = 15.4 W/kg
SAR(1 g) = 9.18 W/kg; SAR(10 g) = 4.9 W/kg
Maximum value of SAR (measured) = 10.4 W/kg

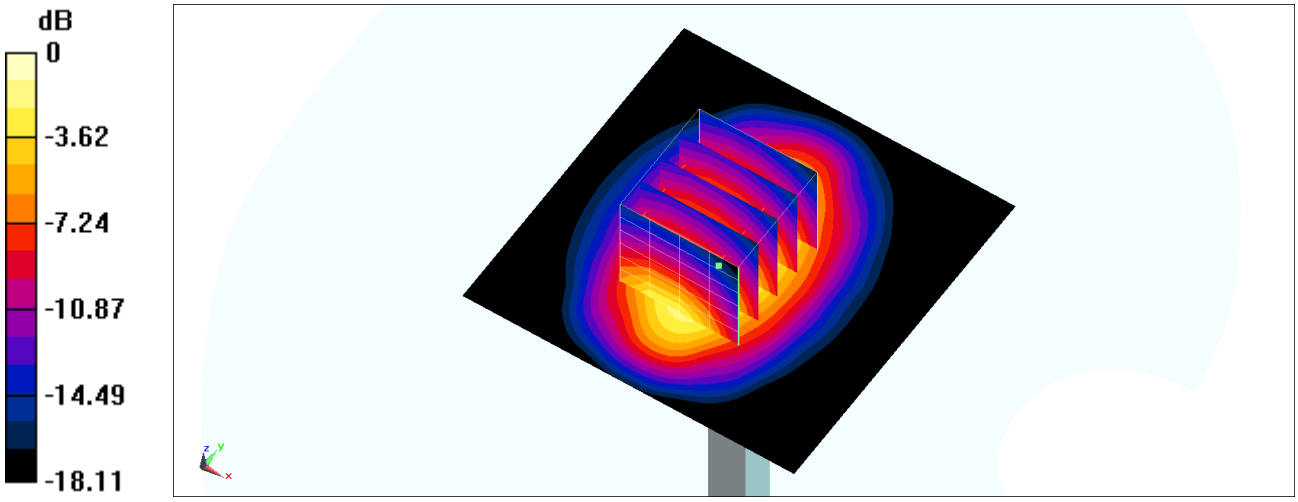

0 dB = 10.4 W/kg = 10.17 dBW/kg

System Check_Head_1900MHz

DUT: D1900V2-5d041

Communication System: CW; Frequency: 1900 MHz;Duty Cycle: 1:1
Medium: HSL_1900_200219 Medium parameters used: f = 1900 MHz; σ = 1.459 S/m; ε_r = 40.235; ρ = 1000 kg/m^3
Ambient Temperature：23.6 ℃; Liquid Temperature：22.6 ℃

DASY5 Configuration:
- Probe: EX3DV4 - SN7346; ConvF(8.07, 8.07, 8.07) @ 1900 MHz; Calibrated: 2019/4/25
- Sensor-Surface: 1.4mm (Mechanical Surface Detection)
- Electronics: DAE4 Sn853; Calibrated: 2019/7/18
- Phantom: SAM_Left; Type: QD000P40CD; Serial: TP:1477
- Measurement SW: DASY52, Version 52.10 (2);SEMCAD X Version 14.6.12 (7470)

Pin=250mW/Area Scan (61x61x1): Interpolated grid: dx=1.500 mm, dy=1.500 mm
Maximum value of SAR (interpolated) = 16.0 W/kg

Pin=250mW/Zoom Scan (5x5x7)/Cube 0: Measurement grid: dx=8mm, dy=8mm, dz=5mm
Reference Value = 106.3 V/m; Power Drift = -0.12 dB
Peak SAR (extrapolated) = 18.2 W/kg
SAR(1 g) = 9.65 W/kg; SAR(10 g) = 5.02 W/kg
Maximum value of SAR (measured) = 14.9 W/kg

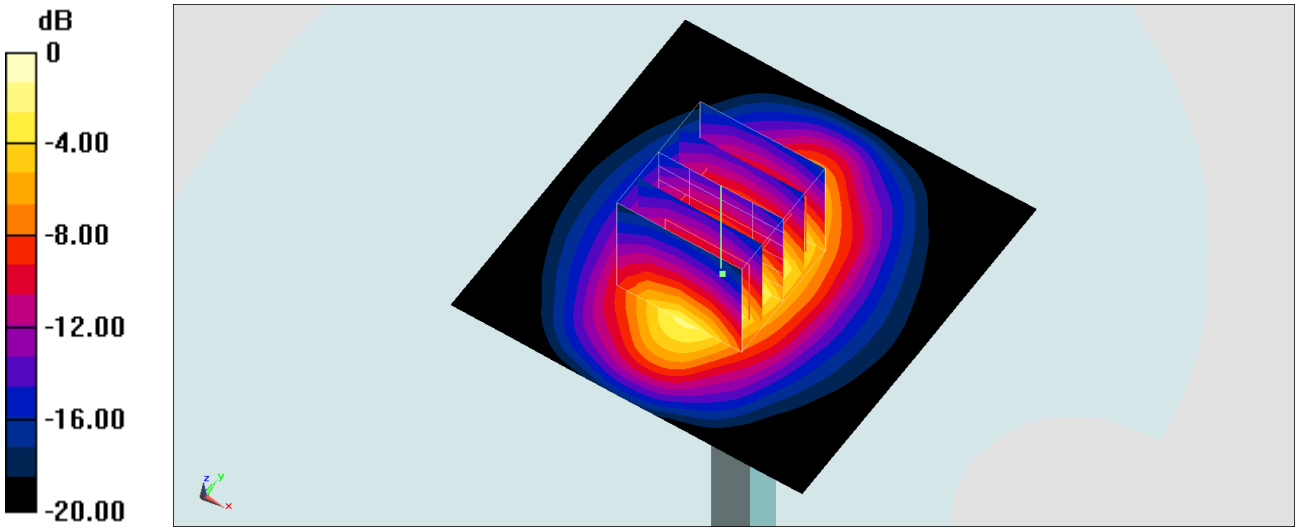

0 dB = 14.9 W/kg = 11.73 dBW/kg

System Check_Head_1900MHz

DUT: D1900V2-5d041

Communication System: CW; Frequency: 1900 MHz;Duty Cycle: 1:1
Medium: HSL_1900_200221 Medium parameters used: f = 1900 MHz; σ = 1.36 S/m; ε_r = 40.139; ρ = 1000 kg/m^3
Ambient Temperature：23.9 ℃; Liquid Temperature：22.9 ℃

DASY5 Configuration:
- Probe: ES3DV3 - SN3184; ConvF(5.23, 5.23, 5.23) @ 1900 MHz; Calibrated: 2019/9/25
- Sensor-Surface: 3mm (Mechanical Surface Detection)
- Electronics: DAE4 Sn1305; Calibrated: 2019/4/30
- Phantom: SAM_Left; Type: QD000P40CD; Serial: TP:1684
- Measurement SW: DASY52, Version 52.10 (2);SEMCAD X Version 14.6.12 (7470)

Pin=250mW/Area Scan (61x61x1): Interpolated grid: dx=1.500 mm, dy=1.500 mm
Maximum value of SAR (interpolated) = 12.9 W/kg

Pin=250mW/Zoom Scan (5x5x7)/Cube 0: Measurement grid: dx=8mm, dy=8mm, dz=5mm
Reference Value = 88.37 V/m; Power Drift = -0.09 dB
Peak SAR (extrapolated) = 15.5 W/kg
SAR(1 g) = 9.24 W/kg; SAR(10 g) = 4.93 W/kg
Maximum value of SAR (measured) = 10.5 W/kg

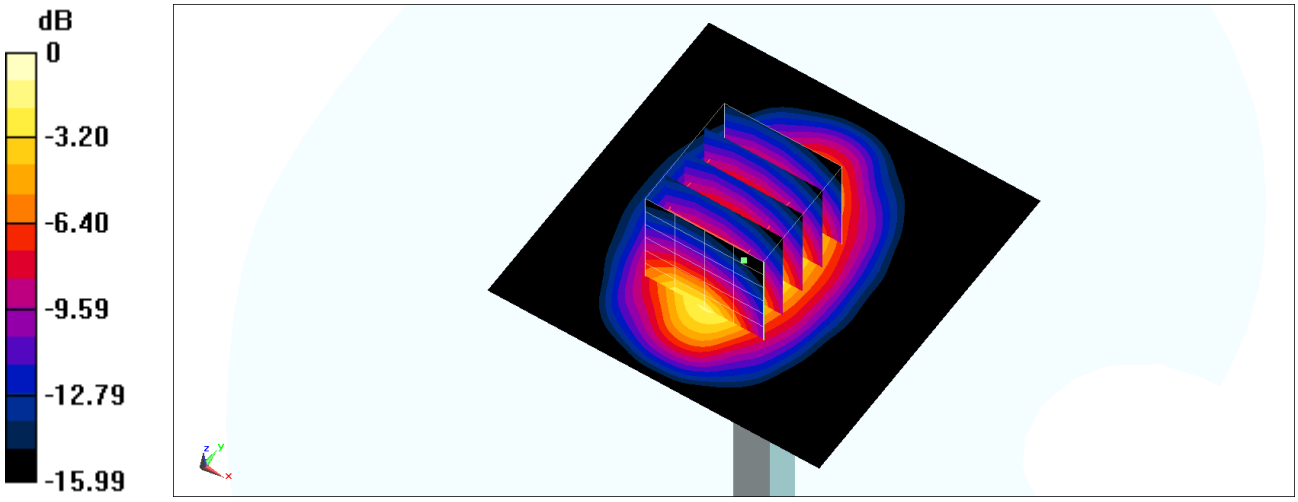

0 dB = 10.5 W/kg = 10.21 dBW/kg

System Check_Head_1900MHz

DUT: D1900V2-5d041

Communication System: CW; Frequency: 1900 MHz;Duty Cycle: 1:1
Medium: HSL_1900_200227 Medium parameters used: f = 1900 MHz; σ = 1.414 S/m; ε_r = 39.174; ρ = 1000 kg/m^3
Ambient Temperature：23.4 ℃; Liquid Temperature：22.4 ℃

DASY5 Configuration:
- Probe: EX3DV4 - SN7346; ConvF(8.07, 8.07, 8.07) @ 1900 MHz; Calibrated: 2019/4/25
- Sensor-Surface: 1.4mm (Mechanical Surface Detection)
- Electronics: DAE4 Sn853; Calibrated: 2019/7/18
- Phantom: SAM_Left; Type: QD000P40CD; Serial: TP:1477
- Measurement SW: DASY52, Version 52.10 (2);SEMCAD X Version 14.6.12 (7470)

Pin=250mW/Area Scan (61x61x1): Interpolated grid: dx=1.500 mm, dy=1.500 mm
Maximum value of SAR (interpolated) = 16.5 W/kg

Pin=250mW/Zoom Scan (5x5x7)/Cube 0: Measurement grid: dx=8mm, dy=8mm, dz=5mm
Reference Value = 109.5 V/m; Power Drift = -0.13 dB
Peak SAR (extrapolated) = 19.8 W/kg
SAR(1 g) = 10.2 W/kg; SAR(10 g) = 5.21 W/kg
Maximum value of SAR (measured) = 15.6 W/kg

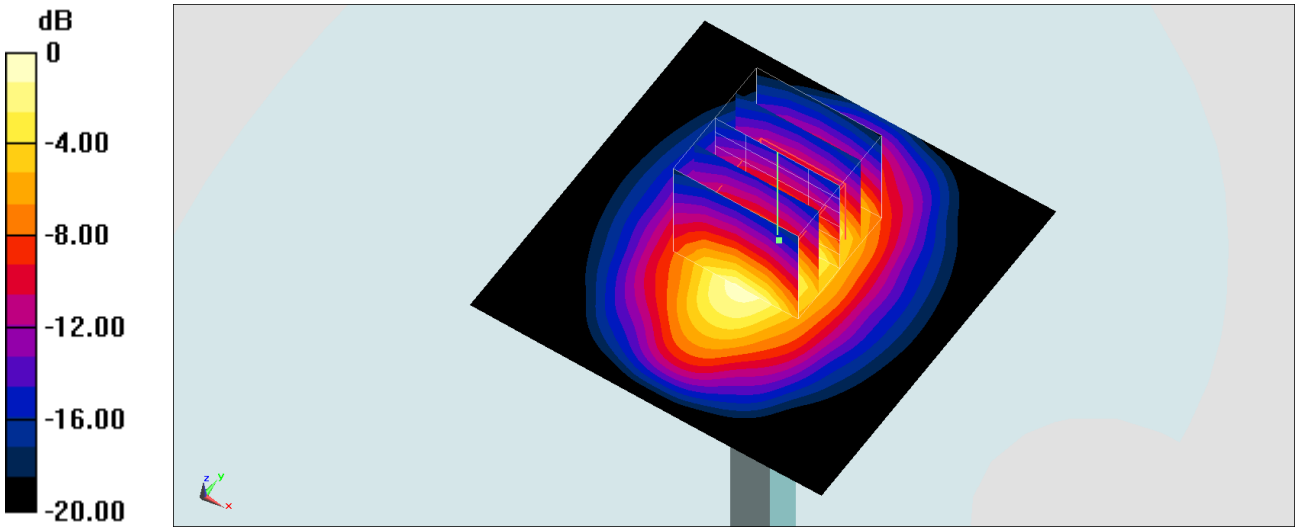

0 dB = 15.6 W/kg = 11.93 dBW/kg

System Check_Head_2300MHz

DUT: D2300V2-1006

Communication System: CW; Frequency: 2300 MHz;Duty Cycle: 1:1
Medium: HSL_2300_200125 Medium parameters used: f = 2300 MHz; σ = 1.607 S/m; ε_r = 39.401; ρ = 1000 kg/m^3
Ambient Temperature：23.5 ℃; Liquid Temperature：22.5 ℃

DASY5 Configuration:
- Probe: EX3DV4 - SN7346; ConvF(7.81, 7.81, 7.81) @ 2300 MHz; Calibrated: 2019/4/25
- Sensor-Surface: 1.4mm (Mechanical Surface Detection)
- Electronics: DAE4 Sn853; Calibrated: 2019/7/18
- Phantom: SAM_Left; Type: QD000P40CD; Serial: TP:1682
- Measurement SW: DASY52, Version 52.10 (2);SEMCAD X Version 14.6.12 (7470)

Pin=250mW/Area Scan (71x71x1): Interpolated grid: dx=1.200 mm, dy=1.200 mm
Maximum value of SAR (interpolated) = 17.6 W/kg

Pin=250mW/Zoom Scan (7x7x7)/Cube 0: Measurement grid: dx=5mm, dy=5mm, dz=5mm
Reference Value = 107.4 V/m; Power Drift = -0.07 dB
Peak SAR (extrapolated) = 21.2 W/kg
SAR(1 g) = 11.2 W/kg; SAR(10 g) = 5.42 W/kg
Maximum value of SAR (measured) = 17.6 W/kg

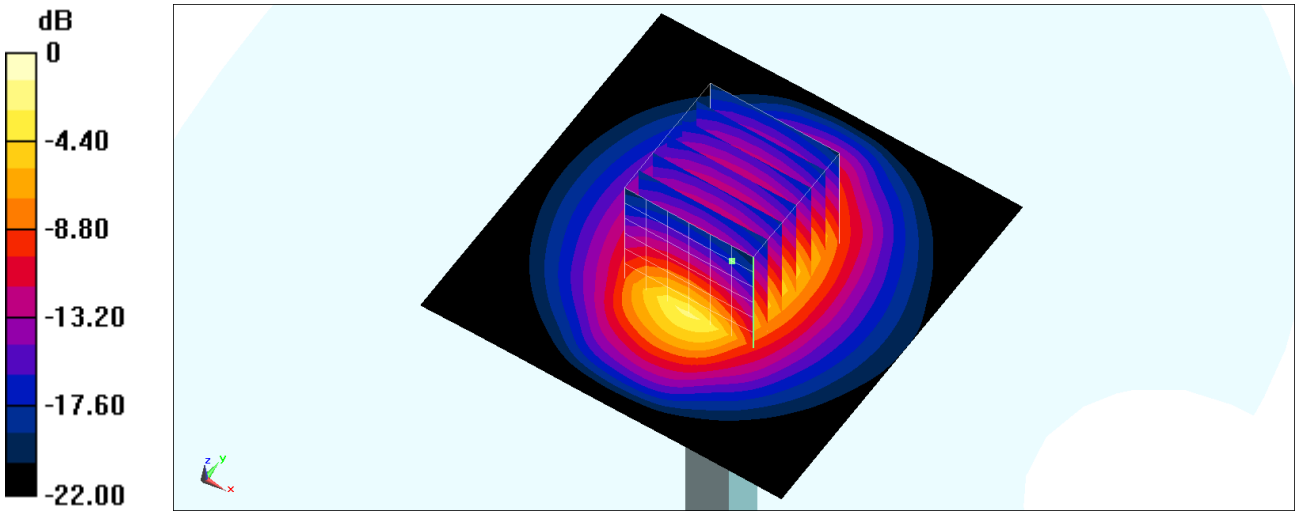

0 dB = 17.6 W/kg = 12.46 dBW/kg

System Check_Head_2300MHz

DUT: D2300V2-1006

Communication System: CW ; Frequency: 2300 MHz;Duty Cycle: 1:1
Medium: HSL_2300_200125 Medium parameters used: f = 2300 MHz; σ = 1.702 S/m; ε_r = 39.673; ρ = 1000 kg/m^3
Ambient Temperature：23.5 ℃; Liquid Temperature：22.5 ℃

DASY5 Configuration:
- Probe: ES3DV3 - SN3184; ConvF(4.96, 4.96, 4.96) @ 2300 MHz; Calibrated: 2019/9/25
- Sensor-Surface: 3mm (Mechanical Surface Detection)
- Electronics: DAE4 Sn1305; Calibrated: 2019/4/30
- Phantom: SAM_Left; Type: QD000P40CD; Serial: TP:1684
- Measurement SW: DASY52, Version 52.10 (2);SEMCAD X Version 14.6.12 (7470)

Pin=250mW/Area Scan (71x71x1): Interpolated grid: dx=1.200 mm, dy=1.200 mm
Maximum value of SAR (interpolated) = 15.7 W/kg

Pin=250mW/Zoom Scan (7x7x7)/Cube 0: Measurement grid: dx=5mm, dy=5mm, dz=5mm
Reference Value = 98.87 V/m; Power Drift = -0.09 dB
Peak SAR (extrapolated) = 22.3 W/kg
SAR(1 g) = 11.5 W/kg; SAR(10 g) = 5.57 W/kg
Maximum value of SAR (measured) = 15.0 W/kg

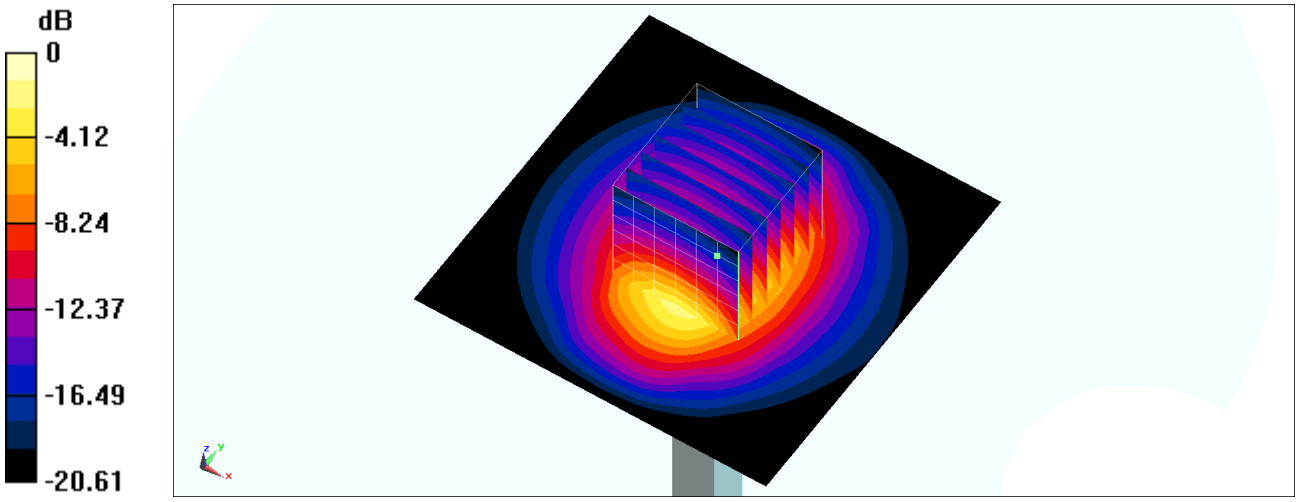

0 dB = 15.0 W/kg = 11.76 dBW/kg

System Check_Head_2300MHz

DUT: D2300V2-1006

Communication System: CW; Frequency: 2300 MHz;Duty Cycle: 1:1
Medium: HSL_2300_200214 Medium parameters used: f = 2300 MHz; σ = 1.697 S/m; ε_r = 40.06; ρ = 1000 kg/m^3
Ambient Temperature：23.2 ℃; Liquid Temperature：22.2 ℃

DASY5 Configuration:
- Probe: EX3DV4 - SN7346; ConvF(7.81, 7.81, 7.81) @ 2300 MHz; Calibrated: 2019/4/25
- Sensor-Surface: 1.4mm (Mechanical Surface Detection)
- Electronics: DAE4 Sn853; Calibrated: 2019/7/18
- Phantom: SAM_Right; Type: SAM; Serial: TP:1479
- Measurement SW: DASY52, Version 52.10 (2);SEMCAD X Version 14.6.12 (7470)

Pin=250mW/Area Scan (71x71x1): Interpolated grid: dx=1.200 mm, dy=1.200 mm
Maximum value of SAR (interpolated) = 18.8 W/kg

Pin=250mW/Zoom Scan (7x7x7)/Cube 0: Measurement grid: dx=5mm, dy=5mm, dz=5mm
Reference Value = 109.2 V/m; Power Drift = -0.07 dB
Peak SAR (extrapolated) = 22.5 W/kg
SAR(1 g) = 11.3 W/kg; SAR(10 g) = 5.35 W/kg
Maximum value of SAR (measured) = 18.5 W/kg

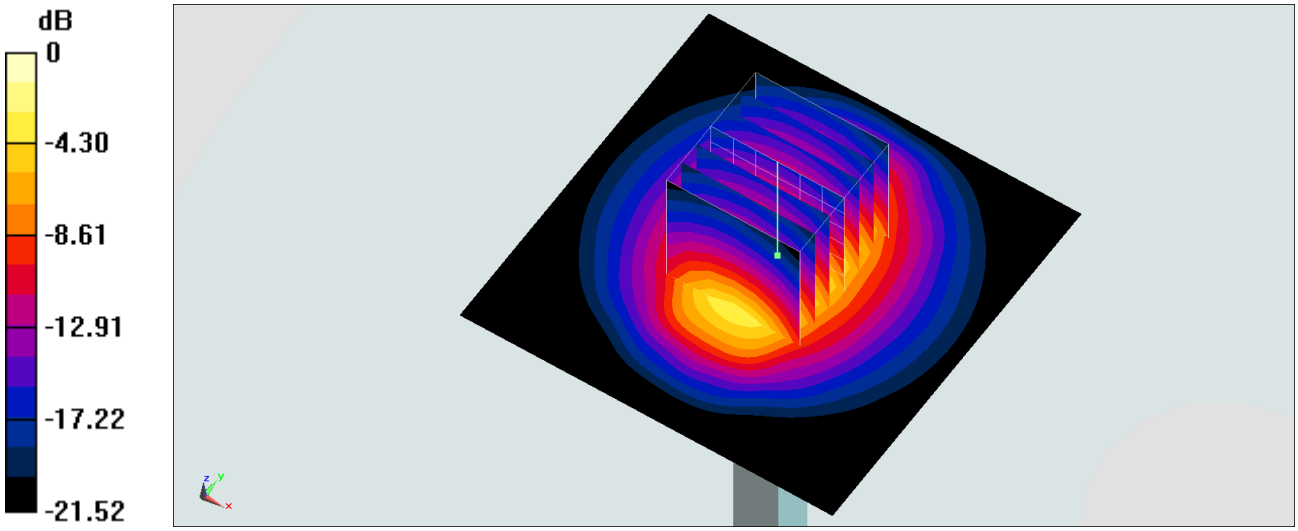

0 dB = 18.5 W/kg = 12.67 dBW/kg

System Check_Head_2300MHz

DUT: D2300V2-1006

Communication System: CW ; Frequency: 2300 MHz;Duty Cycle: 1:1
Medium: HSL_2300_200227 Medium parameters used: f = 2300 MHz; σ = 1.599 S/m; ε_r = 40.407; ρ = 1000 kg/m^3
Ambient Temperature：23.4 ℃; Liquid Temperature：22.4 ℃

DASY5 Configuration:
- Probe: EX3DV4 - SN7346; ConvF(7.81, 7.81, 7.81) @ 2300 MHz; Calibrated: 2019/4/25
- Sensor-Surface: 1.4mm (Mechanical Surface Detection)
- Electronics: DAE4 Sn853; Calibrated: 2019/7/18
- Phantom: SAM_Right; Type: SAM; Serial: TP:1479
- Measurement SW: DASY52, Version 52.10 (2);SEMCAD X Version 14.6.12 (7470)

Pin=250mW/Area Scan (71x71x1): Interpolated grid: dx=1.200 mm, dy=1.200 mm
Maximum value of SAR (interpolated) = 18.5 W/kg

Pin=250mW/Zoom Scan (7x7x7)/Cube 0: Measurement grid: dx=5mm, dy=5mm, dz=5mm
Reference Value = 110.2 V/m; Power Drift = 0.07 dB
Peak SAR (extrapolated) = 22.8 W/kg
SAR(1 g) = 11.2 W/kg; SAR(10 g) = 5.32 W/kg
Maximum value of SAR (measured) = 18.4 W/kg

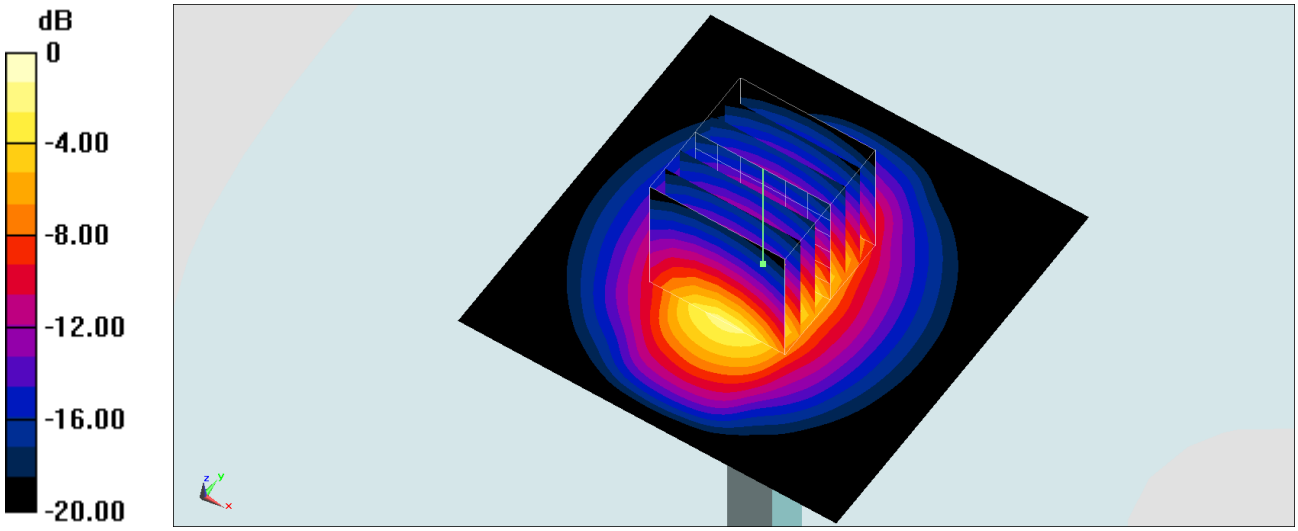

0 dB = 18.4 W/kg = 12.65 dBW/kg

Test Laboratory: Sporton International Inc. SAR/HAC Testing Lab Date: 2020.2.20

System Check_Head_2450MHz

DUT: D2450V2-929

Communication System: CW; Frequency: 2450 MHz;Duty Cycle: 1:1
Medium: HSL_2450 Medium parameters used: f = 2450 MHz; σ = 1.796 S/m; ε_r = 40.869; ρ = 1000 kg/m^3
Ambient Temperature：23.3 ℃; Liquid Temperature：22.8 ℃

DASY5 Configuration:
- Probe: ES3DV3 - SN3293; ConvF(4.6, 4.6, 4.6); Calibrated: 2019.11.25
- Sensor-Surface: 3mm (Mechanical Surface Detection)
- Electronics: DAE4 Sn1338; Calibrated: 2019.11.20
- Phantom: SAM2; Type: SAM; Serial: TP-1503
- Measurement SW: DASY52, Version 52.10 (1); SEMCAD X Version 14.6.11 (7439)

Pin=250mW/Area Scan (71x71x1): Interpolated grid: dx=1.200 mm, dy=1.200 mm
Maximum value of SAR (interpolated) = 18.3 W/kg

Pin=250mW/Zoom Scan (7x7x7)/Cube 0: Measurement grid: dx=5mm, dy=5mm, dz=5mm
Reference Value = 103.0 V/m; Power Drift = 0.01 dB
Peak SAR (extrapolated) = 28.0 W/kg
SAR(1 g) = 13.2 W/kg; SAR(10 g) = 5.98 W/kg
Maximum value of SAR (measured) = 17.6 W/kg

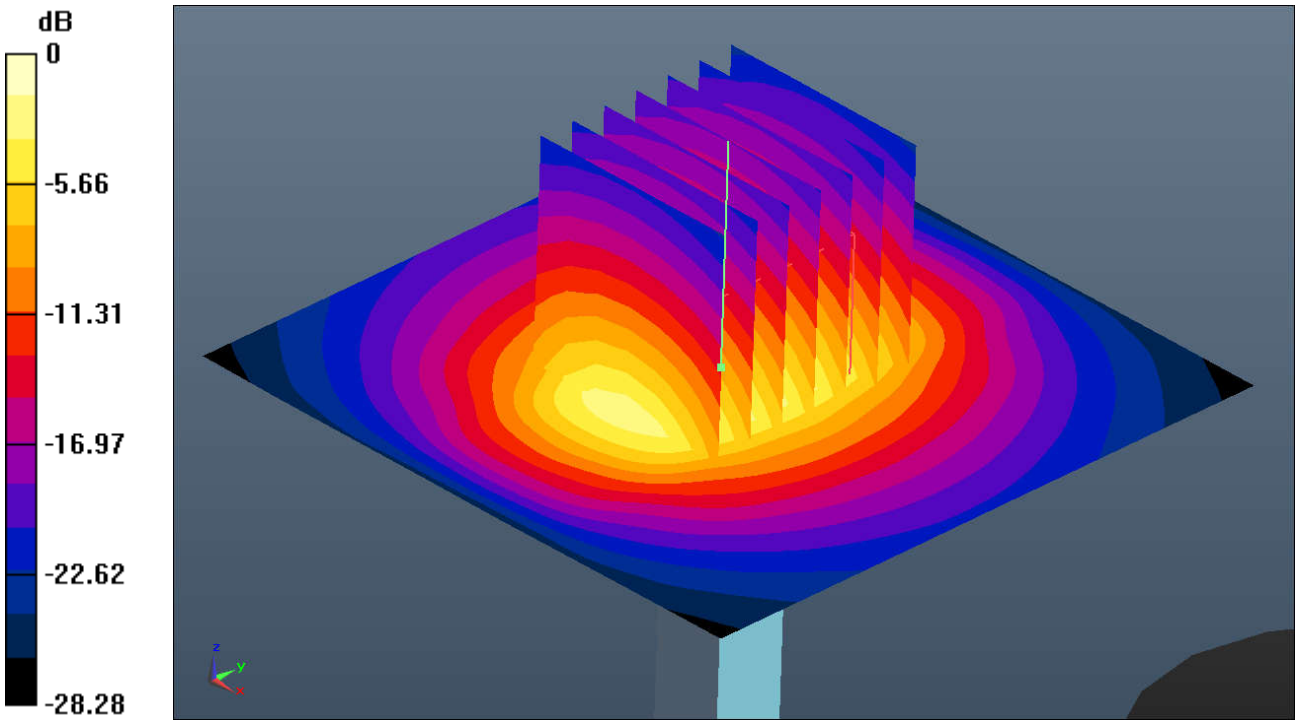

0 dB = 17.6 W/kg = 12.46 dBW/kg

System Check_Head_2450MHz

DUT: D2450V2-736

Communication System: CW; Frequency: 2450 MHz;Duty Cycle: 1:1
Medium: HSL_2450_200222 Medium parameters used: f = 2450 MHz; σ = 1.816 S/m; ε_r = 39.867; ρ = 1000 kg/m^3
Ambient Temperature：23.6 ℃; Liquid Temperature：22.6 ℃

DASY5 Configuration:
- Probe: EX3DV4 - SN7346; ConvF(7.5, 7.5, 7.5) @ 2450 MHz; Calibrated: 2019/4/25
- Sensor-Surface: 1.4mm (Mechanical Surface Detection)
- Electronics: DAE4 Sn853; Calibrated: 2019/7/18
- Phantom: SAM_Right; Type: SAM; Serial: TP:1479
- Measurement SW: DASY52, Version 52.10 (2);SEMCAD X Version 14.6.12 (7470)

Pin=250mW/Area Scan (71x71x1): Interpolated grid: dx=1.200 mm, dy=1.200 mm
Maximum value of SAR (interpolated) = 20.9 W/kg

Pin=250mW/Zoom Scan (7x7x7)/Cube 0: Measurement grid: dx=5mm, dy=5mm, dz=5mm
Reference Value = 111.5 V/m; Power Drift = -0.17 dB
Peak SAR (extrapolated) = 24.9 W/kg
SAR(1 g) = 12.6 W/kg; SAR(10 g) = 5.95 W/kg
Maximum value of SAR (measured) = 20.5 W/kg

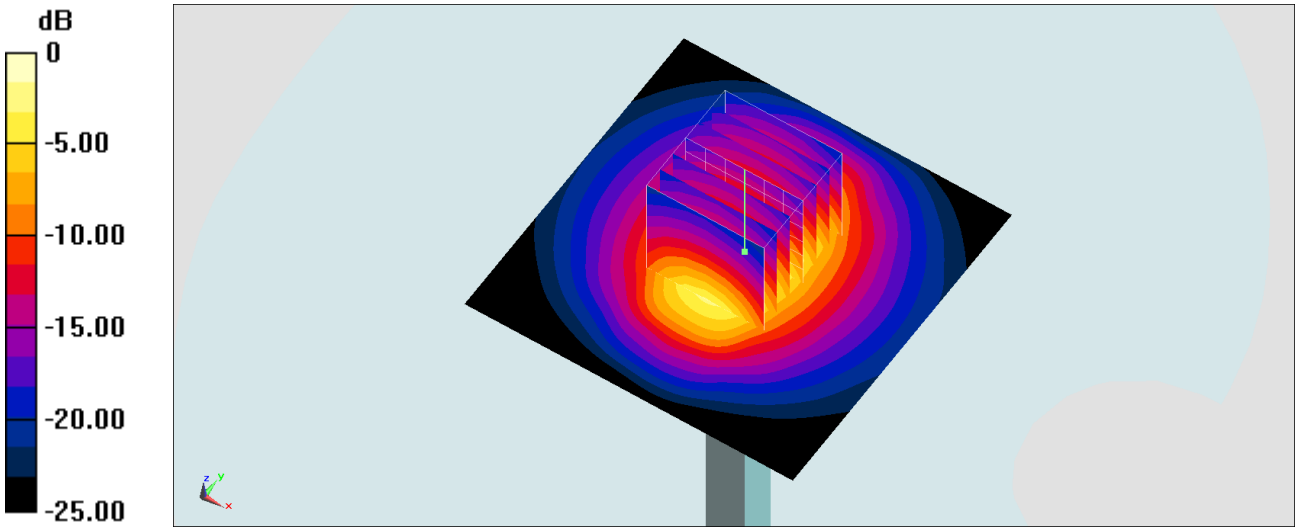

0 dB = 20.5 W/kg = 13.12 dBW/kg

Test Laboratory: Sporton International Inc. SAR/HAC Testing Lab Date: 2020.2.22

System Check_Head_2450MHz

DUT: D2450V2-929

Communication System:CW; Frequency: 2450 MHz;Duty Cycle: 1:1
Medium: HSL_2450 Medium parameters used: f = 2450 MHz; σ = 1.86 S/m; ε_r = 38.535; ρ = 1000 kg/m^3
Ambient Temperature：23.3 ℃； Liquid Temperature：22.7 ℃

DASY5 Configuration:
- Probe: EX3DV4 - SN3857; ConvF(7.5, 7.5, 7.5); Calibrated: 2019.5.27
- Sensor-Surface: 1.4mm (Mechanical Surface Detection)
- Electronics: DAE4 Sn1210; Calibrated: 2019.7.23
- Phantom: SAM1; Type: SAM; Serial: 1697
- Measurement SW: DASY52, Version 52.10 (1); SEMCAD X Version 14.6.11 (7439)

Pin=250mW/Area Scan (71x71x1): Interpolated grid: dx=1.200 mm, dy=1.200 mm
Maximum value of SAR (interpolated) = 18.9 W/kg

Pin=250mW/Zoom Scan (7x7x7)/Cube 0: Measurement grid: dx=5mm, dy=5mm, dz=5mm
Reference Value = 84.99 V/m; Power Drift = 0.01 dB
Peak SAR (extrapolated) = 24.1 W/kg
SAR(1 g) = 12.4 W/kg; SAR(10 g) = 5.92 W/kg
Maximum value of SAR (measured) = 18.5 W/kg

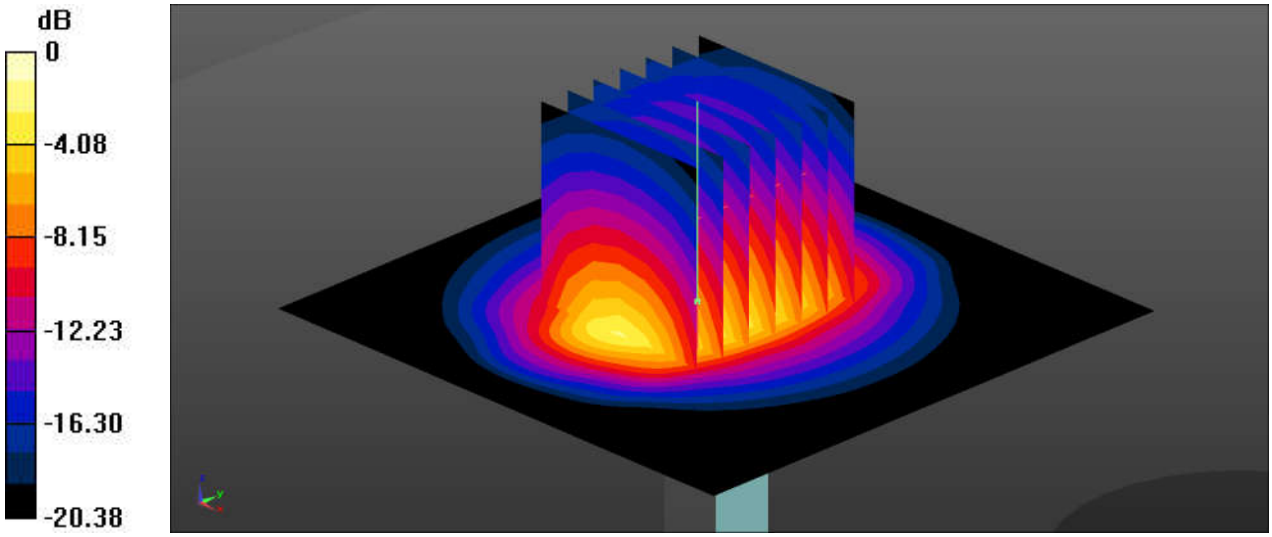

0 dB = 18.5 W/kg = 12.67 dBW/kg

System Check_Head_2600MHz

DUT: D2600V2-1078

Communication System: CW; Frequency: 2600 MHz;Duty Cycle: 1:1
Medium: HSL_2600_200120 Medium parameters used: f = 2600 MHz; σ = 1.974 S/m; ε_r = 39.394; ρ = 1000 kg/m^3
Ambient Temperature：23.3 ℃; Liquid Temperature：22.3 ℃

DASY5 Configuration:
- Probe: EX3DV4 - SN3642; ConvF(7.14, 7.14, 7.14) @ 2600 MHz; Calibrated: 2019/4/29
- Sensor-Surface: 1.4mm (Mechanical Surface Detection)
- Electronics: DAE4 Sn854; Calibrated: 2019/5/21
- Phantom: SAM_Left; Type: QD000P40CD; Serial: TP:1682
- Measurement SW: DASY52, Version 52.10 (2);SEMCAD X Version 14.6.12 (7470)

Pin=250mW/Area Scan (71x71x1): Interpolated grid: dx=1.200 mm, dy=1.200 mm
Maximum value of SAR (interpolated) = 21.3 W/kg

Pin=250mW/Zoom Scan (7x7x7)/Cube 0: Measurement grid: dx=5mm, dy=5mm, dz=5mm
Reference Value = 113.4 V/m; Power Drift = -0.01 dB
Peak SAR (extrapolated) = 29.5 W/kg
SAR(1 g) = 14.2 W/kg; SAR(10 g) = 6.51 W/kg
Maximum value of SAR (measured) = 23.9 W/kg

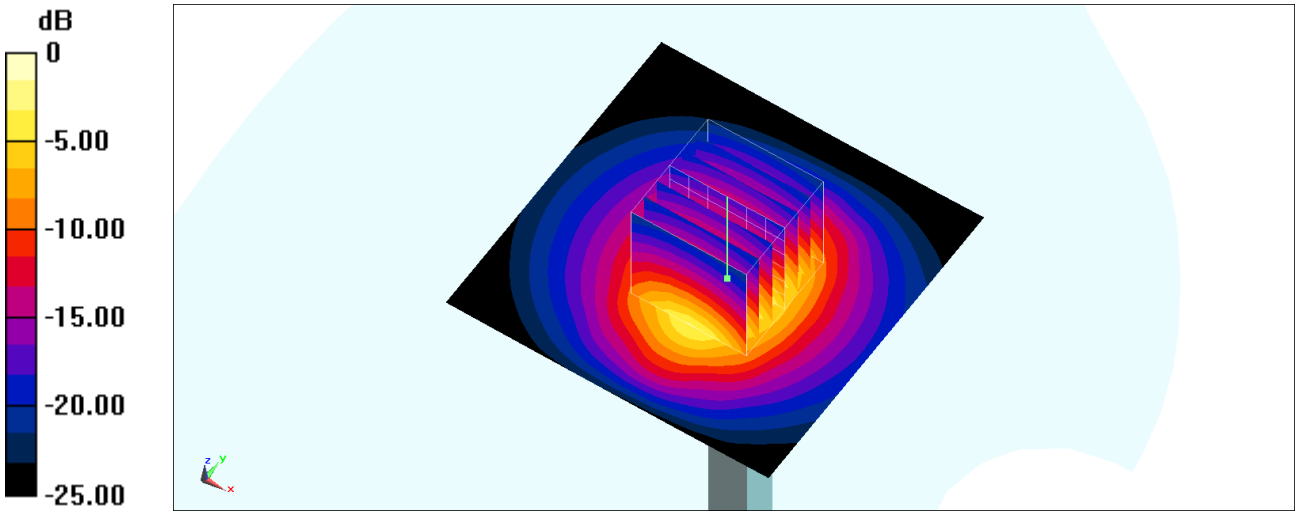

0 dB = 23.9 W/kg = 13.78 dBW/kg

System Check_Head_2600MHz

DUT: D2600V2-1008

Communication System: CW; Frequency: 2600 MHz;Duty Cycle: 1:1
Medium: HSL_2600_200122 Medium parameters used: f = 2600 MHz; σ = 1.918 S/m; ε_r = 37.852; ρ = 1000 kg/m^3
Ambient Temperature：23.6 ℃; Liquid Temperature：22.6 ℃

DASY5 Configuration:
- Probe: EX3DV4 - SN7346; ConvF(7.31, 7.31, 7.31) @ 2600 MHz; Calibrated: 2019/4/25
- Sensor-Surface: 1.4mm (Mechanical Surface Detection)
- Electronics: DAE4 Sn853; Calibrated: 2019/7/18
- Phantom: SAM_Left; Type: QD000P40CD; Serial: TP:1477
- Measurement SW: DASY52, Version 52.10 (2);SEMCAD X Version 14.6.12 (7470)

Pin=250mW/Area Scan (71x71x1): Interpolated grid: dx=1.200 mm, dy=1.200 mm
Maximum value of SAR (interpolated) = 24.3 W/kg

Pin=250mW/Zoom Scan (7x7x7)/Cube 0: Measurement grid: dx=5mm, dy=5mm, dz=5mm
Reference Value = 117.5 V/m; Power Drift = -0.02 dB
Peak SAR (extrapolated) = 30.2 W/kg
SAR(1 g) = 14.1 W/kg; SAR(10 g) = 6.3 W/kg
Maximum value of SAR (measured) = 24.2 W/kg

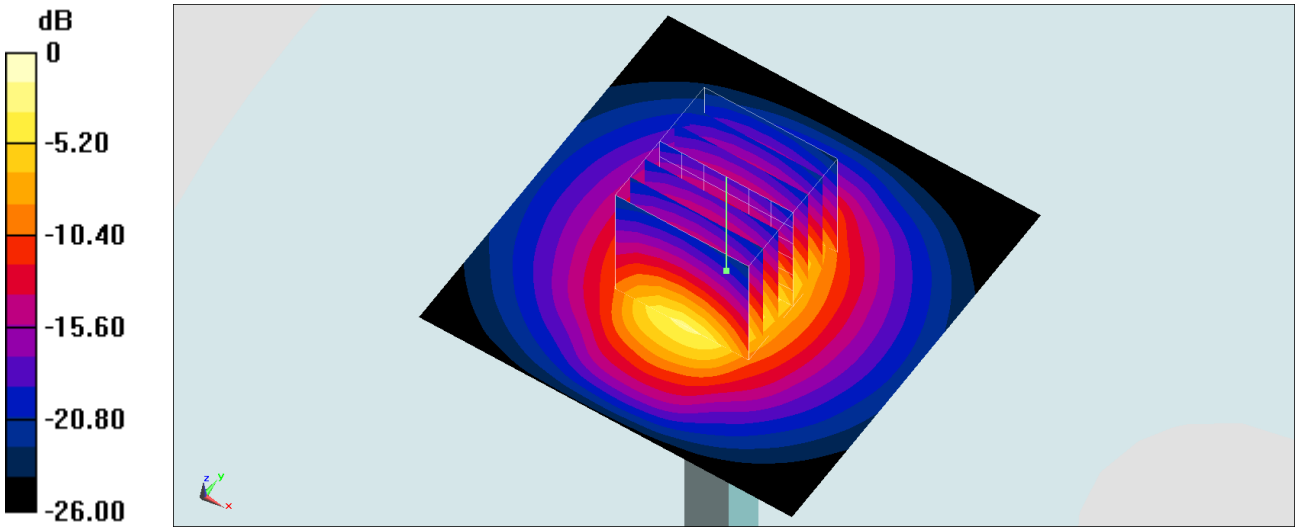

0 dB = 24.2 W/kg = 13.84 dBW/kg

System Check_Head_2600MHz

DUT: D2600V2-1008

Communication System: CW; Frequency: 2600 MHz;Duty Cycle: 1:1
Medium: HSL_2600_200124 Medium parameters used: f = 2600 MHz; σ = 1.926 S/m; ε_r = 39.104; ρ = 1000 kg/m^3
Ambient Temperature：23.5 ℃; Liquid Temperature：22.5 ℃

DASY5 Configuration:
- Probe: EX3DV4 - SN7346; ConvF(7.31, 7.31, 7.31) @ 2600 MHz; Calibrated: 2019/4/25
- Sensor-Surface: 1.4mm (Mechanical Surface Detection)
- Electronics: DAE4 Sn853; Calibrated: 2019/7/18
- Phantom: SAM_Left; Type: QD000P40CD; Serial: TP:1682
- Measurement SW: DASY52, Version 52.10 (2);SEMCAD X Version 14.6.12 (7470)

Pin=250mW/Area Scan (71x71x1): Interpolated grid: dx=1.200 mm, dy=1.200 mm
Maximum value of SAR (interpolated) = 24.4 W/kg

Pin=250mW/Zoom Scan (7x7x7)/Cube 0: Measurement grid: dx=5mm, dy=5mm, dz=5mm
Reference Value = 117.5 V/m; Power Drift = -0.07 dB
Peak SAR (extrapolated) = 30.3 W/kg
SAR(1 g) = 14.2 W/kg; SAR(10 g) = 6.33 W/kg
Maximum value of SAR (measured) = 24.3 W/kg

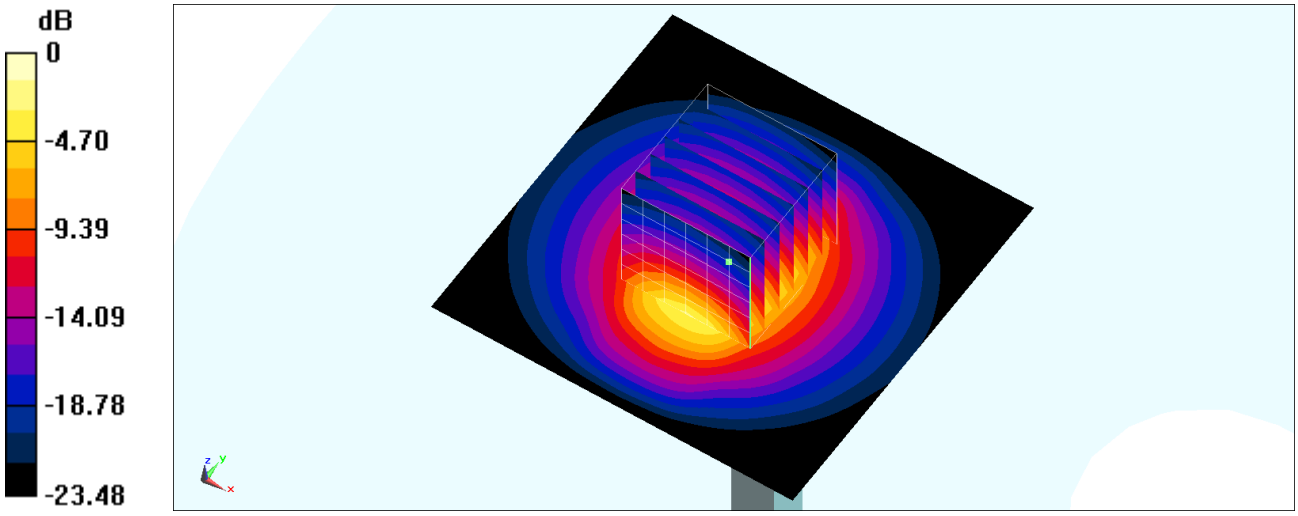

0 dB = 24.3 W/kg = 13.86 dBW/kg

System Check_Head_2600MHz

DUT: D2600V2-1008

Communication System: CW; Frequency: 2600 MHz;Duty Cycle: 1:1
Medium: HSL_2600_200125 Medium parameters used: f = 2600 MHz; σ = 2.025 S/m; ε_r = 38.406; ρ = 1000 kg/m^3
Ambient Temperature：23.5 ℃; Liquid Temperature：22.5 ℃

DASY5 Configuration:
- Probe: ES3DV3 - SN3184; ConvF(4.49, 4.49, 4.49) @ 2600 MHz; Calibrated: 2019/9/25
- Sensor-Surface: 3mm (Mechanical Surface Detection)
- Electronics: DAE4 Sn1305; Calibrated: 2019/4/30
- Phantom: SAM_Left; Type: QD000P40CD; Serial: TP:1684
- Measurement SW: DASY52, Version 52.10 (2);SEMCAD X Version 14.6.12 (7470)

Pin=250mW/Area Scan (81x81x1): Interpolated grid: dx=1.200 mm, dy=1.200 mm
Maximum value of SAR (interpolated) = 19.1 W/kg

Pin=250mW/Zoom Scan (7x7x7)/Cube 0: Measurement grid: dx=5mm, dy=5mm, dz=5mm
Reference Value = 98.04 V/m; Power Drift = -0.03 dB
Peak SAR (extrapolated) = 29.5 W/kg
SAR(1 g) = 13.9 W/kg; SAR(10 g) = 6.28 W/kg
Maximum value of SAR (measured) = 18.6 W/kg

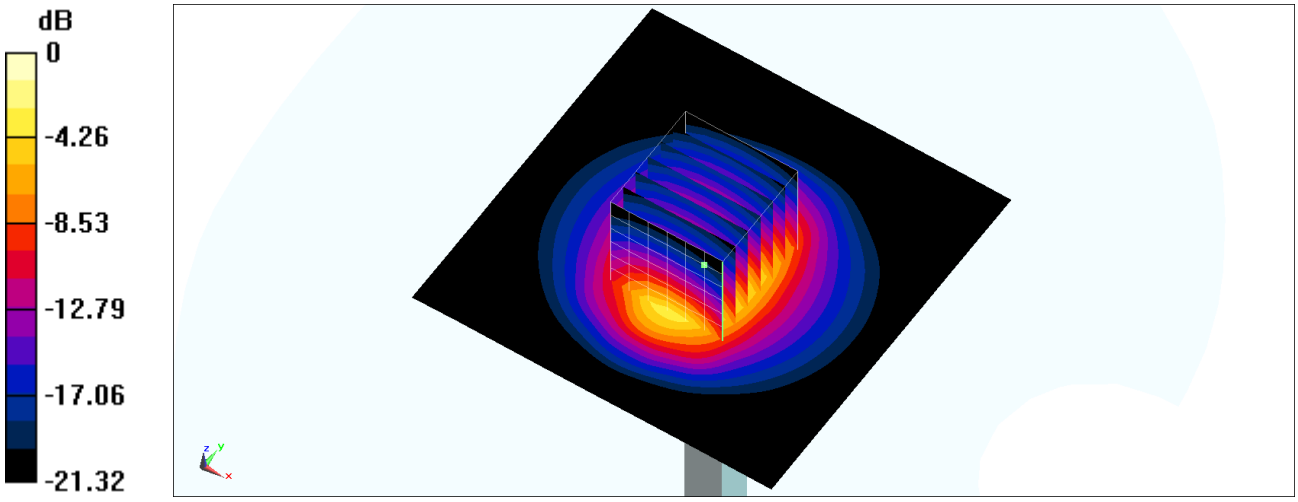

0 dB = 18.6 W/kg = 12.70 dBW/kg

System Check_Head_2600MHz

DUT: D2600V2-1008

Communication System: CW; Frequency: 2600 MHz;Duty Cycle: 1:1
Medium: HSL_2600_200203 Medium parameters used: f = 2600 MHz; σ = 1.977 S/m; ε_r = 38.677; ρ = 1000 kg/m^3
Ambient Temperature：23.6 ℃; Liquid Temperature：22.6 ℃

DASY5 Configuration:
- Probe: EX3DV4 - SN3642; ConvF(7.14, 7.14, 7.14) @ 2600 MHz; Calibrated: 2019/4/29
- Sensor-Surface: 1.4mm (Mechanical Surface Detection)
- Electronics: DAE4 Sn854; Calibrated: 2019/5/21
- Phantom: SAM_Left; Type: QD000P40CD; Serial: TP:1682
- Measurement SW: DASY52, Version 52.10 (2);SEMCAD X Version 14.6.12 (7470)

Pin=250mW/Area Scan (61x61x1): Interpolated grid: dx=1.200 mm, dy=1.200 mm
Maximum value of SAR (interpolated) = 26.4 W/kg

Pin=250mW/Zoom Scan (7x7x7)/Cube 0: Measurement grid: dx=5mm, dy=5mm, dz=5mm
Reference Value = 120.5 V/m; Power Drift = -0.03 dB
Peak SAR (extrapolated) = 33.5 W/kg
SAR(1 g) = 15.1 W/kg; SAR(10 g) = 6.58 W/kg
Maximum value of SAR (measured) = 26.5 W/kg

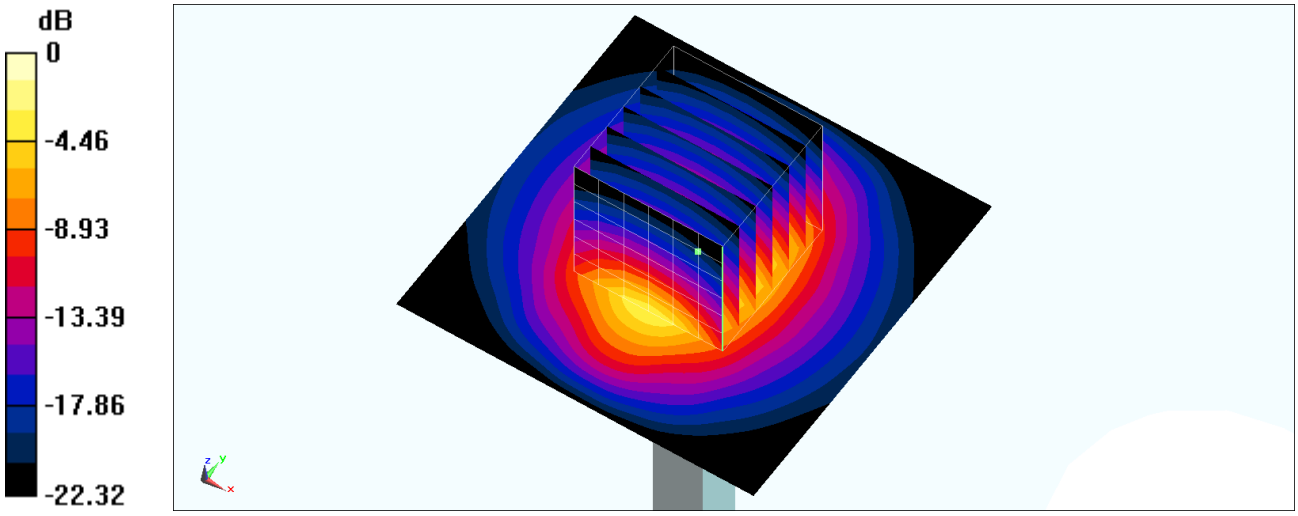

0 dB = 26.5 W/kg = 14.23 dBW/kg

System Check_Head_2600MHz

DUT: D2600V2-1008

Communication System: CW; Frequency: 2600 MHz;Duty Cycle: 1:1
Medium: HSL_2600_200214 Medium parameters used: f = 2600 MHz; σ = 2.016 S/m; ε_r = 38.814; ρ = 1000 kg/m^3
Ambient Temperature：23.2 ℃; Liquid Temperature：22.2 ℃

DASY5 Configuration:
- Probe: EX3DV4 - SN7346; ConvF(7.31, 7.31, 7.31) @ 2600 MHz; Calibrated: 2019/4/25
- Sensor-Surface: 1.4mm (Mechanical Surface Detection)
- Electronics: DAE4 Sn853; Calibrated: 2019/7/18
- Phantom: SAM_Right; Type: SAM; Serial: TP:1479
- Measurement SW: DASY52, Version 52.10 (2);SEMCAD X Version 14.6.12 (7470)

Pin=250mW/Area Scan (71x71x1): Interpolated grid: dx=1.200 mm, dy=1.200 mm
Maximum value of SAR (interpolated) = 25.5 W/kg

Pin=250mW/Zoom Scan (7x7x7)/Cube 0: Measurement grid: dx=5mm, dy=5mm, dz=5mm
Reference Value = 117.5 V/m; Power Drift = -0.06 dB
Peak SAR (extrapolated) = 31.7 W/kg
SAR(1 g) = 14.9 W/kg; SAR(10 g) = 6.62 W/kg
Maximum value of SAR (measured) = 25.5 W/kg

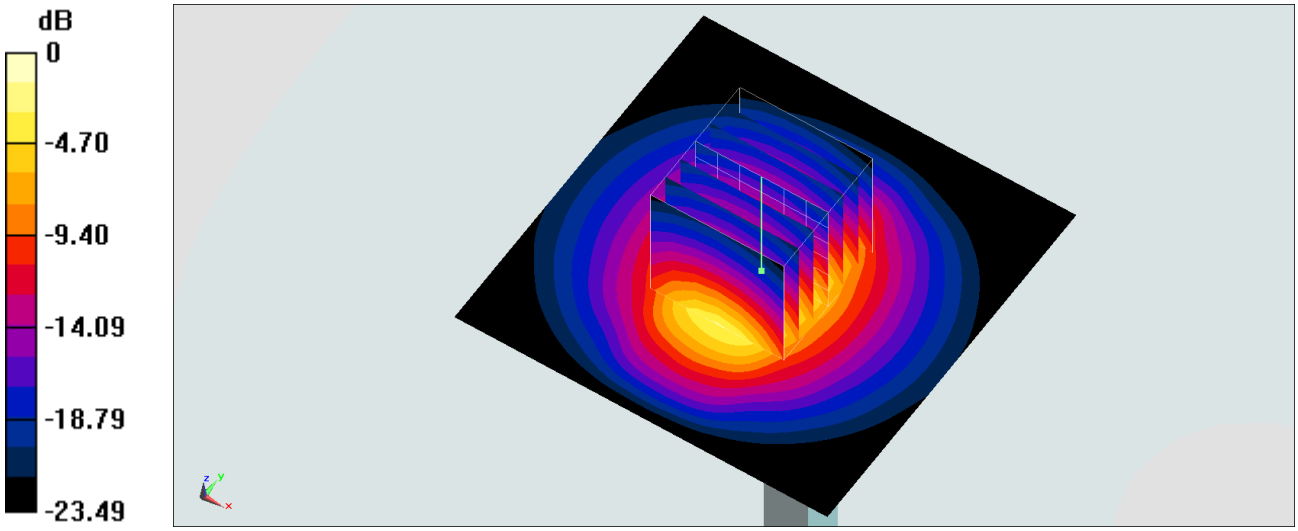

0 dB = 25.5 W/kg = 14.07 dBW/kg

System Check_Head_2600MHz

DUT: D2600V2-1008

Communication System: CW; Frequency: 2600 MHz;Duty Cycle: 1:1
Medium: HSL_2600_200217 Medium parameters used: f = 2600 MHz; σ = 1.973 S/m; ε_r = 38.714; ρ = 1000 kg/m^3
Ambient Temperature：23.2 ℃; Liquid Temperature：22.2 ℃

DASY5 Configuration:
- Probe: EX3DV4 - SN7346; ConvF(7.31, 7.31, 7.31) @ 2600 MHz; Calibrated: 2019/4/25
- Sensor-Surface: 1.4mm (Mechanical Surface Detection)
- Electronics: DAE4 Sn853; Calibrated: 2019/7/18
- Phantom: SAM_Right; Type: SAM; Serial: TP:1479
- Measurement SW: DASY52, Version 52.10 (2);SEMCAD X Version 14.6.12 (7470)

Pin=250mW/Area Scan (81x81x1): Interpolated grid: dx=1.200 mm, dy=1.200 mm
Maximum value of SAR (interpolated) = 22.2 W/kg

Pin=250mW/Zoom Scan (7x7x7)/Cube 0: Measurement grid: dx=5mm, dy=5mm, dz=5mm
Reference Value = 109.1 V/m; Power Drift = -0.02 dB
Peak SAR (extrapolated) = 27.9 W/kg
SAR(1 g) = 13.2 W/kg; SAR(10 g) = 6.02 W/kg
Maximum value of SAR (measured) = 22.4 W/kg

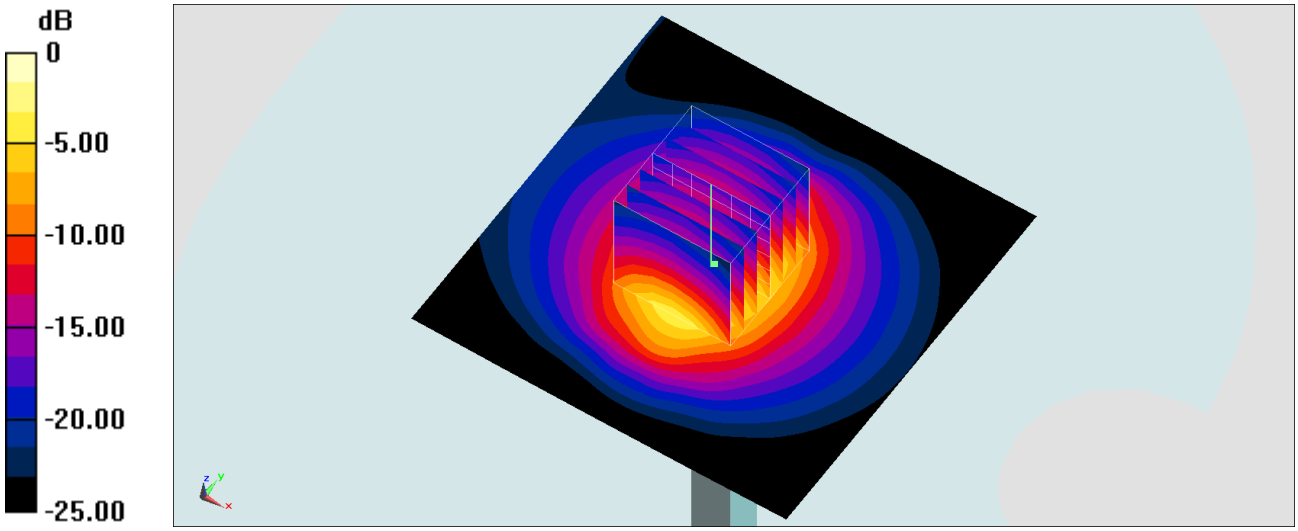

0 dB = 22.4 W/kg = 13.50 dBW/kg

System Check_Head_2600MHz

DUT: D2600V2-1008

Communication System: CW; Frequency: 2600 MHz;Duty Cycle: 1:1
Medium: HSL_2600_200227 Medium parameters used: f = 2600 MHz; σ = 1.958 S/m; ε_r = 39.335; ρ = 1000 kg/m^3
Ambient Temperature：23.4 ℃; Liquid Temperature：22.4 ℃

DASY5 Configuration:
- Probe: EX3DV4 - SN7346; ConvF(7.31, 7.31, 7.31) @ 2600 MHz; Calibrated: 2019/4/25
- Sensor-Surface: 1.4mm (Mechanical Surface Detection)
- Electronics: DAE4 Sn853; Calibrated: 2019/7/18
- Phantom: SAM_Right; Type: SAM; Serial: TP:1479
- Measurement SW: DASY52, Version 52.10 (2);SEMCAD X Version 14.6.12 (7470)

Pin=250mW/Area Scan (61x61x1): Interpolated grid: dx=1.200 mm, dy=1.200 mm
Maximum value of SAR (interpolated) = 23.9 W/kg

Pin=250mW/Zoom Scan (7x7x7)/Cube 0: Measurement grid: dx=5mm, dy=5mm, dz=5mm
Reference Value = 114.9 V/m; Power Drift = -0.06 dB
Peak SAR (extrapolated) = 29.6 W/kg
SAR(1 g) = 13.5 W/kg; SAR(10 g) = 5.98 W/kg
Maximum value of SAR (measured) = 23.6 W/kg

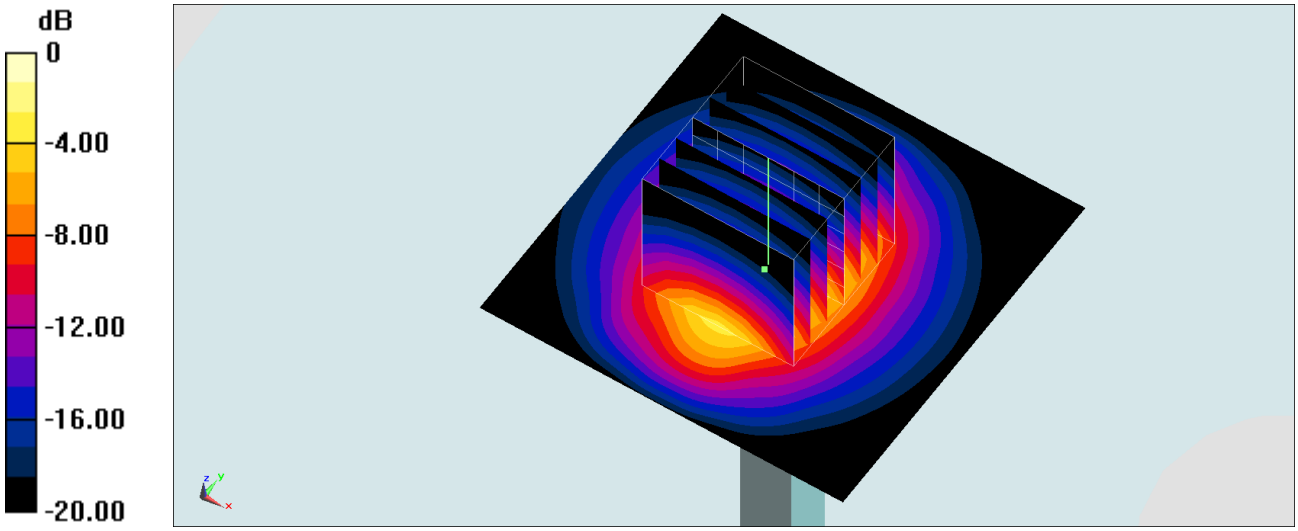

0 dB = 23.6 W/kg = 13.73 dBW/kg

System Check_Head_3500MHz

DUT: D3500V2-1014

Communication System: CW; Frequency: 3500 MHz;Duty Cycle: 1:1
Medium: HSL_3500_200125 Medium parameters used: f = 3500 MHz; σ = 3.005 S/m; ε_r = 38.793; ρ = 1000 kg/m^3
Ambient Temperature：23.4 ℃; Liquid Temperature：22.4 ℃

DASY5 Configuration:
- Probe: EX3DV4 - SN3642; ConvF(6.75, 6.75, 6.75) @ 3500 MHz; Calibrated: 2019/4/29
- Sensor-Surface: 1.4mm (Mechanical Surface Detection)
- Electronics: DAE4 Sn854; Calibrated: 2019/5/21
- Phantom: SAM_Right; Type: SAM; Serial: TP:1681
- Measurement SW: DASY52, Version 52.10 (2);SEMCAD X Version 14.6.12 (7470)

Pin=100mW/Area Scan (71x71x1): Interpolated grid: dx=1.200 mm, dy=1.200 mm
Maximum value of SAR (interpolated) = 13.0 W/kg

Pin=100mW/Zoom Scan (7x7x7)/Cube 0: Measurement grid: dx=5mm, dy=5mm, dz=1.4mm
Reference Value = 62.55 V/m; Power Drift = 0.05 dB
Peak SAR (extrapolated) = 17.6 W/kg
SAR(1 g) = 6.82 W/kg; SAR(10 g) = 2.61 W/kg
Maximum value of SAR (measured) = 13.0 W/kg

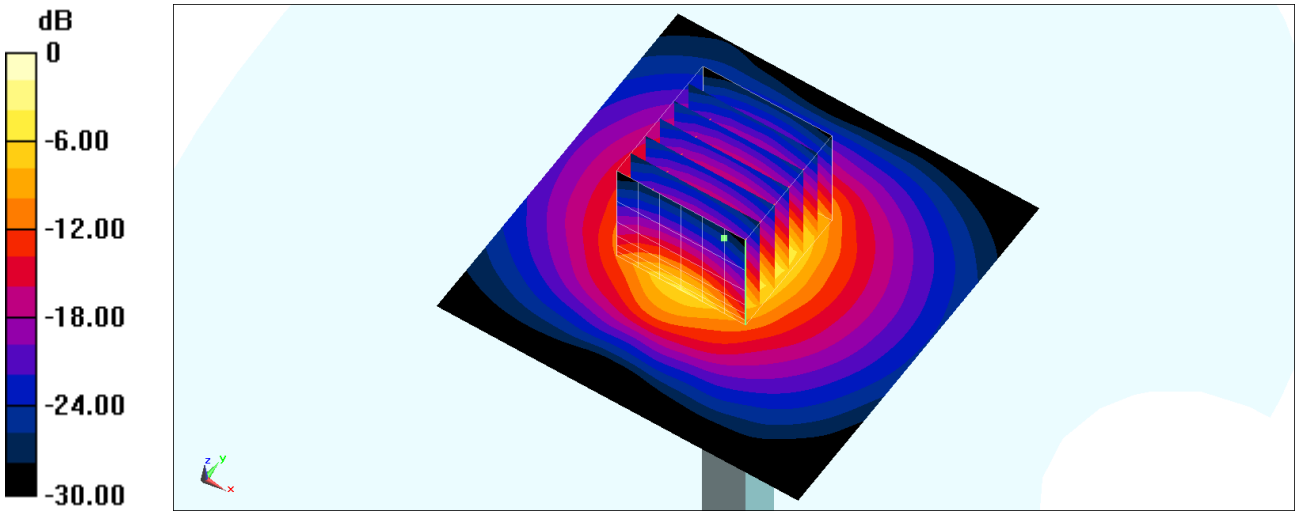

0 dB = 13.0 W/kg = 11.14 dBW/kg

System Check_Head_3500MHz

DUT: D3500V2-1014

Communication System: CW; Frequency: 3500 MHz;Duty Cycle: 1:1
Medium: HSL_3500_200204 Medium parameters used: f = 3500 MHz; σ = 2.965 S/m; ε_r = 38.964; ρ = 1000 kg/m^3
Ambient Temperature：23.3 ℃; Liquid Temperature：22.3 ℃

DASY5 Configuration:
- Probe: EX3DV4 - SN3642; ConvF(6.75, 6.75, 6.75) @ 3500 MHz; Calibrated: 2019/4/29
- Sensor-Surface: 1.4mm (Mechanical Surface Detection)
- Electronics: DAE4 Sn854; Calibrated: 2019/5/21
- Phantom: SAM_Right; Type: SAM; Serial: TP:1681
- Measurement SW: DASY52, Version 52.10 (2);SEMCAD X Version 14.6.12 (7470)

Pin=100mW/Area Scan (71x71x1): Interpolated grid: dx=1.200 mm, dy=1.200 mm
Maximum value of SAR (interpolated) = 12.8 W/kg

Pin=100mW/Zoom Scan (7x7x7)/Cube 0: Measurement grid: dx=5mm, dy=5mm, dz=1.4mm
Reference Value = 62.55 V/m; Power Drift = 0.05 dB
Peak SAR (extrapolated) = 17.3 W/kg
SAR(1 g) = 6.73 W/kg; SAR(10 g) = 2.58 W/kg
Maximum value of SAR (measured) = 12.9 W/kg

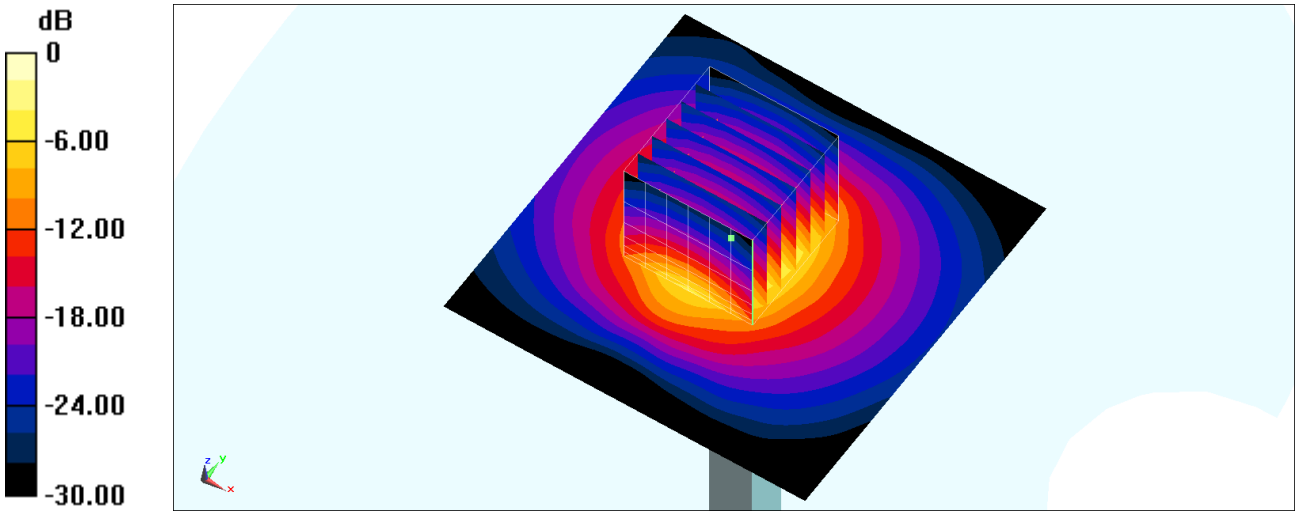

0 dB = 12.9 W/kg = 11.11 dBW/kg

System Check_Head_3500MHz

DUT: D3500V2-1014

Communication System: CW; Frequency: 3500 MHz;Duty Cycle: 1:1
Medium: HSL_3500_200214 Medium parameters used: f = 3500 MHz; σ = 2.959 S/m; ε_r = 38.912; ρ = 1000 kg/m^3
Ambient Temperature：23.8 ℃; Liquid Temperature：22.8 ℃

DASY5 Configuration:
- Probe: EX3DV4 - SN3642; ConvF(6.75, 6.75, 6.75) @ 3500 MHz; Calibrated: 2019/4/29
- Sensor-Surface: 1.4mm (Mechanical Surface Detection)
- Electronics: DAE4 Sn854; Calibrated: 2019/5/21
- Phantom: SAM_Right; Type: SAM; Serial: TP:1681
- Measurement SW: DASY52, Version 52.10 (2);SEMCAD X Version 14.6.12 (7470)

Pin=100mW/Area Scan (71x71x1): Interpolated grid: dx=1.200 mm, dy=1.200 mm
Maximum value of SAR (interpolated) = 12.8 W/kg

Pin=100mW/Zoom Scan (7x7x7)/Cube 0: Measurement grid: dx=5mm, dy=5mm, dz=1.4mm
Reference Value = 62.55 V/m; Power Drift = 0.05 dB
Peak SAR (extrapolated) = 17.3 W/kg
SAR(1 g) = 6.72 W/kg; SAR(10 g) = 2.57 W/kg
Maximum value of SAR (measured) = 12.8 W/kg

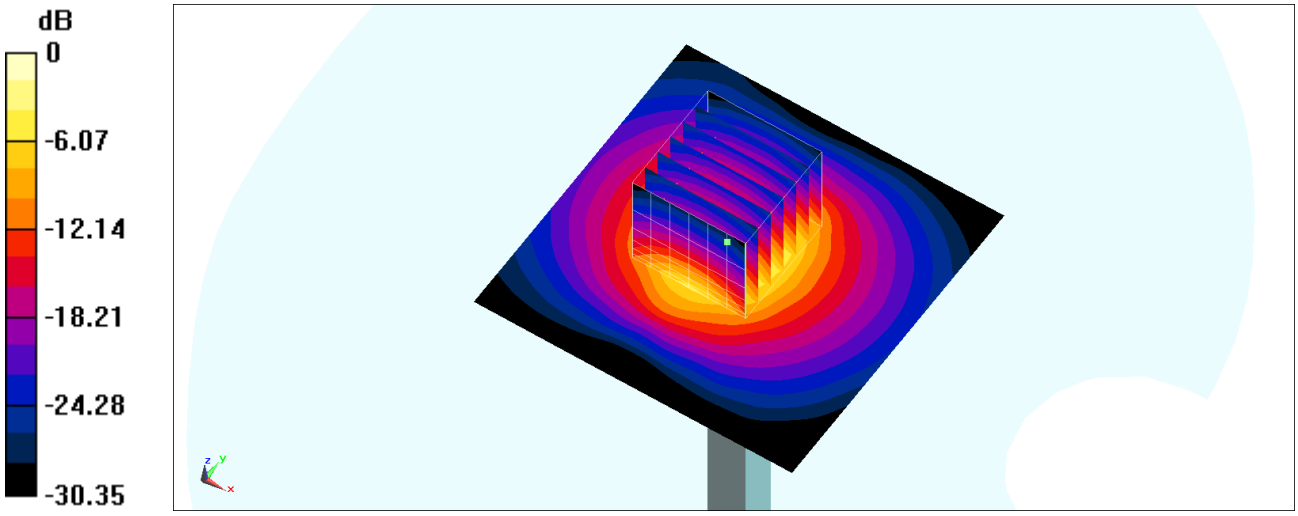

0 dB = 12.8 W/kg = 11.07 dBW/kg

System Check_Head_3700MHz

DUT: D3700V2-1006

Communication System: CW; Frequency: 3700 MHz;Duty Cycle: 1:1
Medium: HSL_3700_200125 Medium parameters used: f = 3700 MHz; σ = 3.159 S/m; ε_r = 38.523; ρ = 1000 kg/m^3
Ambient Temperature：23.4 ℃; Liquid Temperature：22.4 ℃

DASY5 Configuration:
- Probe: EX3DV4 - SN3642; ConvF(6.46, 6.46, 6.46) @ 3700 MHz; Calibrated: 2019/4/29
- Sensor-Surface: 1.4mm (Mechanical Surface Detection)
- Electronics: DAE4 Sn854; Calibrated: 2019/5/21
- Phantom: SAM_Right; Type: SAM; Serial: TP:1681
- Measurement SW: DASY52, Version 52.10 (2);SEMCAD X Version 14.6.12 (7470)

Pin=100mW/Area Scan (71x71x1): Interpolated grid: dx=1.200 mm, dy=1.200 mm
Maximum value of SAR (interpolated) = 14.2 W/kg

Pin=100mW/Zoom Scan (7x7x7)/Cube 0: Measurement grid: dx=5mm, dy=5mm, dz=1.4mm
Reference Value = 70.60 V/m; Power Drift = -0.06 dB
Peak SAR (extrapolated) = 21.4 W/kg
SAR(1 g) = 7.09 W/kg; SAR(10 g) = 2.54 W/kg
Maximum value of SAR (measured) = 14.7 W/kg

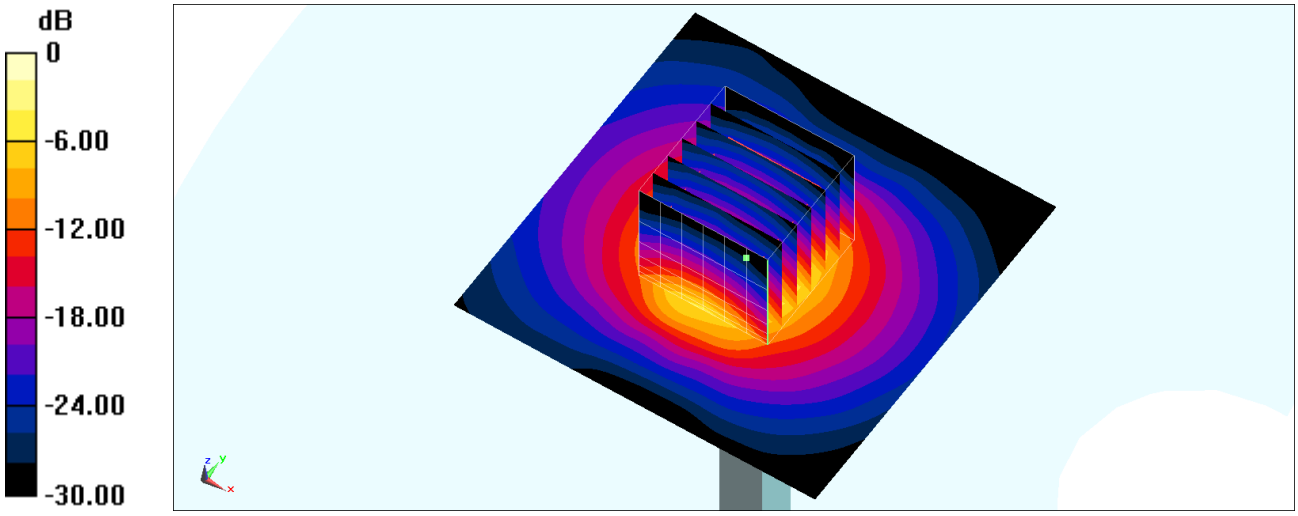

0 dB = 14.7 W/kg = 11.67 dBW/kg

System Check_Head_3700MHz

DUT: D3700V2-1006

Communication System: CW; Frequency: 3700 MHz;Duty Cycle: 1:1
Medium: HSL_3700_200204 Medium parameters used: f = 3700 MHz; σ = 3.123 S/m; ε_r = 38.747; ρ = 1000 kg/m^3
Ambient Temperature：23.3 ℃; Liquid Temperature：22.3 ℃

DASY5 Configuration:
- Probe: EX3DV4 - SN3642; ConvF(6.46, 6.46, 6.46) @ 3700 MHz; Calibrated: 2019/4/29
- Sensor-Surface: 1.4mm (Mechanical Surface Detection)
- Electronics: DAE4 Sn854; Calibrated: 2019/5/21
- Phantom: SAM_Right; Type: SAM; Serial: TP:1681
- Measurement SW: DASY52, Version 52.10 (2);SEMCAD X Version 14.6.12 (7470)

Pin=100mW/Area Scan (71x71x1): Interpolated grid: dx=1.200 mm, dy=1.200 mm
Maximum value of SAR (interpolated) = 14.1 W/kg

Pin=100mW/Zoom Scan (7x7x7)/Cube 0: Measurement grid: dx=5mm, dy=5mm, dz=1.4mm
Reference Value = 70.60 V/m; Power Drift = -0.06 dB
Peak SAR (extrapolated) = 21.1 W/kg
SAR(1 g) = 7.01 W/kg; SAR(10 g) = 2.51 W/kg
Maximum value of SAR (measured) = 14.5 W/kg

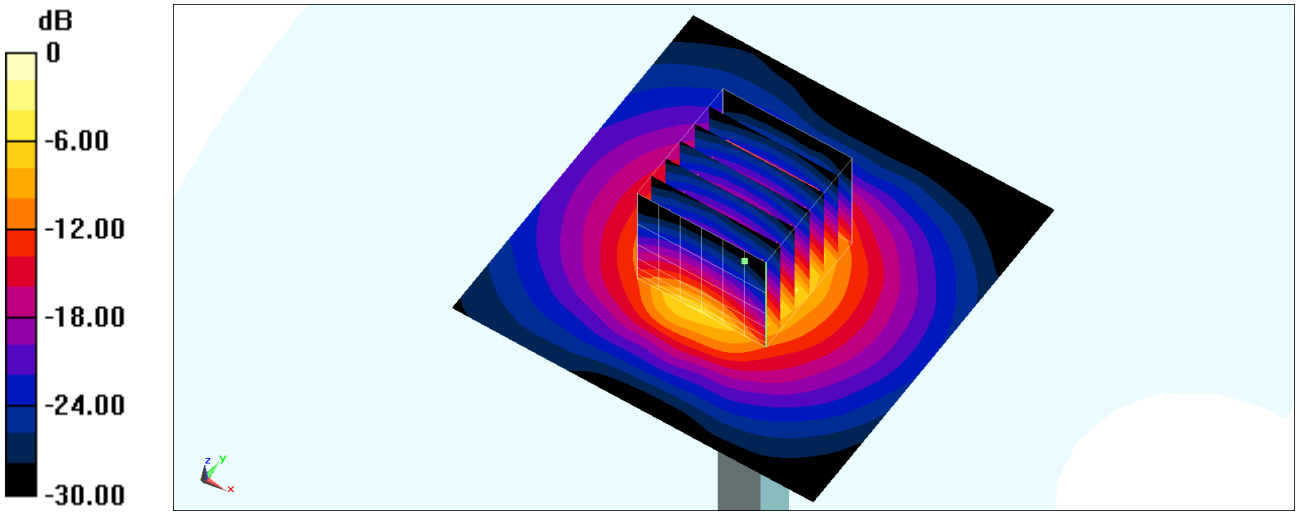

0 dB = 14.5 W/kg = 11.61 dBW/kg

System Check_Head_3700MHz

DUT: D3700V2-1006

Communication System: CW; Frequency: 3700 MHz;Duty Cycle: 1:1
Medium: HSL_3700_200214 Medium parameters used: f = 3700 MHz; σ = 3.116 S/m; ε_r = 38.695; ρ = 1000 kg/m^3
Ambient Temperature：23.8 ℃; Liquid Temperature：22.8 ℃

DASY5 Configuration:
- Probe: EX3DV4 - SN3642; ConvF(6.46, 6.46, 6.46) @ 3700 MHz; Calibrated: 2019/4/29
- Sensor-Surface: 1.4mm (Mechanical Surface Detection)
- Electronics: DAE4 Sn854; Calibrated: 2019/5/21
- Phantom: SAM_Right; Type: SAM; Serial: TP:1681
- Measurement SW: DASY52, Version 52.10 (2);SEMCAD X Version 14.6.12 (7470)

Pin=100mW/Area Scan (71x71x1): Interpolated grid: dx=1.000 mm, dy=1.000 mm
Maximum value of SAR (interpolated) = 14.1 W/kg

Pin=100mW/Zoom Scan (7x7x7)/Cube 0: Measurement grid: dx=4mm, dy=4mm, dz=1.4mm
Reference Value = 68.72 V/m; Power Drift = 0.15 dB
Peak SAR (extrapolated) = 18.7 W/kg
SAR(1 g) = 6.67 W/kg; SAR(10 g) = 2.43 W/kg
Maximum value of SAR (measured) = 13.6 W/kg

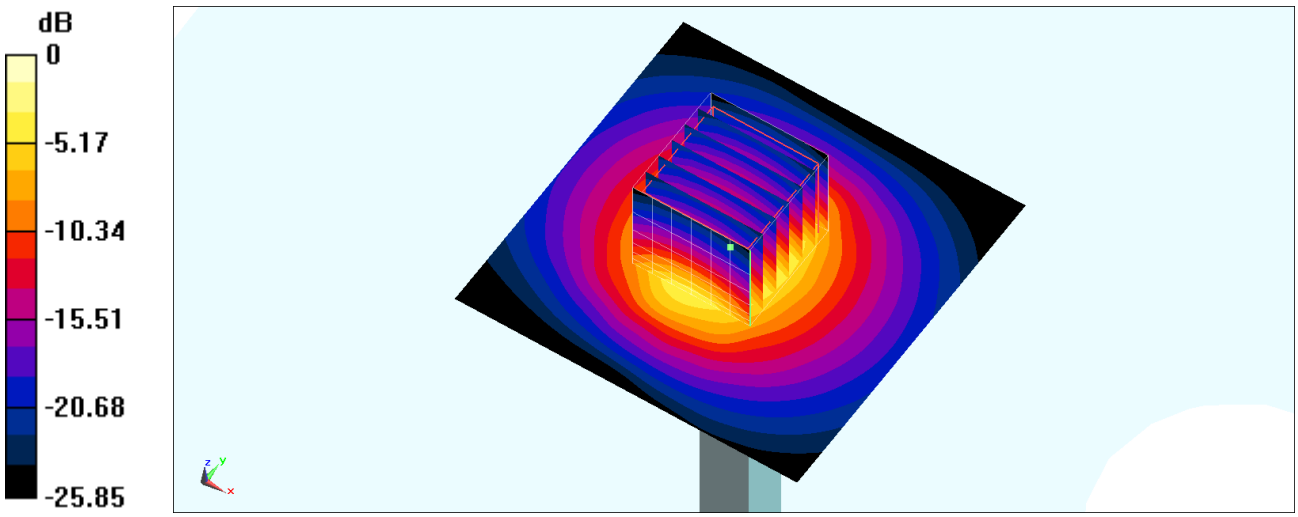

0 dB = 13.6 W/kg = 11.34 dBW/kg

System Check_Head_5250MHz

DUT: D5GHzV2-1006

Communication System: CW; Frequency: 5250 MHz;Duty Cycle: 1:1
Medium: HSL_5G_200221 Medium parameters used : f = 5250 MHz; σ = 4.594 S/m; ε_r = 37.02; ρ = 1000 kg/m^3
Ambient Temperature：23.6 ℃; Liquid Temperature：22.6 ℃

DASY5 Configuration:
- Probe: EX3DV4 - SN7346; ConvF(5.36, 5.36, 5.36) @ 5250 MHz; Calibrated: 2019/4/25
- Sensor-Surface: 1.4mm (Mechanical Surface Detection)
- Electronics: DAE4 Sn853; Calibrated: 2019/7/18
- Phantom: SAM_Left; Type: QD000P40CD; Serial: TP:1477
- Measurement SW: DASY52, Version 52.10 (2);SEMCAD X Version 14.6.12 (7470)

Pin=100mW/Area Scan (71x71x1): Interpolated grid: dx=1.000 mm, dy=1.000 mm
Maximum value of SAR (interpolated) = 16.9 W/kg

Pin=100mW/Zoom Scan (7x7x7)/Cube 0: Measurement grid: dx=4mm, dy=4mm, dz=1.4mm
Reference Value = 67.93 V/m; Power Drift = 0.08 dB
Peak SAR (extrapolated) = 32.0 W/kg
SAR(1 g) = 8.1 W/kg; SAR(10 g) = 2.3 W/kg
Maximum value of SAR (measured) = 19.9 W/kg

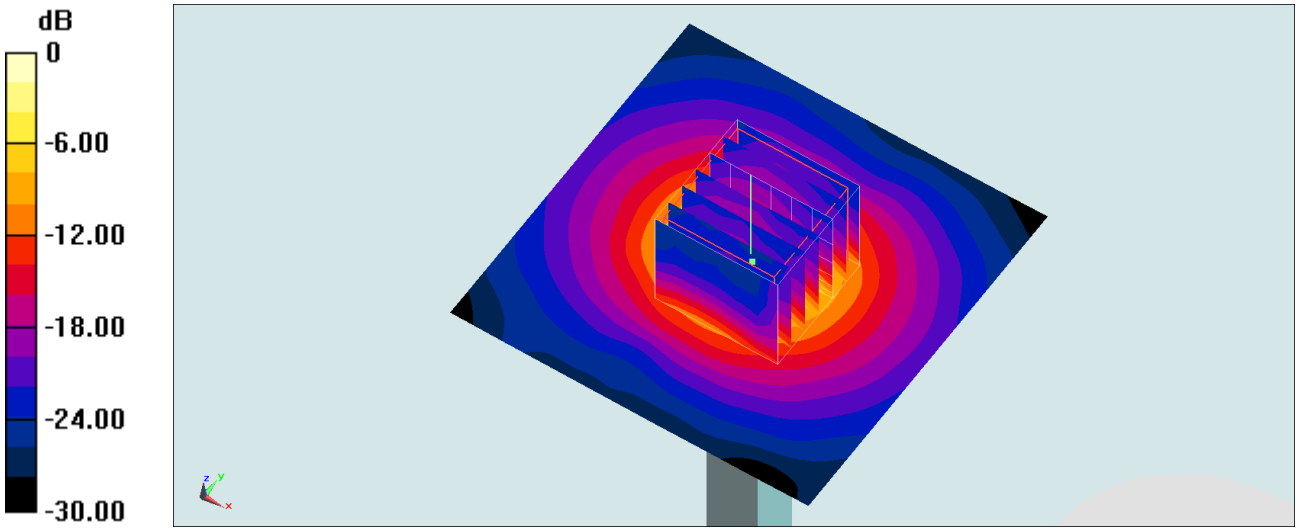

0 dB = 19.9 W/kg = 12.99 dBW/kg

Test Laboratory: Sporton International Inc. SAR/HAC Testing Lab Date: 2020.2.21

System Check_Head_5250MHz

DUT: D5GHzV2-1128

Communication System:CW; Frequency: 5250 MHz;Duty Cycle: 1:1
Medium: HSL_5000 Medium parameters used: f = 5250 MHz; σ = 4.646 S/m; ε_r = 36.561; ρ = 1000 kg/m^3
Ambient Temperature：23.2 ℃； Liquid Temperature：22.6 ℃

DASY5 Configuration:
- Probe: EX3DV4 - SN3857; ConvF(5.19, 5.19, 5.19); Calibrated: 2019.5.27
- Sensor-Surface: 1.4mm (Mechanical Surface Detection)
- Electronics: DAE4 Sn1210; Calibrated: 2019.7.23
- Phantom: SAM1; Type: SAM; Serial: 1697
- Measurement SW: DASY52, Version 52.10 (1); SEMCAD X Version 14.6.11 (7439)

Pin=100mW/Area Scan (71x71x1): Interpolated grid: dx=1.000 mm, dy=1.000 mm
Maximum value of SAR (interpolated) = 18.8 W/kg

Pin=100mW/Zoom Scan (8x8x7)/Cube 0: Measurement grid: dx=4mm, dy=4mm, dz=1.4mm
Reference Value = 43.27 V/m; Power Drift = 0.04 dB
Peak SAR (extrapolated) = 30.7 W/kg
SAR(1 g) = 7.86 W/kg; SAR(10 g) = 2.29 W/kg
Maximum value of SAR (measured) = 18.2 W/kg

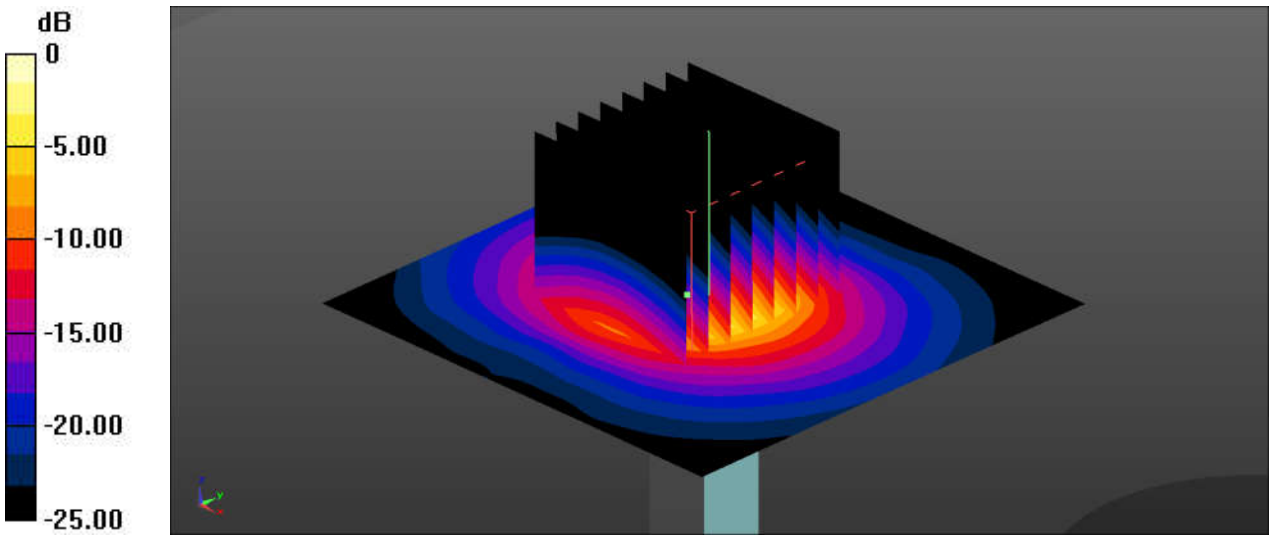

0 dB = 18.8 W/kg = 12.74 dBW/kg

System Check_Head_5600MHz

DUT: D5GHzV2-1006

Communication System: CW; Frequency: 5600 MHz;Duty Cycle: 1:1
Medium: HSL_5G_200221 Medium parameters used: f = 5600 MHz; σ = 4.95 S/m; ε_r = 36.492; ρ = 1000 kg/m^3
Ambient Temperature：23.6 ℃; Liquid Temperature：22.6 ℃

DASY5 Configuration:
- Probe: EX3DV4 - SN7346; ConvF(4.75, 4.75, 4.75) @ 5600 MHz; Calibrated: 2019/4/25
- Sensor-Surface: 1.4mm (Mechanical Surface Detection)
- Electronics: DAE4 Sn853; Calibrated: 2019/7/18
- Phantom: SAM_Left; Type: QD000P40CD; Serial: TP:1477
- Measurement SW: DASY52, Version 52.10 (2);SEMCAD X Version 14.6.12 (7470)

Pin=100mW/Area Scan (71x71x1): Interpolated grid: dx=1.000 mm, dy=1.000 mm
Maximum value of SAR (interpolated) = 21.5 W/kg

Pin=100mW/Zoom Scan (7x7x7)/Cube 0: Measurement grid: dx=4mm, dy=4mm, dz=1.4mm
Reference Value = 72.12 V/m; Power Drift = 0.05 dB
Peak SAR (extrapolated) = 39.0 W/kg
SAR(1 g) = 8.51 W/kg; SAR(10 g) = 2.35 W/kg
Maximum value of SAR (measured) = 21.6 W/kg

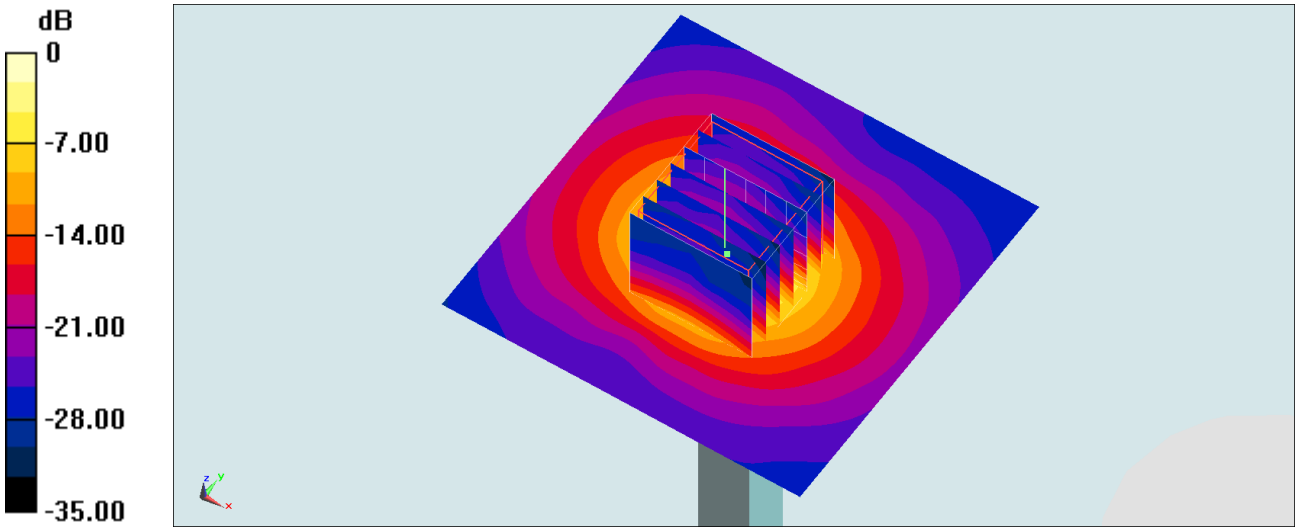

0 dB = 21.6 W/kg = 13.34 dBW/kg

Test Laboratory: Sporton International Inc. SAR/HAC Testing Lab Date: 2020.2.21

System Check_Head_5600MHz

DUT: D5GHzV2-1128

Communication System:CW; Frequency: 5600 MHz;Duty Cycle: 1:1
Medium: HSL_5000 Medium parameters used: f = 5600 MHz; σ = 5.004 S/m; ε_r = 36.061; ρ = 1000 kg/m^3
Ambient Temperature：23.2 ℃； Liquid Temperature：22.8 ℃

DASY5 Configuration:
- Probe: EX3DV4 - SN3857; ConvF(4.92, 4.92, 4.92); Calibrated: 2019.5.27
- Sensor-Surface: 1.4mm (Mechanical Surface Detection)
- Electronics: DAE4 Sn1210; Calibrated: 2019.7.23
- Phantom: SAM1; Type: SAM; Serial: 1697
- Measurement SW: DASY52, Version 52.10 (1); SEMCAD X Version 14.6.11 (7439)

Pin=100mW/Area Scan (71x71x1): Interpolated grid: dx=1.000 mm, dy=1.000 mm
Maximum value of SAR (interpolated) = 20.3 W/kg

Pin=100mW/Zoom Scan (8x8x7)/Cube 0: Measurement grid: dx=4mm, dy=4mm, dz=1.4mm
Reference Value = 41.55 V/m; Power Drift = 0.18 dB
Peak SAR (extrapolated) = 34.1 W/kg
SAR(1 g) = 7.97 W/kg; SAR(10 g) = 2.32 W/kg
Maximum value of SAR (measured) = 18.8 W/kg

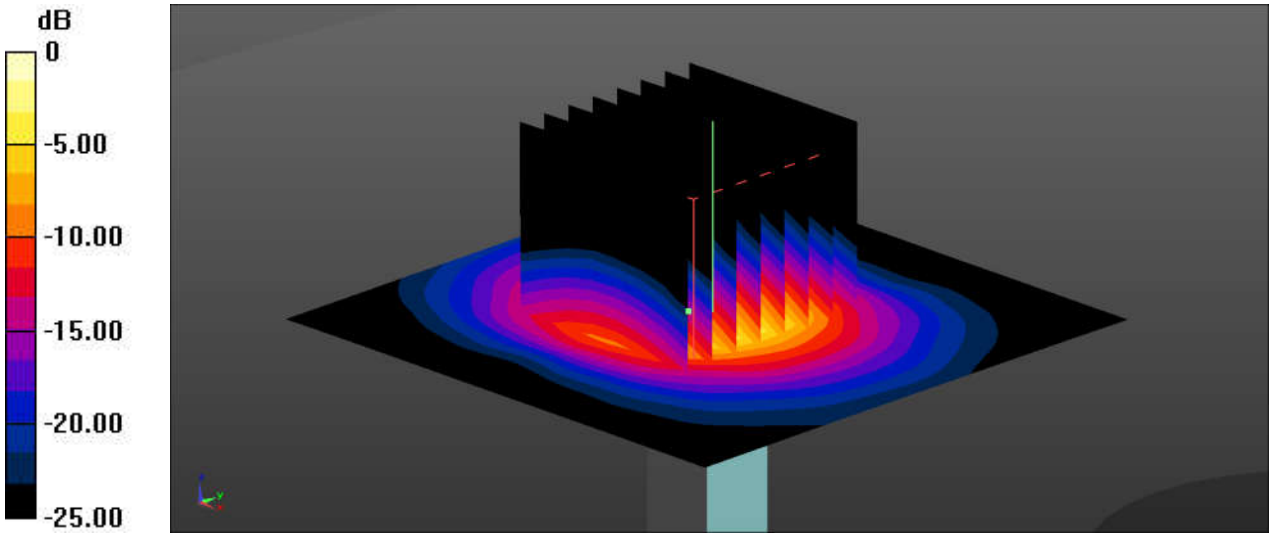

0 dB = 20.3 W/kg = 13.07 dBW/kg

System Check_Head_5750MHz

DUT: D5GHzV2-1006

Communication System: CW; Frequency: 5750 MHz;Duty Cycle: 1:1
Medium: HSL_5G_200221 Medium parameters used: f = 5750 MHz; σ = 5.107 S/m; ε_r = 36.358; ρ = 1000 kg/m^3
Ambient Temperature：23.6 ℃; Liquid Temperature：22.6 ℃

DASY5 Configuration:
- Probe: EX3DV4 - SN7346; ConvF(4.78, 4.78, 4.78) @ 5750 MHz; Calibrated: 2019/4/25
- Sensor-Surface: 1.4mm (Mechanical Surface Detection)
- Electronics: DAE4 Sn853; Calibrated: 2019/7/18
- Phantom: SAM_Left; Type: QD000P40CD; Serial: TP:1477
- Measurement SW: DASY52, Version 52.10 (2);SEMCAD X Version 14.6.12 (7470)

Pin=100mW/Area Scan (71x71x1): Interpolated grid: dx=1.000 mm, dy=1.000 mm
Maximum value of SAR (interpolated) = 19.4 W/kg

Pin=100mW/Zoom Scan (7x7x7)/Cube 0: Measurement grid: dx=4mm, dy=4mm, dz=1.4mm
Reference Value = 70.29 V/m; Power Drift = -0.02 dB
Peak SAR (extrapolated) = 36.6 W/kg
SAR(1 g) = 7.81 W/kg; SAR(10 g) = 2.24 W/kg
Maximum value of SAR (measured) = 20.8 W/kg

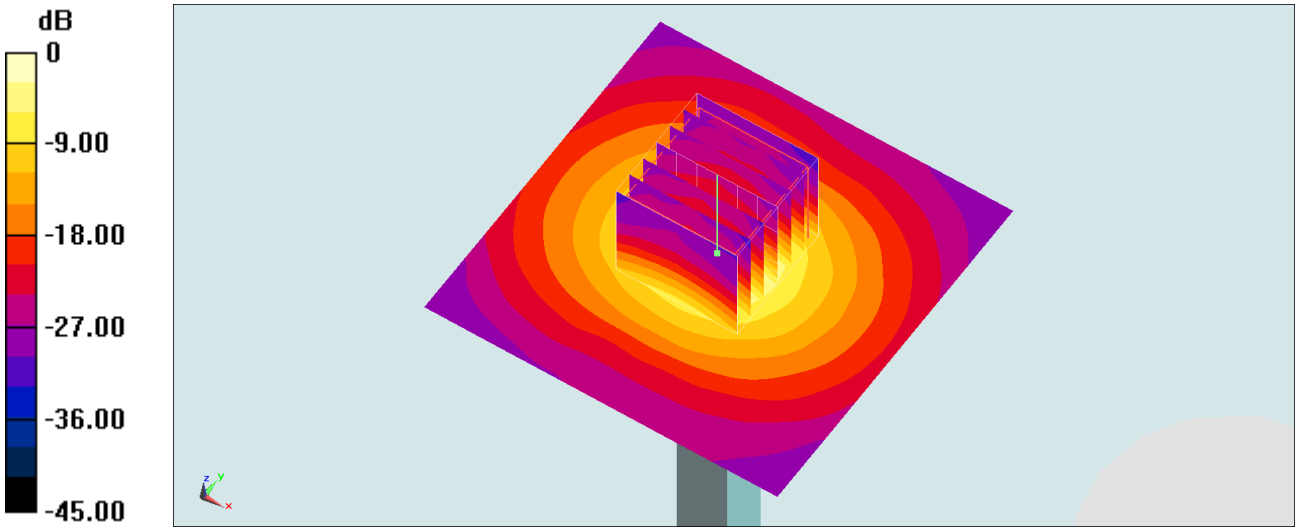

0 dB = 20.8 W/kg = 13.18 dBW/kg

Test Laboratory: Sporton International Inc. SAR/HAC Testing Lab Date: 2020.2.23

System Check_Head_5750MHz

DUT: D5GHzV2-1128

Communication System: CW; Frequency: 5750 MHz;Duty Cycle: 1:1
Medium: HSL_5000 Medium parameters used: f = 5750 MHz; σ = 5.16 S/m; ε_r = 35.846; ρ = 1000 kg/m^3
Ambient Temperature：23.2 ℃； Liquid Temperature：22.9 ℃

DASY5 Configuration:
- Probe: EX3DV4 - SN3857; ConvF(5.17, 5.17, 5.17); Calibrated: 2019.5.27
- Sensor-Surface: 1.4mm (Mechanical Surface Detection)
- Electronics: DAE4 Sn1210; Calibrated: 2019.7.23
- Phantom: SAM1; Type: SAM; Serial: 1697
- Measurement SW: DASY52, Version 52.10 (1); SEMCAD X Version 14.6.11 (7439)

Pin=100mW/Area Scan (71x71x1): Interpolated grid: dx=1.000 mm, dy=1.000 mm
Maximum value of SAR (interpolated) = 17.9 W/kg

Pin=100mW/Zoom Scan (8x8x7)/Cube 0: Measurement grid: dx=4mm, dy=4mm, dz=1.4mm
Reference Value = 38.16 V/m; Power Drift = 0.03 dB
Peak SAR (extrapolated) = 32.6 W/kg
SAR(1 g) = 7.32 W/kg; SAR(10 g) = 2.12 W/kg
Maximum value of SAR (measured) = 17.8 W/kg

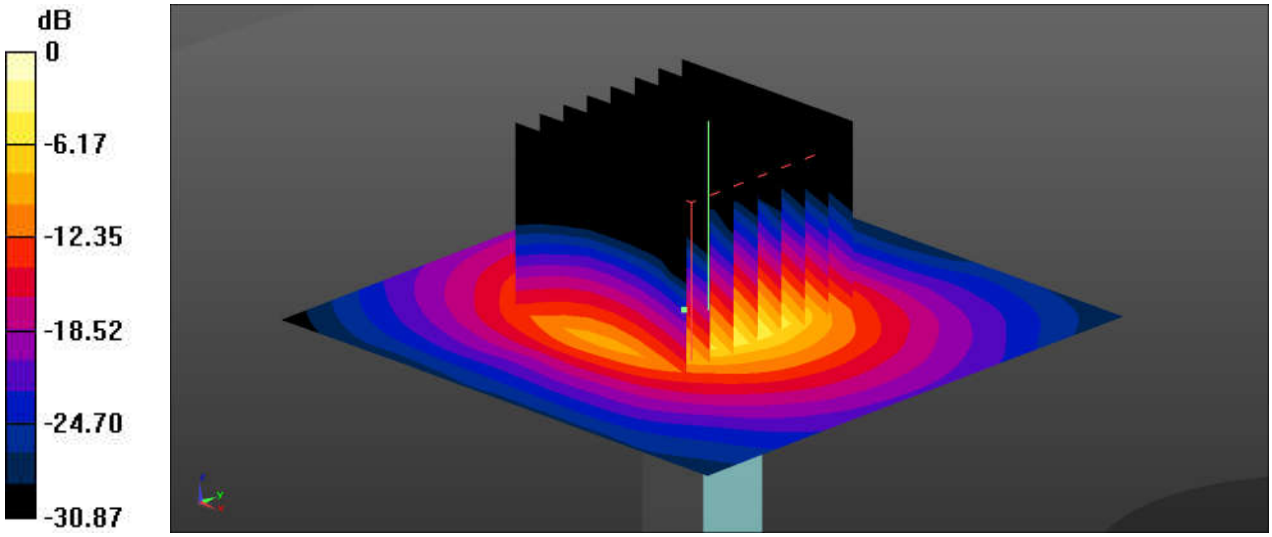

0 dB = 17.9 W/kg = 12.53 dBW/kg