Meshreen MS516x ZigBee Module
MS516x-Mxx series
Data Sheet

Meshreen

Content

1. Introduction 3
1.1 Variants 3
2. Specification 4
2.1 Pin configurations 5
2.2 Pin Assignment 6
2.3 .Pin Description 7
2.4 Power Supplies 7
3. Electrical Characteristics 8
3.1 Maximum Ratings 8
3.2 Operation Conditions 8
4. Outline Drawing 9
4.1 Module PCB Footprint 12
5. Optimal PCB placement of the MS5168-M00/M05 Module 13
6. Reflow Profile 14
6.1 Soldering Paste and Cleaning 14
7. Ordering Information 15
7.1 Label example: 15
8. Federal Communication Commission Interference Statement 16
9. Packing 18
10. RoHS Compliance 18
11. Disclaimers 19
12. Version Control 19

Figure 1 **Pin Configuration (top view)** 5
Figure 2 MS5168-M00 Outline Drawing 9
Figure 3 MS5168-M00 Outline Drawing 9
Figure 4 MS5168/MS5169-M03 outline drawing 10
Figure 5 MS5168-M04/M05 Outline Drawing 11
Figure 7 PCB footprint 12
Figure 8 Optimal PCB placement 13
Figure 9 Module Reflow profile reference 14

Table 1 Meshreen module variants 3
Table 2 Module specification 4
Table 3 Pin Assignment 6
Table 4 Maximum Ratings 8
Table 5 Operation Conditions 8

1. Introduction

The MS5168-001-Myy family is a range of ultra-low power, high performance surface mount modules targeted at IEEE 802.15.4, JenNet-IP, ZigBee Light Link, ZigBee Smart Energy and RF4CE networking applications, enabling users to realize products with minimum time to market and at the lowest cost. They remove the need for expensive and lengthy development of custom RF board designs and test suites. The modules use NXP's MS5168 wireless microcontroller to provide a comprehensive solution with large memory, high CPU and radio performance and all RF components included. All that is required to develop and manufacture wireless control or sensing products is to connect a power supply and peripherals such as switches, actuators and sensors, considerably simplifying product development.

2.1 Variants

Module	Chip	Power	Antenna	Dimension(mm)	Certification
MS5168-M00	JN5168-001	Standard	PCB Antenna	30x16x2.8	FCC
MS5168-M03	JN5168-001	Standard	u-FL connector	21x16x2.8	FCC
MS5168-M04	JN5168-001	High	u-FL connector	30x16x2.8	FCC
MS5168-M14	JN5168-001	High	u-FL connector	30x16x2.8	FCC/CE
MS5168-M05	JN5168-001	High	PCB Antenna	30x16x2.8	FCC
MS5169-M03	JN5169-001	Middle	u-FL Connector	21x16x2.8	FCC

Table 1 Meshreen module variants

2. Specification

There are differences between modules, the parameters are defined here.

VDD=3.3V @ +25°C

Typical DC Characteristics					Notes
	M00/03	**M04/05**	**M14**	**MS5169-M03**	
Deep sleep current	100nA	100nA	100nA	100nA	
Sleep Current	0.70uA	0.70µA	0.70µA	0.73µA	With active sleep timer
Radio Transmit current	15.3mA	150mA	150mA	23.3mA	CPU + Protocol + radio transmitting
Radio receive current	17mA	22mA	22mA	15mA	CPU in doze + radio receiving
Centre frequency accuracy	+/-10ppm	+/-10ppm	+/-10ppm	+/-10ppm	Additional +/-15ppm allowance for temperature and ageing
Typical RF Characteristics					**Notes**
Receive sensitivity	-95dBm	-100dBm	-98dBm	-95dBm	Nominal for 1% PER, as per 802.15.4 section 6.5.3.3 (Note 1)
Maximum Transmit power	+0dBm	+18dBm	+6dBm(Power Level=2)	+9dBm	
Maximum input signal	10dBm	+5dBm	+5dBm	+10dBm	For 1% PER, measured as sensitivity
RSSI range (dBm)	-95 ~ -10dBm	-105 ~ -20	-105 ~ -20	-95~-10dBm	
RF Port impedance – SMA/uFl connector	50 ohm	50 ohm	50 ohm	50 ohm	2.4 - 2.5GHz
Rx Spurious Emissions	-61dBm	-69dBm	-69dBm	-70dBm	Measured conducted into 50 ohms
Tx Spurious Emissions	-40dBm	-49dBm	-49dBm	--65dBm	Measured conducted into 50 ohms
VSWR (max)	2:1	2:1	2:1	2:1	2.4 - 2.5GHz
Peripherals					**Notes**
Master SPI port	3 selects		3 selects		250kHz - 16MHz
Slave SPI port	√		√		250kHz - 8MHz
Two UARTs	√		√		16550 compatible
Two-wire serial I/F (compatible with SMbus & I^2C)	√		√		Up to 400kHz
5 x PWM (4 x timer, 1x timer/counter)	√		√		16MHz clock
Two programmable Sleep Timers	√		√		32kHz clock
Digital IO lines (multiplexed with UARTs, timers and SPI selects)	20		18		
Four channel Analogue-to-Digital converter	√		√		10-bit, up to 100ks/s
Programmable analogue comparators	√		√		Ultra low power mode for sleep
Internal temperature sensor and battery monitor	√		√		

Table 2 Module specification

2.1. Pin configurations

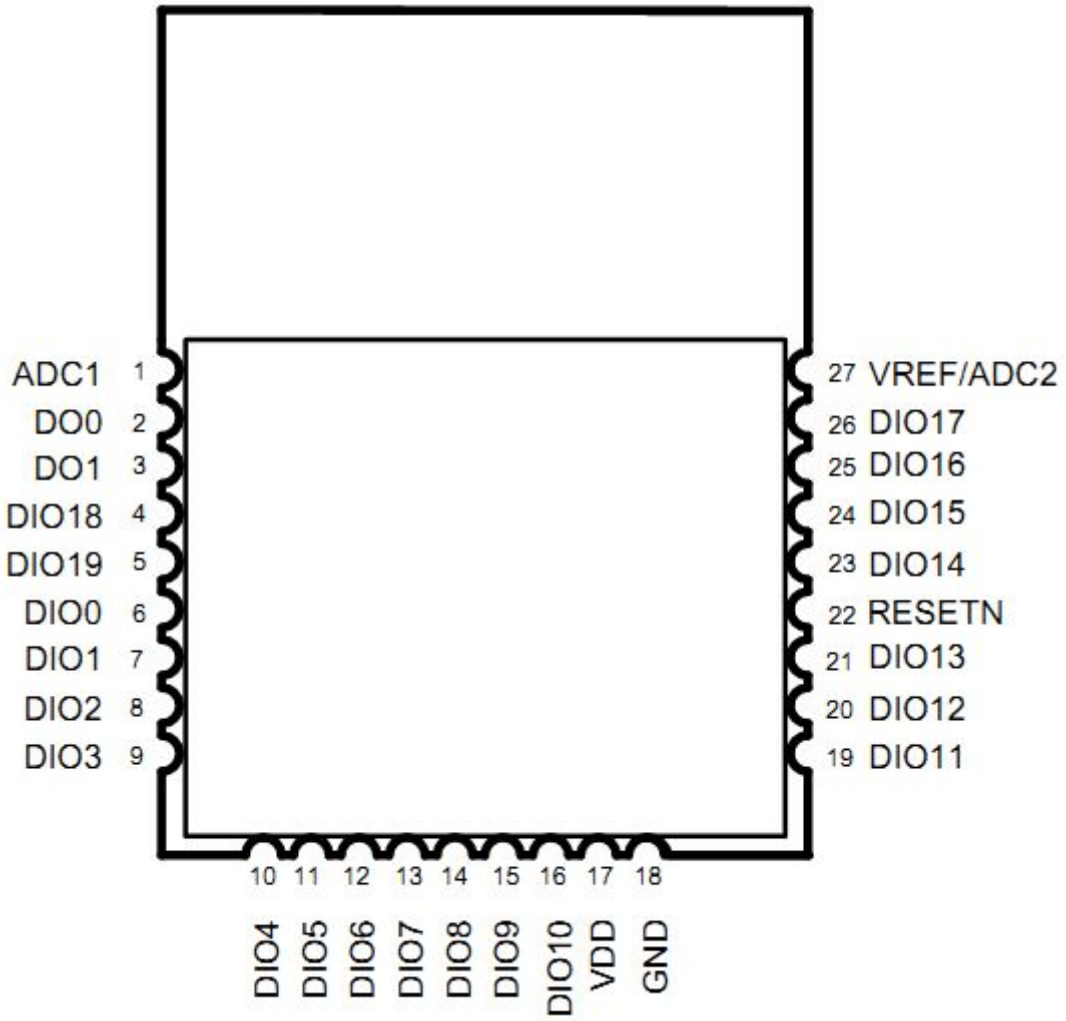

Figure 1 **Pin Configuration (top view)**

Note that the same basic pin configuration applies for all module designs. However, DIO3(pin9) and DIO2(pin8) are not available on the high power modules.

2.2. Pin Assignment

Pin No	Pin Functions						
	Primary	Alternate Functions				Signal Type	Description
1	ADC1					3.3V	Analogue to Digital Input
2	DO0	SPICLK			PWM2	CMOS	SPI Master Clock Output or PWM2 Output
3	DO1	SPIMISO			PWM3	CMOS	SPI Master In Slave Out Input or PWM3 Output
4	DIO18	SPIMOSI				CMOS	SPI Master Out Slave In Output
5	DIO19	SPISEL0				CMOS	SPI Select From Module – SS0 Output Output
6	DIO0	SPISEL1	ADC3			CMOS	DIO0, SPI Slave Select Output 1 or ADC input 3
7	DIO1	SPISEL2	ADC4	PC0		CMOS	DIO1, SPI Slave Select Output 2, ADC input 4 or Pulse Counter 0 input
8	DIO2*		RFRX	TIM0CK_GT		CMOS	DIO2, Radio Receive Control Output or Timer0 Clock/Gate Input
9	DIO3*		RFTX	TIM0CAP		CMOS	DIO3, Radio Transmit Control Output or Timer0 Capture Input
10	DIO4	CTS0	JTAG_TCK	TIM0OUT	PC0	CMOS	DIO4, UART 0 Clear To Send Input, JTAG CLK Input, Timer0 PWM output, or Pulse Counter 0 Input
11	DIO5	RTS0	JTAG_TMS	PWM1	PC1	CMOS	DIO5, UART 0 Request To Send Output, JTAG Mode Select Input, PWM1 Output or Pulse Counter 1 Input
12	DIO6	TXD0	JTAG_TDO	PWM2		CMOS	DIO6, UART 0 Transmit Data Output, JTAG Data Output or PWM2 Output
13	DIO7	RXD0	JTAG_TDI	PWM3		CMOS	DIO7, UART 0 Receive Data Input, JTAG Data Input or PWM 3 Output
14	DIO8	TIM0CK_GT	PC1	PWM4		CMOS	DIO8, Timer0 Clock/Gate Input, Pulse Counter1 Input or PWM 4 Output
15	DIO9	TIM0CAP	32KXTALIN	RXD1	32KIN	CMOS	DIO9, Timer0 Capture Input, 32K External Crystal Input, UART 1 Receive Data Input or 32K External Clock Input
16	DIO10	TIM0OUT	32KXTALOUT			CMOS	DIO10, Timer0 PWM Output or 32K External Crystal Output
17	VDD					3.3V	Supply Voltage
18	GND					0V	Digital Ground
19	DIO11	PWM1		TXD1		CMOS	DIO11, PWM1 Output or Timer1 Data Output
20	DIO12	PWM2	CTS0	JTAG_TCK	ADO or SPISMOSI	CMOS	DIO12, PWM2 Output, UART0 Clear To Send Input, JTAG CLK Input, Antenna Diversity Odd Output or SPI Slave Master Out Slave In Input
21	DIO13	PWM3	RTS0	JTAG_TMS	ADE or SPIMISO	CMOS	DIO13, PWM3 Output, UART0 Request To Send Output, JTAG Mode Select Input, Antenna Diversity Even output or SPI Slave Master In Slave Out Output
22	RESETN					CMOS	Reset input
23	DIO14	SIF_CLK	TXD0 TXD1	JTAG_TDO	SPISEL1 or SPISSEL	CMOS	DIO14, Serial Interface Clock, UART 0 Transmit Data Output, UART1 Transmit Data Output, JTAG Data Output, SPI Master Select Output 1 or SPI Slave Select Input
24	DIO15	SIF_D	RXD0 RXD1	JTAG_TDI	SPISEL2	CMOS	DIO15, Serial Interface Data or Intelligent Peripheral Data Out
25	DIO16	COMP1P	SIF_CLK	SPISMOSI		CMOS	DIO16, Comparator Positive Input, Serial Interface clock or SPI Slave Master Output Slave In Input
26	DIO17	COMP1M	PWM4	I2C DATA	SPISIMO	CMOS	DIO17, Comparator Negative Input, Serial Interface Data or SPI Slave Master In Slave Out Output
27	ADC2					3.3V	Analogue to Digital Input

Table 3 Pin Assignment

*These two pins are not connected for JN5168-001-M04 & JN5168 -001-M05 modules.

2.3. Pin Description

All pins behave as described in the DS- MS5168 Wireless Microcontroller Datasheet, with the exception of the following:

2.4. Power Supplies

A single power supply pin, 3.3V VDD is provided.

2.5. MS5168-M00/M03 Function Block

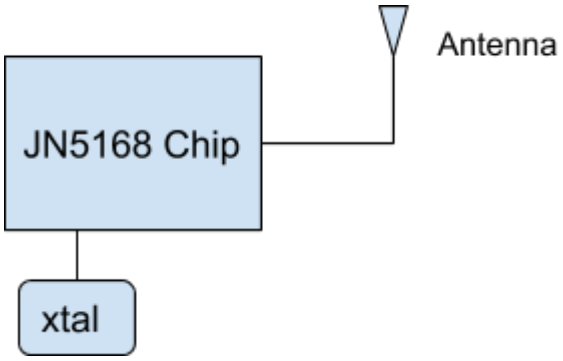

2.6. MS5169-M03 Function Block

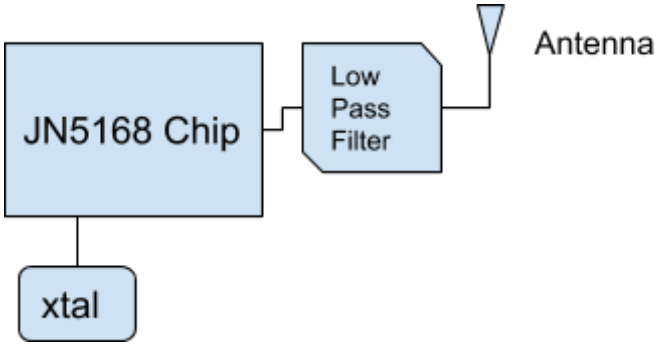

2.7. MS5168-M04/M05/M14 Function Block

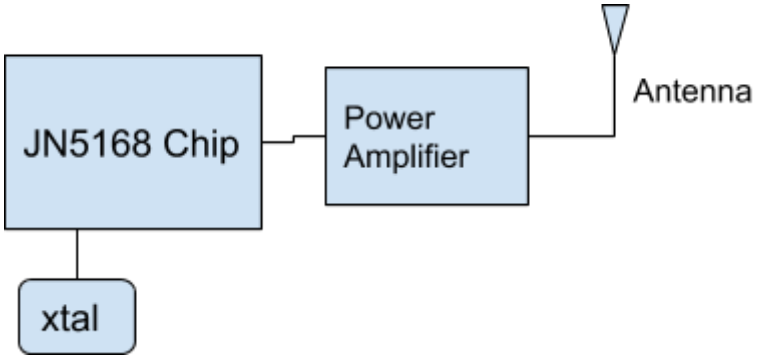

3 Electrical Characteristics

In most cases, the Electrical Characteristics are the same for both module and chip. They are described in detail in the chip datasheet. Where there are differences, they are detailed below

3.1 Maximum Ratings

Exceeding these conditions will result in damage to the device.

Parameter	Min	Max
Device supply voltage VDD	-0.3V	3.6V
All Pins	-0.3V	VDD + 0.3V
Storage temperature	-40°C	150°C

Table 4 Maximum Ratings

3.2 Operation Conditions

Supply	Min	Max
VDD	2.0V	3.6V
Ambient temperature range	-40˚C	85˚C

Table 5 Operation Conditions

4. Outline Drawing

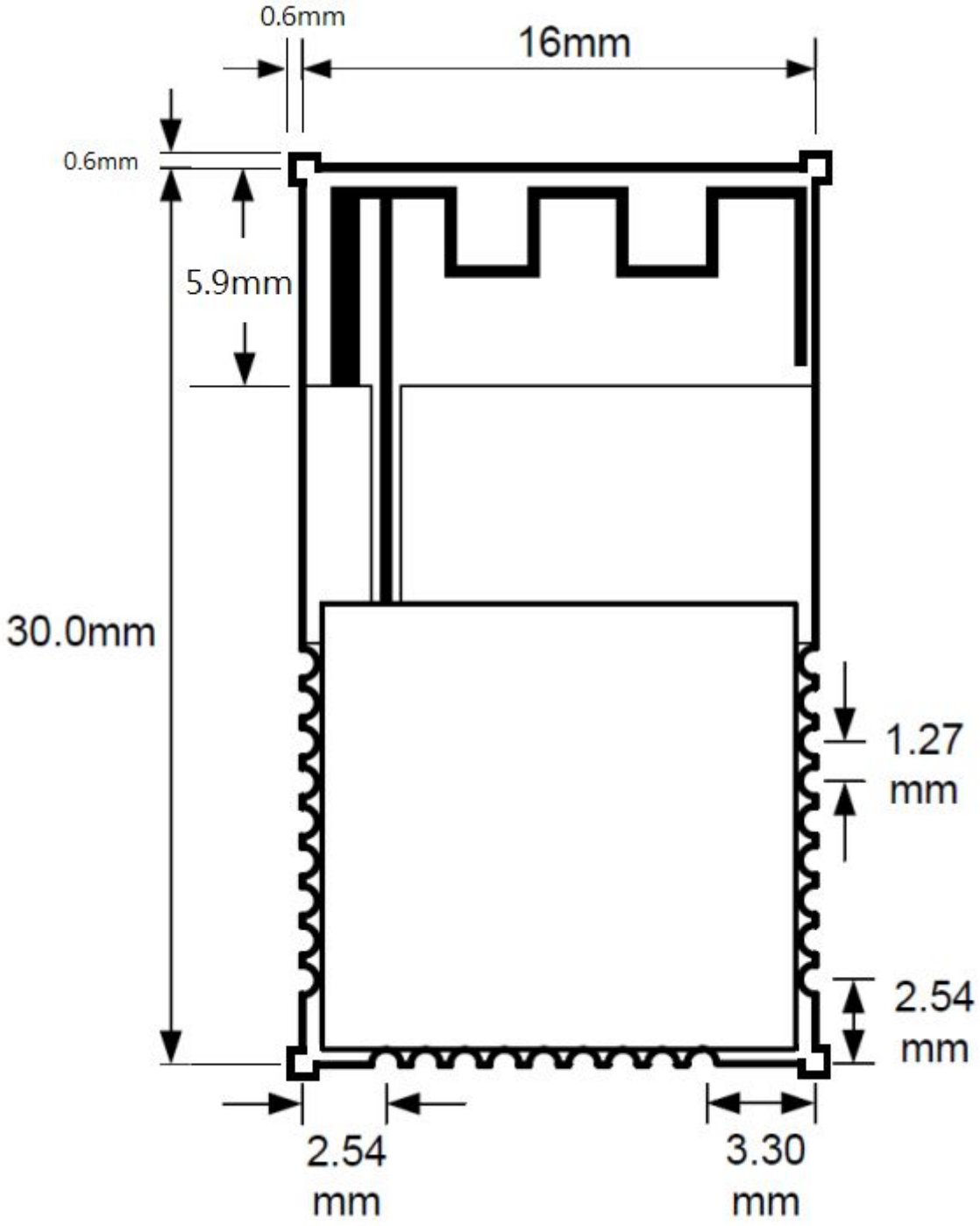

Thickness: 2.8mm
Four corner of PCB are PCB V-Cut tolerance

Figure 3 MS5168-M00 Outline Drawing

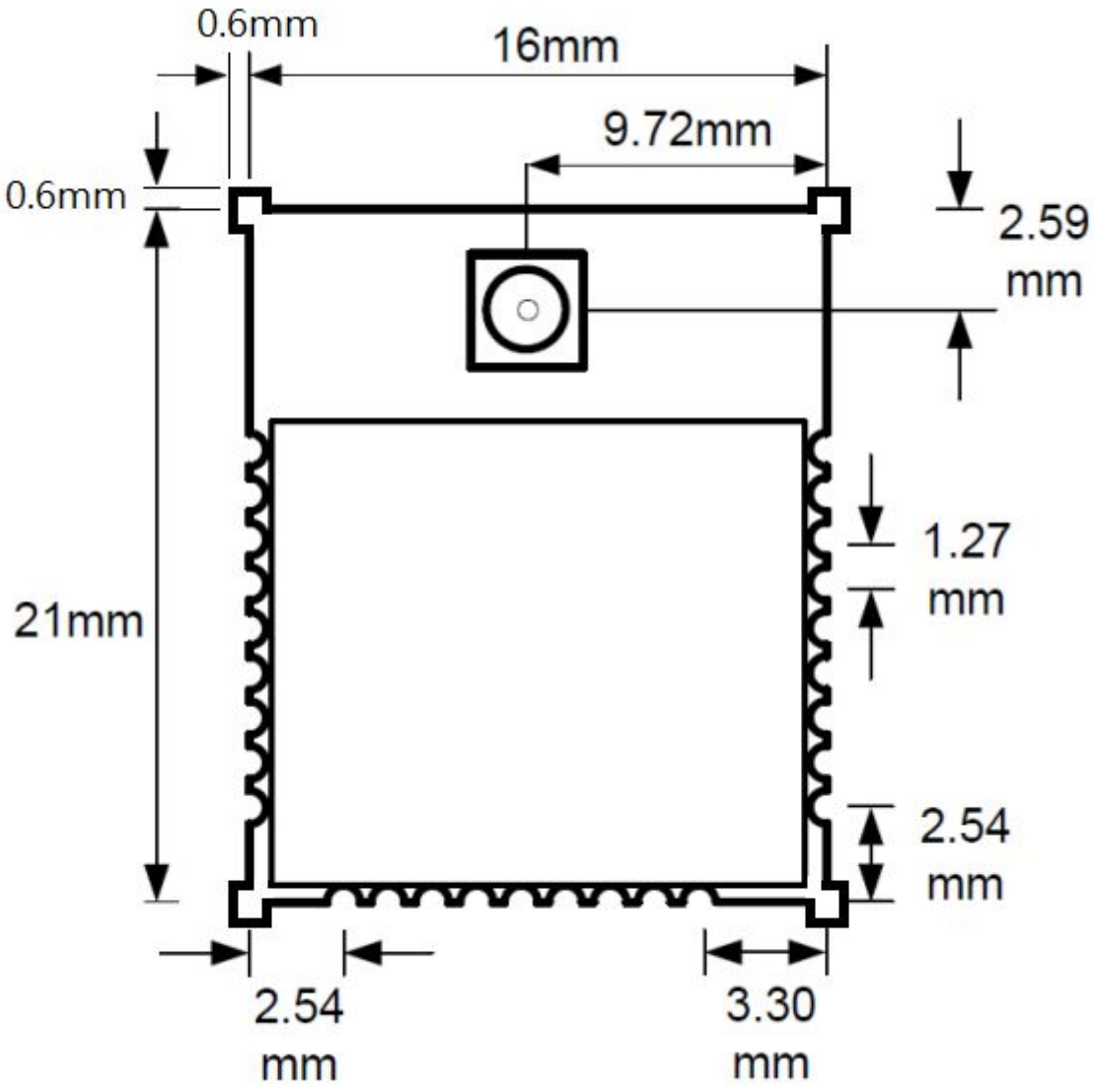

Thickness: 2.8mm
Four corner of PCB are PCB V-Cut tolerance

Figure 4 MS5168/MS5169-M03 outline drawing

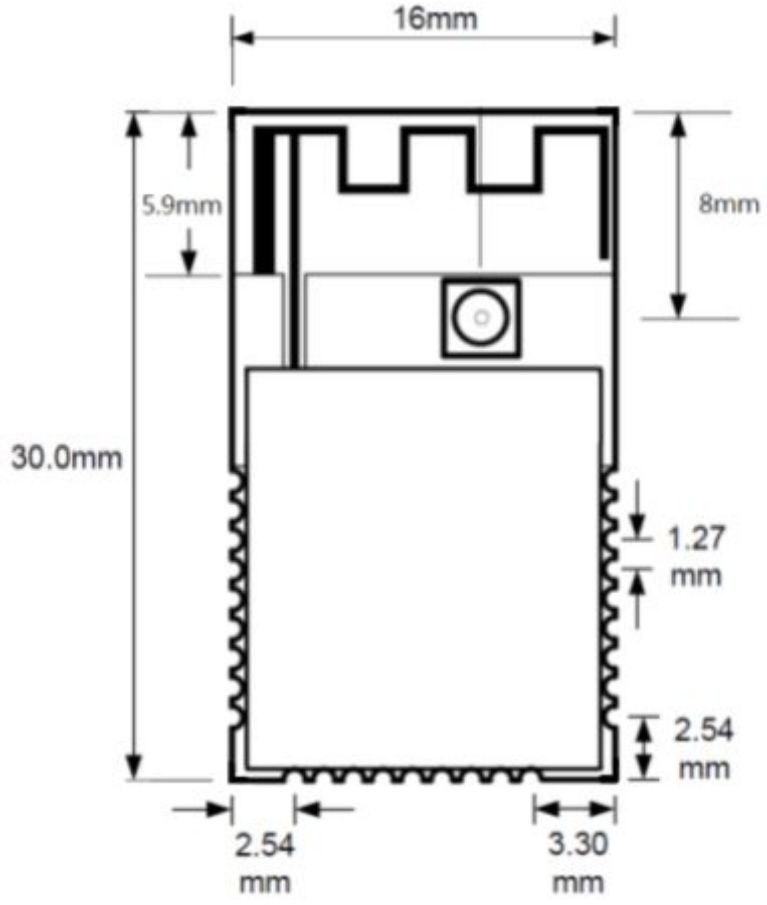

Thickness: 2.8mm
Four corner of PCB are PCB V-Cut tolerance

Figure 5 MS5168-M04/M05/M14 Outline Drawing

4.1. Module PCB Footprint

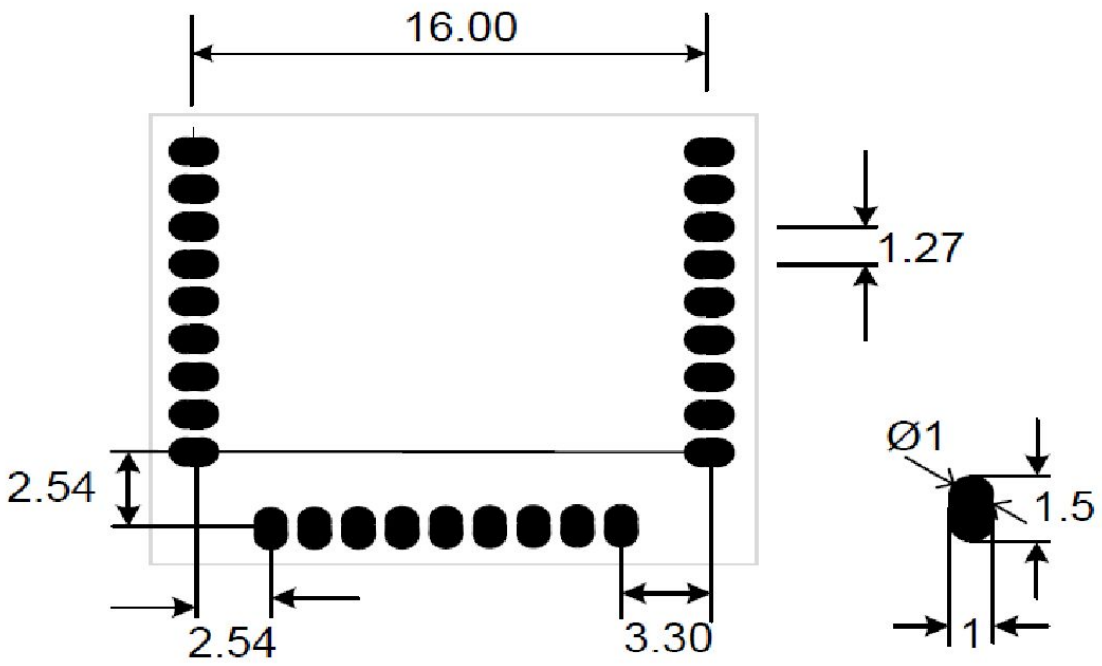

Note 1: All modules have the same footprint
Note 2: All Dimensions are mm
Figure 6 PCB footprint

5. Optimal PCB placement of the MS5168-M00/M05 Module

The JN5168-M00/M05 module features an optimized, low cost, integrated, inverted F, printed PCB antenna. The antenna has a vertically polarized near omnidirectional radiation pattern and up to 1.6 dBi of peak gain. The PCB design has been elongated in order to increase the ground plane area which increases the antenna efficiency. This allows standalone operation without any additional ground plane however care must be taken when mounting this module onto another PCB. The area around the antenna must be kept clear of conductors or other metal objects for an absolute minimum of 20 mm. This is true for all layers of the PCB and not just the top layer. Any conductive objects close to the antenna could severely disrupt the antenna pattern resulting in deep nulls and high directivity in some directions.

The diagrams below show various possible scenarios. The top 3 scenarios are correct; ground plane may be placed beneath MS5168-M00/M05 module as long as it does not protrude beyond the edge of the top layer ground plane on the module PCB.

The bottom 3 scenarios are incorrect; the left hand side example because there is ground plane underneath the antenna, the middle example because there is insufficient clearance around the antenna (it is best to have no conductors anywhere near the antenna), finally the right hand example has a battery's metal casing in the recommended keep out area.

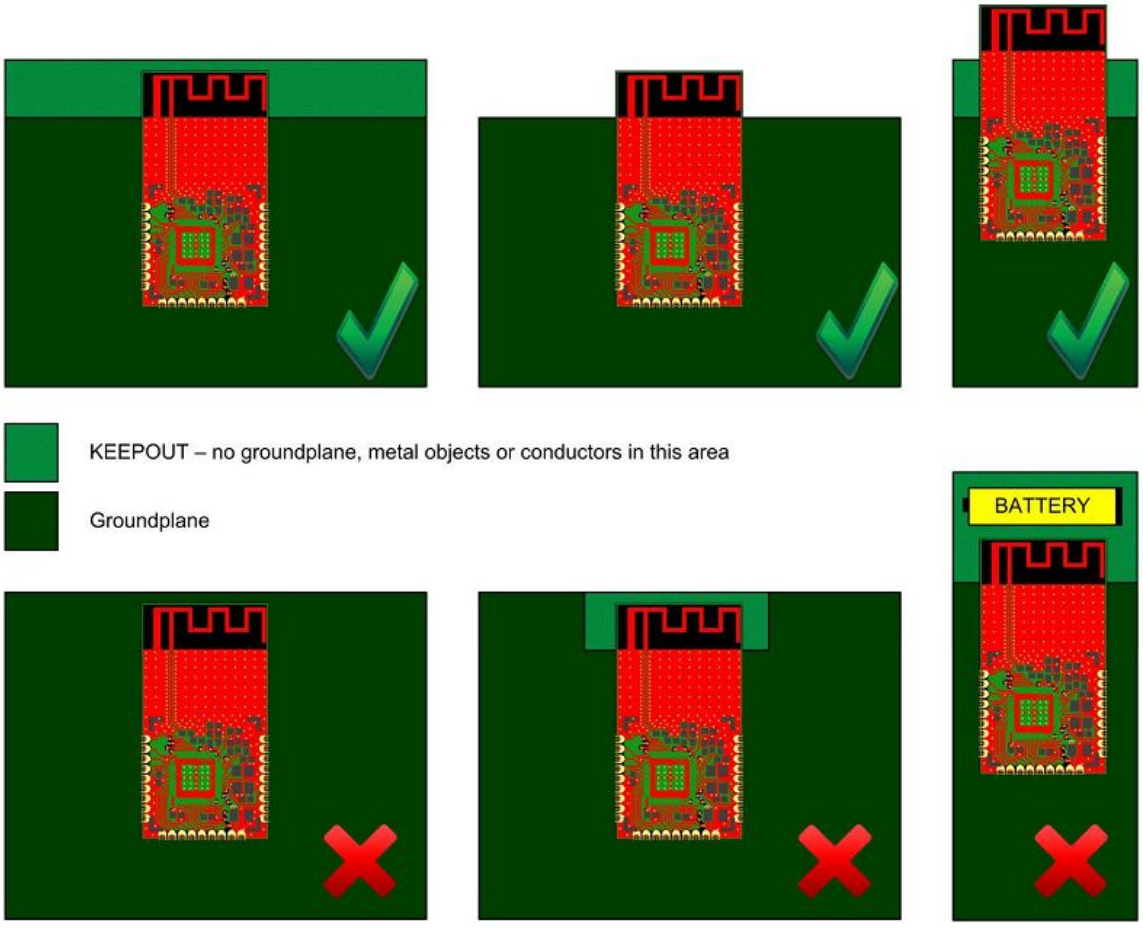

Figure 7 Optimal PCB placement

Note: The antenna radiation pattern is same as JN5168-001-M00

6. Reflow Profile

For reflow soldering, it is recommended to follow the reflow profile in figure 6 as a guide, as well as the paste manufacturer's guidelines on peak flow temperature, soak times, time above liquid and ramp rates.

Profile Feature	Sn-Pb Eutectic Assembly	Pb-Free Assembly
Average Ramp-Up Rate (Ts_{max} to Tp)	3 °C/second max.	3° C/second max.
Preheat – Temperature Min (Ts_{min}) – Temperature Max (Ts_{max}) – Time (ts_{min} to ts_{max})	100 °C 150 °C 60-120 seconds	150 °C 200 °C 60-180 seconds
Time maintained above: – Temperature (T_L) – Time (t_L)	183 °C 60-150 seconds	217 °C 60-150 seconds
Peak/Classification Temperature (Tp)	235℃	245℃
Time within 5 °C of actual Peak Temperature (tp)	10-30 seconds	20-40 seconds
Ramp-Down Rate	6 °C/second max.	6 °C/second max.
Time 25 °C to Peak Temperature	6 minutes max.	8 minutes max.

Note 1: All temperatures refer to topside of the package, measured on the package body surface.

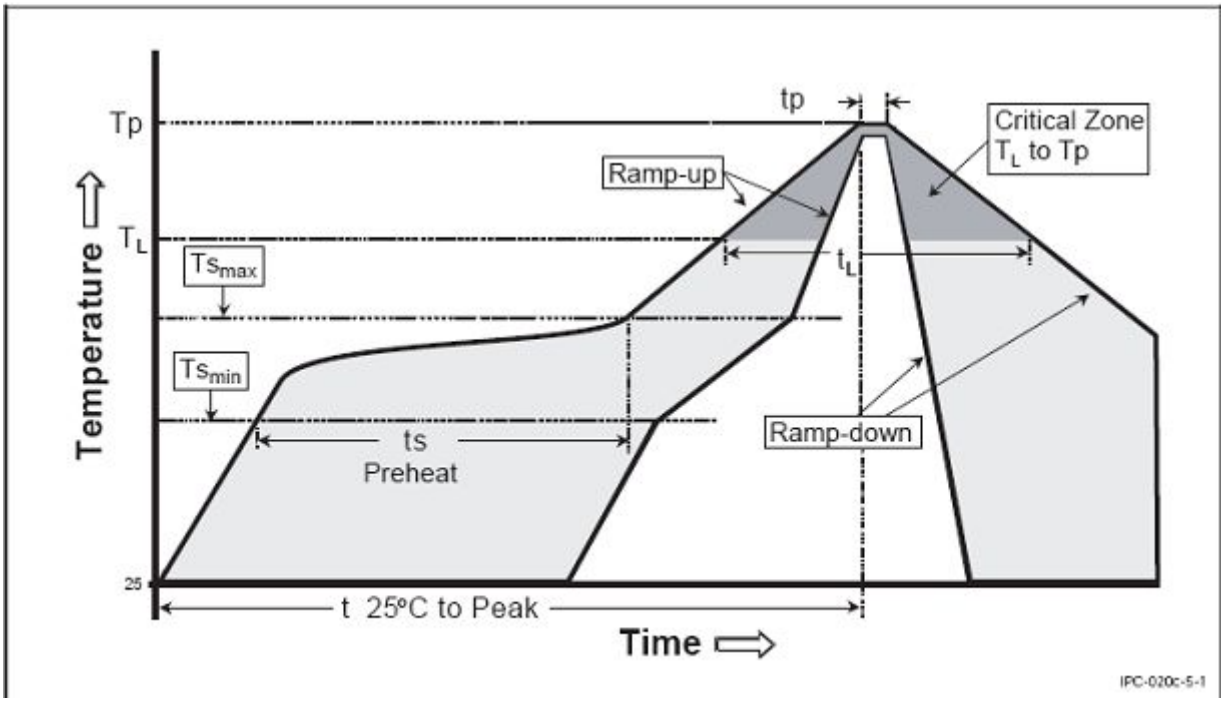

Figure 8 Module Reflow profile reference

6.1. Soldering Paste and Cleaning

Meshreen does not recommend use of a solder paste that requires the module and PCB assembly to be cleaned (rinsed in water) for the following reasons:
Solder flux residues and water can be trapped by the PCB, can or components and result in short circuits.
The module label could be damaged or removed.
MESHREEN recommends use of a 'no clean' solder paste for all its module products.

7. Ordering Information

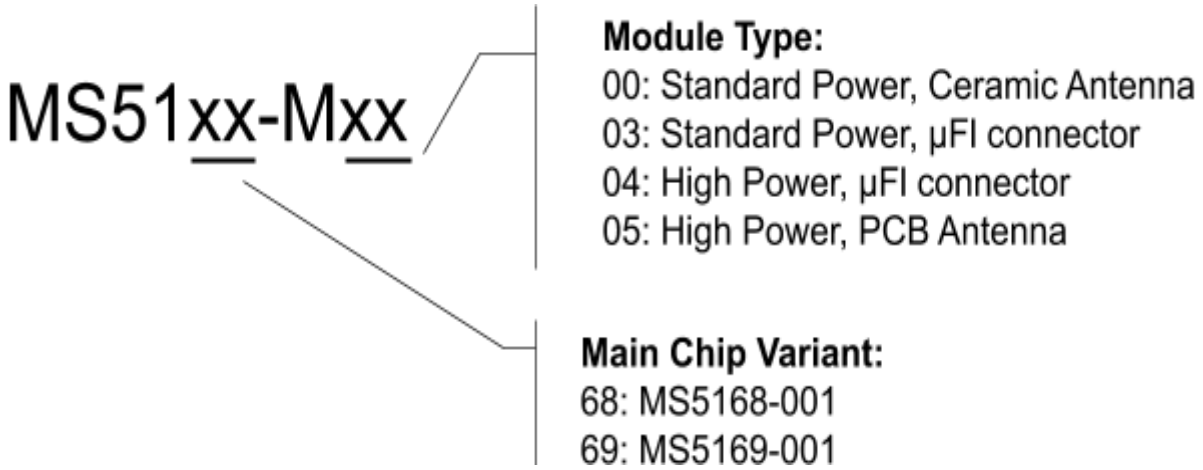

7.1. Label example:

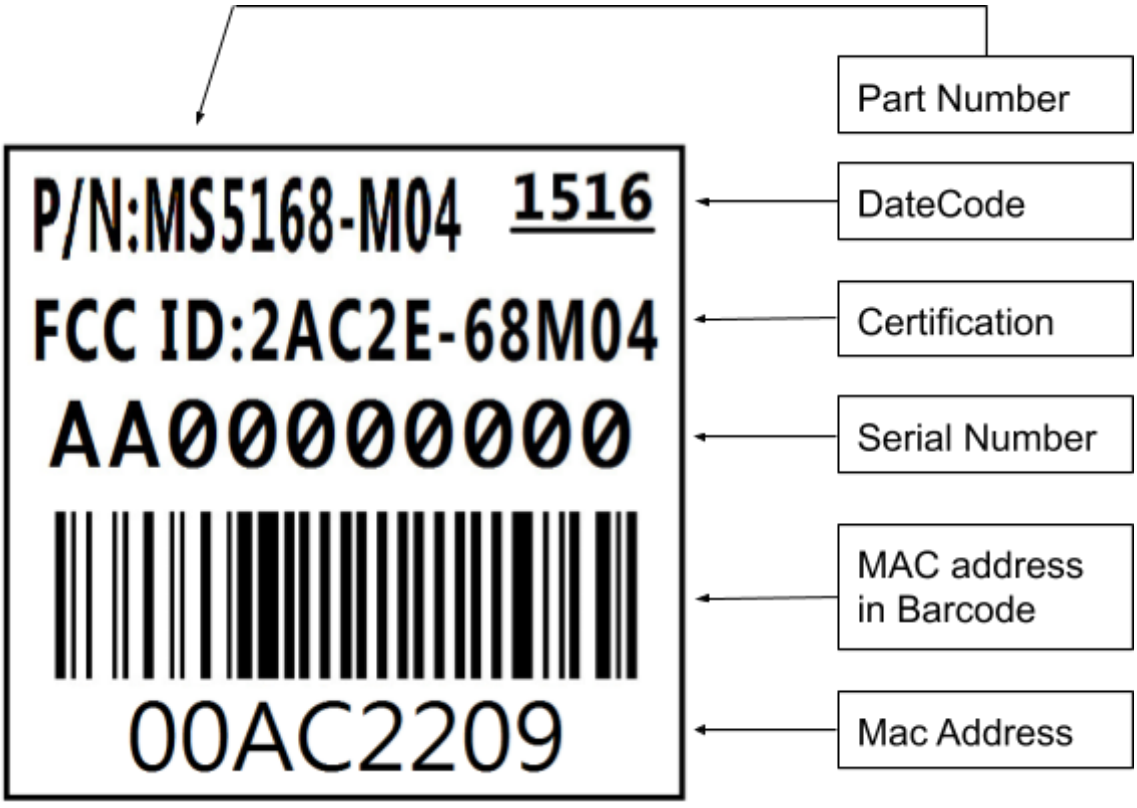

8. Federal Communication Commission Interference Statement

Any changes or modifications not expressly approved by the party responsible compliance could void your authority to operate the equipment.
Note: This equipment has been tested and found to comply with the limits for a Class B digital device, pursuant to part 15 of the FCC Rules. These limits are designed to provide reasonable protection against harmful interference in a residential installation. This equipment generates uses and can radiate radio frequency energy and, if not installed and used in accordance with the instructions, may cause harmful interference to radio communications. However, there is no guarantee that interference will not occur in a particular installation. If this equipment does cause harmful interference to radio or television reception, which can be determined by turning the equipment off and on, the user is encouraged to try to correct the interference by one or more of the following measures:
—Reorient or relocate the receiving antenna.
—Increase the separation between the equipment and receiver.
—Connect the equipment into an outlet on a circuit different from that to which the receiver is connected.
—Consult the dealer or an experienced radio/TV technician for help.
Notice:
This device complies with Part 15 of the FCC Rules. Operation is subject to the following two conditions:
(1) This device may not cause harmful interference and
(2) This device must accept any interference received, including interference that may cause undesired operation.
RF Radiation Exposure Statement
1. This Transmitter must not be collocated or operating in conjunction with any other antenna or transmitter.
2. This equipment complies with FCC RF radiation exposure limits set forth for an uncontrolled environment. This equipment should be installed and operated with a minimum distance of 20 centimeters between the radiator and your body.
As long as the above condition is met, further transmitter testing will not be required. However, the OEM integrator is still responsible for testing their end product for any additional compliance requirements required with this module installed (for example, digital device emissions, PC peripheral requirements, etc.). This applies to the MS5168-M00 and MS5168-M03 devices; the MS5168-M04 and MS5168-M05 are mobile devices (see below)
High Power Module usage limitation
The high power module variants are classified as 'mobile' device pursuant with FCC § 2.1091 and must not be used at a distance of < 20 cm (8") from any people. This applies to the MS5168-M14 and MS5168-M00 module type (2AC2E-68M14) (2AC2E-68M00).

IMPORTANT NOTE: In the event that these conditions cannot be met (for certain configurations or co-location with another transmitter), then the FCC authorization is no longer considered valid and the FCC ID cannot be used on the final product. In these circumstances, the OEM integrator will be responsible for re-evaluating the end product (including the transmitter) and obtaining a separate FCC authorization.
The OEM integrator has to be aware not to provide information to the end user regarding how to install or remove this RF module in the user manual of the end product. The user manual for the end product must include the following information in a prominent location; "To comply with FCC's RF radiation exposure requirements, the antenna(s) used for this transmitter must not be co-located or operating in conjunction with any other antenna or transmitter."
FCC End Product Labeling
The final 'end product' should be labeled in a visible area with the following: "Contains TX FCC ID: .2AC2E-68M00 or 2AC2E-68M14." to reflect the version of the module being used inside the product.

8.1. Antenna Specification

Model: MS5168-M05 and MS5168-M00 uses PCB antenna. Antenna Gain: 1.6 dBi
Model: MS5168-M04 and MS5168-M14 uses external antenna (u-FL connector). Antenna Gain: 2.43 dBi
Modulation Type: O-QPSK
Frequency: 2405~2480MHz
CH Numbers: step 5MHz

9. Packing

For All models are packing in one size Tray, the Tray dimension is below.

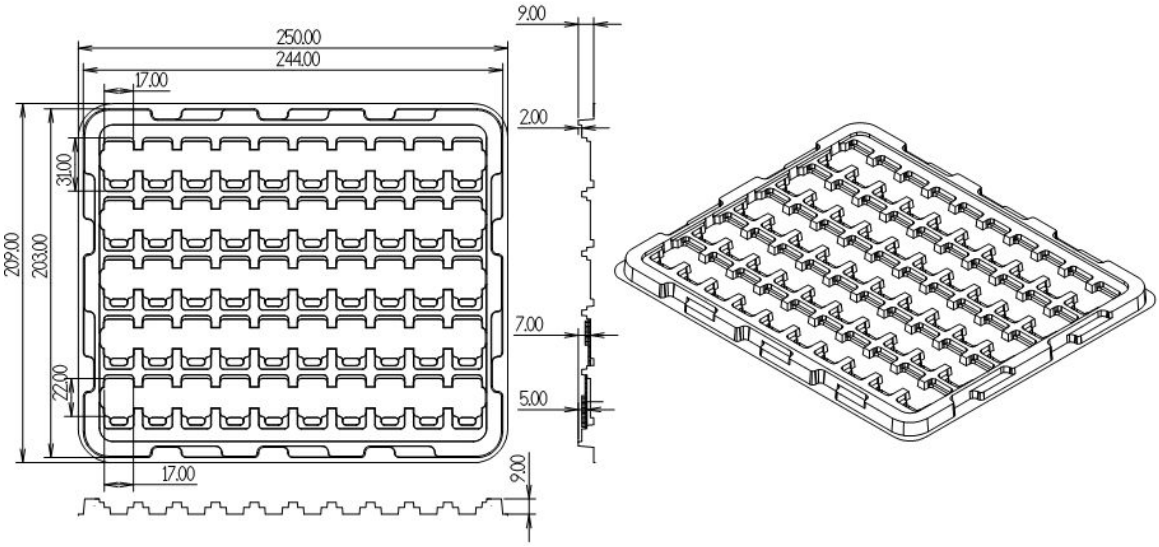

The standard packing is base on 500 pcs, use 11 trays which include cover.
All modules will packing in vacuum packing bag which include trays, humidity indicator card, desiccant.

9.1. Net weight and Gross weight

Weight	MS5168-M00	MS5168-M03	MS5169-M03	MS5168-M04	MS5168-M05
Net Weight	T.B.D.	T.B.D.	T.B.D.	1.92 g	T.B.D.
Gross Weight with Carton	T.B.D.	T.B.D.	T.B.D.	T.B.D.	T.B.D.
Carton Size	T.B.D.	T.B.D.	T.B.D.	T.B.D.	T.B.D.

10. RoHS Compliance

MS5168-Mxx modules meet the requirements of Directive 2002/95/EC of the European Parliament and of the Council on the Restriction of Hazardous Substance (RoHS).

11. Disclaimers

The contents of this document are subject to change without notice. Meshreen reserves the right to make changes, without notice, in the products, including circuits and/or software, described or contained therein. Information contained in this document regarding device applications and the like is intended through suggestion only and may be superseded by updates. It is your responsibility to ensure that your application meets with your specifications. Meshreen warrants performance of its hardware products to the specifications applicable at the time of sale in accordance with Meshreen standard warranty. Testing and other quality control techniques are used to the extent MESHREEN deems necessary to support this warranty. Except where mandatory by government requirements, testing of all parameters of each product is not necessarily performed. MESHREEN assumes no responsibility or liability for the use of any of these products, conveys no license or title under any patent, copyright, or masks work right to these products, and makes no representations or warranties that these products are free from patent, copyright, or mask work infringement, unless otherwise specified. MESHREEN products are not intended for use in life support systems, appliances or systems where malfunction of these products can reasonably be expected to result in personal injury, death or severe property or environmental damage. MESHREEN customers using or selling these products for use in such applications do so at their own risk and agree to fully indemnify MESHREEN for any damages resulting from such use. All products are sold subject to MESHREEN's terms and conditions of sale supplied at the time of order acknowledgment.
All trademarks are the property of their respective owners.

12. Version Control

Version	Date	Notes
1.0	2013.11.05	1st Issue
1.8	2015.03.30	Add M06 specification
1.9	2015.05.12	Add Temperature conditions
2.0	2016.01.27	Modify FCC statement, Labeling example, Disclaimers, RoHS statement
3.0	2016.05.26	Add model MS5169-M03
3.1	2017.03.26	Modify Label Printing
3.2	2017.04.05	Remove MS5168-M06 outline drawing
3.3`	2019.3.12	Add packing weight information
3.4	2019.10.2	Add MS5168-M14 model information
3.5	2019.11.4	Modify Power Level base on FCC certification

Meshreen Ltd.,
Email: info@meshreen.com
http://meshreen.com