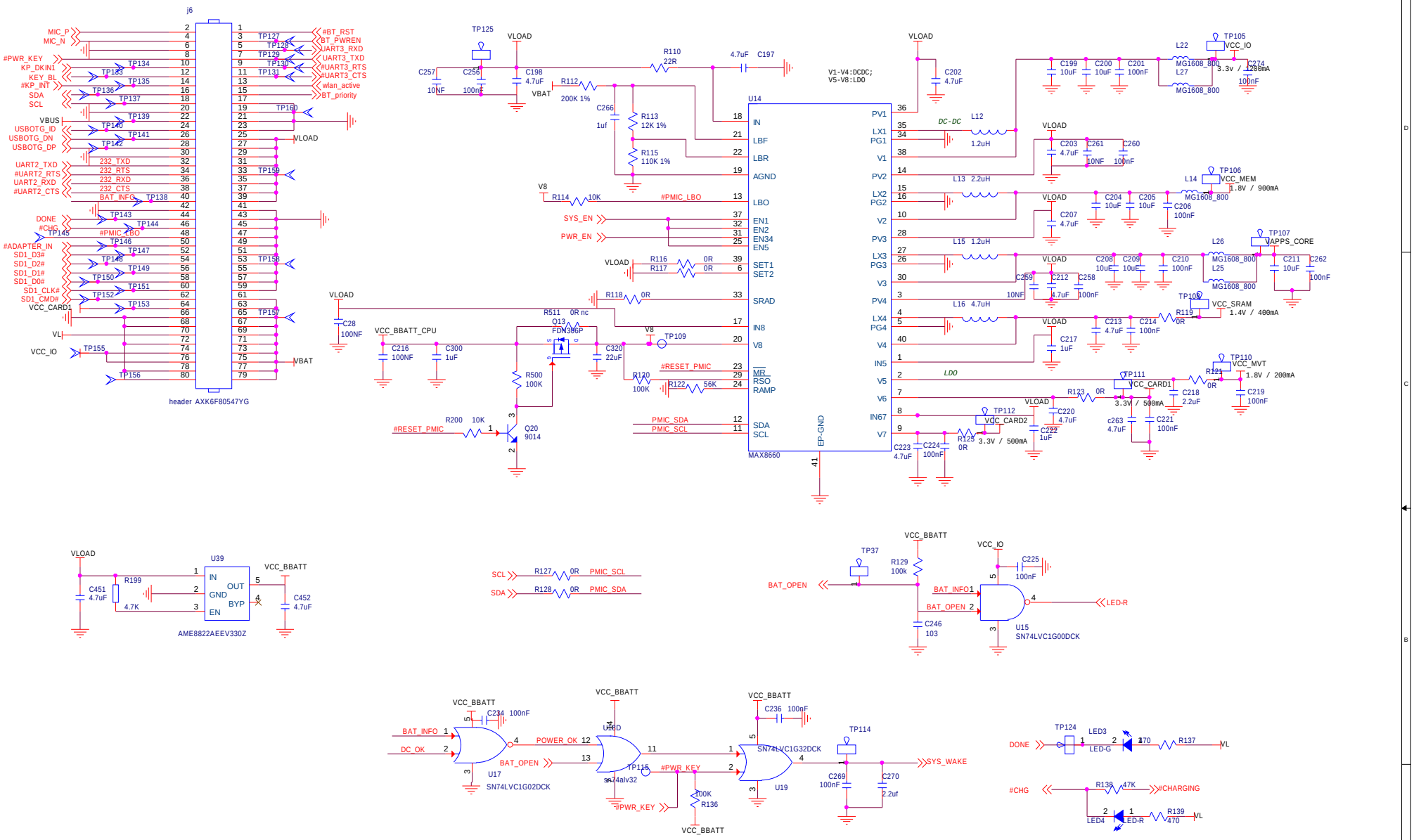
j6
header AXK6F80547YG
MIC_P
MIC_N
#PWR_KEY
KP_DKIN1
KEY_BL
#KP_INT
SDA
SCL
VBUS
USBOTG_ID
USBOTG_DN
USBOTG_DP
UART2_TXD
#UART2_RTS
UART2_RXD
#UART2_CTS
DONE
#CHG
#ADAPTER_IN
SD1_D3#
SD1_D2#
SD1_D1#
SD1_D0#
SD1_CLK#
SD1_CMD#
VCC_CARD1
VL
VCC_IO
#BT_RST
BT_PWREN
UART3_RXD
UART3_TXD
#UART3_RTS
#UART3_CTS
wlan_active
BT_priority
VLOAD
VBAT
U14
MAX8660
V1-V4:DCDC;
V5-V8:LDO
DC-DC
LDO
EP-GND
#PMIC_LBO
SYS_EN
PWR_EN
#RESET_PMIC
PMIC_SDA
PMIC_SCL
VCC_BBATT_CPU
FDM306P
Q20
9014
U39
AME8822AEEV330Z
VCC_BBATT
SCL
SDA
BAT_OPEN
BAT_INFO
LED-R
U15
SN74LVC1G00DCK
DC_OK
POWER_OK
U17
SN74LVC1G02DCK
U18D
SN74alv32
#PWR_KEY
U19
SN74LVC1G32DCK
SYS_WAKE
DONE
LED3
LED-G
VL
#CHG
#CHARGING
LED4
LED-R
VCC_IO
VCC_MEM
VAPPS_CORE
VCC_SRAM
VCC_MVT
VCC_CARD1
VCC_CARD2
3.3V / 500mA
1.8V / 900mA
1.4V / 400mA
1.8V / 200mA

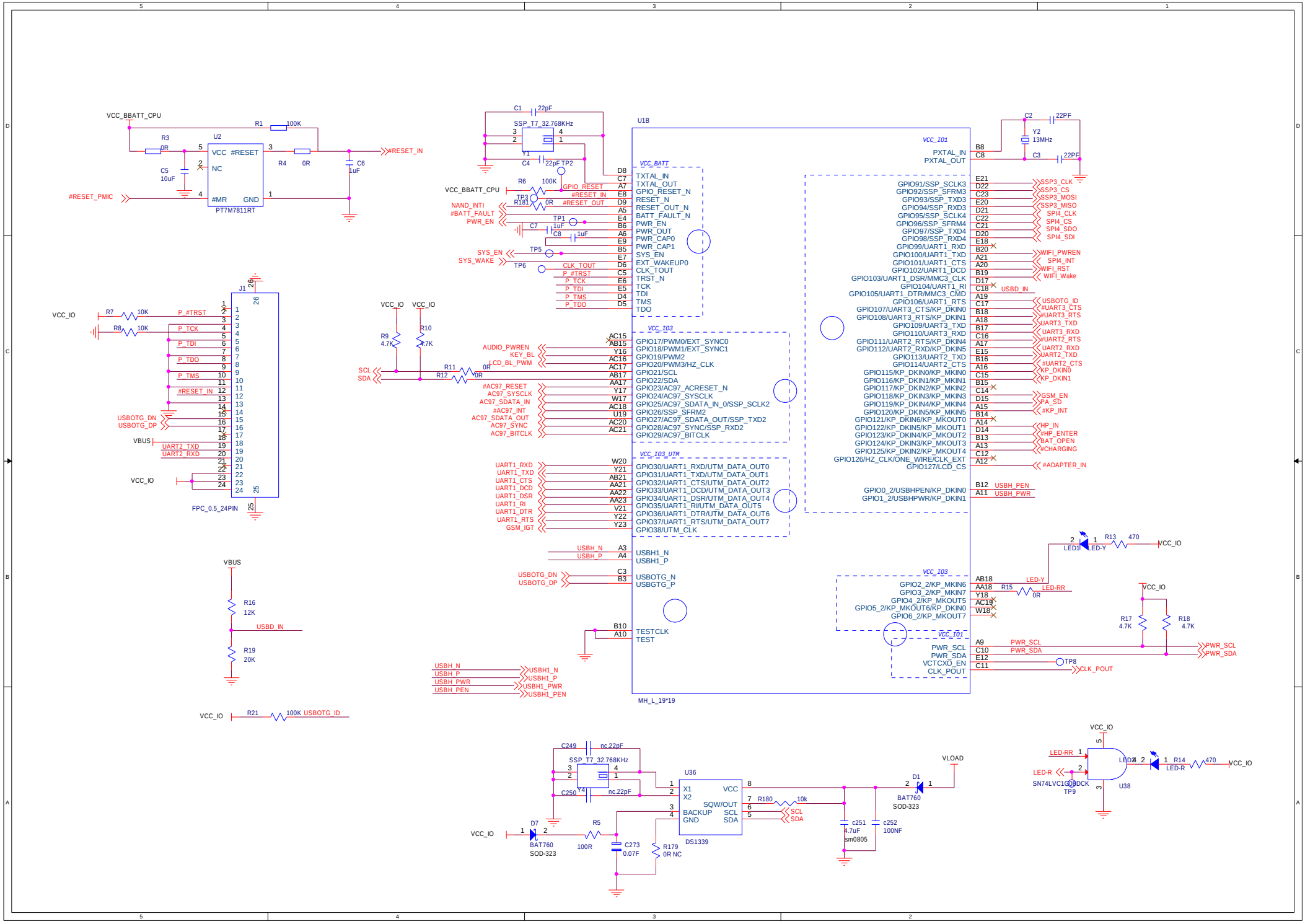
VCC_BBATT_CPU
R1 100K
R3 0R
U2
VCC #RESET
NC
#MR GND
PT7M7811RT
R4 0R
C6 1uF
#RESET_IN
C5 10uF
#RESET_PMIC
C1 22pF
SSP_T7_32.768KHz
Y1
C4 22pF TP2
U1B
VCC_BATT
TXTAL_IN
TXTAL_OUT
GPIO_RESET_N
RESET_N
RESET_OUT_N
BATT_FAULT_N
PWR_EN
PWR_OUT
PWR_CAP0
PWR_CAP1
SYS_EN
EXT_WAKEUP0
CLK_TOUT
TRST_N
TCK
TDI
TMS
TDO
R6 100K
GPIO_RESET
#RESET_IN
#RESET_OUT
NAND_INTI
#BATT_FAULT
PWR_EN
R181 0R
TP3
TP1
C7 1uF
C8 1uF
SYS_EN
SYS_WAKE
TP5
TP6
CLK_TOUT
P_#TRST
P_TCK
P_TDI
P_TMS
P_TDO
VCC_I01
PXTAL_IN
PXTAL_OUT
C2 22PF
Y2 13MHz
C3 22PF
GPIO91/SSP_SCLK3
GPIO92/SSP_SFRM3
GPIO93/SSP_TXD3
GPIO94/SSP_RXD3
GPIO95/SSP_SCLK4
GPIO96/SSP_SFRM4
GPIO97/SSP_TXD4
GPIO98/SSP_RXD4
GPIO99/UART1_RXD
GPIO100/UART1_TXD
GPIO101/UART1_CTS
GPIO102/UART1_DCD
GPIO103/UART1_DSR/MMC3_CLK
GPIO104/UART1_RI
GPIO105/UART1_DTR/MMC3_CMD
GPIO106/UART1_RTS
GPIO107/UART3_CTS/KP_DKIN0
GPIO108/UART3_RTS/KP_DKIN1
GPIO109/UART3_TXD
GPIO110/UART3_RXD
GPIO111/UART2_RTS/KP_DKIN4
GPIO112/UART2_RXD/KP_DKIN5
GPIO113/UART2_TXD
GPIO114/UART2_CTS
GPIO115/KP_DKIN0/KP_MKIN0
GPIO116/KP_DKIN1/KP_MKIN1
GPIO117/KP_DKIN2/KP_MKIN2
GPIO118/KP_DKIN3/KP_MKIN3
GPIO119/KP_DKIN4/KP_MKIN4
GPIO120/KP_DKIN5/KP_MKIN5
GPIO121/KP_DKIN6/KP_MKOUT0
GPIO122/KP_DKIN5/KP_MKOUT1
GPIO123/KP_DKIN4/KP_MKOUT2
GPIO124/KP_DKIN3/KP_MKOUT3
GPIO125/KP_DKIN2/KP_MKOUT4
GPIO126/HZ_CLK/ONE_WIRE/CLK_EXT
GPIO127/LCD_CS
SSP3_CLK
SSP3_CS
SSP3_MOSI
SSP3_MISO
SPI4_CLK
SPI4_CS
SPI4_SDO
SPI4_SDI
WIFI_PWREN
SPI4_INT
WIFI_RST
WIFI_Wake
USBD_IN
USBOTG_ID
#UART3_CTS
#UART3_RTS
UART3_TXD
UART3_RXD
#UART2_RTS
UART2_RXD
UART2_TXD
#UART2_CTS
KP_DKIN0
KP_DKIN1
GSM_EN
PA_SD
#KP_INT
HP_IN
#HP_ENTER
BAT_OPEN
#CHARGING
#ADAPTER_IN
USBH_PEN
USBH_PWR
J1
FPC_0.5_24PIN
VCC_IO
R7 10K
R8 10K
P_#TRST
P_TCK
P_TDI
P_TDO
P_TMS
#RESET_IN
USBOTG_DN
USBOTG_DP
VBUS
UART2_TXD
UART2_RXD
R9 4.7K
R10 4.7K
SCL
SDA
R11 0R
R12 0R
VCC_I03
AUDIO_PWREN
KEY_BL
CD_BL_PWM
#AC97_RESET
AC97_SYSCLK
AC97_SDATA_IN
#AC97_INT
AC97_SDATA_OUT
AC97_SYNC
AC97_BITCLK
GPIO17/PWM0/EXT_SYNC0
GPIO18/PWM1/EXT_SYNC1
GPIO19/PWM2
GPIO20/PWM3/HZ_CLK
GPIO21/SCL
GPIO22/SDA
GPIO23/AC97_ACRESET_N
GPIO24/AC97_SYSCLK
GPIO25/AC97_SDATA_IN_0/SSP_SCLK2
GPIO26/SSP_SFRM2
GPIO27/AC97_SDATA_OUT/SSP_TXD2
GPIO28/AC97_SYNC/SSP_RXD2
GPIO29/AC97_BITCLK
VCC_I03_UTM
UART1_RXD
UART1_TXD
UART1_CTS
UART1_DCD
UART1_DSR
UART1_RI
UART1_DTR
UART1_RTS
GSM_IGT
GPIO30/UART1_RXD/UTM_DATA_OUT0
GPIO31/UART1_TXD/UTM_DATA_OUT1
GPIO32/UART1_CTS/UTM_DATA_OUT2
GPIO33/UART1_DCD/UTM_DATA_OUT3
GPIO34/UART1_DSR/UTM_DATA_OUT4
GPIO35/UART1_RI/UTM_DATA_OUT5
GPIO36/UART1_DTR/UTM_DATA_OUT6
GPIO37/UART1_RTS/UTM_DATA_OUT7
GPIO38/UTM_CLK
USBH_N
USBH_P
USBH1_N
USBH1_P
USBOTG_N
USBGTG_P
TESTCLK
TEST
GPIO0_2/USBHPEN/KP_DKIN0
GPIO1_2/USBHPWR/KP_DKIN1
VCC_I03
GPIO2_2/KP_MKIN6
GPIO3_2/KP_MKIN7
GPIO4_2/KP_MKOUT5
GPIO5_2/KP_MKOUT6/KP_DKIN0
GPIO6_2/KP_MKOUT7
VCC_I01
PWR_SCL
PWR_SDA
VCTCXO_EN
CLK_POUT
LED1 LED-Y
R13 470
LED-Y
LED-RR
R15 0R
R17 4.7K
R18 4.7K
TP8
MH_L_19*19
R16 12K
USBD_IN
R19 20K
R21 100K USBOTG_ID
C249 nc.22pF
SSP_T7_32.768KHz
Y4
C250 nc.22pF
U36
X1
X2
VCC
SQW/OUT
BACKUP
GND
SCL
SDA
DS1339
R180 10k
VLOAD
D1
BAT760
SOD-323
c251 4.7uF
sm0805
c252 100NF
D7
BAT760
SOD-323
R5 100R
C273 0.07F
R179 0R NC
LED-RR
LED-R
SN74LVC1G08DCK
TP9
U38
LED2
R14 470

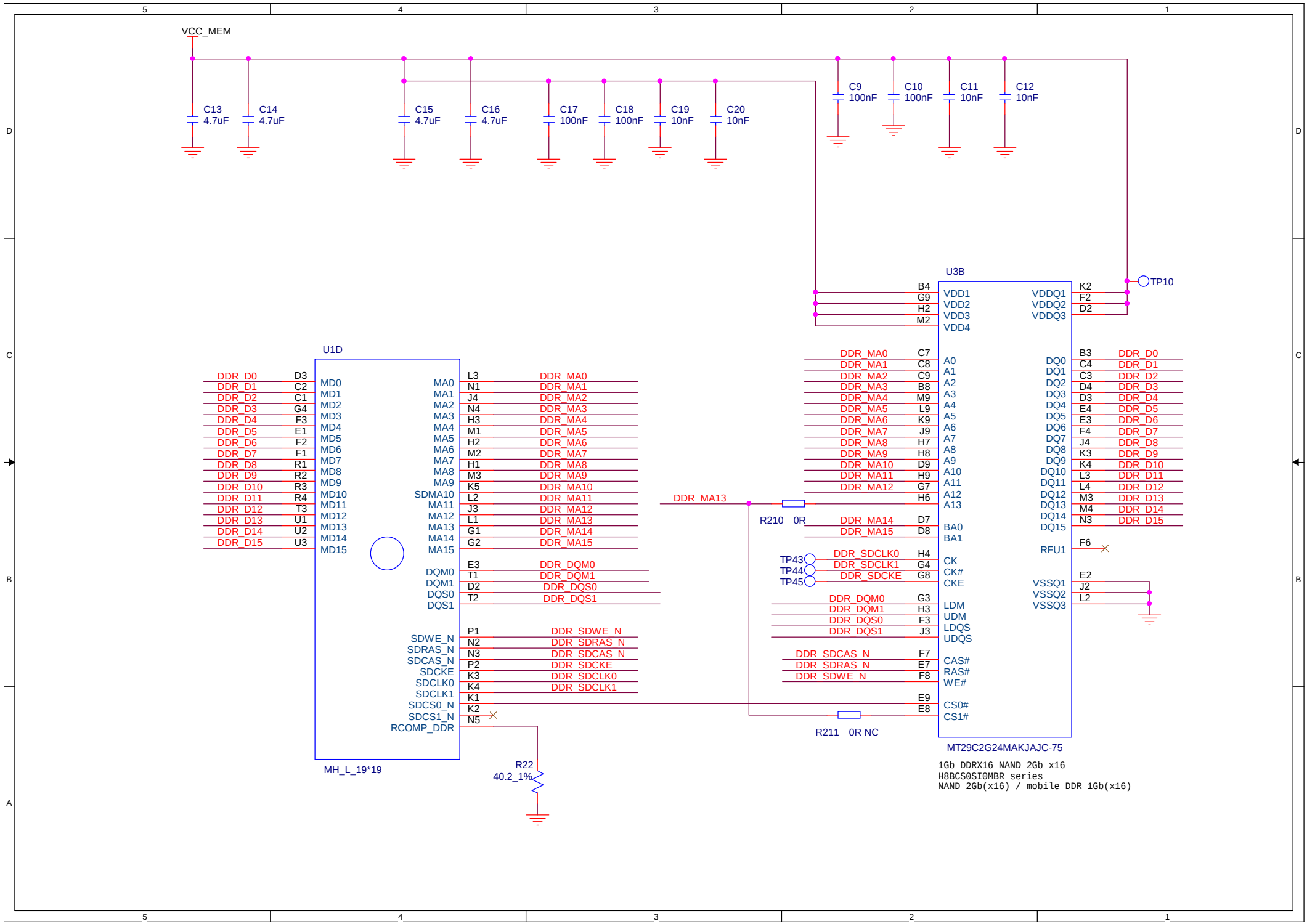
VCC_MEM
C13 4.7uF
C14 4.7uF
C15 4.7uF
C16 4.7uF
C17 100nF
C18 100nF
C19 10nF
C20 10nF
C9 100nF
C10 100nF
C11 10nF
C12 10nF
U3B
TP10
VDD1 B4
VDD2 G9
VDD3 H2
VDD4 M2
VDDQ1 K2
VDDQ2 F2
VDDQ3 D2
U1D
MD0 D3 DDR_D0
MD1 C2 DDR_D1
MD2 C1 DDR_D2
MD3 G4 DDR_D3
MD4 F3 DDR_D4
MD5 E1 DDR_D5
MD6 F2 DDR_D6
MD7 F1 DDR_D7
MD8 R1 DDR_D8
MD9 R2 DDR_D9
MD10 R3 DDR_D10
MD11 R4 DDR_D11
MD12 T3 DDR_D12
MD13 U1 DDR_D13
MD14 U2 DDR_D14
MD15 U3 DDR_D15
MA0 L3 DDR_MA0
MA1 N1 DDR_MA1
MA2 J4 DDR_MA2
MA3 N4 DDR_MA3
MA4 H3 DDR_MA4
MA5 M1 DDR_MA5
MA6 H2 DDR_MA6
MA7 M2 DDR_MA7
MA8 H1 DDR_MA8
MA9 M3 DDR_MA9
SDMA10 K5 DDR_MA10
MA11 L2 DDR_MA11
MA12 J3 DDR_MA12
MA13 L1 DDR_MA13
MA14 G1 DDR_MA14
MA15 G2 DDR_MA15
DQM0 E3 DDR_DQM0
DQM1 T1 DDR_DQM1
DQS0 D2 DDR_DQS0
DQS1 T2 DDR_DQS1
SDWE_N P1 DDR_SDWE_N
SDRAS_N N2 DDR_SDRAS_N
SDCAS_N N3 DDR_SDCAS_N
SDCKE P2 DDR_SDCKE
SDCLK0 K3 DDR_SDCLK0
SDCLK1 K4 DDR_SDCLK1
SDCS0_N K1
SDCS1_N K2
RCOMP_DDR N5
MH_L_19*19
R22 40.2_1%
DDR_MA13
R210 0R
R211 0R NC
TP43
TP44
TP45
A0 C7 DDR_MA0
A1 C8 DDR_MA1
A2 C9 DDR_MA2
A3 B8 DDR_MA3
A4 M9 DDR_MA4
A5 L9 DDR_MA5
A6 K9 DDR_MA6
A7 J9 DDR_MA7
A8 H7 DDR_MA8
A9 H8 DDR_MA9
A10 D9 DDR_MA10
A11 H9 DDR_MA11
A12 G7 DDR_MA12
A13 H6
BA0 D7 DDR_MA14
BA1 D8 DDR_MA15
CK H4 DDR_SDCLK0
CK# G4 DDR_SDCLK1
CKE G8 DDR_SDCKE
LDM G3 DDR_DQM0
UDM H3 DDR_DQM1
LDQS F3 DDR_DQS0
UDQS J3 DDR_DQS1
CAS# F7 DDR_SDCAS_N
RAS# E7 DDR_SDRAS_N
WE# F8 DDR_SDWE_N
CS0# E9
CS1# E8
DQ0 B3 DDR_D0
DQ1 C4 DDR_D1
DQ2 C3 DDR_D2
DQ3 D4 DDR_D3
DQ4 D3 DDR_D4
DQ5 E4 DDR_D5
DQ6 E3 DDR_D6
DQ7 F4 DDR_D7
DQ8 J4 DDR_D8
DQ9 K3 DDR_D9
DQ10 K4 DDR_D10
DQ11 L3 DDR_D11
DQ12 L4 DDR_D12
DQ13 M3 DDR_D13
DQ14 M4 DDR_D14
DQ15 N3 DDR_D15
RFU1 F6
VSSQ1 E2
VSSQ2 J2
VSSQ3 L2
MT29C2G24MAKJAJC-75
1Gb DDRX16 NAND 2Gb x16
H8BCS0SI0MBR series
NAND 2Gb(x16) / mobile DDR 1Gb(x16)

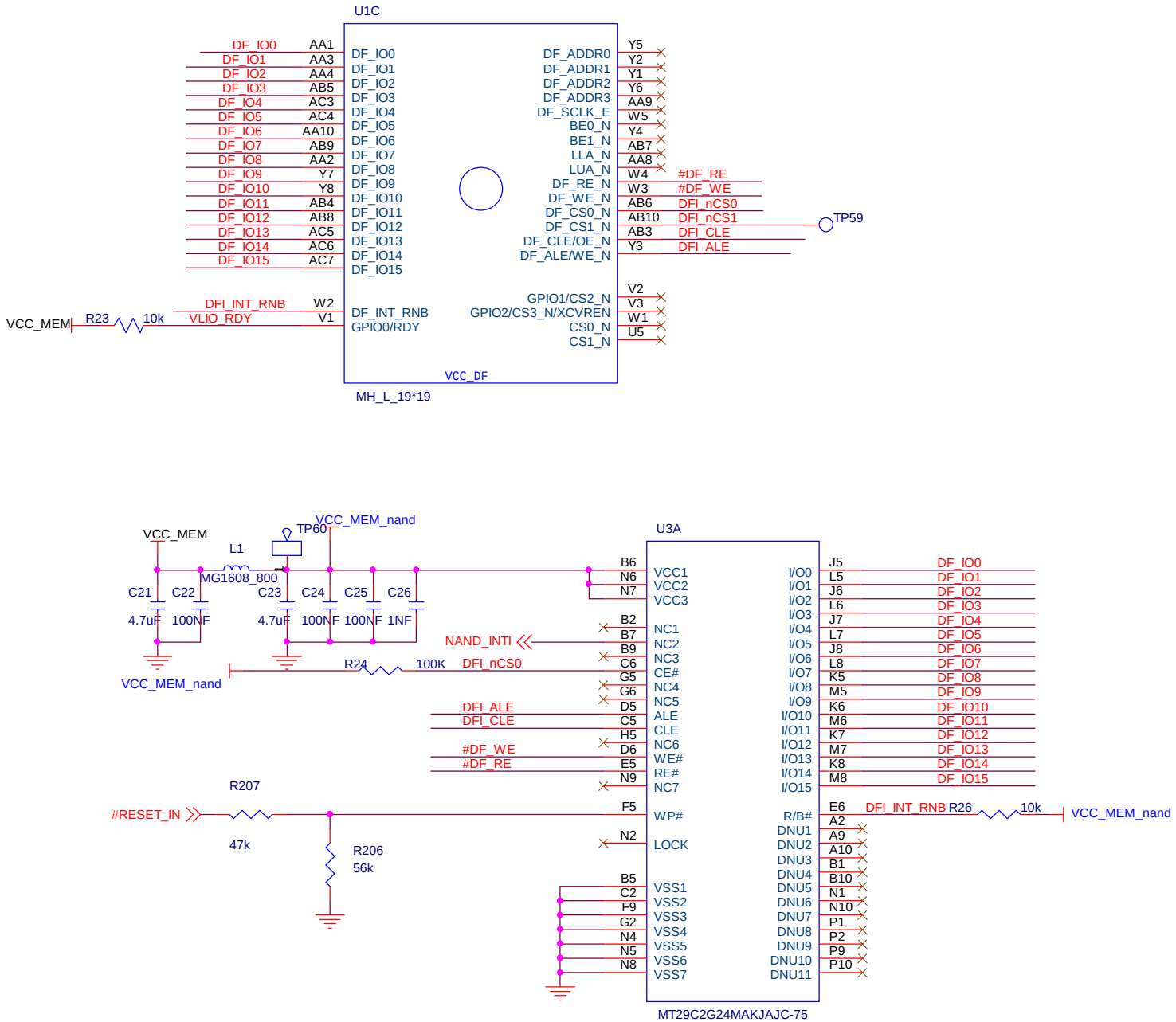
U1C
DF_IO0 AA1
DF_IO1 AA3
DF_IO2 AA4
DF_IO3 AB5
DF_IO4 AC3
DF_IO5 AC4
DF_IO6 AA10
DF_IO7 AB9
DF_IO8 AA2
DF_IO9 Y7
DF_IO10 Y8
DF_IO11 AB4
DF_IO12 AB8
DF_IO13 AC5
DF_IO14 AC6
DF_IO15 AC7
DFI_INT_RNB W2
VLIO_RDY V1
DF_ADDR0 Y5
DF_ADDR1 Y2
DF_ADDR2 Y1
DF_ADDR3 Y6
DF_SCLK_E AA9
BE0_N W5
BE1_N Y4
LLA_N AB7
LUA_N AA8
DF_RE_N W4 #DF_RE
DF_WE_N W3 #DF_WE
DF_CS0_N AB6 DFI_nCS0
DF_CS1_N AB10 DFI_nCS1
DF_CLE/OE_N AB3 DFI_CLE
DF_ALE/WE_N Y3 DFI_ALE
GPIO1/CS2_N V2
GPIO2/CS3_N/XCVREN V3
CS0_N W1
CS1_N U5
TP59
VCC_MEM
R23 10k
VCC_DF
MH_L_19*19
VCC_MEM
VCC_MEM_nand
TP60
L1
MG1608_800
C21 4.7uF
C22 100NF
C23 4.7uF
C24 100NF
C25 100NF
C26 1NF
VCC_MEM_nand
U3A
B6 VCC1
N6 VCC2
N7 VCC3
B2 NC1
B7 NC2
B9 NC3
C6 CE#
G5 NC4
G6 NC5
D5 ALE
C5 CLE
H5 NC6
D6 WE#
E5 RE#
N9 NC7
F5 WP#
N2 LOCK
B5 VSS1
C2 VSS2
F9 VSS3
G2 VSS4
N4 VSS5
N5 VSS6
N8 VSS7
J5 I/O0 DF_IO0
L5 I/O1 DF_IO1
J6 I/O2 DF_IO2
L6 I/O3 DF_IO3
J7 I/O4 DF_IO4
L7 I/O5 DF_IO5
J8 I/O6 DF_IO6
L8 I/O7 DF_IO7
K5 I/O8 DF_IO8
M5 I/O9 DF_IO9
K6 I/O10 DF_IO10
M6 I/O11 DF_IO11
K7 I/O12 DF_IO12
M7 I/O13 DF_IO13
K8 I/O14 DF_IO14
M8 I/O15 DF_IO15
E6 R/B# DFI_INT_RNB
A2 DNU1
A9 DNU2
A10 DNU3
B1 DNU4
B10 DNU5
N1 DNU6
N10 DNU7
P1 DNU8
P2 DNU9
P9 DNU10
P10 DNU11
NAND_INTI
R24 100K DFI_nCS0
DFI_ALE
DFI_CLE
#DF_WE
#DF_RE
R207
#RESET_IN
47k
R206
56k
R26 10k
VCC_MEM_nand
MT29C2G24MAKJAJC-75

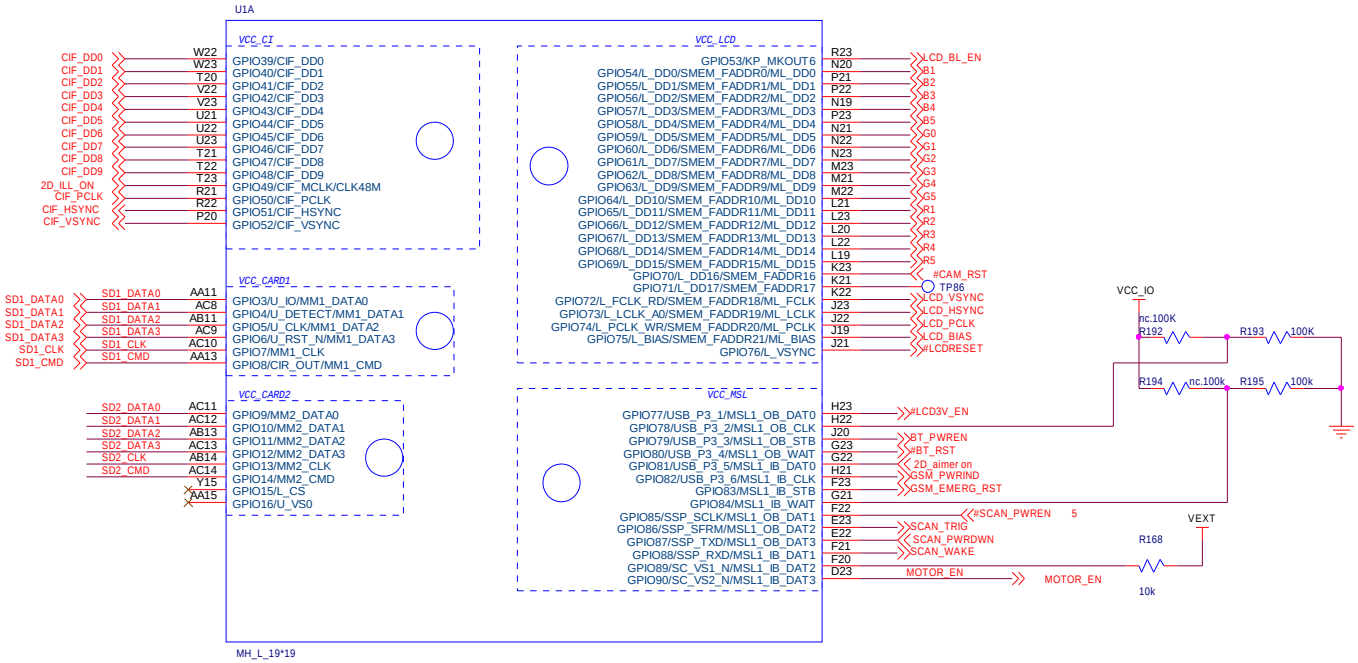
U1A
VCC_CI
GPIO39/CIF_DD0
GPIO40/CIF_DD1
GPIO41/CIF_DD2
GPIO42/CIF_DD3
GPIO43/CIF_DD4
GPIO44/CIF_DD5
GPIO45/CIF_DD6
GPIO46/CIF_DD7
GPIO47/CIF_DD8
GPIO48/CIF_DD9
GPIO49/CIF_MCLK/CLK48M
GPIO50/CIF_PCLK
GPIO51/CIF_HSYNC
GPIO52/CIF_VSYNC
VCC_LCD
GPIO53/KP_MKOUT6
GPIO54/L_DD0/SMEM_FADDR0/ML_DD0
GPIO55/L_DD1/SMEM_FADDR1/ML_DD1
GPIO56/L_DD2/SMEM_FADDR2/ML_DD2
GPIO57/L_DD3/SMEM_FADDR3/ML_DD3
GPIO58/L_DD4/SMEM_FADDR4/ML_DD4
GPIO59/L_DD5/SMEM_FADDR5/ML_DD5
GPIO60/L_DD6/SMEM_FADDR6/ML_DD6
GPIO61/L_DD7/SMEM_FADDR7/ML_DD7
GPIO62/L_DD8/SMEM_FADDR8/ML_DD8
GPIO63/L_DD9/SMEM_FADDR9/ML_DD9
GPIO64/L_DD10/SMEM_FADDR10/ML_DD10
GPIO65/L_DD11/SMEM_FADDR11/ML_DD11
GPIO66/L_DD12/SMEM_FADDR12/ML_DD12
GPIO67/L_DD13/SMEM_FADDR13/ML_DD13
GPIO68/L_DD14/SMEM_FADDR14/ML_DD14
GPIO69/L_DD15/SMEM_FADDR15/ML_DD15
GPIO70/L_DD16/SMEM_FADDR16
GPIO71/L_DD17/SMEM_FADDR17
GPIO72/L_FCLK_RD/SMEM_FADDR18/ML_FCLK
GPIO73/L_LCLK_A0/SMEM_FADDR19/ML_LCLK
GPIO74/L_PCLK_WR/SMEM_FADDR20/ML_PCLK
GPIO75/L_BIAS/SMEM_FADDR21/ML_BIAS
GPIO76/L_VSYNC
VCC_CARD1
GPIO3/U_IO/MM1_DATA0
GPIO4/U_DETECT/MM1_DATA1
GPIO5/U_CLK/MM1_DATA2
GPIO6/U_RST_N/MM1_DATA3
GPIO7/MM1_CLK
GPIO8/CIR_OUT/MM1_CMD
VCC_CARD2
GPIO9/MM2_DATA0
GPIO10/MM2_DATA1
GPIO11/MM2_DATA2
GPIO12/MM2_DATA3
GPIO13/MM2_CLK
GPIO14/MM2_CMD
GPIO15/L_CS
GPIO16/U_VS0
VCC_MSL
GPIO77/USB_P3_1/MSL1_OB_DAT0
GPIO78/USB_P3_2/MSL1_OB_CLK
GPIO79/USB_P3_3/MSL1_OB_STB
GPIO80/USB_P3_4/MSL1_OB_WAIT
GPIO81/USB_P3_5/MSL1_IB_DAT0
GPIO82/USB_P3_6/MSL1_IB_CLK
GPIO83/MSL1_IB_STB
GPIO84/MSL1_IB_WAIT
GPIO85/SSP_SCLK/MSL1_OB_DAT1
GPIO86/SSP_SFRM/MSL1_OB_DAT2
GPIO87/SSP_TXD/MSL1_OB_DAT3
GPIO88/SSP_RXD/MSL1_IB_DAT1
GPIO89/SC_VS1_N/MSL1_IB_DAT2
GPIO90/SC_VS2_N/MSL1_IB_DAT3
CIF_DD0
CIF_DD1
CIF_DD2
CIF_DD3
CIF_DD4
CIF_DD5
CIF_DD6
CIF_DD7
CIF_DD8
CIF_DD9
2D_ILL_ON
CIF_PCLK
CIF_HSYNC
CIF_VSYNC
SD1_DATA0
SD1_DATA1
SD1_DATA2
SD1_DATA3
SD1_CLK
SD1_CMD
SD2_DATA0
SD2_DATA1
SD2_DATA2
SD2_DATA3
SD2_CLK
SD2_CMD
LCD_BL_EN
B1
B2
B3
B4
B5
G0
G1
G2
G3
G4
G5
R1
R2
R3
R4
R5
#CAM_RST
TP86
LCD_VSYNC
LCD_HSYNC
LCD_PCLK
LCD_BIAS
#LCDRESET
#LCD3V_EN
BT_PWREN
#BT_RST
2D_aimer on
GSM_PWRIND
GSM_EMERG_RST
#SCAN_PWREN
SCAN_TRIG
SCAN_PWRDWN
SCAN_WAKE
MOTOR_EN
MH_L_19*19
VCC_IO
nc.100K
R192
R193
100K
R194
nc.100k
R195
100k
VEXT
R168
10k

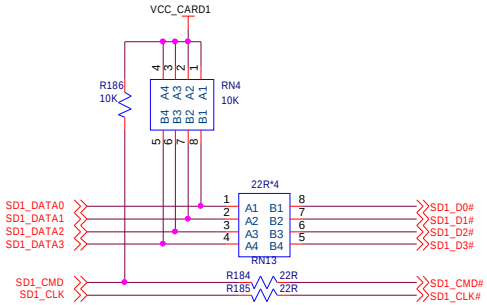
VCC_CARD1
R186
10K
RN4
10K
22R*4
RN13
SD1_DATA0
SD1_DATA1
SD1_DATA2
SD1_DATA3
SD1_D0#
SD1_D1#
SD1_D2#
SD1_D3#
SD1_CMD
SD1_CLK
R184
R185
22R
SD1_CMD#
SD1_CLK#

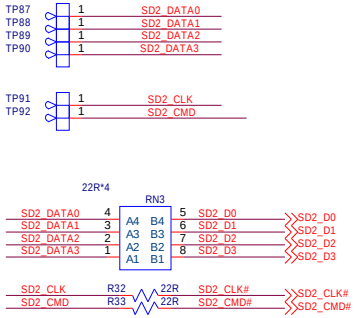
TP87
TP88
TP89
TP90
SD2_DATA0
SD2_DATA1
SD2_DATA2
SD2_DATA3
TP91
TP92
SD2_CLK
SD2_CMD
22R*4
RN3
SD2_D0
SD2_D1
SD2_D2
SD2_D3
R32
R33
22R
SD2_CLK#
SD2_CMD#

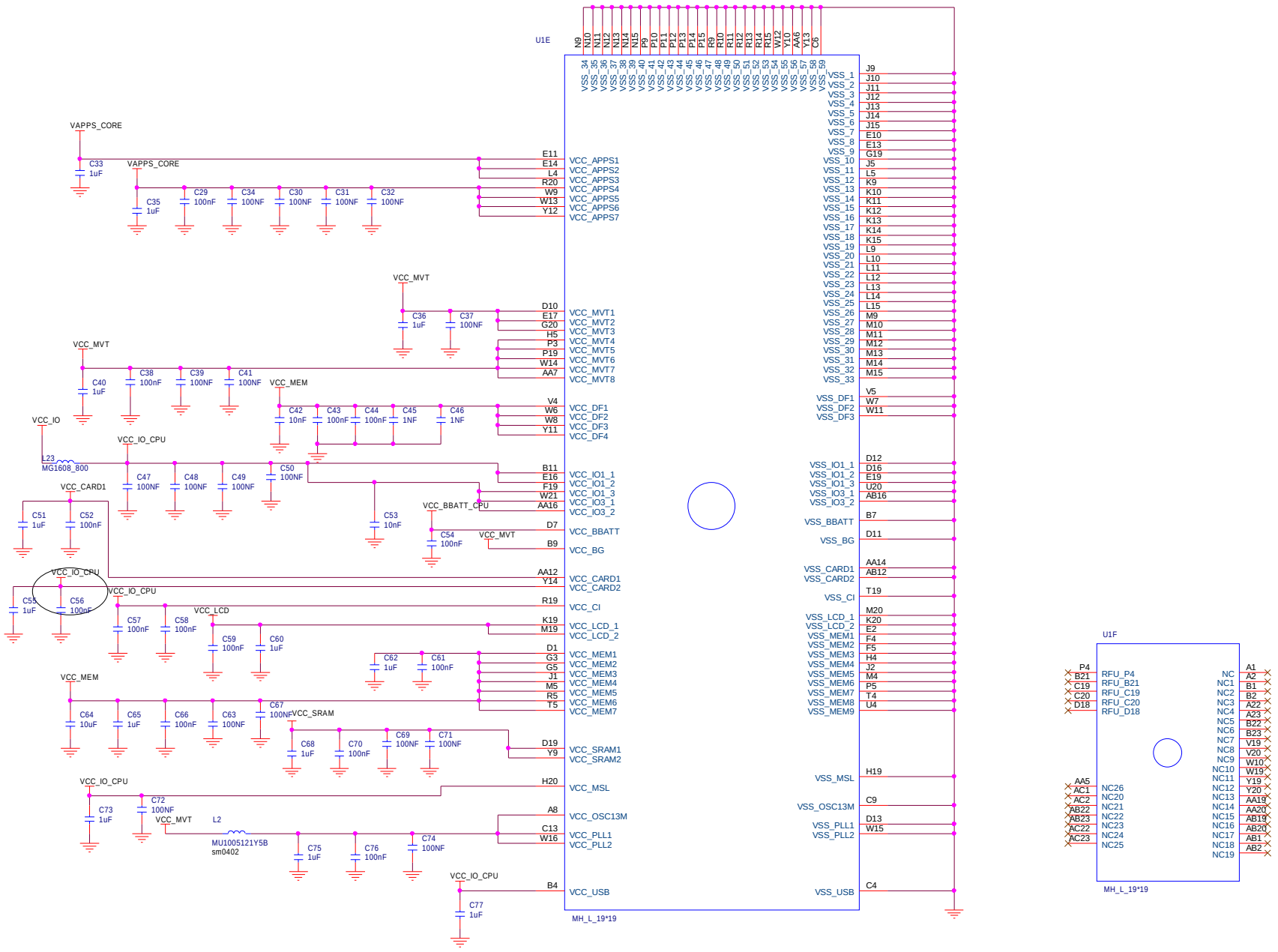
U1E
MH_L_19*19
VAPPS_CORE
VCC_MVT
VCC_MEM
VCC_IO
VCC_IO_CPU
VCC_CARD1
VCC_BBATT_CPU
VCC_LCD
VCC_SRAM
L23
MG1608_800
L2
MU1005121Y5B
sm0402
U1F
MH_L_19*19

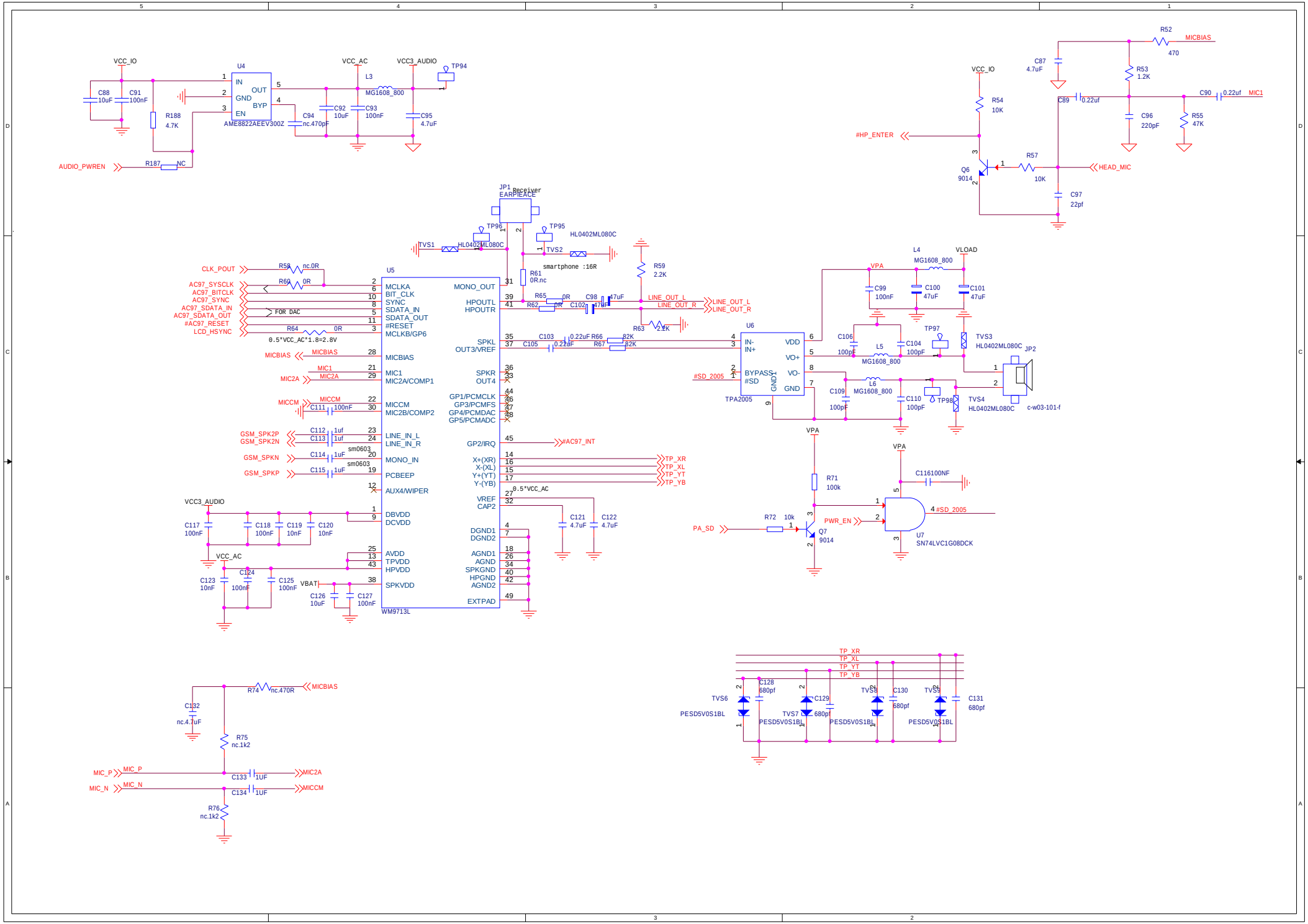
VCC_IO
U4
IN
OUT
GND
BYP
EN
AME8822AEEV300Z
C88 10uF
C91 100nF
R188 4.7K
R187 NC
AUDIO_PWREN
VCC_AC
L3 MG1608_800
C92 10uF
C93 100nF
C94 nc.470pF
VCC3_AUDIO
TP94
C95 4.7uF
R52 470
MICBIAS
C87 4.7uF
R53 1.2K
C89 0.22uf
C90 0.22uf
MIC1
C96 220pF
R55 47K
R54 10K
#HP_ENTER
Q6 9014
R57 10K
HEAD_MIC
C97 22pf
JP1 EARPIECE Receiver
TP96
TP95
HL0402ML080C
TVS1
TVS2
smartphone :16R
R61 0R.nc
R59 2.2K
R63 2.2K
CLK_POUT
R59 nc.0R
AC97_SYSCLK
AC97_BITCLK
AC97_SYNC
AC97_SDATA_IN
AC97_SDATA_OUT
#AC97_RESET
LCD_HSYNC
R60 0R
FOR DAC
R64 0R
0.5*VCC_AC*1.8=2.8V
U5
MCLKA
BIT_CLK
SYNC
SDATA_IN
SDATA_OUT
#RESET
MCLKB/GP6
MICBIAS
MIC1
MIC2A/COMP1
MICCM
MIC2B/COMP2
LINE_IN_L
LINE_IN_R
MONO_IN
PCBEEP
AUX4/WIPER
DBVDD
DCVDD
AVDD
TPVDD
HPVDD
SPKVDD
MONO_OUT
HPOUTL
HPOUTR
SPKL
OUT3/VREF
SPKR
OUT4
GP1/PCMCLK
GP3/PCMFS
GP4/PCMDAC
GP5/PCMADC
GP2/IRQ
X+(XR)
X-(XL)
Y+(YT)
Y-(YB)
VREF
CAP2
DGND1
DGND2
AGND1
AGND
SPKGND
HPGND
AGND2
EXTPAD
WM9713L
R65 0R
R62 0R
C98 47uF
C102 47uF
LINE_OUT_L
LINE_OUT_R
C103 0.22uF
C105 0.22uF
R66 82K
R67 82K
MICBIAS
MIC1
MIC2A
MICCM
C111 100nF
GSM_SPK2P
GSM_SPK2N
C112 1uf
C113 1uf
sm0603
GSM_SPKN
C114 1uF
GSM_SPKP
C115 1uF
#AC97_INT
TP_XR
TP_XL
TP_YT
TP_YB
0.5*VCC_AC
C121 4.7uF
C122 4.7uF
VCC3_AUDIO
C117 100nF
C118 100nF
C119 10nF
C120 10nF
VCC_AC
C123 10nF
C124 100nF
C125 100nF
VBAT
C126 10uF
C127 100nF
U6
IN-
IN+
BYPASS
#SD
VDD
VO+
VO-
GND
TPA2005
#SD_2005
L4 MG1608_800
VLOAD
VPA
C99 100nF
C100 47uF
C101 47uF
C106 100pF
L5 MG1608_800
C104 100pF
TP97
TVS3 HL0402ML080C
JP2
C109 100pF
L6 MG1608_800
C110 100pF
TP98
TVS4 HL0402ML080C
c-w03-101-f
R71 100k
PA_SD
R72 10k
Q7 9014
PWR_EN
C116100NF
#SD_2005
U7 SN74LVC1G08DCK
R74 nc.470R
MICBIAS
C132 nc.4.7uF
R75 nc.1k2
MIC_P
MIC_N
C133 1UF
C134 1UF
MIC2A
MICCM
R76 nc.1k2
TP_XR
TP_XL
TP_YT
TP_YB
TVS6
PESD5V0S1BL
C128 680pf
TVS7
C129 680pf
TVS8
C130 680pf
TVS9
C131 680pf

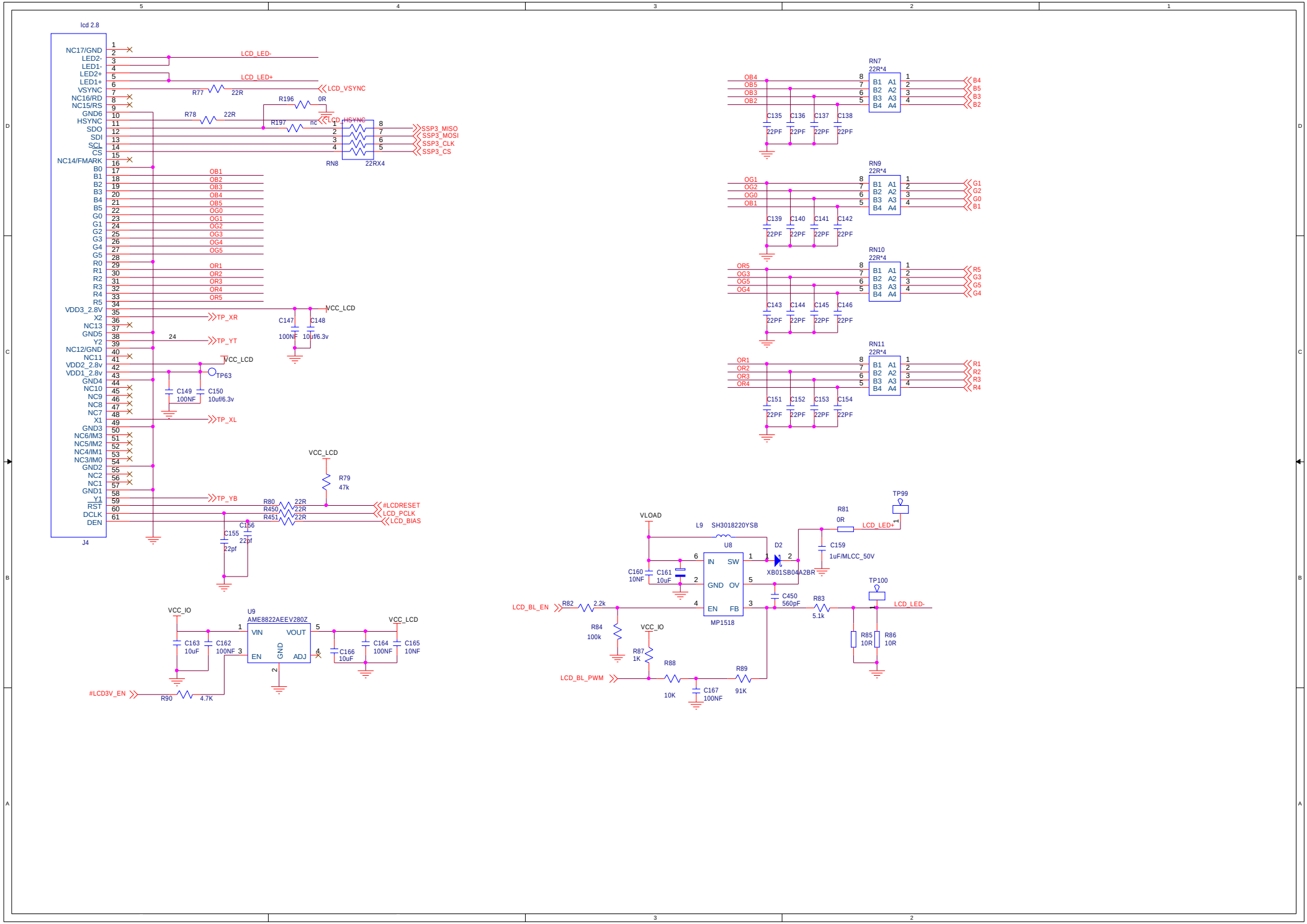
lcd 2.8
NC17/GND
LED2-
LED1-
LED2+
LED1+
VSYNC
NC16/RD
NC15/RS
GND6
HSYNC
SDO
SDI
SCL
CS
NC14/FMARK
B0
B1
B2
B3
B4
B5
G0
G1
G2
G3
G4
G5
R0
R1
R2
R3
R4
R5
VDD3_2.8V
X2
NC13
GND5
Y2
NC12/GND
NC11
VDD2_2.8v
VDD1_2.8v
GND4
NC10
NC9
NC8
NC7
X1
GND3
NC6/IM3
NC5/IM2
NC4/IM1
NC3/IM0
GND2
NC2
NC1
GND1
Y1
RST
DCLK
DEN
J4
LCD_LED-
LCD_LED+
LCD_VSYNC
R77 22R
R78 22R
R196 0R
R197 nc
LCD_HSYNC
SSP3_MISO
SSP3_MOSI
SSP3_CLK
SSP3_CS
RN8 22RX4
OB1
OB2
OB3
OB4
OB5
OG0
OG1
OG2
OG3
OG4
OG5
OR1
OR2
OR3
OR4
OR5
VCC_LCD
TP_XR
TP_YT
TP_XL
TP_YB
C147 100NF
C148 10uf/6.3v
C149 100NF
C150 10uf/6.3v
TP63
R79 47k
R80 22R
R450 22R
R451 22R
#LCDRESET
LCD_PCLK
LCD_BIAS
C155 22pf
C156 22pf
VCC_IO
U9
AME8822AEEV280Z
VIN
VOUT
EN
GND
ADJ
C163 10uF
C162 100NF
C166 10uF
C164 100NF
C165 10NF
#LCD3V_EN
R90 4.7K
RN7 22R*4
RN9 22R*4
RN10 22R*4
RN11 22R*4
B1 A1
B2 A2
B3 A3
B4 A4
C135 22PF
C136 22PF
C137 22PF
C138 22PF
C139 22PF
C140 22PF
C141 22PF
C142 22PF
C143 22PF
C144 22PF
C145 22PF
C146 22PF
C151 22PF
C152 22PF
C153 22PF
C154 22PF
B4
B5
B3
B2
G1
G2
G0
B1
R5
G3
G5
G4
R1
R2
R3
R4
VLOAD
L9 SH3018220YSB
U8
IN
SW
GND
OV
EN
FB
MP1518
C160 10NF
C161 10uF
D2
XB01SB04A2BR
C450 560pF
R81 0R
TP99
LCD_LED+
C159 1uF/MLCC_50V
TP100
LCD_LED-
R83 5.1k
R85 10R
R86 10R
LCD_BL_EN
R82 2.2k
R84 100k
VCC_IO
R87 1K
R88 10K
C167 100NF
R89 91K
LCD_BL_PWM

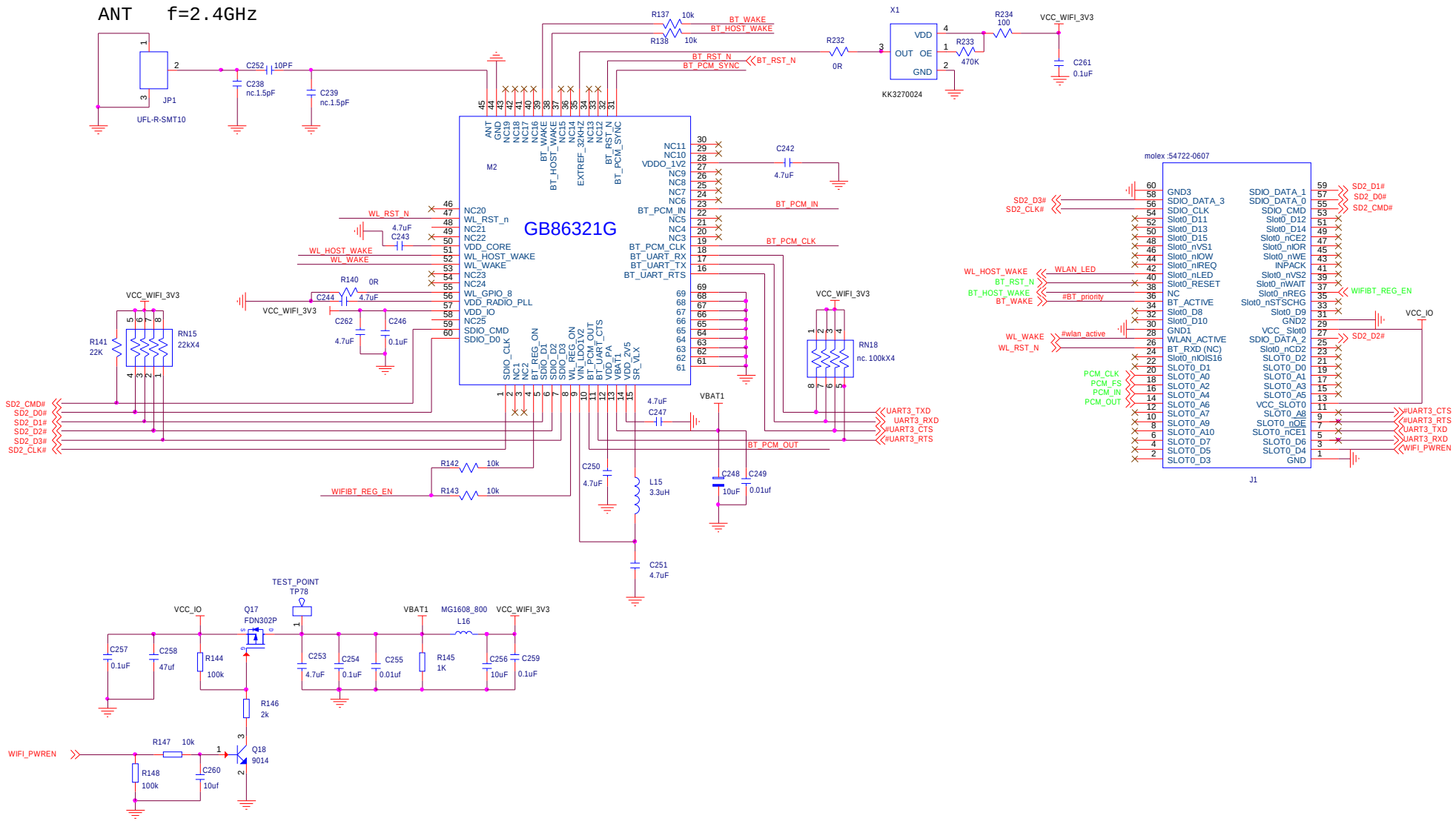
ANT f=2.4GHz
JP1
UFL-R-SMT10
C252 10PF
C238 nc.1.5pF
C239 nc.1.5pF
R137 10k
R138 10k
BT_WAKE
BT_HOST_WAKE
BT_RST_N
BT_PCM_SYNC
R232 0R
X1
VDD
OUT OE
GND
KK3270024
R233 470K
R234 100
VCC_WIFI_3V3
C261 0.1uF
M2
GB86321G
C242 4.7uF
BT_PCM_IN
BT_PCM_CLK
WL_RST_N
WL_HOST_WAKE
WL_WAKE
C243 4.7uF
R140 0R
C244 4.7uF
C262 4.7uF
C246 0.1uF
VCC_WIFI_3V3
RN15 22kX4
R141 22K
SD2_CMD#
SD2_D0#
SD2_D1#
SD2_D2#
SD2_D3#
SD2_CLK#
RN18 nc.100kX4
UART3_TXD
UART3_RXD
#UART3_CTS
#UART3_RTS
BT_PCM_OUT
C247 4.7uF
VBAT1
R142 10k
R143 10k
WIFIBT_REG_EN
C250 4.7uF
L15 3.3uH
C248 10uF
C249 0.01uf
C251 4.7uF
molex :54722-0607
J1
VCC_IO
WLAN_LED
#BT_priority
#wlan_active
PCM_CLK
PCM_FS
PCM_IN
PCM_OUT
TEST_POINT TP78
Q17 FDN302P
MG1608_800 L16
C257 0.1uF
C258 47uf
R144 100k
C253 4.7uF
C254 0.1uF
C255 0.01uf
R145 1K
C256 10uF
C259 0.1uF
R146 2k
R147 10k
R148 100k
C260 10uf
Q18 9014
WIFI_PWREN