5. Calibration of Gimbal

Please do calibration when the S1 is not working as horizontal by unbalanced of roll and tilt while using the S1.

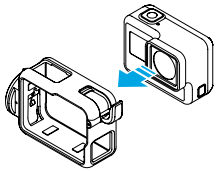

1. Place the GoPro camera into frame housing and attach frame housing to the gimbal.

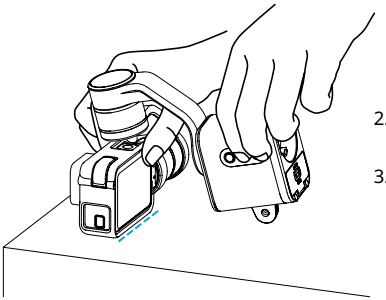

2. Put the frame housing on a flat surface. (Refer to the image)

3. - Like the left image, hold the gimbal and the frame housing tightly with hands.
   - Power on the gimbal.
   - Press the (M) button and (🔗) button together for 3 seconds. (Please do calibration in a flat or horizontal surfaces.)

4. After indicating "User Calibration" on OLED display, calibarion operates for 5 second. (While operating calibration, DO NOT move the gimbal and the frame housing.)

Video Tutorials

Step 1

Step 2

6. How to use Low Angle

When using Pan Mode:

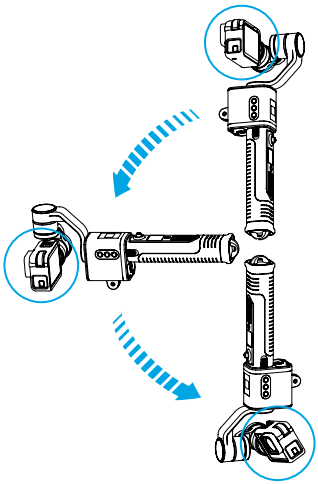

In Pan Mode, the camera will automatically position left and right. The Tilt and Roll positions are fixed, therefore the camera will be pointing at the gimbal's motor.

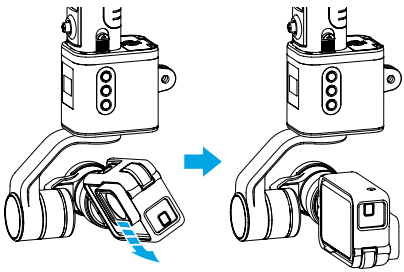

Using your hand, manually adjust the camera's position by rotating the camera away from the gimbal motor.

When using Follow Mode:

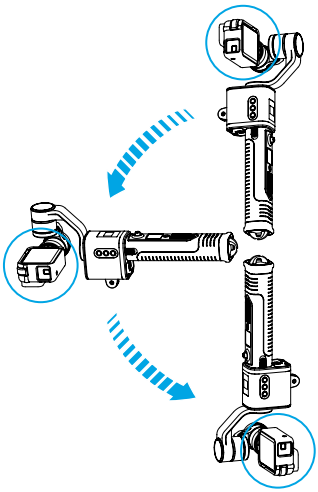

In follow mode, the camera will automatically adjust its position as it is inverted.

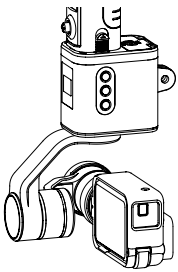

The gimbal is automatically position and ready for use.

7. Firmware Upgrade

Please visit our website at **www.removu.com/s1_firmware**. The detailed upgrade instructions can also be found on the page.

Note: The USB port of this device is using as debugging port. so, consumers can not be used that USB as transmitting of data.

8. Technical Specs

Gimbal

Operating Voltage (DC)	6.4V ~ 8.4V
Weight	380g (housing and battery excluded)
Vertical Tilt Angle	292°
Roll Angle	90°
Horizontal Panning Angle	292°
Operating Time (@25°C)	3h ~ 5h
Battery	7.4V / 850mAh
Battery Charging Time	2.5h (5V/2A)
Operating Temperature	-20°C ~ 45°C

Handle

Dimensions	1.29 x 1.26 x 6.31 inches (32.8 x 32.0 x 160.4 mm)
Weight	70g

Remote Control

Operating Time (@25°C)	10h
Operating Distance	33feets (10m)
Weight	24g
Battery	3.7V / 200mAh
Battery Charging Time	2.5h (5V/2A)
Operating Temperature	-20°C ~ 45°C

9. Safety Instructions

Maintenance

Follow these guidelines to get the best performance from your REMOVU S1.

- REMOVU S1 is a rainproof gimbal that can be used in the rain or snow. Do not submerge S1 in the water for underwater shoot purpose. Make sure that S1's battery cover is closed before using.
- Before closing the doors, be sure the seals are free of debris. If needed, clean with a cloth.
- Before opening the doors, be sure S1 gimbal is free of water or debris. If needed, rinse the device with fresh water and dry it with a cloth.
- If sand or debris hardens around the doors, rinse with tap water thoroughly to remove the debris before opening the doors.
- After every use in salt water, rinse the S1 gimbal with fresh water and dry it with a clean cloth.
- In wet environments, dry the S1 gimbal with a soft cloth and dry it, so that it will be protected from corrosion.
- To clean the S1 gimbal, wipe it with a soft, lint-free cloth. If debris becomes lodged between the each motor and the trim ring, flush it out with water or air. Do not insert foreign objects around the motor joints.

Battery Information

Follow these guidelines to get the safe performance from your REMOVU S1.

- The batteries of S1 and the remote controller should be charged by an S1 exclusive charger only. 5V/2A adaptor is recommended. Charge only 1 battery, if charged under 5V/1A.
- S1 contains sensitive components, including the battery. Avoid exposing your S1 to very cold or very hot temperatures. Low or high temperature conditions may temporarily shorten the battery life or cause the S1 to temporarily stop working properly.
- Avoid dramatic changes in temperature or humidity when using the S1, as condensation may form on or within S1.
- Do not dry the S1 or battery with an external heat source such as a microwave oven or hair dryer. Damage to the S1 or battery caused by contact with liquid inside the S1 is not covered under the warranty.
- Do not store your battery with metal objects, such as coins, keys or necklaces. If the battery terminals come in contact with metal objects, this may cause a fire.

Warning: Do not drop, disassemble, open, crush, bend, deform, puncture, shred, microwave, incinerate or paint the S1 or battery. Do not insert foreign objects into the battery opening on the S1. Do not use the S1 or the battery, if it has been damaged—for example, if cracked, punctured or harmed by water. Disassembling or puncturing the battery can cause an explosion or fire.

Battery Disposal

Most rechargeable Li-Polymer batteries are classified as non-hazardous waste and are safe for disposal in the normal municipal waste stream. Many localities have laws in place requiring battery recycling. Check your local laws to make sure that you can dispose of rechargeable batteries in your regular trash. To safely dispose of Li-Polymer batteries, protect terminals from exposure to other metal with packing, masking or electrical tape so they do not cause a fire while being transported. Never dispose of a battery in a fire because it may explode.

Battery Warning

- Do not expose the battery to sunlight, fire or heat.
- Do not disassemble, open or cut the battery.
- Do not store the battery in high-temperature area.
- Be careful of a short circuit of the battery socket. Do not store in a box or drawer in which there are other metal materials or coins. It might cause a short circuit.
- Do not remove the packing of the battery before using.
- Do not pressure any physical shock into the battery.
- In case of leakage of the battery, do not expose your skin or eye to the leakage. If exposed, rinse with fresh water enough and see a doctor immediately.
- Do not use other chargers except for the charger in the S1 package.
- Check the battery's '+' and '-', and insert it properly into S1 battery slot.
- Do not use other batteries that are made not for S1.
- Do not mix other kinds of batteries in one device (ex, different manufacturer, capacity, or form).
- Keep the battery away from small children. If swallowed, see a doctor immediately.
- Purchase right batteries to S1 always.
- Keep the battery clean and dry.
- In case of battery pollution, clean the battery socket with a dry cloth.
- Batteries should be charged before using. Follow the manufacturer's guideline of the battery charger and use proper charger according to the S1 manual.
- Do not overcharge the battery, if the battery is not used for a long time.
- Normally, a battery's best performance is done at the room temperature, 20°C(68°F) ± 5°C(9°F).
- Use the battery for the original purpose only.
- Separate the battery from the S1, in case of no use for a long time.
- Do not open or fix the battery. Ask REMOVU C/S Center of the battery related issues.
- Do not store the battery with coins, keys, neckless or metal materials. It might cause fire, if the battery's slot is contacted with metal materials.
- Keep the battery dry, S1 gimbal protects the battery from the water leakage. Do not wet the battery. Otherwise, it might cause fire or electric shock. Battery damage by water is not covered by warranty service.
- Use REMOVU S1's genuine battery only.

10. Warranty Information

Refund and Replacement Policy

Essel-T Co., LTD. ("Essel-T") guarantees refund and replacement as the following conditions.

- Refund can be requested within 7 days of the delivery date (subject to actual date the product was received)
- Replacement can be requested within 14 days of delivery date (subject to actual date the product was received)

Please contact REMOVU Support Team or the authorized distributor of REMOVU from whom you purchased your product for more details. If you request refund or replacement to Essel-T directly, you will be required to fill out a Repair Form which should be sent to us with the defective unit.

A refund will be provided as the following conditions:

1. Within 7 days of delivery, if the product has not been activated and is still in new or like-new condition;
2. Within 7 days of delivery, if the product has a manufacturing defect;

A refund will NOT be provided as the following conditions:

1. The refund was requested beyond 7 days of delivery;
2. Product returned for refund does not include all original accessories, components, and packaging or any item is not in new or like-new condition, i.e. with cracks, dents or scratches;
3. Proof-of-purchase or receipts are not provided, or are believed to have been forged or tampered with;
4. Product defects or damage has been caused by unauthorized use, modification of the product, including accident, improper storage, exposure to moisture, entry of foreign bodies (e.g. sand or dirt), neglect, or unusual physical, electrical or electromechanical stress;
5. Damage was caused to the product by external causes such as collision with an object, fire, flooding, dirt, windstorm, lightning, earthquake, exposure to weather conditions, theft, blown fuse, or improper use of any electrical source;
6. The product has not been sent back to Essel-T within 7 days after refund confirmation from Essel-T;

A replacement will be provided as the following conditions:

1. Within 14 days of delivery, if the product has sustained damage in delivery process;
2. Within 14 days of delivery, if the product purchased does not match the original description of the product in one or more significant respects;
3. Within 14 days of delivery, if the product has a manufacturing defect(s);

A replacement will NOT be provided as the following conditions:

1. The replacement was requested beyond 14 days of delivery;
2. Proof-of-purchase or receipts are not provided, or are believed to have been forged or tampered with;
3. Product has no manufacturing defects after appropriate tests are conducted by Essel-T Technical Support Team;
4. Product defects or damage has been caused by unauthorized use, modification of the product, including accident, improper storage, exposure to moisture, entry of foreign bodies (e.g. sand or dirt), neglect, or unusual physical, electrical or electromechanical stress;
5. Damage was caused to the product by external causes such as collision with an object, fire, flooding, dirt, windstorm, lightning, earthquake, exposure to weather conditions, theft, blown fuse, or improper use of any electrical source;

Warranty Service

Essel-T Co., LTD. ("Essel-T") warrants that Essel-T's devices and accessories ("Products") are free from defects in material and workmanship under normal use and service for the period commencing upon the date of purchase by the first consumer purchaser and continuing for 1 year period of time after that date. If the problem is not covered under the Essel-T Warranty Service, you may have to pay for the cost of return delivery and testing the product.

The following situations are not covered by the Essel-T Warranty Service:

1. Defects or damage resulting from accident, misuse, abnormal use, abnormal conditions, improper storage, exposure to liquid, moisture, dampness, sand or dirt, neglect, or unusual physical, electrical or electromechanical stress;
2. Scratches, dents and cosmetic damage, unless caused by Essel-T;
3. Defects or damage resulting from excessive force or use of a metallic object when pressing on a touch screen;
4. Equipment that has the serial number or the enhancement data code removed, defaced, damaged, altered or made illegible;
5. Ordinary wear and tear;
6. Defects or damage resulting from the use of Product in conjunction or connection with accessories, products, or ancillary/peripheral equipment not furnished or approved by Essel-T;
7. Defects or damage resulting from improper testing, operation, maintenance, installation, service, or adjustment not furnished or approved by Essel-T;
8. Defects or damage resulting from external causes such as collision with an object, fire, flooding, dirt, windstorm, lightning, earthquake, exposure to weather conditions, theft, blown fuse, or improper use of any electrical source;
9. The battery has been charged by a battery charger not specified or approved by Essel-T for charging the battery;

Essential Information for Warranty Service

1. Customers are responsible for shipping costs when returning product(s) for repair or replacement under the Essel-T Warranty Service.
2. Technical Support Team will investigate the returned product to identify the problem. If the product has defect itself, Essel-T will pay all cost about repair and delivery cost for sending the repaired product back to the customer.
3. If Essel-T determines that the product is not covered under the our Warranty Service, the customer will have to pay the cost of repair and delivery cost.

Customer Paid Repair Service

Essel-T Co., LTD. ("Essel-T") also provides our customers with customer paid repair service for products that do not meet the conditions of our Warranty Service. For the paid repair services, we offer, you will be charged for diagnostics, materials, repair and delivery.

FCC Compliance Statement

This device complies with part 15 of the FCC rules. Operation is subject to the following two conditions: (1) This device may not cause harmful interference, and (2) this device must accept any interference received, including interference that may cause undesired operation.

FCC Interference Statement

This equipment has been tested and found to comply with the limits for a Class B digital device, pursuant to part 15 of the FCC Rules. These limits are designed to provide reasonable protection against harmful interference in a residential installation. This equipment generates, uses and can radiate radio frequency energy and, if not installed and used in accordance with the instructions, may cause harmful interference to radio communications. However, there is no guarantee that interference will not occur in a particular installation. If this equipment does cause harmful interference to radio or television reception, which can be determined by turning the equipment off and on, the user is encouraged to correct the interference by one of the following measures:

• Reorient or relocate the receiving antenna.

• Increase the separation between the equipment and receiver.

• Connect the equipment into an outlet on a circuit different from which the receiver is connected.
• Consult the dealer or an experienced radio/TV technician for help.

FCC Caution

Any changes or modifications not expressly approved by the party responsible for compliance could void the user's authority to operate this equipment. This transmitter must not be co-located or operating in conjunction with any other antenna or transmitter.

REMOVU®

www.removu.com

Made for GoPro® HERO Cameras

Copyright 2016 Essel-T Co., Ltd. All rights reserved.
REMOVU® is a trademark of Essel-T Co., Ltd. registered in the U.S. and other countries.
GoPro is a trademark of GoPro Inc. registered in the U.S. and other countries.