ESP8685-WROOM-07

Datasheet

2.4 GHz Wi-Fi (802.11 b/g/n) and Bluetooth® 5 module
Built around ESP8685 series of SoC, RISC-V single-core microprocessor
2 MB or 4 MB flash in chip package
3 GPIOs
Solder pad for external monopole antenna

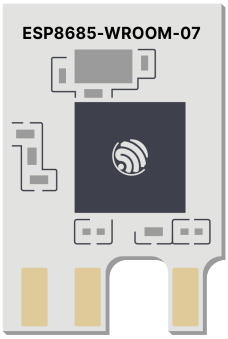

ESP8685-WROOM-07

Pre-release v0.5
Espressif Systems
Copyright © 2022

1 Module Overview

Note:

Check the link or the QR code to make sure that you use the latest version of this document:
https://espressif.com/sites/default/files/documentation/esp8685-wroom-07_datasheet_en.pdf

1.1 Features

CPU and On-Chip Memory

- ESP8685H2 or ESP8685H4 embedded, 32-bit RISC-V single-core processor, up to 160 MHz
- 384 KB ROM
- 400 KB SRAM (16 KB for cache)
- 8 KB SRAM in RTC
- 2 MB or 4 MB flash in chip package

Wi-Fi

- IEEE 802.11 b/g/n-compliant
- Supports 20 MHz, 40 MHz bandwidth in 2.4 GHz band
- 1T1R mode with data rate up to 150 Mbps
- Wi-Fi Multimedia (WMM)
- TX/RX A-MPDU, TX/RX A-MSDU
- Immediate Block ACK
- Fragmentation and defragmentation
- Transmit opportunity (TXOP)
- Automatic Beacon monitoring (hardware TSF)
- 4 × virtual Wi-Fi interfaces
- Simultaneous support for Infrastructure BSS in Station mode, SoftAP mode, Station + SoftAP mode, and promiscuous mode
  Note that when ESP8685 series scans in Station mode, the SoftAP channel will change along with the Station channel
- 802.11mc FTM
- Operating frequency: 2412 ~ 2462 MHz

Bluetooth®

- Bluetooth LE: Bluetooth 5, Bluetooth mesh
- Speed: 125 Kbps, 500 Kbps, 1 Mbps, 2 Mbps
- Advertising extensions
- Multiple advertisement sets
- Channel selection algorithm #2

Peripherals

- GPIO, SPI, UART, I2C, I2S, remote control peripheral, LED PWM controller, general DMA controller, TWAI® controller (compatible with ISO 11898-1, i.e. CAN Specification 2.0), USB Serial/JTAG controller, temperature sensor, SAR ADC, general-purpose timers, watchdog timers

Integrated Components on Module

- 40 MHz crystal oscillator

Antenna Options

- Solder pad for external monopole antenna

Operating Conditions

- Operating voltage/Power supply: 3.0 ~ 3.6 V
- Operating ambient temperature: –40 ~ 105 °C

1.2 Description

ESP8685-WROOM-07 is a powerful, generic Wi-Fi and Bluetooth LE module. This module is an ideal choice for smart homes, industrial automation, health care, consumer electronics, etc.

ESP8685-WROOM-07 can be vertically soldered to a PCB board via wave soldering. The module has 3 available GPIOs.

ESP8685-WROOM-07 can be connected to an external monopole antenna via soldering.

The ordering information for ESP8685-WROOM-07 is as follows:

Table 1: ESP8685-WROOM-07 Ordering Information

Module	Ordering code	Chip Embedded	Module Dimensions (mm)
ESP8685-WROOM-07	ESP8685-WROOM-07-H2	ESP8685H2	8.5 × 12.7 × 2.6
	ESP8685-WROOM-07-H4	ESP8685H4	

The ESP8685H2 chip and the ESP8685H4 chip fall into the same category, namely ESP8685 chip series. ESP8685 series of chips have a 32-bit RISC-V single-core processor. They integrate a rich set of peripherals, ranging from UART, I2C, I2S, remote control peripheral, LED PWM controller, general DMA controller, TWAI® controller, USB Serial/JTAG controller, temperature sensor, and ADC.

The ESP8685H2 chip and the ESP8685H4 chip vary only in the size of the flash in chip package. For details, please refer to *ESP8685 Series Comparison* in *ESP8685 Datasheet*.

1.3 Applications

- Smart Home
  - Light control
  - Smart button
  - Smart plug
  - Indoor positioning
- Industrial Automation
  - Industrial robot
  - Mesh network
  - Human machine interface (HMI)
  - Industrial field bus
- Health Care
  - Health monitor
  - Baby monitor
- Consumer Electronics
  - Smart watch and bracelet
  - Over-the-top (OTT) devices
  - Wi-Fi speaker
  - Logger toys and proximity sensing toys
- Smart Agriculture
  - Smart greenhouse
  - Smart irrigation
  - Agriculture robot
- Retail and Catering
  - POS machines
  - Service robot
- Audio Device
  - Internet music players
  - Live streaming devices
  - Internet radio players
- Generic Low-power IoT Sensor Hubs

- Generic Low-power IoT Data Loggers

Contents

1 Module Overview 2
1.1 Features 2
1.2 Description 3
1.3 Applications 3
2 Block Diagram 8
3 Pin Definitions 9
3.1 Pin Layout 9
3.2 Pin Description 9
3.3 Strapping Pins 10
4 Electrical Characteristics 12
4.1 Absolute Maximum Ratings 12
4.2 Recommended Operating Conditions 12
4.3 DC Characteristics (3.3 V, 25 °C) 12
4.4 Current Consumption Characteristics 13
4.5 Wi-Fi Radio 13
4.5.1 Wi-Fi RF Standards 13
4.5.2 Wi-Fi RF Transmitter (TX) Specifications 14
4.5.3 Wi-Fi RF Receiver (RX) Specifications 15
4.6 Bluetooth LE Radio 16
4.6.1 Bluetooth LE RF Transmitter (TX) Specifications 16
4.6.2 Bluetooth LE RF Receiver (RX) Specifications 18
5 Module Schematics 20
6 Peripheral Schematics 21
7 Physical Dimensions and PCB Land Pattern 22
7.1 Physical Dimensions 22
7.2 Recommended PCB Land Pattern 23
8 Product Handling 24
8.1 Storage Conditions 24
8.2 Electrostatic Discharge (ESD) 24
8.3 Wave Soldering Profile 24
8.4 Ultrasonic Vibration 24
9 Related Documentation and Resources 25
Revision History 26

List of Tables

1	ESP8685-WROOM-07 Ordering Information	3
2	Pin Definitions	9
3	Test Point Definitions	9
4	Strapping Pins	11
5	Parameter Descriptions of Setup and Hold Times for the Strapping Pins	11
6	Absolute Maximum Ratings	12
7	Recommended Operating Conditions	12
8	DC Characteristics (3.3 V, 25 °C)	12
9	Current Consumption Depending on RF Modes	13
10	Current Consumption Depending on Work Modes	13
11	Wi-Fi RF Standards	13
11	Wi-Fi RF Standards	14
12	TX Power with Spectral Mask and EVM Meeting 802.11 Standards	14
13	TX EVM Test	14
14	RX Sensitivity	15
15	Maximum RX Level	15
16	RX Adjacent Channel Rejection	16
17	Transmitter General Characteristics	16
18	Transmitter Characteristics - Bluetooth LE 1 Mbps	16
19	Transmitter Characteristics - Bluetooth LE 2 Mbps	17
20	Transmitter Characteristics - Bluetooth LE 125 Kbps	17
21	Transmitter Characteristics - Bluetooth LE 500 Kbps	17
22	Receiver Characteristics - Bluetooth LE 1 Mbps	18
23	Receiver Characteristics - Bluetooth LE 2 Mbps	18
24	Receiver Characteristics - Bluetooth LE 125 Kbps	19
25	Receiver Characteristics - Bluetooth LE 500 Kbps	19

List of Figures

1 ESP8685-WROOM-07 Block Diagram 8
2 Pin Layout 9
3 Setup and Hold Times for the Strapping Pins 11
4 ESP8685-WROOM-07 Schematics 20
5 Peripheral Schematics 21
6 Physical Dimensions 22
7 Recommended PCB Land Pattern 23
8 Wave Soldering Profile 24

2 Block Diagram

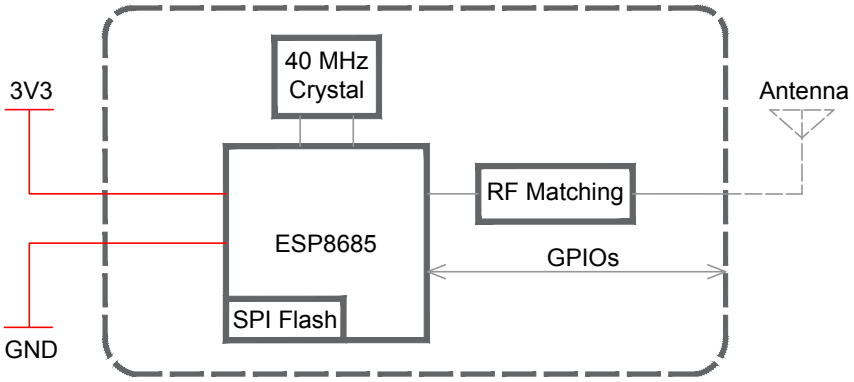

Figure 1: ESP8685-WROOM-07 Block Diagram

3 Pin Definitions

3.1 Pin Layout

The pin diagram below shows the approximate location of pins on the module. For the actual diagram drawn to scale, please refer to Figure 7.1 *Physical Dimensions*.

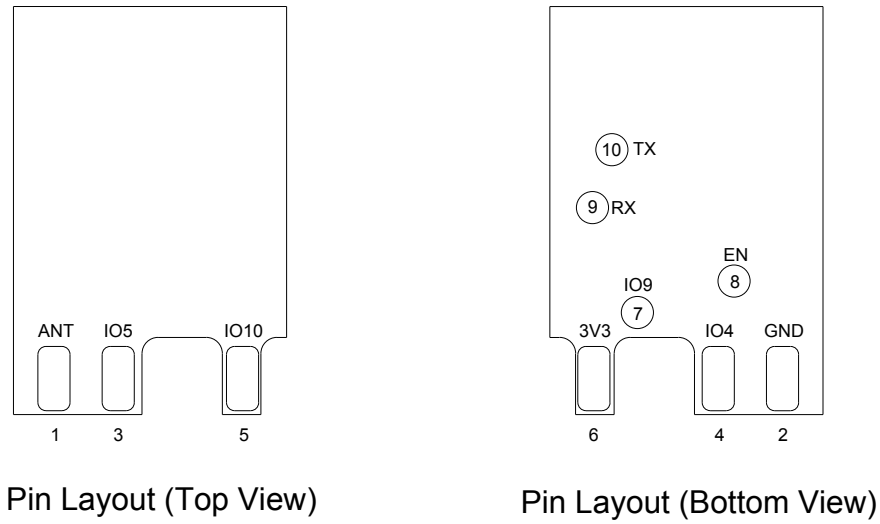

Figure 2: Pin Layout

3.2 Pin Description

The module has 6 pins. See pin definitions in Table 2.

Table 2: Pin Definitions

Name	No.	Type[1]	Function
ANT	1	—	Antenna
GND	2	P	Ground
IO5	3	I/O/T	GPIO5, ADC2_CH0, FSPIWP, MTDI, LED PWM
IO4	4	I/O/T	GPIO4, ADC1_CH4, FSPIHD, MTMS, LED PWM
IO10	5	I/O/T	GPIO10, FSPICS0, LED PWM
3V3	6	P	Power supply

[1] P: power supply; I: input; O: output; T: high impedance.

Table 3: Test Point Definitions

Name	No.	Type[1]	Function
IO9	7	I/O/T	GPIO9

Cont'd on next page

Table 3 – cont'd from previous page

Name	No.	Type[1]	Function
EN	8	I	High: on, enables the chip. Low: off, the chip powers off. Default: internally pulled-up.
RX	9	I/O/T	GPIO20, U0RXD
TX	10	I/O/T	GPIO21, U0TXD

[1] P: power supply; I: input; O: output; T: high impedance.

3.3 Strapping Pins

Note:
The content below is excerpted from Section Strapping Pins in *ESP8685 Datasheet*. For the strapping pin mapping between the chip and modules, please refer to Chapter 5 *Module Schematics*.

ESP8685 series has three strapping pins:

- GPIO2
- GPIO8
- GPIO9

Software can read the values of GPIO2, GPIO8 and GPIO9 from GPIO_STRAPPING field in GPIO_STRAP_REG register.

During the chip's system reset, the latches of the strapping pins sample the voltage level as strapping bits of "0" or "1", and hold these bits until the chip is powered down or shut down.

Types of system reset include:

- power-on reset
- RTC watchdog reset
- brownout reset
- analog super watchdog reset
- crystal clock glitch detection reset

By default, GPIO9 is connected to the internal weak pull-up resistor. If GPIO9 is not connected or connected to an external high-impedance circuit, the latched bit value will be "1"

To change the strapping bit values, you can apply the external pull-down/pull-up resistances, or use the host MCU's GPIOs to control the voltage level of these pins when powering on ESP8685 series.

After reset, the strapping pins work as normal-function pins.

Table 4 lists detailed booting configurations of the strapping pins.

Table 4: Strapping Pins

Booting Mode [1]			
Pin	Default	SPI Boot	Download Boot
GPIO2	N/A	1	1
GPIO8	N/A	Don't care	1
GPIO9	Internal weak pull-up	1	0
Enabling/Disabling ROM Messages Print During Booting			
Pin	Default	Functionality	
GPIO8	N/A	When the value of eFuse field EFUSE_UART_PRINT_CONTROL is 0 (default), print is enabled and not controlled by GPIO8. 1, if GPIO8 is 0, print is enabled; if GPIO8 is 1, it is disabled. 2, if GPIO8 is 0, print is disabled; if GPIO8 is 1, it is enabled. 3, print is disabled and not controlled by GPIO8.	

[1] The strapping combination of GPIO8 = 0 and GPIO9 = 0 is invalid and will trigger unexpected behavior.

Figure 3 shows the setup and hold times for the strapping pins before and after the CHIP_EN signal goes high. Details about the parameters are listed in Table 5.

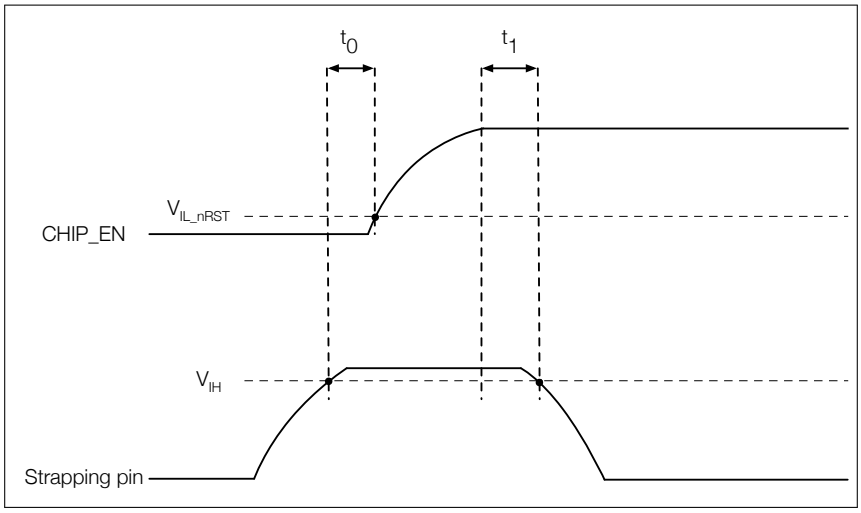

Figure 3: Setup and Hold Times for the Strapping Pins

Table 5: Parameter Descriptions of Setup and Hold Times for the Strapping Pins

Parameter	Description	Min (ms)
t_0	Setup time before CHIP_EN goes from low to high	0
t_1	Hold time after CHIP_EN goes high	3

4 Electrical Characteristics

4.1 Absolute Maximum Ratings

Stresses above those listed in *Absolute Maximum Ratings* may cause permanent damage to the device. These are stress ratings only and functional operation of the device at these or any other conditions beyond those indicated under *Recommended Operating Conditions* is not implied. Exposure to absolute-maximum-rated conditions for extended periods may affect device reliability.

Table 6: Absolute Maximum Ratings

Symbol	Parameter	Min	Max	Unit
VDD33	Power supply voltage	–0.3	3.6	V
T_{STORE}	Storage temperature	–40	105	°C

4.2 Recommended Operating Conditions

Table 7: Recommended Operating Conditions

Symbol	Parameter	Min	Typ	Max	Unit
VDD33	Power supply voltage	3.0	3.3	3.6	V
I_{VDD}	Current delivered by external power supply	0.5	—	—	A
T_A	Operating ambient temperature	–40	—	105	°C

4.3 DC Characteristics (3.3 V, 25 °C)

Table 8: DC Characteristics (3.3 V, 25 °C)

Symbol	Parameter	Min	Typ	Max	Unit
C_{IN}	Pin capacitance	—	2	—	pF
V_{IH}	High-level input voltage	0.75 × VDD[1]	—	VDD[1]+ 0.3	V
V_{IL}	Low-level input voltage	–0.3	—	0.25 × VDD[1]	V
I_{IH}	High-level input current	—	—	50	nA
I_{IL}	Low-level input current	—	—	50	nA
V_{OH}[2]	High-level output voltage	0.8 × VDD[1]	—	—	V
V_{OL}[2]	Low-level output voltage	—	—	0.1 × VDD[1]	V
I_{OH}	High-level source current (VDD[1]= 3.3 V, V_{OH} >= 2.64 V, PAD_DRIVER = 3)	—	40	—	mA
I_{OL}	Low-level sink current (VDD[1]= 3.3 V, V_{OL} = 0.495 V, PAD_DRIVER = 3)	—	28	—	mA
R_{PU}	Pull-up resistor	—	45	—	kΩ
R_{PD}	Pull-down resistor	—	45	—	kΩ
V_{IH_nRST}	Chip reset release voltage	0.75 × VDD[1]	—	VDD[1]+ 0.3	V
V_{IL_nRST}	Chip reset voltage	–0.3	—	0.25 × VDD[1]	V

[1] VDD is the I/O voltage for pins of a particular power domain.

[2] V_{OH} and V_{OL} are measured using high-impedance load.

4.4 Current Consumption Characteristics

With the use of advanced power-management technologies, the module can switch between different power modes. For details on different power modes, please refer to Section *Low Power Management* in *ESP8685 Datasheet*.

Table 9: Current Consumption Depending on RF Modes

Work mode	Description		Peak (mA)
Active (RF working)	TX	802.11b, 1 Mbps, @20 dBm	320
		802.11g, 54 Mbps, @17.5 dBm	269
		802.11n, HT20, MCS7, @17 dBm	262
		802.11n, HT40, MCS7, @16.5 dBm	196
	RX	802.11b/g/n, HT20	79
		802.11n, HT40	81

[1] The current consumption measurements are taken with a 3.3 V supply at 25 °C of ambient temperature at the RF port. All transmitters' measurements are based on a 100% duty cycle.

[2] The current consumption figures for in RX mode are for cases when the peripherals are disabled and the CPU idle.

Table 10: Current Consumption Depending on Work Modes

Work mode	Description		Typ	Unit
Modem-sleep[1, 2]	The CPU is powered on[3]	160 MHz	20	mA
		80 MHz	15	mA
Light-sleep	—		130	μA
Deep-sleep	RTC timer + RTC memory		5	μA
Power off	CHIP_EN is set to low level, the chip is powered off		1	μA

[1] The current consumption figures in Modem-sleep mode are for cases where the CPU is powered on and the cache idle.

[2] When Wi-Fi is enabled, the chip may switch between Active and Modem-sleep modes. Therefore, current consumption changes accordingly.

[3] In practice, software can adjust CPU's frequency according to CPU load to reduce current consumption.

4.5 Wi-Fi Radio

4.5.1 Wi-Fi RF Standards

Table 11: Wi-Fi RF Standards

Name	Description
Center frequency range of operating channel [1]	2412 ~ 2462 MHz
Wi-Fi wireless standard	IEEE 802.11b/g/n

Table 11: Wi-Fi RF Standards

Name		Description
Data rate	20 MHz	11b: 1, 2, 5.5 and 11 Mbps 11g: 6, 9, 12, 18, 24, 36, 48, 54 Mbps 11n: MCS0-7, 72.2 Mbps (Max)
	40 MHz	11n: MCS0-7, 150 Mbps (Max)
Antenna type		PCB antenna pin soldering for external

[1] Device should operate in the center frequency range allocated by regional regulatory authorities. Target center frequency range is configurable by software.

4.5.2 Wi-Fi RF Transmitter (TX) Specifications

Target TX power is configurable based on device or certification requirements. The default characteristics are provided in Table 12.

Table 12: TX Power with Spectral Mask and EVM Meeting 802.11 Standards

Rate	Min (dBm)	Typ (dBm)	Max (dBm)
802.11b, 1 Mbps	—	20.0	—
802.11b, 11 Mbps	—	20.0	—
802.11g, 6 Mbps	—	19.0	—
802.11g, 54 Mbps	—	17.5	—
802.11n, HT20, MCS0	—	18.5	—
802.11n, HT20, MCS7	—	17.0	—
802.11n, HT40, MCS0	—	18.0	—
802.11n, HT40, MCS7	—	16.5	—

Table 13: TX EVM Test

Rate	Min (dB)	Typ (dB)	SL[1] (dB)
802.11b, 1 Mbps, @20 dBm	—	–25	–10
802.11b, 11 Mbps, @20 dBm	—	–25	–10
802.11g, 6 Mbps, @19 dBm	—	–24	–5
802.11g, 54 Mbps, @17.5 dBm	—	–30	–25
802.11n, HT20, MCS0, @18.5 dBm	—	–25	–5
802.11n, HT20, MCS7, @17 dBm	—	–31	–27
802.11n, HT40, MCS0, @18 dBm	—	–27	–5
802.11n, HT40, MCS7, @16.5 dBm	—	–30	–27

[1] SL stands for standard limit value.

4.5.3 Wi-Fi RF Receiver (RX) Specifications

Table 14: RX Sensitivity

Rate	Min (dBm)	Typ (dBm)	Max (dBm)
802.11b, 1 Mbps	—	–98.0	—
802.11b, 2 Mbps	—	–96.0	—
802.11b, 5.5 Mbps	—	–93.5	—
802.11b, 11 Mbps	—	–88.5	—
802.11g, 6 Mbps	—	–93.0	—
802.11g, 9 Mbps	—	–91.5	—
802.11g, 12 Mbps	—	–90.5	—
802.11g, 18 Mbps	—	–88.0	—
802.11g, 24 Mbps	—	–85.5	—
802.11g, 36 Mbps	—	–82.0	—
802.11g, 48 Mbps	—	–78.0	—
802.11g, 54 Mbps	—	–76.5	—
802.11n, HT20, MCS0	—	–93.0	—
802.11n, HT20, MCS1	—	–90.5	—
802.11n, HT20, MCS2	—	–88.0	—
802.11n, HT20, MCS3	—	–84.5	—
802.11n, HT20, MCS4	—	–81.5	—
802.11n, HT20, MCS5	—	–77.5	—
802.11n, HT20, MCS6	—	–75.5	—
802.11n, HT20, MCS7	—	–74.5	—
802.11n, HT40, MCS0	—	–90.0	—
802.11n, HT40, MCS1	—	–87.5	—
802.11n, HT40, MCS2	—	–85.0	—
802.11n, HT40, MCS3	—	–81.5	—
802.11n, HT40, MCS4	—	–78.5	—
802.11n, HT40, MCS5	—	–74.5	—
802.11n, HT40, MCS6	—	–72.5	—
802.11n, HT40, MCS7	—	–71.0	—

Table 15: Maximum RX Level

Rate	Min (dBm)	Typ (dBm)	Max (dBm)
802.11b, 1 Mbps	—	5	—
802.11b, 11 Mbps	—	5	—
802.11g, 6 Mbps	—	5	—
802.11g, 54 Mbps	—	0	—
802.11n, HT20, MCS0	—	5	—

Cont'd on next page

Table 15 – cont'd from previous page

Rate	Min (dBm)	Typ (dBm)	Max (dBm)
802.11n, HT20, MCS7	—	0	—
802.11n, HT40, MCS0	—	5	—
802.11n, HT40, MCS7	—	0	—

Table 16: RX Adjacent Channel Rejection

Rate	Min (dB)	Typ (dB)	Max (dB)
802.11b, 1 Mbps	—	35	—
802.11b, 11 Mbps	—	35	—
802.11g, 6 Mbps	—	31	—
802.11g, 54 Mbps	—	20	—
802.11n, HT20, MCS0	—	31	—
802.11n, HT20, MCS7	—	16	—
802.11n, HT40, MCS0	—	25	—
802.11n, HT40, MCS7	—	11	—

4.6 Bluetooth LE Radio

4.6.1 Bluetooth LE RF Transmitter (TX) Specifications

Table 17: Transmitter General Characteristics

Parameter	Min	Typ	Max	Unit
RF transmit power	—	0	—	dBm
Gain control step	—	3	—	dB
RF power control range	–27	—	18	dBm

Table 18: Transmitter Characteristics - Bluetooth LE 1 Mbps

Parameter	Description	Min	Typ	Max	Unit
In-band emissions	F = F0 ± 2 MHz	—	–37.62	—	dBm
	F = F0 ± 3 MHz	—	–41.95	—	dBm
	F = F0 ± > 3 MHz	—	–44.48	—	dBm
Modulation characteristics	$\Delta f1_{avg}$	—	245.00	—	kHz
	$\Delta f2_{max}$	—	208.00	—	kHz
	$\Delta f2_{avg}/\Delta f1_{avg}$	—	0.93	—	—
Carrier frequency offset	—	—	–9.00	—	kHz
Carrier frequency drift	$\lvert f_0 - f_n \rvert_{n=2,\,3,\,4,\,..k}$	—	1.17	—	kHz
	$\lvert f_1 - f_0 \rvert$	—	0.30	—	kHz
	$\lvert f_n - f_{n-5} \rvert_{n=6,\,7,\,8,\,..k}$	—	4.90	—	kHz

Table 19: Transmitter Characteristics - Bluetooth LE 2 Mbps

Parameter	Description	Min	Typ	Max	Unit
In-band emissions	F = F0 ± 4 MHz	—	–43.55	—	dBm
	F = F0 ± 5 MHz	—	–45.26	—	dBm
	F = F0 ± > 5 MHz	—	–47.00	—	dBm
Modulation characteristics	$\Delta f1_{avg}$	—	497.00	—	kHz
	$\Delta f2_{max}$	—	398.00	—	kHz
	$\Delta f2_{avg}/\Delta f1_{avg}$	—	0.95	—	—
Carrier frequency offset	—	—	–9.00	—	kHz
Carrier frequency drift	$\lvert f_0 - f_n \rvert_{n=2,\,3,\,4,\,..k}$	—	0.46	—	kHz
	$\lvert f_1 - f_0 \rvert$	—	0.70	—	kHz
	$\lvert f_n - f_{n-5} \rvert_{n=6,\,7,\,8,\,..k}$	—	6.80	—	kHz

Table 20: Transmitter Characteristics - Bluetooth LE 125 Kbps

Parameter	Description	Min	Typ	Max	Unit
In-band emissions	F = F0 ± 2 MHz	—	–37.90	—	dBm
	F = F0 ± 3 MHz	—	–41.00	—	dBm
	F = F0 ± > 3 MHz	—	–42.50	—	dBm
Modulation characteristics	$\Delta f1_{avg}$	—	252.00	—	kHz
	$\Delta f1_{max}$	—	200.00	—	kHz
Carrier frequency offset	—	—	–13.70	—	kHz
Carrier frequency drift	$\lvert f_0 - f_n \rvert_{n=1,\,2,\,3,\,..k}$	—	1.52	—	kHz
	$\lvert f_0 - f_3 \rvert$	—	0.65	—	kHz
	$\lvert f_n - f_{n-3} \rvert_{n=7,\,8,\,9,\,..k}$	—	0.70	—	kHz

Table 21: Transmitter Characteristics - Bluetooth LE 500 Kbps

Parameter	Description	Min	Typ	Max	Unit
In-band emissions	F = F0 ± 2 MHz	—	–37.90	—	dBm
	F = F0 ± 3 MHz	—	–41.30	—	dBm
	F = F0 ± > 3 MHz	—	–42.80	—	dBm
Modulation characteristics	$\Delta f2_{avg}$	—	220.00	—	kHz
	$\Delta f2_{max}$	—	205.00	—	kHz
Carrier frequency offset	—	—	–11.90	—	kHz
Carrier frequency drift	$\lvert f_0 - f_n \rvert_{n=1,\,2,\,3,\,..k}$	—	1.37	—	kHz
	$\lvert f_0 - f_3 \rvert$	—	1.09	—	kHz
	$\lvert f_n - f_{n-3} \rvert_{n=7,\,8,\,9,\,..k}$	—	0.51	—	kHz

4.6.2 Bluetooth LE RF Receiver (RX) Specifications

Table 22: Receiver Characteristics - Bluetooth LE 1 Mbps

Parameter	Description	Min	Typ	Max	Unit
Sensitivity @30.8% PER	—	—	–96	—	dBm
Maximum received signal @30.8% PER	—	—	5	—	dBm
Co-channel C/I	—	—	8	—	dB
Adjacent channel selectivity C/I	F = F0 + 1 MHz	—	–4	—	dB
	F = F0 – 1 MHz	—	–3	—	dB
	F = F0 + 2 MHz	—	–32	—	dB
	F = F0 – 2 MHz	—	–36	—	dB
	F ≥ F0 + 3 MHz[1]	—	—	—	dB
	F ≤ F0 – 3 MHz	—	–39	—	dB
Image frequency	—	—	–29	—	dB
Adjacent channel to image frequency	F = F_{image} + 1 MHz	—	–38	—	dB
	F = F_{image} – 1 MHz	—	–34	—	dB
Out-of-band blocking performance	30 MHz ~ 2000 MHz	—	–9	—	dBm
	2003 MHz ~ 2399 MHz	—	–18	—	dBm
	2484 MHz ~ 2997 MHz	—	–16	—	dBm
	3000 MHz ~ 12.75 GHz	—	–6	—	dBm
Intermodulation	—	—	–44	—	dBm

[1] Refer to the value of Adjacent channel to image frequency when F = F_{image} – 1 MHz.

Table 23: Receiver Characteristics - Bluetooth LE 2 Mbps

Parameter	Description	Min	Typ	Max	Unit
Sensitivity @30.8% PER	—	—	–93	—	dBm
Maximum received signal @30.8% PER	—	—	2	—	dBm
Co-channel C/I	—	—	10	—	dB
Adjacent channel selectivity C/I	F = F0 + 2 MHz	—	–7	—	dB
	F = F0 – 2 MHz	—	–7	—	dB
	F = F0 + 4 MHz[1]	—	—	—	dB
	F = F0 – 4 MHz	—	–34	—	dB
	F ≥ F0 + 6 MHz	—	–39	—	dB
	F ≤ F0 – 6 MHz	—	–39	—	dB
Image frequency	—	—	–27	—	dB
Adjacent channel to image frequency	F = F_{image} + 2 MHz	—	–39	—	dB
	F = F_{image} – 2 MHz[2]	—	—	—	dB
Out-of-band blocking performance	30 MHz ~ 2000 MHz	—	–17	—	dBm
	2003 MHz ~ 2399 MHz	—	–19	—	dBm
	2484 MHz ~ 2997 MHz	—	–16	—	dBm
	3000 MHz ~ 12.75 GHz	—	–22	—	dBm

Cont'd on next page

Table 23 – cont'd from previous page

Parameter	Description	Min	Typ	Max	Unit
Intermodulation	—	—	–40	—	dBm

[1] Refer to the value of Image frequency.

[2] Refer to the value of Adjacent channel selectivity C/I when F = F0 + 2 MHz.

Table 24: Receiver Characteristics - Bluetooth LE 125 Kbps

Parameter	Description	Min	Typ	Max	Unit
Sensitivity @30.8% PER	—	—	–104	—	dBm
Maximum received signal @30.8% PER	—	—	5	—	dBm
Co-channel C/I	—	—	2	—	dB
Adjacent channel selectivity C/I	F = F0 + 1 MHz	—	–6	—	dB
	F = F0 – 1 MHz	—	–5	—	dB
	F = F0 + 2 MHz	—	–40	—	dB
	F = F0 – 2 MHz	—	–42	—	dB
	F $\geq$ F0 + 3 MHz[1]	—	—	—	dB
	F $\leq$ F0 – 3 MHz	—	–46	—	dB
Image frequency	—	—	–34	—	dB
Adjacent channel to image frequency	F = F_{image} + 1 MHz	—	–44	—	dB
	F = F_{image} – 1 MHz	—	–37	—	dB

[1] Refer to the value of Adjacent channel to image frequency when F = F_{image} – 1 MHz.

Table 25: Receiver Characteristics - Bluetooth LE 500 Kbps

Parameter	Description	Min	Typ	Max	Unit
Sensitivity @30.8% PER	—	—	–99	—	dBm
Maximum received signal @30.8% PER	—	—	5	—	dBm
Co-channel C/I	—	—	3	—	dB
Adjacent channel selectivity C/I	F = F0 + 1 MHz	—	–5	—	dB
	F = F0 – 1 MHz	—	–7	—	dB
	F = F0 + 2 MHz	—	–39	—	dB
	F = F0 – 2 MHz	—	–40	—	dB
	F $\geq$ F0 + 3 MHz[1]	—	—	—	dB
	F $\leq$ F0 – 3 MHz	—	–40	—	dB
Image frequency	—	—	–34	—	dB
Adjacent channel to image frequency	F = F_{image} + 1 MHz	—	–43	—	dB
	F = F_{image} – 1 MHz	—	–38	—	dB

[1] Refer to the value of Adjacent channel to image frequency when F = F_{image} – 1 MHz.

5 Module Schematics

This is the reference design of the module.

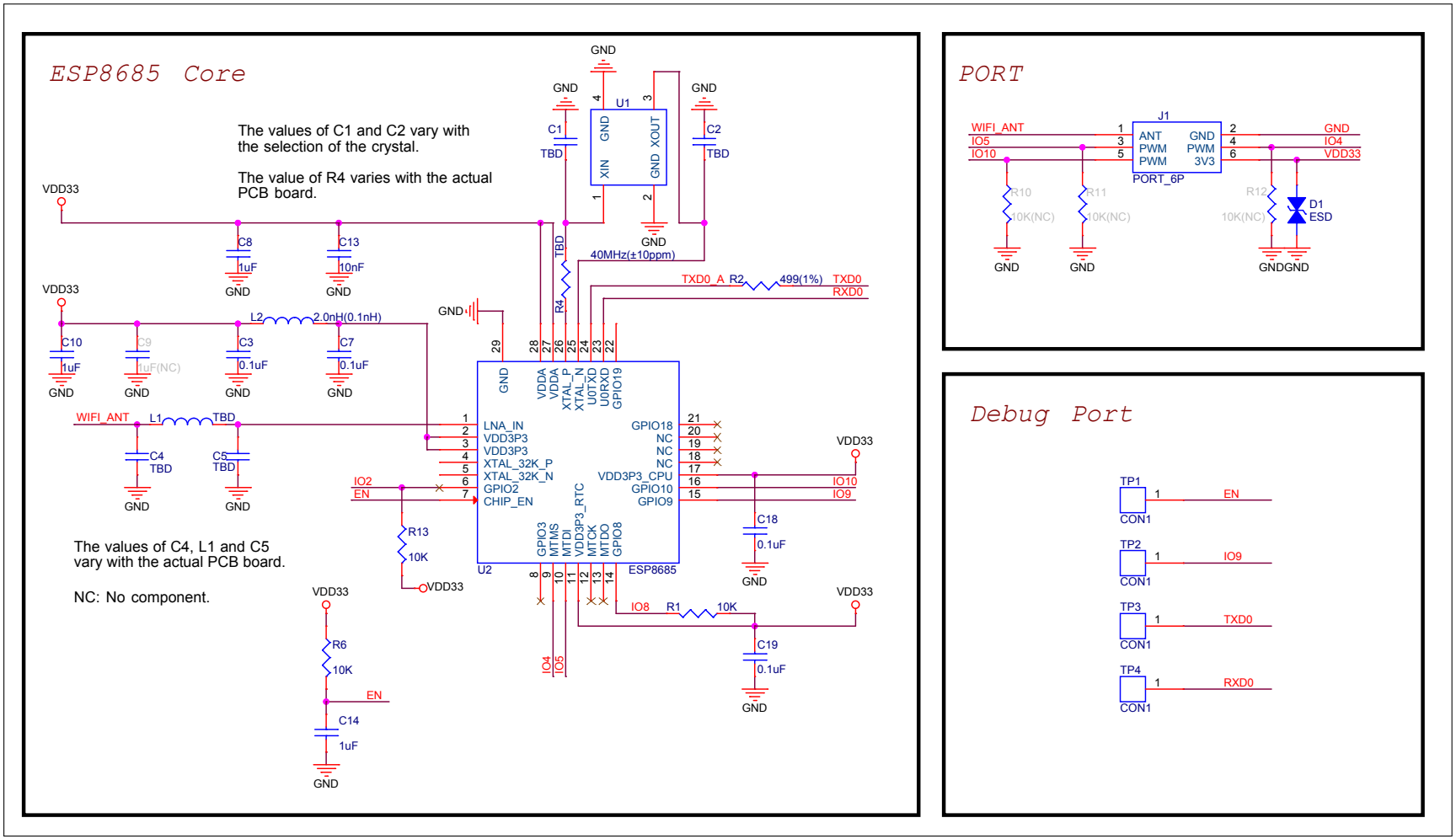

Figure 4: ESP8685-WROOM-07 Schematics

6 Peripheral Schematics

This is the typical application circuit of the module connected with peripheral components (for example, power supply, antenna, reset button, JTAG interface, and UART interface).

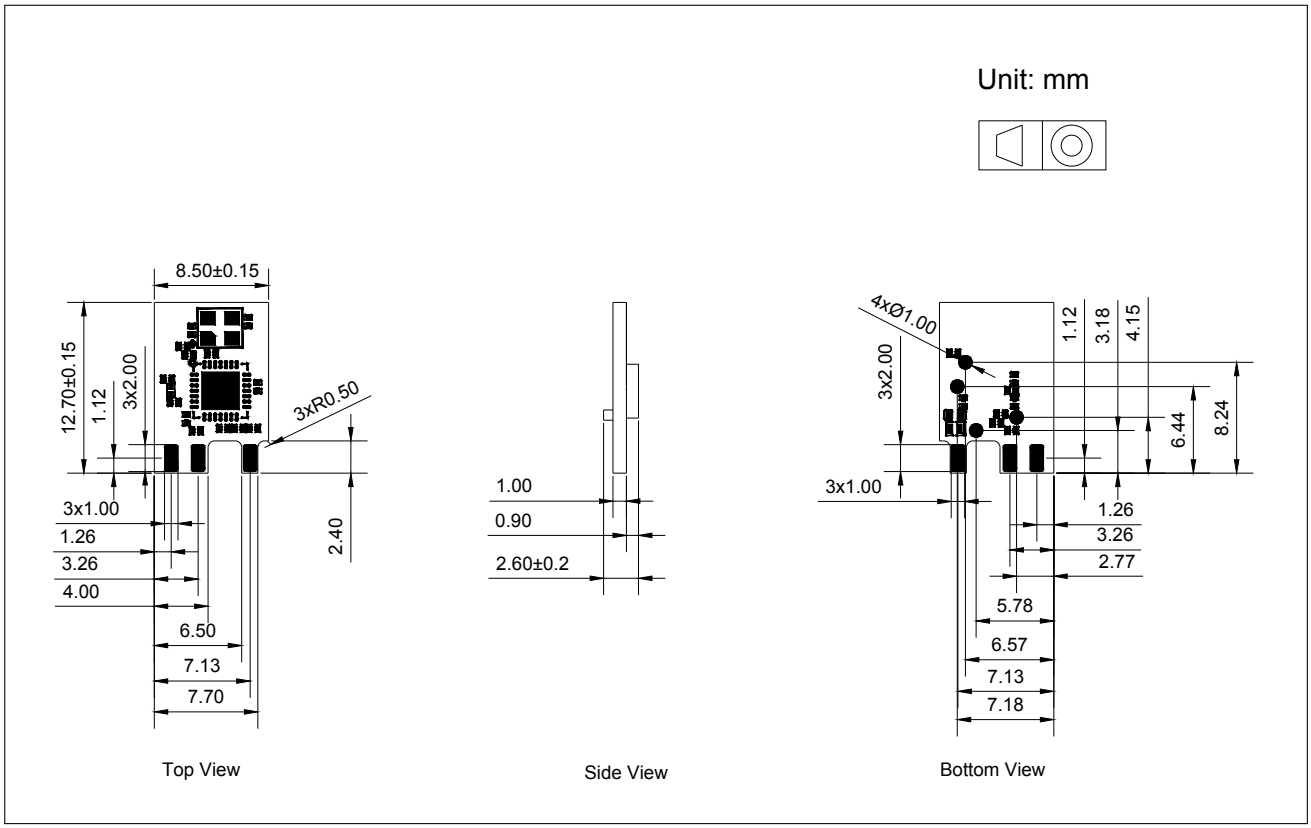

Figure 5: Peripheral Schematics

- To ensure that the power supply to the ESP8685 chip is stable during power-up, it is advised to add an RC delay circuit at the EN pin. The recommended setting for the RC delay circuit is usually R = 10 kΩ and C = 1 μF (such RC delay circuit has already been built into the module). However, specific parameters should be adjusted based on the power-up timing of the module and the power-up and reset sequence timing of the chip.

  For ESP8685's power-up and reset sequence timing diagram, please refer to Section *Power Scheme* in *ESP8685 Datasheet*.

7 Physical Dimensions and PCB Land Pattern

7.1 Physical Dimensions

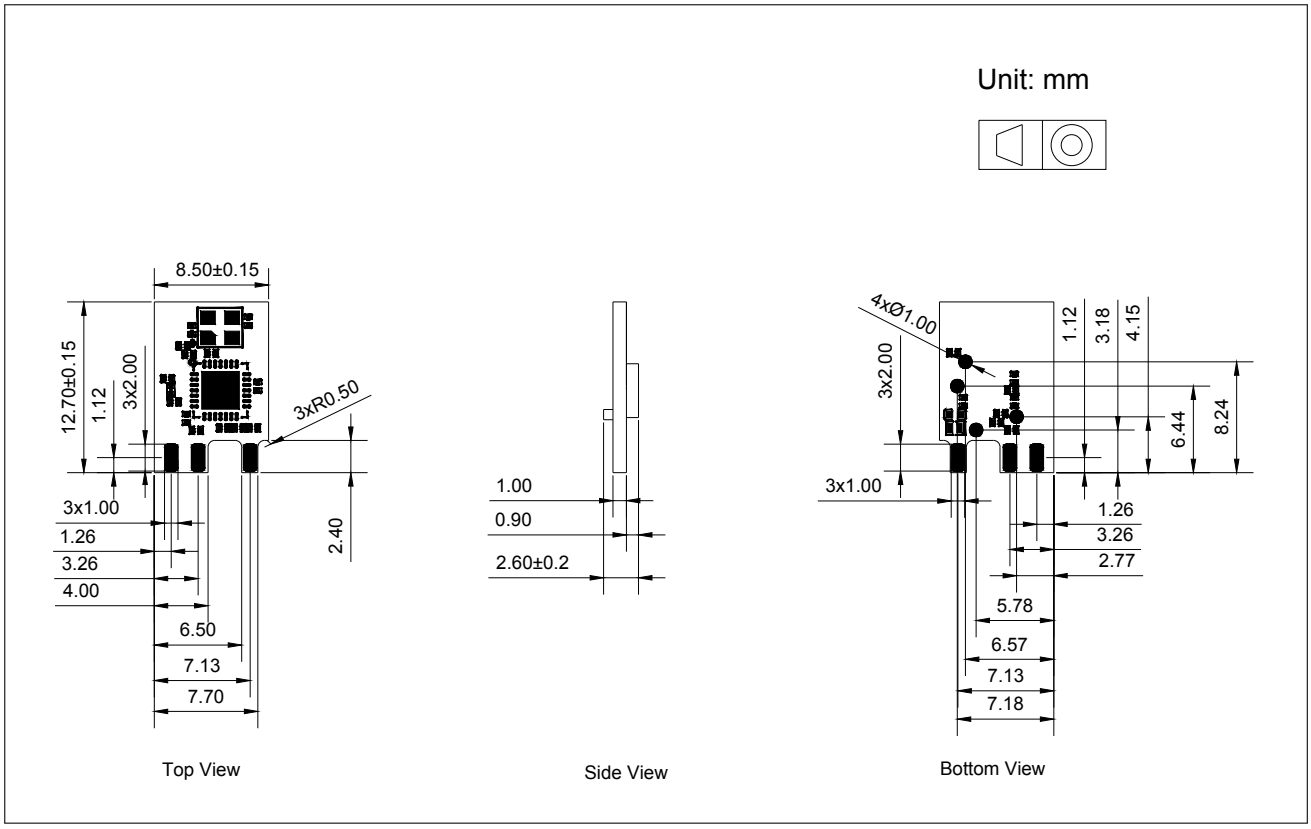

Figure 6: Physical Dimensions

Note:

For information about tape, reel, and product marking, please refer to *Espressif Module Package Information*.

7.2 Recommended PCB Land Pattern

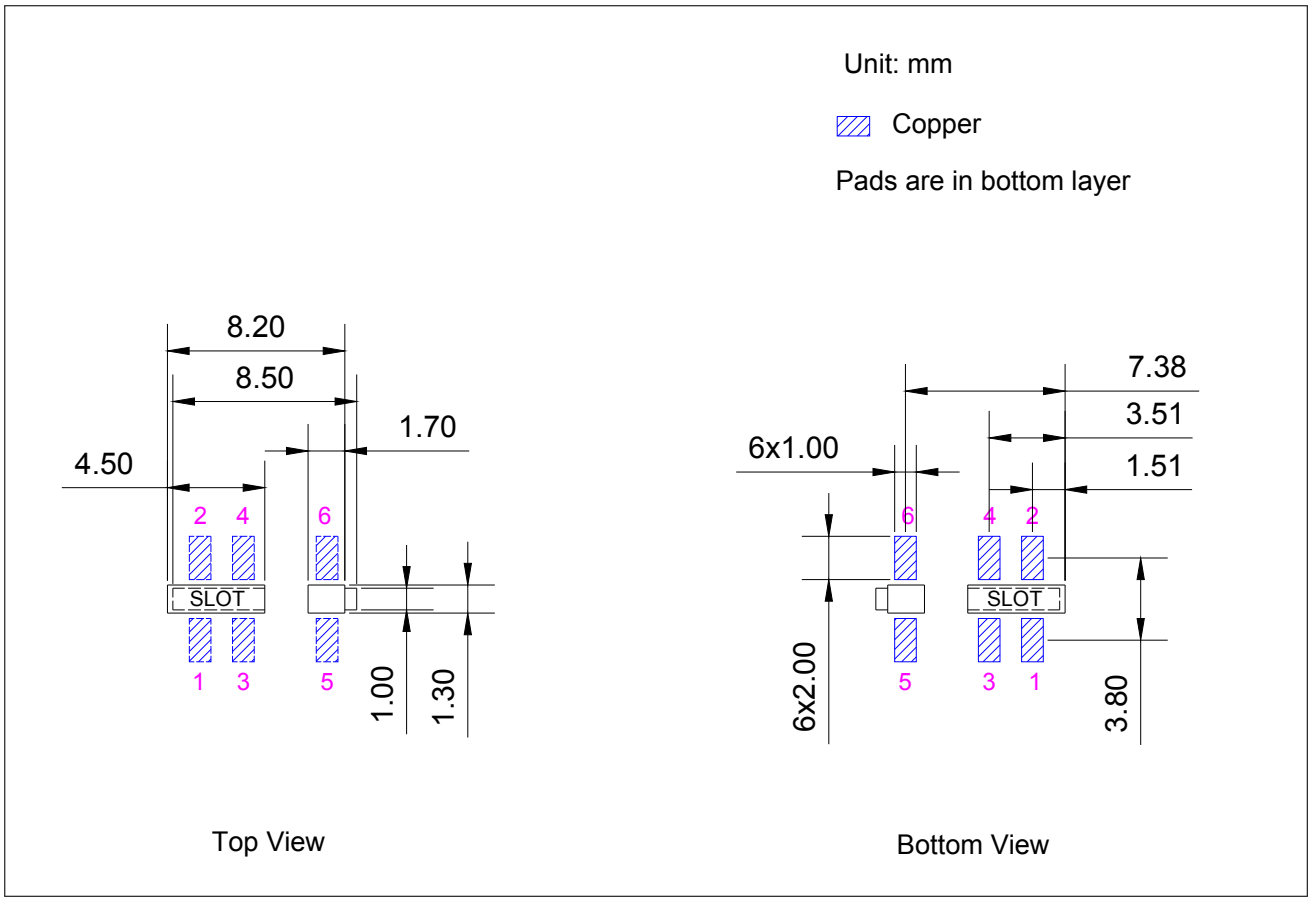

Figure 7: Recommended PCB Land Pattern

8 Product Handling

8.1 Storage Conditions

The products sealed in moisture barrier bags (MBB) should be stored in a non-condensing atmospheric environment of < 40 °C and 90%RH. The module is rated at the moisture sensitivity level (MSL) of 3.

After unpacking, the module must be soldered within 168 hours with the factory conditions 25±5 °C and 60%RH. If the above conditions are not met, the module needs to be baked.

8.2 Electrostatic Discharge (ESD)

- Human body model (HBM): ±2000 V
- Charged-device model (CDM): ±500 V

8.3 Wave Soldering Profile

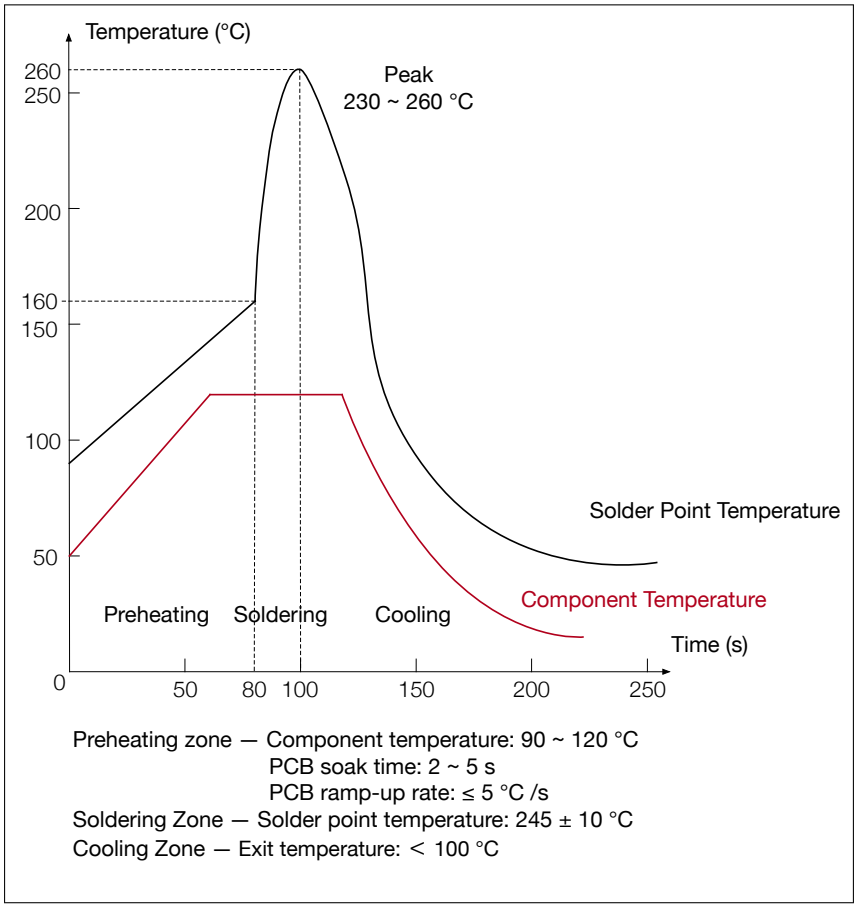

Figure 8: Wave Soldering Profile

8.4 Ultrasonic Vibration

Avoid exposing Espressif modules to vibration from ultrasonic equipment, such as ultrasonic welders or ultrasonic cleaners. This vibration may induce resonance in the in-module crystal and lead to its malfunction or even failure. As a consequence, **the module may stop working or its performance may deteriorate**.

9 Related Documentation and Resources

Related Documentation

- ESP8685 Series Datasheet – Specifications of the ESP8685 hardware.
- *Certificates*
  https://espressif.com/en/support/documents/certificates
- *Documentation Updates and Update Notification Subscription*
  https://espressif.com/en/support/download/documents

Developer Zone

- *ESP-IDF* and other development frameworks on GitHub.
  https://github.com/espressif
- *ESP32 BBS Forum* – Engineer-to-Engineer (E2E) Community for Espressif products where you can post questions, share knowledge, explore ideas, and help solve problems with fellow engineers.
  https://esp32.com/
- *The ESP Journal* – Best Practices, Articles, and Notes from Espressif folks.
  https://blog.espressif.com/
- See the tabs *SDKs and Demos*, *Apps*, *Tools*, *AT Firmware*.
  https://espressif.com/en/support/download/sdks-demos

Products

- *ESP8685 Series SoCs* – Browse through all ESP8685 SoCs.
  https://espressif.com/en/products/socs?id=ESP8685
- *ESP8685 Series Modules* – Browse through all ESP8685-based modules.
  https://espressif.com/en/products/modules?id=ESP8685
- *ESP8685 Series DevKits* – Browse through all ESP8685-based devkits.
  https://espressif.com/en/products/devkits?id=ESP8685
- *ESP Product Selector* – Find an Espressif hardware product suitable for your needs by comparing or applying filters.
  https://products.espressif.com/#/product-selector?language=en

Contact Us

- See the tabs *Sales Questions*, *Technical Enquiries*, *Circuit Schematic & PCB Design Review*, *Get Samples* (Online stores), *Become Our Supplier*, *Comments & Suggestions*.
  https://espressif.com/en/contact-us/sales-questions

Revision History

Date	Version	Release notes
2022-08-26	v0.5	Preliminary release
2022-05-06	v0.1	Draft

Antenna trace statement:

The characteristics impedance depends on the dielectric of PCB, the track width and the ground plane spacing. The detail simulation as below:

Figure 1: Grand referring to layer 2 Base copper, 12.6 mil

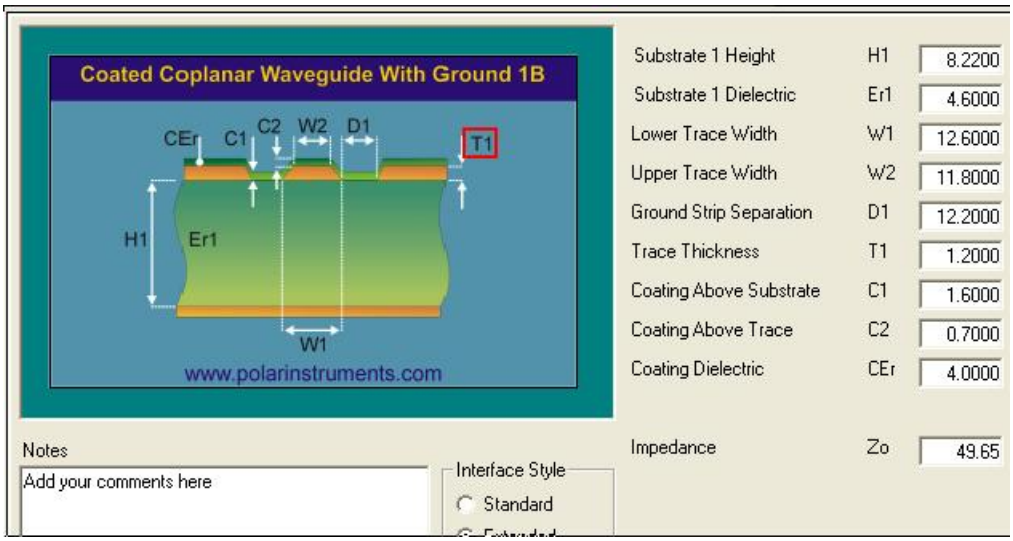

Figure 2: Grand referring to layer 4 Finished Copper, 39.37 mil

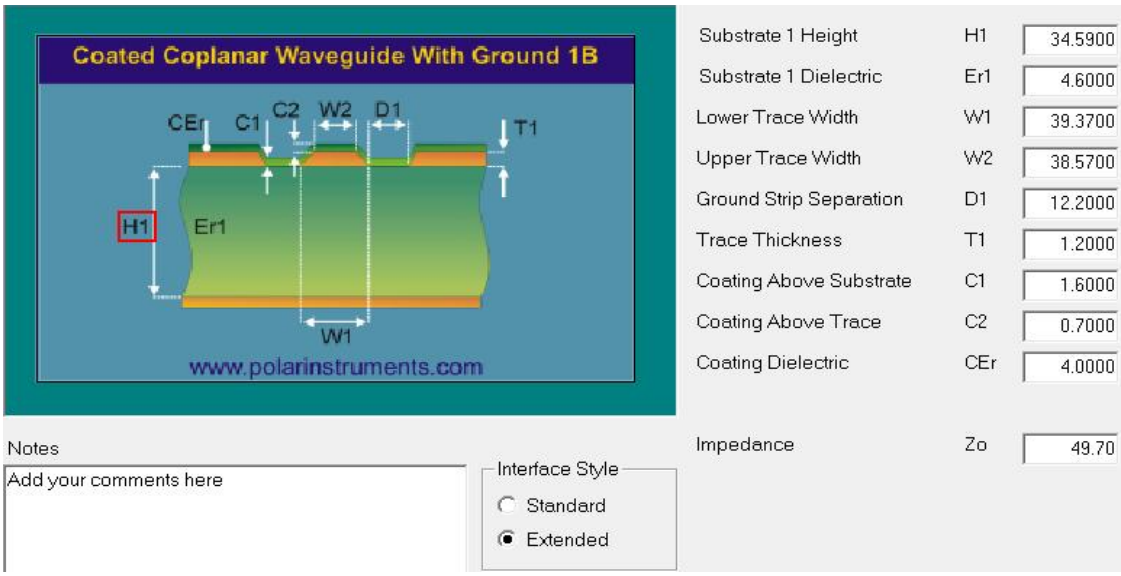

Figure 3:

There is 50ohm impedance control for RF trace that highlights in the image below. Refer to the Gerber file for the size.

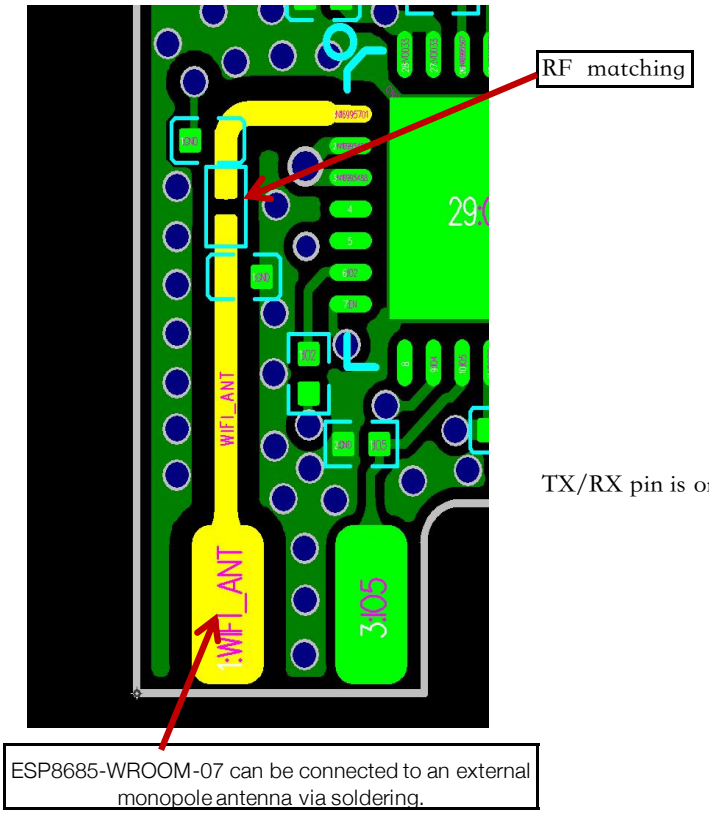

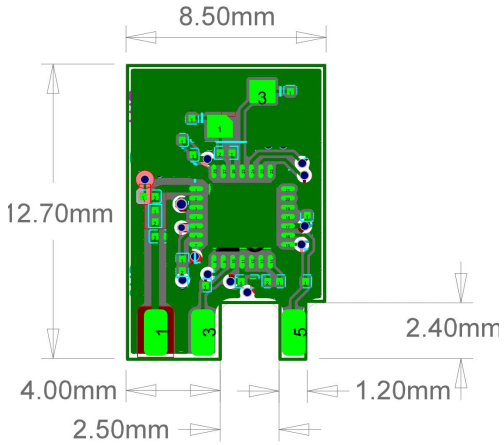

TX/RX pin is on the backside:

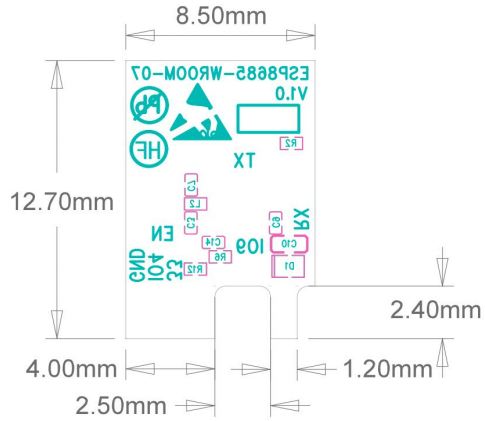

You can find more for design docs as below link:

https://www.espressif.com/en/support/documents/technical-documents?keys=

www.espressif.com

Disclaimer and Copyright Notice

Information in this document, including URL references, is subject to change without notice.

ALL THIRD PARTY'S INFORMATION IN THIS DOCUMENT IS PROVIDED AS IS WITH NO WARRANTIES TO ITS AUTHENTICITY AND ACCURACY.

NO WARRANTY IS PROVIDED TO THIS DOCUMENT FOR ITS MERCHANTABILITY, NON-INFRINGEMENT, FITNESS FOR ANY PARTICULAR PURPOSE, NOR DOES ANY WARRANTY OTHERWISE ARISING OUT OF ANY PROPOSAL, SPECIFICATION OR SAMPLE.

All liability, including liability for infringement of any proprietary rights, relating to use of information in this document is disclaimed. No licenses express or implied, by estoppel or otherwise, to any intellectual property rights are granted herein.

The Wi-Fi Alliance Member logo is a trademark of the Wi-Fi Alliance. The Bluetooth logo is a registered trademark of Bluetooth SIG.

All trade names, trademarks and registered trademarks mentioned in this document are property of their respective owners, and are hereby acknowledged.

Copyright © 2022 Espressif Systems (Shanghai) Co., Ltd. All rights reserved.