ESP32-H2-MINI-1
ESP32-H2-MINI-1U

Datasheet

Bluetooth® Low Energy and IEEE 802.15.4 module
Built around ESP32-H2 series of SoCs, RISC-V single-core 32-bit microprocessor
2 MB or 4 MB flash in chip package
19 GPIOs
On-board PCB antenna or external antenna connector

ESP32-H2-MINI-1

ESP32-H2-MINI-1U

PRELIMINARY

Pre-release v0.6
Espressif Systems
Copyright © 2023

1 Module Overview

Note:

Check the link or the QR code to make sure that you use the latest version of this document:
https://espressif.com/documentation/esp32-h2-mini-1_mini-1u_datasheet_en.pdf

1.1 Features

CPU and On-Chip Memory

- ESP32-H2 embedded, RISC-V single-core 32-bit LX7 microprocessor, up to 96 MHz

  ~~CPU information to be updated~~

- 128 KB ROM
- 320 KB SRAM
- 4 KB LP Memory
- 2 MB or 4 MB in-package flash

Bluetooth

- Bluetooth Low Energy (Bluetooth 5.3 certified)
- Bluetooth mesh
- Bluetooth Low Energy long range (Coded PHY, 125 Kbps and 500 Kbps)
- Bluetooth Low Energy high speed (2 Mbps)
- Bluetooth Low Energy advertising extensions and multiple advertising sets
- Simultaneous Broadcaster, Observer, Peripheral and Central
- Multiple connections
- LE power control

IEEE 802.15.4

- IEEE Standard 802.15.4-2015 compliant
- Supports 250 Kbps data rate in 2.4 GHz band and OQPSK PHY
- Supports Thread 1.3
- Supports Zigbee 3.0
- Supports Matter
- Supports other application-layer protocols (HomeKit, MQTT, etc)

Peripherals

- GPIO, I2C, I2S, SPI, UART, ADC, LED PWM, ETM, GDMA, PCNT, PARLIO, RMT, TWAI®, MCPWM, USB Serial/JTAG, temperature sensor, general-purpose timers, system timer, watchdog timer

Note:
* Please refer to *ESP32-H2 Series Datasheet* for detailed information about the module peripherals.

~~Add trademark to TWAI?~~

Integrated Components on Module

- 32 MHz crystal oscillator

Antenna Options

- On-board PCB antenna (ESP32-H2-MINI-1)
- External antenna via a connector (ESP32-H2-MINI-1U)

Operating Conditions

- Operating voltage/Power supply: 3.0 ~ 3.6 V
- Operating ambient temperature:
  - 85 °C version: –40 ~ 85 °C
  - 105 °C version: –40 ~ 105 °C

PRELIMINARY

1.2 Description

ESP32-H2-MINI-1 and ESP32-H2-MINI-1U are two powerful, generic Bluetooth® Low Energy and IEEE 802.15.4 combo module that has a rich set of peripherals. This module is an ideal choice for a wide variety of application scenarios related to Internet of Things (IoT), such as embedded systems, smart home, wearable electronics, etc.

ESP32-H2-MINI-1 comes with a PCB antenna. ESP32-H2-MINI-1U comes with a connector for an external antenna. They both feature a 2 or 4 MB external SPI flash.

Both ESP32-H2-MINI-1 and ESP32-H2-MINI-1U come in three versions:

- 2 MB flash (105°C)
- 4 MB flash (105°C)
- 4 MB flash (85°C)

These three versions only vary in flash part number and ambient temperature. In this datasheet unless otherwise stated, ESP32-H2-MINI-1 refers to the ESP32-H2-MINI-1 module in 2 MB (105°C), 4 MB (105°C), and 4 MB (85°C) versions, and ESP32-H2-MINI-1U refers to the ESP32-H2-MINI-1U module in 2 MB (105°C), 4 MB (105°C), and 4 MB (85°C) versions.

The series comparison for these two modules are as follows:

Table 1: ESP32-H2-MINI Series Comparison

Ordering Code	In-package Flash[1]	Ambient Temp.[2] (°C)	Size[3] (mm)
ESP32-H2-MINI-1-H2	2 (Quad SPI)	–40 ~105	13.2 × 16.6 × 2.4
ESP32-H2-MINI-1-H4	4 (Quad SPI)	–40 ~105	
ESP32-H2-MINI-1-N4	4 (Quad SPI)	–40 ~85	
ESP32-H2-MINI-1U-H2	2 (Quad SPI)	–40 ~105	13.2 × 12.5 × 2.4
ESP32-H2-MINI-1U-H4	4 (Quad SPI)	–40 ~105	
ESP32-H2-MINI-1U-N4	4 (Quad SPI)	–40 ~85	

[1] The flash is integrated in the chip's package.

[2] Ambient temperature specifies the recommended temperature range of the environment immediately outside the Espressif module.

[3] For details, refer to Section 8.1 *Physical Dimensions*.

Please note that this table is not updated to template v0.8 yet. May update later.

At the core of this module is ESP32-H2, a 32-bit RISC-V single-core CPU that operates at up to 96 MHz. You can power off the CPU and make use of the low-power coprocessor to constantly monitor the peripherals for changes or crossing of thresholds.

ESP32-H2 integrates a rich set of peripherals including I2C, I2S, SPI, UART, ADC, LED PWM, ETM, GDMA, PCNT, PARLIO, RMT, TWAI, MCPWM, USB Serial/JTAG, temperature sensor, general-purpose timers, system timer, watchdog timer as well as up to 19 GPIOs.

PRELIMINARY

Note:
* For more information on ESP32-H2, please refer to *ESP32-H2 Series Datasheet*.

1.3 Applications

- Smart Home
- Industrial Automation
- Health Care
- Consumer Electronics
- Smart Agriculture
- Retail and Catering
- Generic Low-power IoT Sensor Hubs
- Generic Low-power IoT Data Loggers

PRELIMINARY

Contents

1 Module Overview 2
1.1 Features 2
1.2 Description 3
1.3 Applications 4
2 Block Diagram 9
3 Pin Definitions 10
3.1 Pin Layout 10
3.2 Pin Description 10
3.3 Strapping Pins 11
3.3.1 Chip Boot Mode Control 12
3.3.2 ROM Messages Printing Control 13
3.3.3 JTAG Signal Source Control 13
4 Electrical Characteristics 15
4.1 Absolute Maximum Ratings 15
4.2 Recommended Operating Conditions 15
4.3 DC Characteristics (3.3 V, 25 °C) 15
4.4 Current Consumption Characteristics 16
4.4.1 Current Consumption in Active Mode 16
4.4.2 Current Consumption in Other Modes 17
5 RF Characteristics 18
5.1 Bluetooth 5 (LE) Radio 18
5.1.1 Bluetooth LE RF Transmitter (TX) Characteristics 18
5.1.2 Bluetooth LE RF Receiver (RX) Characteristics 20
5.2 802.15.4 Radio 22
5.2.1 802.15.4 RF Transmitter (TX) Characteristics 22
5.2.2 802.15.4 RF Receiver (RX) Characteristics 22
6 Module Schematics 23
7 Peripheral Schematics 25
8 Physical Dimensions and PCB Land Pattern 26
8.1 Physical Dimensions 26
8.2 Recommended PCB Land Pattern 27
8.3 Dimensions of External Antenna Connector 29
9 Product Handling 30
9.1 Storage Conditions 30
9.2 Electrostatic Discharge (ESD) 30

PRELIMINARY

9.3 Soldering Profile 30
9.3.1 Reflow Profile 30
9.4 Ultrasonic Vibration 31
10 Related Documentation and Resources 32
Revision History 33

PRELIMINARY

List of Tables

1 ESP32-H2-MINI Series Comparison 3
2 Pin Definitions 10
3 Default Configuration of Strapping Pins 12
4 Boot Mode Control 12
5 ROM Message Printing Control 13
6 JTAG Signal Source Control 14
7 Parameter Descriptions of the Setup and Hold Time for the Strapping Pin 14
8 Absolute Maximum Ratings 15
9 Recommended Operating Conditions 15
10 DC Characteristics (3.3 V, 25 °C) 15
11 Current Consumption for Bluetooth LE in Active Mode 16
12 Current Consumption for 802.15.4 in Active Mode 16
13 Current Consumption in Modem-sleep Mode 17
14 Current Consumption in Low-Power Modes 17
15 Bluetooth LE RF Characteristics 18
16 Bluetooth LE - Transmitter Characteristics - 1 Mbps 18
17 Bluetooth LE - Transmitter Characteristics - 2 Mbps 18
18 Bluetooth LE - Transmitter Characteristics - 125 Kbps 19
19 Bluetooth LE - Transmitter Characteristics - 500 Kbps 19
20 Bluetooth LE - Receiver Characteristics - 1 Mbps 20
21 Bluetooth LE - Receiver Characteristics - 2 Mbps 20
22 Bluetooth LE - Receiver Characteristics - 125 Kbps 21
23 Bluetooth LE - Receiver Characteristics - 500 Kbps 21
24 802.15.4 RF Characteristics 22
25 802.15.4 Transmitter Characteristics - 250 Kbps 22
26 802.15.4 Receiver Characteristics - 250 Kbps 22

PRELIMINARY

List of Figures

1 ESP32-H2-MINI-1 Block Diagram 9
2 ESP32-H2-MINI-1U Block Diagram 9
3 Pin Layout (Top View) 10
4 Setup and Hold Times for the Strapping Pin 14
5 ESP32-H2-MINI-1 Schematics 23
6 ESP32-H2-MINI-1U Schematics 24
7 Peripheral Schematics 25
8 ESP32-H2-MINI-1 Physical Dimensions 26
9 ESP32-H2-MINI-1U Physical Dimensions 26
10 ESP32-H2-MINI-1 Recommended PCB Land Pattern 27
11 ESP32-H2-MINI-1U Recommended PCB Land Pattern 28
12 Dimensions of External Antenna Connector 29
13 Reflow Profile 30

PRELIMINARY

2 Block Diagram

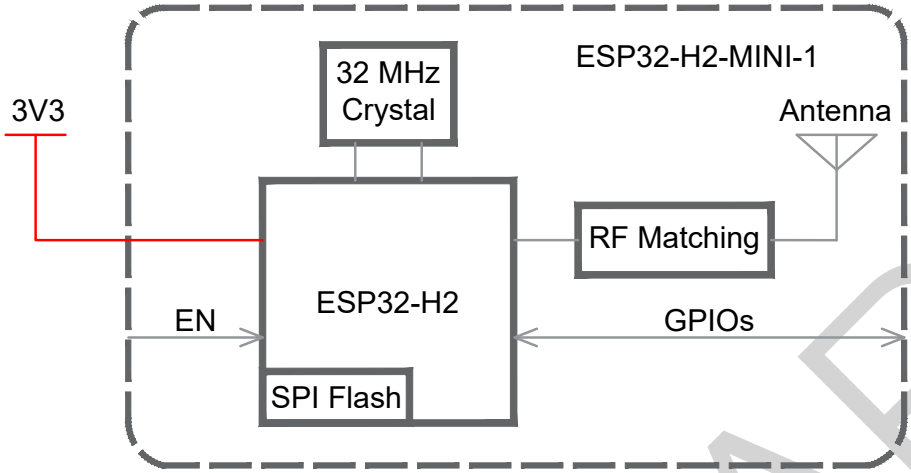

Figure 1: ESP32-H2-MINI-1 Block Diagram

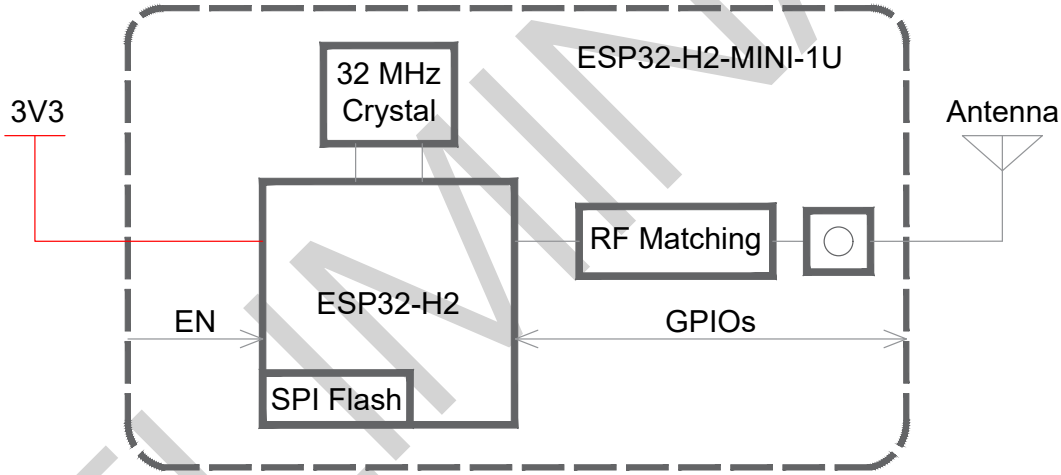

Figure 2: ESP32-H2-MINI-1U Block Diagram

PRELIMINARY

3 Pin Definitions

3.1 Pin Layout

The pin diagram below shows the approximate location of pins on the module. For the actual diagram drawn to scale, please refer to Figure 8.1 *Physical Dimensions*.

The pin diagram is applicable for ESP32-H2-MINI-1 and ESP32-H2-MINI-1U, but the latter has no keepout zone.

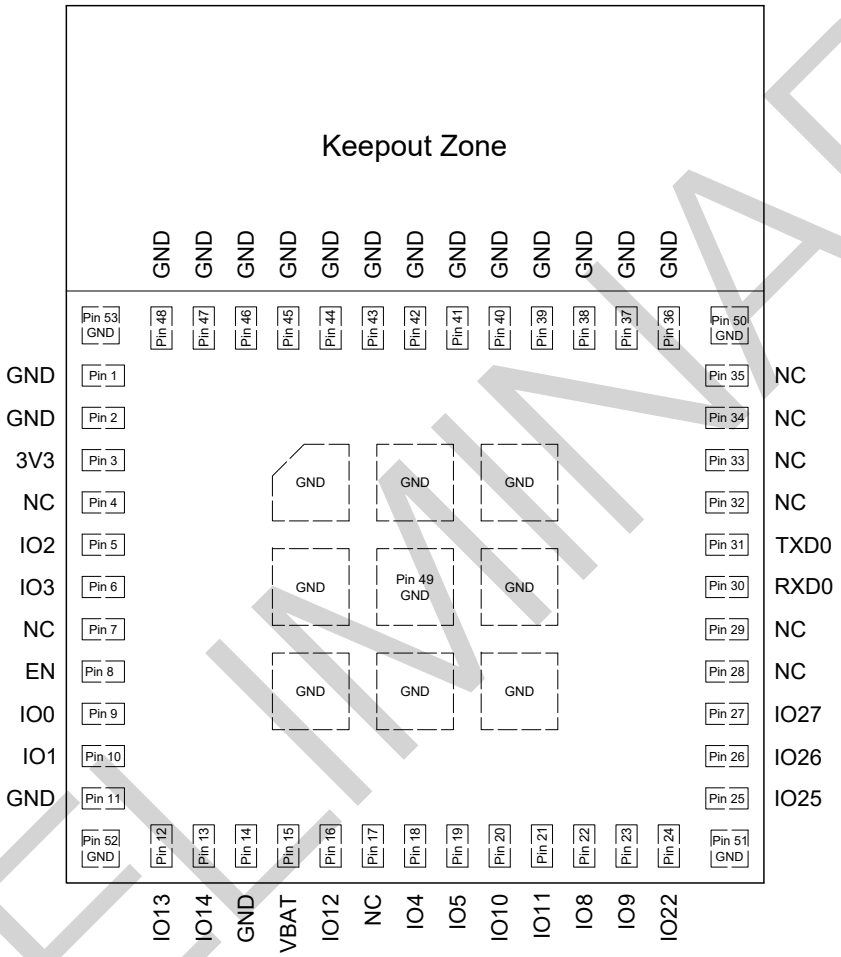

Figure 3: Pin Layout (Top View)

3.2 Pin Description

The module has 53 pins. See pin definitions in Table 2 *Pin Definitions*.

For peripheral pin configurations, please refer to *ESP32-H2 Series Datasheet*.

Table 2: Pin Definitions

Name	No.	Type[1]	Function
GND	1, 2, 11, 14, 36~53	P	Ground
3V3	3	P	Power supply

Cont'd on next page

PRELIMINARY

Table 2 – cont'd from previous page

Name	No.	Type[1]	Function
NC	4, 7, 17, 28, 29, 32~35	—	NC
IO2	5	I/O/T	GPIO2, FSPIWP, ADC1_CH1, **MTMS**
IO3	6	I/O/T	GPIO3, FSPIHD, ADC1_CH2, **MTDO**
EN	8	I	High: on, enables the chip. Low: off, the chip powers off. Note: Do not leave the EN pin floating.
IO0	9	I/O/T	**GPIO0**, FSPIQ
IO1	10	I/O/T	**GPIO1**, FSPICS0, ADC1_CH0
GND	11	P	Ground
IO13	12	I/O/T	**GPIO13**, XTAL_32K_P
IO14	13	I/O/T	**GPIO14**, XTAL_32K_N
GND	14	P	Ground
VBAT	15	P	Connected to internal 3V3 power supply (Default) or external battery power supply (3.0 ~ 3.6 V).
IO12	16	I/O/T	**GPIO12**
IO4	18	I/O/T	GPIO4, FSPICLK, ADC1_CH3, **MTCK**
IO5	19	I/O/T	GPIO5, FSPID, ADC1_CH4, **MTDI**
IO10	20	I/O/T	**GPIO10**, ZCD0
IO11	21	I/O/T	**GPIO11**, ZCD1
IO8	22	I/O/T	**GPIO8**
IO9	23	I/O/T	**GPIO9**
IO22	24	I/O/T	**GPIO22**
IO25	25	I/O/T	**GPIO25**, FSPICS3
IO26	26	I/O/T	GPIO26, FSPICS4, **USB_D-**
IO27	27	I/O/T	GPIO27, FSPICS5, **USB_D+**
RXD0	30	I/O/T	GPIO23, FSPICS1, **U0RXD**
TXD0	31	I/O/T	GPIO24, FSPICS2, **U0TXD**

[1] P: power supply; I: input; O: output; T: high impedance.

Note:
The content below is excerpted from *ESP32-H2 Series Datasheet* > Section *Strapping Pins*. For the strapping pin mapping between the chip and modules, please refer to Chapter 6 *Module Schematics*.

3.3 Strapping Pins

At each startup or reset, a chip requires some initial configuration parameters, such as in which boot mode to load the chip, etc. These parameters are passed over via the strapping pins. After reset, the strapping pins work as normal function pins.

ESP32-H2 has the following parameters controlled by the given strapping pins at chip reset:

- **Chip boot mode** – GPIO8 and GPIO9

PRELIMINARY

- **ROM message printing** – GPIO8
- **JTAG signal source** – GPIO25

GPIO9 is connected to the chip's internal weak pull-up resistor at chip reset. This resistor determines the default bit value of GPIO9. Also, the resistor determines the bit value if GPIO9 is connected to an external high-impedance circuit.

Table 3: Default Configuration of Strapping Pins

Strapping Pin	Default Config	Bit Value
GPIO8	Floating	–
GPIO9	Pull-up	1
GPIO25	Floating	–

To change the bit values, the strapping pins should be connected to external pull-down/pull-up resistances. If the ESP32-H2 is used as a device by a host MCU, the strapping pin voltage levels can also be controlled by the host MCU.

All strapping pins have latches. At system reset, the latches sample the bit values of their respective strapping pins and store them until the chip is powered down or shut down. The states of latches cannot be changed in any other way. It makes the strapping pin values available during the entire chip operation, and the pins are freed up to be used as regular IOs after reset.

3.3.1 Chip Boot Mode Control

After the reset is released, the combination of GPIO8 and GPIO9 controls the boot mode. See Table 4 Boot Mode Control.

Table 4: Boot Mode Control

Boot Mode	GPIO8	GPIO9
Default Config	– (Floating)	1 (Pull-up)
SPI Boot	Any value	1
Joint Download Boot[1]	1	0

[1] Joint Download Boot mode supports the following download methods:
- USB-Serial-JTAG Download Boot
- UART Download Boot

In SPI Boot mode, the ROM bootloader loads and executes the program from SPI flash to boot the system.

In Joint Download Boot mode, users can download binary files into flash using UART0 or USB interface. It is also possible to download binary files into SRAM and execute it from SRAM.

In addition to SPI Boot and Joint Download Boot modes, ESP32-H2 also supports SPI Download Boot mode. For details, please see ESP32-H2 Technical Reference Manual > Chip Boot Control.

PRELIMINARY

3.3.2 ROM Messages Printing Control

During the ROM boot stage of SPI Boot mode, GPIO8, LP_AON_STORE4_REG[0] and EFUSE_UART_PRINT_CONTROL jointly control the printing of ROM messages.

Table 5: ROM Message Printing Control

Register[1]	eFuse[2]	GPIO8	ROM Message Printing
0	0 (0b00)	x[3]	ROM messages are always printed to UART0 during boot
	1 (0b01)	0	Print is enabled during boot
		1	Print is disabled during boot
	2 (0b10)	0	Print is disabled during boot
		1	Print is enabled during boot
	3 (0b11)	x	Print is disabled during boot
1	x	x	Print is disabled during boot

[1] Register: LP_AON_STORE4_REG[0]

[2] eFuse: EFUSE_UART_PRINT_CONTROL

[3] x: x indicates that the value has no effect on the result and can be ignored.

ROM message is printed to UART0 and USB Serial/JTAG Controller by default during power-on. Users can disable the printing to USB Serial/JTAG Controller by setting the eFuse bit EFUSE_DIS_USB_SERIAL_JTAG_ROM_PRINT.

Note that if EFUSE_DIS_USB_SERIAL_JTAG_ROM_PRINT is set to 0 to print to USB, but the USB Serial/JTAG Controller has been disabled, then ROM messages will not be printed to USB Serial/JTAG Controller.

Detailed description about the above-mentioned registers can be found in *ESP32-H2 Technical Reference Manual*

3.3.3 JTAG Signal Source Control

The strapping pin GPIO25 can be used to control the source of JTAG signals during the early boot process. This pin does not have any internal pull resistors and the strapping value must be controlled by the external circuit that cannot be in a high impedance state.

As Table 6 shows, GPIO25 is used in combination with EFUSE_DIS_PAD_JTAG, EFUSE_DIS_USB_JTAG, and EFUSE_JTAG_SEL_ENABLE.

PRELIMINARY

Table 6: JTAG Signal Source Control

eFuse 1[a]	eFuse 2[b]	eFuse 3[c]	GPIO25	JTAG Signal Source
0	0	0	Ignored	USB Serial/JTAG Controller
		1	0	JTAG pins MTDI, MTCK, MTMS, and MTDO
			1	USB Serial/JTAG Controller
0	1	Ignored	Ignored	JTAG pins MTDI, MTCK, MTMS, and MTDO
1	0	Ignored	Ignored	USB Serial/JTAG Controller
1	1	Ignored	Ignored	JTAG is disabled

[a] eFuse 1: EFUSE_DIS_PAD_JTAG
[b] eFuse 2: EFUSE_DIS_USB_JTAG
[c] eFuse 3: EFUSE_JTAG_SEL_ENABLE

Detailed description about the above-mentioned registers can be found in *ESP32-H2 Technical Reference Manual*

Figure 4 shows the setup and hold time for the strapping pin before and after the CHIP_EN signal goes high. Details about the parameters are listed in Table 7.

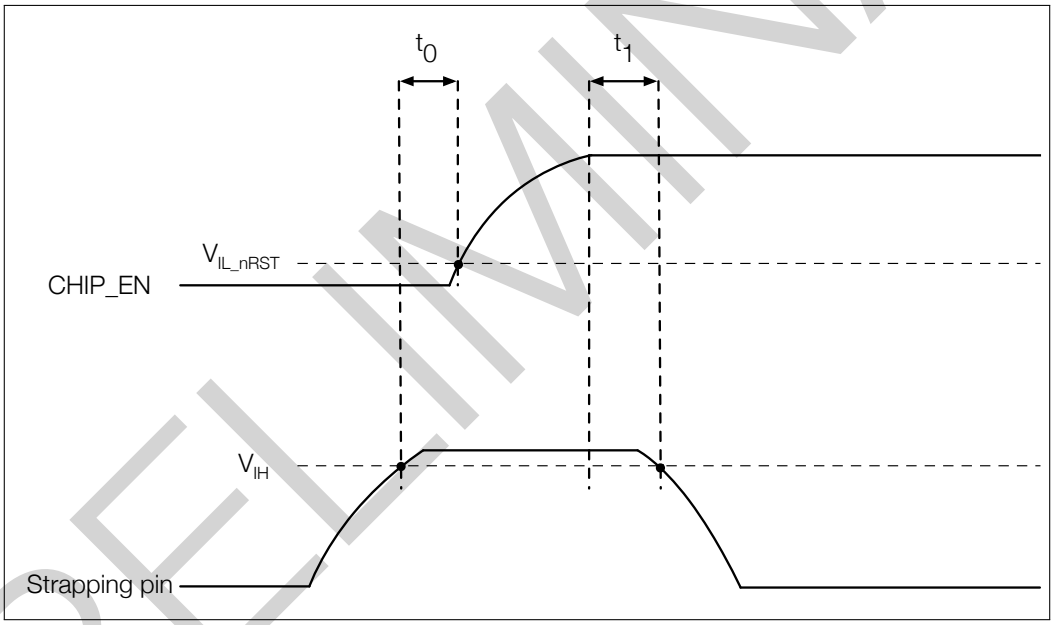

Figure 4: Setup and Hold Times for the Strapping Pin

Table 7: Parameter Descriptions of the Setup and Hold Time for the Strapping Pin

Parameter	Description	Min (ms)
t_0	Setup time before CHIP_EN goes from low to high	0
t_1	Hold time after CHIP_EN goes high	3

PRELIMINARY

4 Electrical Characteristics

4.1 Absolute Maximum Ratings

Stresses above those listed in Table 8 *Absolute Maximum Ratings* may cause permanent damage to the device. These are stress ratings only and functional operation of the device at these or any other conditions beyond those indicated under Table 9 *Recommended Operating Conditions* is not implied. Exposure to absolute-maximum-rated conditions for extended periods may affect device reliability.

Table 8: Absolute Maximum Ratings

Symbol	Parameter	Min	Max	Unit
VDD33	Power supply voltage	–0.3	3.6	V
T_{STORE}	Storage temperature	–40	105	°C

4.2 Recommended Operating Conditions

Table 9: Recommended Operating Conditions

Symbol	Parameter		Min	Typ	Max	Unit
VDD33	Power supply voltage		3.0	3.3	3.6	V
I_{VDD}	Current delivered by external power supply		0.35	—	—	A
T_A	Operating ambient temperature	105 °C version	–40	—	105	°C

4.3 DC Characteristics (3.3 V, 25 °C)

Table 10: DC Characteristics (3.3 V, 25 °C)

Symbol	Parameter	Min	Typ	Max	Unit
C_{IN}	Pin capacitance	—	2	—	pF
V_{IH}	High-level input voltage	0.75 × VDD[1]	—	VDD[1]+ 0.3	V
V_{IL}	Low-level input voltage	–0.3	—	0.25 × VDD[1]	V
I_{IH}	High-level input current	—	—	50	nA
I_{IL}	Low-level input current	—	—	50	nA
V_{OH}[2]	High-level output voltage	0.8 × VDD[1]	—	—	V
V_{OL}[2]	Low-level output voltage	—	—	0.1 × VDD[1]	V
I_{OH}	High-level source current (VDD[1]= 3.3 V, V_{OH} >= 2.64 V, PAD_DRIVER = 3)	—	40	—	mA
I_{OL}	Low-level sink current (VDD[1]= 3.3 V, V_{OL} = 0.495 V, PAD_DRIVER = 3)	—	28	—	mA
R_{PU}	Pull-up resistor	—	45	—	kΩ
R_{PD}	Pull-down resistor	—	45	—	kΩ
V_{IH_nRST}	Chip reset release voltage	0.75 × VDD[1]	—	VDD[1]+ 0.3	V
V_{IL_nRST}	Chip reset voltage	–0.3	—	0.25 × VDD[1]	V

PRELIMINARY

[1] VDD is the I/O voltage for pins of a particular power domain.

[2] V_{OH} and V_{OL} are measured using high-impedance load.

4.4 Current Consumption Characteristics

4.4.1 Current Consumption in Active Mode

The current consumption measurements are taken with a 3.3 V supply at 25 °C ambient temperature.

TX current consumption is rated at a 100% duty cycle.

RX current consumption is rated when the peripherals are disabled and the CPU idle.

Table 11: Current Consumption for Bluetooth LE in Active Mode

Work Mode	RF Condition	Description	Peak (mA)
Active (RF working)	TX	Bluetooth LE @ 18.0 dBm	112
		Bluetooth LE @ 7.0 dBm	55
		Bluetooth LE @ –2.0 dBm	35
		Bluetooth LE @ –24.0 dBm	26
	RX	Bluetooth LE	25

Table 12: Current Consumption for 802.15.4 in Active Mode

Work Mode	RF Condition	Description	Peak (mA)
Active (RF working)	TX	802.15.4 @ 18.0 dBm	123
		802.15.4 @ 7.0 dBm	54
		802.15.4 @ –2.0 dBm	38
		802.15.4 @ –22.0 dBm	28
	RX	802.15.4	29

PRELIMINARY

Note:
The content below is excerpted from *Section Power Consumption in Other Modes* in *ESP32-H2 Series Datasheet*.

4.4.2 Current Consumption in Other Modes

Table 13: Current Consumption in Modem-sleep Mode

Mode	CPU Frequency (MHz)	Description	Typ (mA)	
			All Peripherals Clocks Disabled	All Peripherals Clocks Enabled[1]
Modem-sleep[2]	96	CPU is running	10	17
		CPU is idle	3	7
	64	CPU is running	8	13
		CPU is idle	5	9
	48	CPU is running	7	10
		CPU is idle	5	10
	32	CPU is running	4	8
		CPU is idle	6	13

[1] In practice, the current consumption might be different depending on which peripherals are enabled.

[2] In Modem-sleep mode, the consumption might be higher when accessing flash.

Table 14: Current Consumption in Low-Power Modes

Mode	Description	Typ (μA)
Light-sleep	CPU and wireless communication modules are powered down, peripheral clocks are disabled, and all GPIOs are high-impedance	75
	CPU, wireless communication modules and peripherals are powered down, and all GPIOs are high-impedance	32
Deep-sleep	LP timer and LP memory are powered on	5
Power off	CHIP_EN is set to low level, the chip is powered off	1

PRELIMINARY

5 RF Characteristics

This section contains tables with RF characteristics of the Espressif product.

The RF data is measured at the antenna port, where RF cable is connected, including the front-end loss. The external antennas used for the tests on the modules with external antenna connectors have an impedance of 50 Ω.

Devices should operate in the center frequency range allocated by regional regulatory authorities. The target center frequency range and the target transmit power are configurable by software. See ESP RF Test Tool and Test Guide for instructions.

Unless otherwise stated, the RF tests are conducted with a 3.3 V (±5%) supply at 25 ºC ambient temperature.

5.1 Bluetooth 5 (LE) Radio

Table 15: Bluetooth LE RF Characteristics

Name	Description
Center frequency range of operating channel	2402 ~ 2480 MHz
RF transmit power range	–25.5 ~ 18.5 dBm

5.1.1 Bluetooth LE RF Transmitter (TX) Characteristics

Table 16: Bluetooth LE - Transmitter Characteristics - 1 Mbps

Parameter	Description	Min	Typ	Max	Unit
Carrier frequency offset and drift	Max. $\lvert f_n \rvert_{n=0,\,1,\,2,\,3,\,\ldots k}$	—	2.3	—	kHz
	Max. $\lvert f_0 - f_n \rvert_{n=2,\,3,\,4,\,\ldots k}$	—	1.3	—	kHz
	Max. $\lvert f_n - f_{n-5} \rvert_{n=6,\,7,\,8,\,\ldots k}$	—	1.6	—	kHz
	$\lvert f_1 - f_0 \rvert$	—	0.5	—	kHz
Modulation characteristics	$\Delta\ F1_{\text{avg}}$	—	250.3	—	kHz
	Min. $\Delta\ F2_{\text{max}}$ (for at least 99.9% of all $\Delta\ F2_{\text{max}}$)	—	216.3	—	kHz
	$\Delta\ F2_{\text{avg}}/\Delta\ F1_{\text{avg}}$	—	0.91	—	—
In-band emissions	± 2 MHz offset	—	–30	—	dBm
	± 3 MHz offset	—	–34	—	dBm
	> ± 3 MHz offset	—	–36	—	dBm

Table 17: Bluetooth LE - Transmitter Characteristics - 2 Mbps

Parameter	Description	Min	Typ	Max	Unit
Carrier frequency offset and drift	Max. $\lvert f_n \rvert_{n=0,\,1,\,2,\,3,\,\ldots k}$	—	4.7	—	kHz
	Max. $\lvert f_0 - f_n \rvert_{n=2,\,3,\,4,\,\ldots k}$	—	1.4	—	kHz
	Max. $\lvert f_n - f_{n-5} \rvert_{n=6,\,7,\,8,\,\ldots k}$	—	1.4	—	kHz

Cont'd on next page

PRELIMINARY

Table 17 – cont'd from previous page

Parameter	Description	Min	Typ	Max	Unit
	$\lvert f_1 - f_0 \rvert$	—	0.6	—	kHz
Modulation characteristics	$\Delta\ F1_{avg}$	—	502.5	—	kHz
	Min. $\Delta\ F2_{max}$ (for at least 99.9% of all $\Delta\ F2_{max}$)	—	491.8	—	kHz
	$\Delta\ F2_{avg}/\Delta\ F1_{avg}$	—	0.90	—	—
In-band emissions	± 4 MHz offset	—	–32	—	dBm
	± 5 MHz offset	—	–33	—	dBm
	> ± 5 MHz offset	—	–36	—	dBm

Table 18: Bluetooth LE - Transmitter Characteristics - 125 Kbps

Parameter	Description	Min	Typ	Max	Unit
Carrier frequency offset and drift	Max. $\lvert f_n \rvert_{n=0,\ 1,\ 2,\ 3,\ \ldots k}$	—	1.5	—	kHz
	Max. $\lvert f_0 - f_n \rvert_{n=1,\ 2,\ 3,\ \ldots k}$	—	1.0	—	kHz
	$\lvert f_0 - f_3 \rvert$	—	1.4	—	kHz
	Max. $\lvert f_n - f_{n-3} \rvert_{n=7,\ 8,\ 9,\ \ldots k}$	—	1.2	—	kHz
Modulation characteristics	$\Delta\ F1_{avg}$	—	251.5	—	kHz
	Min. $\Delta\ F1_{max}$ (for at least 99.9% of all $\Delta\ F1_{max}$)	—	241.4	—	kHz
In-band emissions	± 2 MHz offset	—	–36	—	dBm
	± 3 MHz offset	—	–43	—	dBm
	> ± 3 MHz offset	—	–43	—	dBm

Table 19: Bluetooth LE - Transmitter Characteristics - 500 Kbps

Parameter	Description	Min	Typ	Max	Unit
Carrier frequency offset and drift	Max. $\lvert f_n \rvert_{n=0,\ 1,\ 2,\ 3,\ \ldots k}$	—	2.5	—	kHz
	Max. $\lvert f_0 - f_n \rvert_{n=1,\ 2,\ 3,\ \ldots k}$	—	0.8	—	kHz
	$\lvert f_0 - f_3 \rvert$	—	0.3	—	kHz
	Max. $\lvert f_n - f_{n-3} \rvert_{n=7,\ 8,\ 9,\ \ldots k}$	—	1.2	—	kHz
Modulation characteristics	$\Delta\ F2_{avg}$	—	231.7	—	kHz
	Min. $\Delta\ F2_{max}$ (for at least 99.9% of all $\Delta\ F2_{max}$)	—	220.0	—	kHz
In-band emissions	± 2 MHz offset	—	–30	—	dBm
	± 3 MHz offset	—	–34	—	dBm
	> ± 3 MHz offset	—	–37	—	dBm

Note that the In-band emissions in Table 16 and Table 19 above are tested at 15 dBm of TX power. However, the test result still meets the Bluetooth SIG standard even if the TX power is increased up to 20 dBm.

PRELIMINARY

5.1.2 Bluetooth LE RF Receiver (RX) Characteristics

Table 20: Bluetooth LE - Receiver Characteristics - 1 Mbps

Parameter		Description	Min	Typ	Max	Unit
Sensitivity @30.8% PER		—	—	–98.0	—	dBm
Maximum received signal @30.8% PER		—	—	8	—	dBm
C/I and receiver selectivity performance	Co-channel	F = F0 MHz	—	4	—	dB
	Adjacent channel	F = F0 + 1 MHz	—	2	—	dB
		F = F0 – 1 MHz	—	0	—	dB
		F = F0 + 2 MHz	—	–29	—	dB
		F = F0 – 2 MHz	—	–29	—	dB
		F = F0 + 3 MHz	—	–35	—	dB
		F = F0 – 3 MHz	—	–36	—	dB
		F ≥ F0 + 4 MHz	—	–30	—	dB
		F ≤ F0 – 4 MHz	—	–36	—	dB
	Image frequency	—	—	–30	—	dB
	Adjacent channel to image frequency	F = F_{image} + 1 MHz	—	–32	—	dB
		F = F_{image} – 1 MHz	—	–35	—	dB
Out-of-band blocking performance		30 MHz ~ 2000 MHz	—	–16	—	dBm
		2003 MHz ~ 2399 MHz	—	–12	—	dBm
		2484 MHz ~ 2997 MHz	—	–16	—	dBm
		3000 MHz ~ 12.75 GHz	—	0	—	dBm
Intermodulation		—	—	–35	—	dBm

Table 21: Bluetooth LE - Receiver Characteristics - 2 Mbps

Parameter		Description	Min	Typ	Max	Unit
Sensitivity @30.8% PER		—	—	–95.0	—	dBm
Maximum received signal @30.8% PER		—	—	8	—	dBm
C/I and receiver selectivity performance	Co-channel	F = F0 MHz	—	5	—	dB
	Adjacent channel	F = F0 + 2 MHz	—	1	—	dB
		F = F0 – 2 MHz	—	–2	—	dB
		F = F0 + 4 MHz	—	–27	—	dB
		F = F0 – 4 MHz	—	–32	—	dB
		F = F0 + 6 MHz	—	–33	—	dB
		F = F0 – 6 MHz	—	–36	—	dB
		F ≥ F0 + 8 MHz	—	–36	—	dB
		F ≤ F0 – 8 MHz	—	–36	—	dB
	Image frequency	—	—	–26	—	dB
	Adjacent channel to image frequency	F = F_{image} + 2 MHz	—	–33	—	dB
		F = F_{image} – 2 MHz	—	1	—	dB
Out-of-band blocking performance		30 MHz ~ 2000 MHz	—	–17	—	dBm
		2003 MHz ~ 2399 MHz	—	–27	—	dBm
		2484 MHz ~ 2997 MHz	—	–17	—	dBm

Cont'd on next page

PRELIMINARY

Table 21 – cont'd from previous page

Parameter	Description	Min	Typ	Max	Unit
	3000 MHz ~ 12.75 GHz	—	0	—	dBm
Intermodulation	—	—	–27	—	dBm

Table 22: Bluetooth LE - Receiver Characteristics - 125 Kbps

Parameter		Description	Min	Typ	Max	Unit
Sensitivity @30.8% PER		—	—	–105.5	—	dBm
Maximum received signal @30.8% PER		—	—	8	—	dBm
C/I and receiver selectivity performance	Co-channel	F = F0 MHz	—	0	—	dB
	Adjacent channel	F = F0 + 1 MHz	—	–4	—	dB
		F = F0 – 1 MHz	—	–6	—	dB
		F = F0 + 2 MHz	—	–31	—	dB
		F = F0 – 2 MHz	—	–34	—	dB
		F = F0 + 3 MHz	—	–39	—	dB
		F = F0 – 3 MHz	—	–48	—	dB
		F ≥ F0 + 4 MHz	—	–35	—	dB
		F ≤ F0 – 4 MHz	—	–48	—	dB
	Image frequency	—	—	–39	—	dB
	Adjacent channel to image frequency	F = F_{image} + 1 MHz	—	–38	—	dB
		F = F_{image} – 1 MHz	—	–39	—	dB

Table 23: Bluetooth LE - Receiver Characteristics - 500 Kbps

Parameter		Description	Min	Typ	Max	Unit
Sensitivity @30.8% PER		—	—	–101.5	—	dBm
Maximum received signal @30.8% PER		—	—	8	—	dBm
C/I and receiver selectivity performance	Co-channel	F = F0 MHz	—	2	—	dB
	Adjacent channel	F = F0 + 1 MHz	—	–1	—	dB
		F = F0 – 1 MHz	—	–4	—	dB
		F = F0 + 2 MHz	—	–28	—	dB
		F = F0 – 2 MHz	—	–29	—	dB
		F = F0 + 3 MHz	—	–38	—	dB
		F = F0 – 3 MHz	—	–41	—	dB
		F ≥ F0 + 4 MHz	—	–33	—	dB
		F ≤ F0 – 4 MHz	—	–41	—	dB
	Image frequency	—	—	–33	—	dB
	Adjacent channel to image frequency	F = F_{image} + 1 MHz	—	–36	—	dB
		F = F_{image} – 1 MHz	—	–38	—	dB

PRELIMINARY

5.2 802.15.4 Radio

Table 24: 802.15.4 RF Characteristics

Name	Description
Center frequency range of operating channel	2405 ~ 2480 MHz

[1] Zigbee in the 2.4 GHz range supports 16 channels at 5 MHz spacing from channel 11 to channel 26.

5.2.1 802.15.4 RF Transmitter (TX) Characteristics

Table 25: 802.15.4 Transmitter Characteristics - 250 Kbps

Parameter	Min	Typ	Max	Unit
RF transmit power range	–25.5	—	18.5	dBm
EVM	—	3.8%	—	—

5.2.2 802.15.4 RF Receiver (RX) Characteristics

Table 26: 802.15.4 Receiver Characteristics - 250 Kbps

Parameter		Description	Min	Typ	Max	Unit
Sensitivity @1% PER		—	—	–101.5	—	dBm
Maximum received signal @1% PER		—	—	8	—	dBm
Relative jamming level	Adjacent channel	F = F0 + 5 MHz	—	31	—	dB
		F = F0 – 5 MHz	—	43	—	dB
	Alternate channel	F = F0 + 10 MHz	—	49	—	dB
		F = F0 – 10 MHz	—	54	—	dB

PRELIMINARY

6 Module Schematics

This is the reference design of the module.

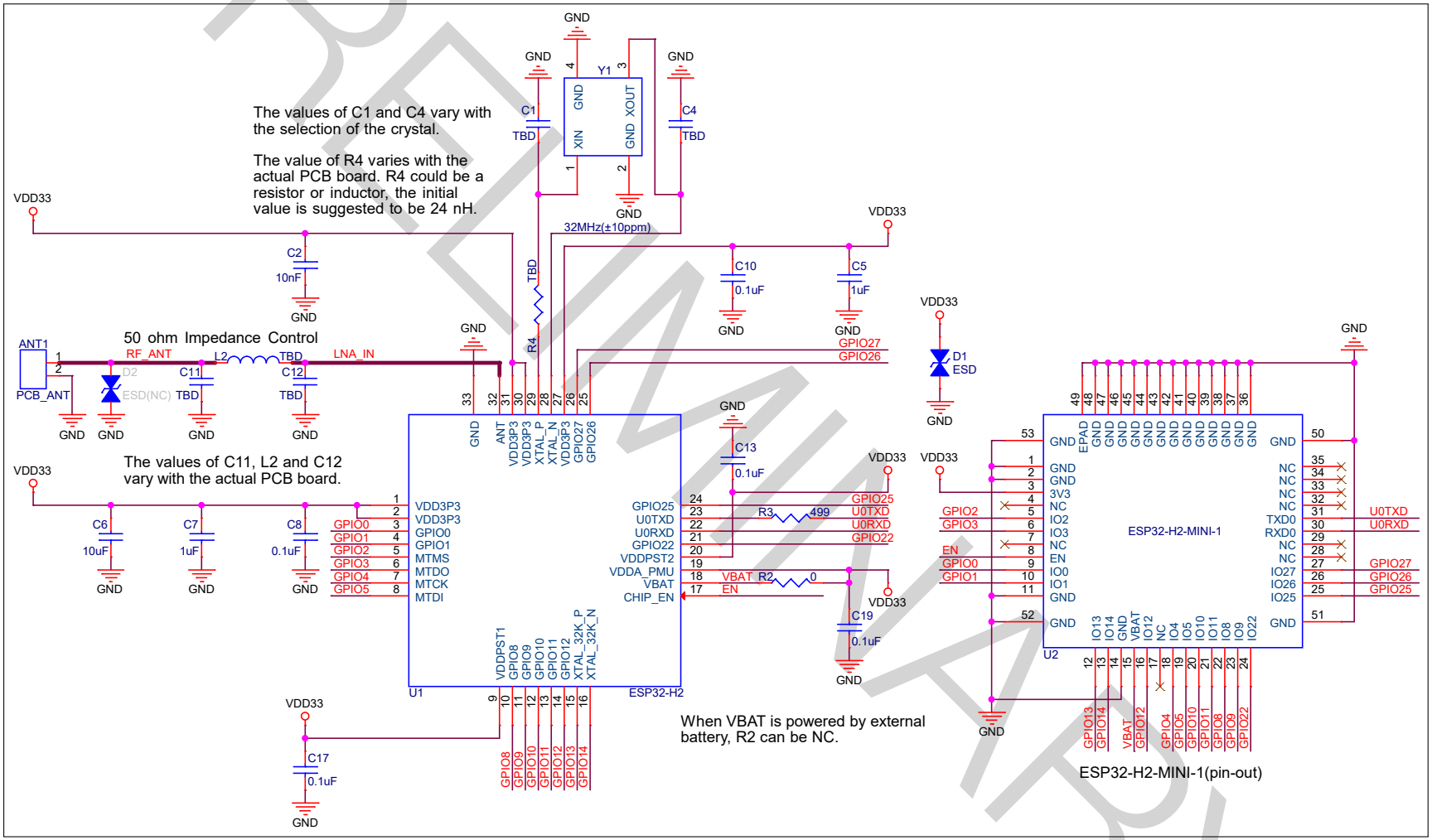

Figure 5: ESP32-H2-MINI-1 Schematics

PRELIMINARY

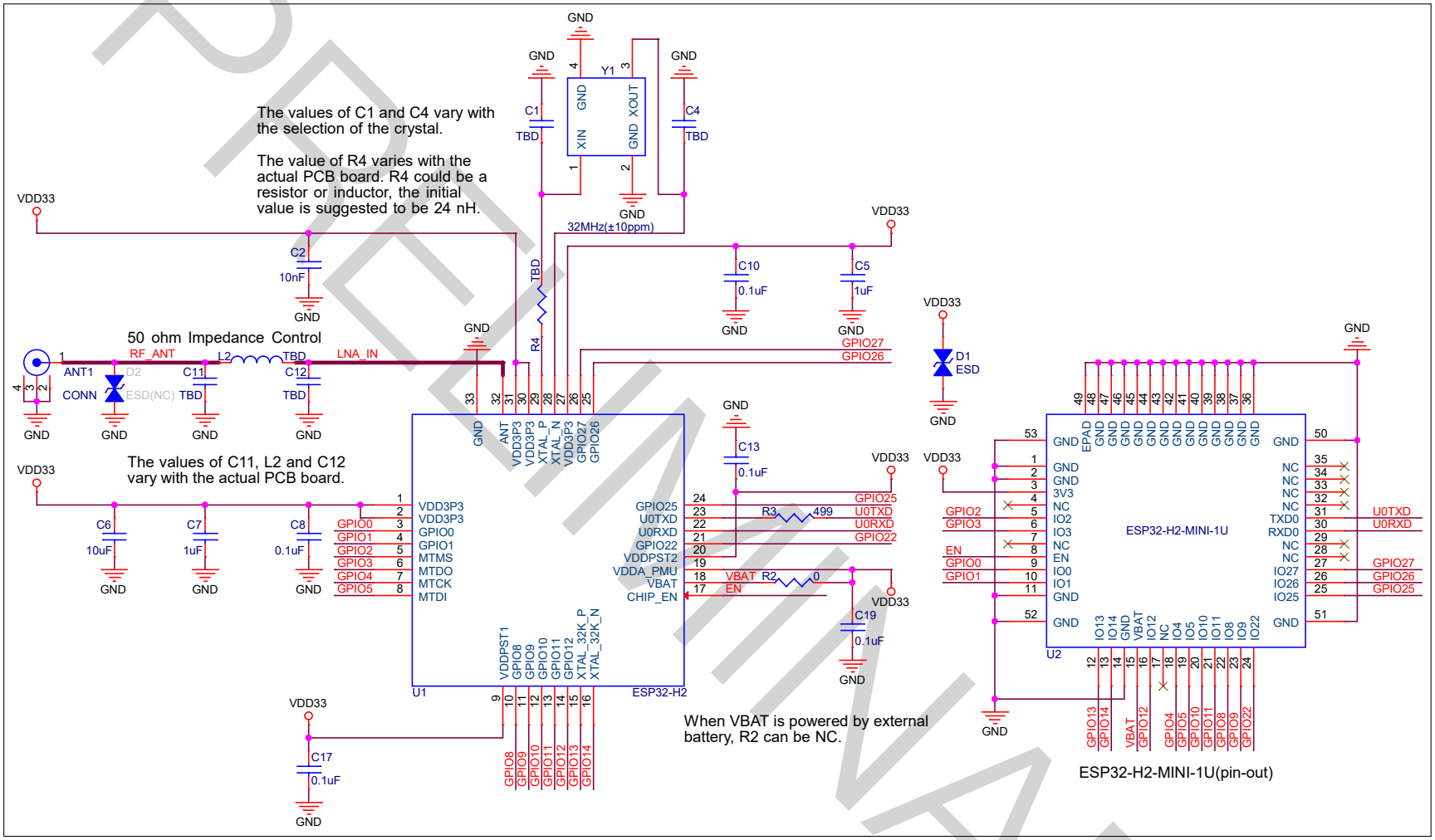

Figure 6: ESP32-H2-MINI-1U Schematics

PRELIMINARY

7 Peripheral Schematics

This is the typical application circuit of the module connected with peripheral components (for example, power supply, antenna, reset button, JTAG interface, and UART interface).

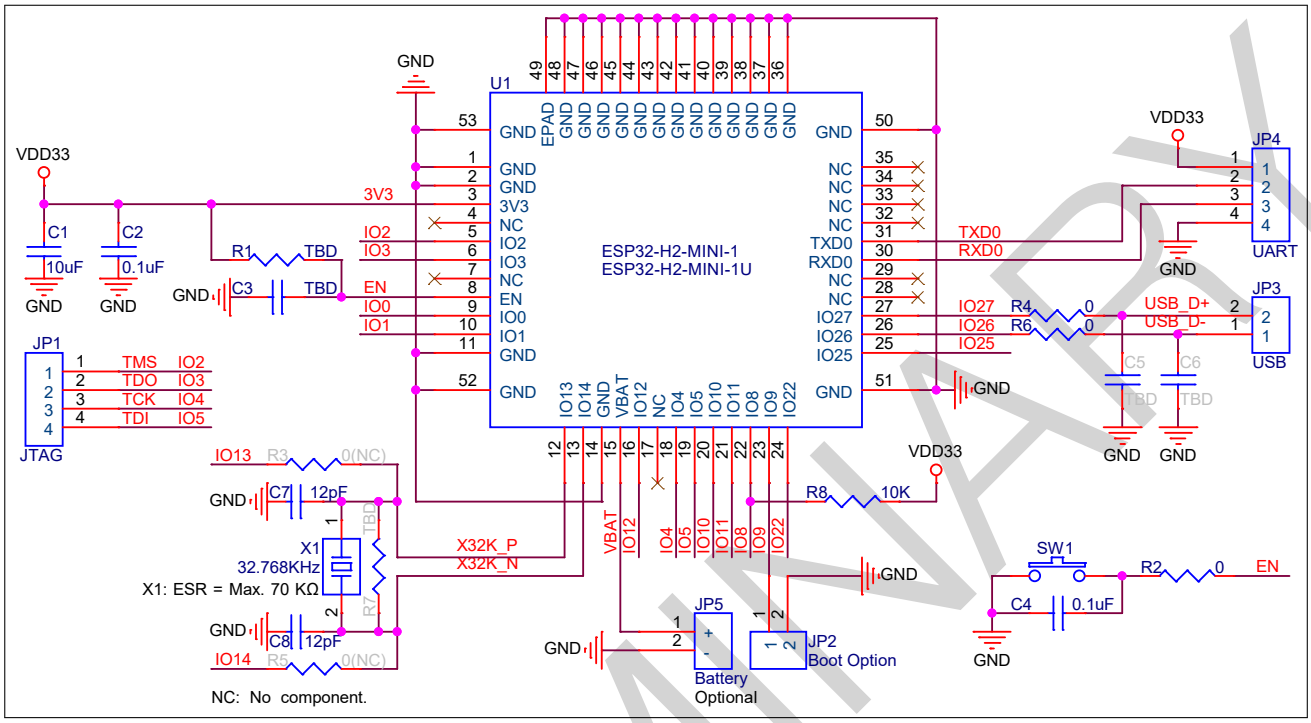

Figure 7: Peripheral Schematics

- Soldering the EPAD to the ground of the base board is not a must, however, it can optimize thermal performance. If you choose to solder it, please apply the correct amount of soldering paste. Too much soldering paste may increase the gap between the module and the baseboard. As a result, the adhesion between other pins and the baseboard may be poor.
- To ensure that the power supply to the ESP32-H2 chip is stable during power-up, it is advised to add an RC delay circuit at the EN pin. The recommended setting for the RC delay circuit is usually R = 10 kΩ and C = 1 μF. However, specific parameters should be adjusted based on the power-up timing of the module and the power-up and reset sequence timing of the chip. For ESP32-H2's power-up and reset sequence timing diagram, please refer to *ESP32-H2 Series Datasheet* > Section *Power Supply*.

PRELIMINARY

8 Physical Dimensions and PCB Land Pattern

8.1 Physical Dimensions

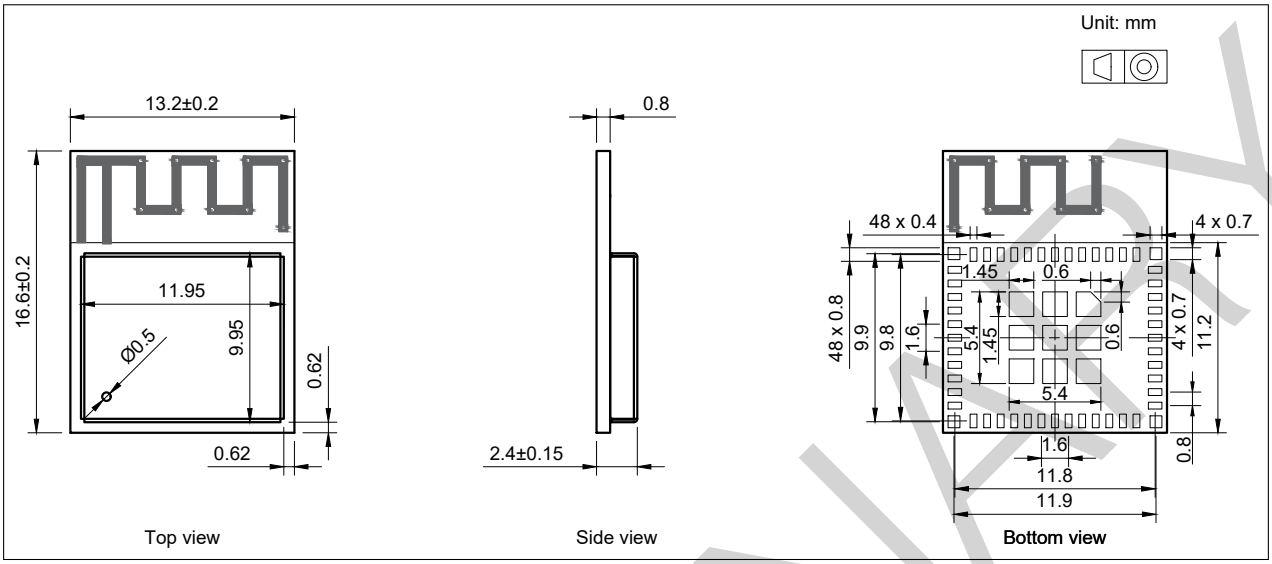

Figure 8: ESP32-H2-MINI-1 Physical Dimensions

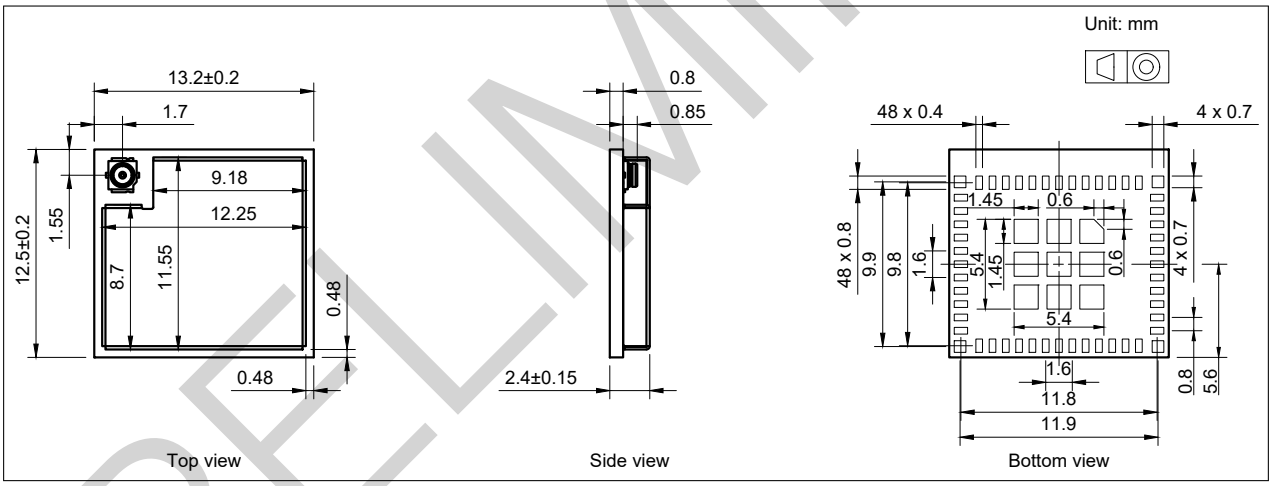

Figure 9: ESP32-H2-MINI-1U Physical Dimensions

Note:

For information about tape, reel, and product marking, please refer to *Espressif Module Packaging Information*.

PRELIMINARY

8.2 Recommended PCB Land Pattern

This section provides the following resources for your reference:

- Figures for recommended PCB land patterns with all the dimensions needed for PCB design. See Figure 10 *ESP32-H2-MINI-1 Recommended PCB Land Pattern* and Figure 11 *ESP32-H2-MINI-1U Recommended PCB Land Pattern*.
- Source files of recommended PCB land patterns to measure dimensions not covered in Figure 10 and Figure 11 . You can view the source files for ESP32-H2-MINI-1 and ESP32-H2-MINI-1U with Autodesk Viewer.

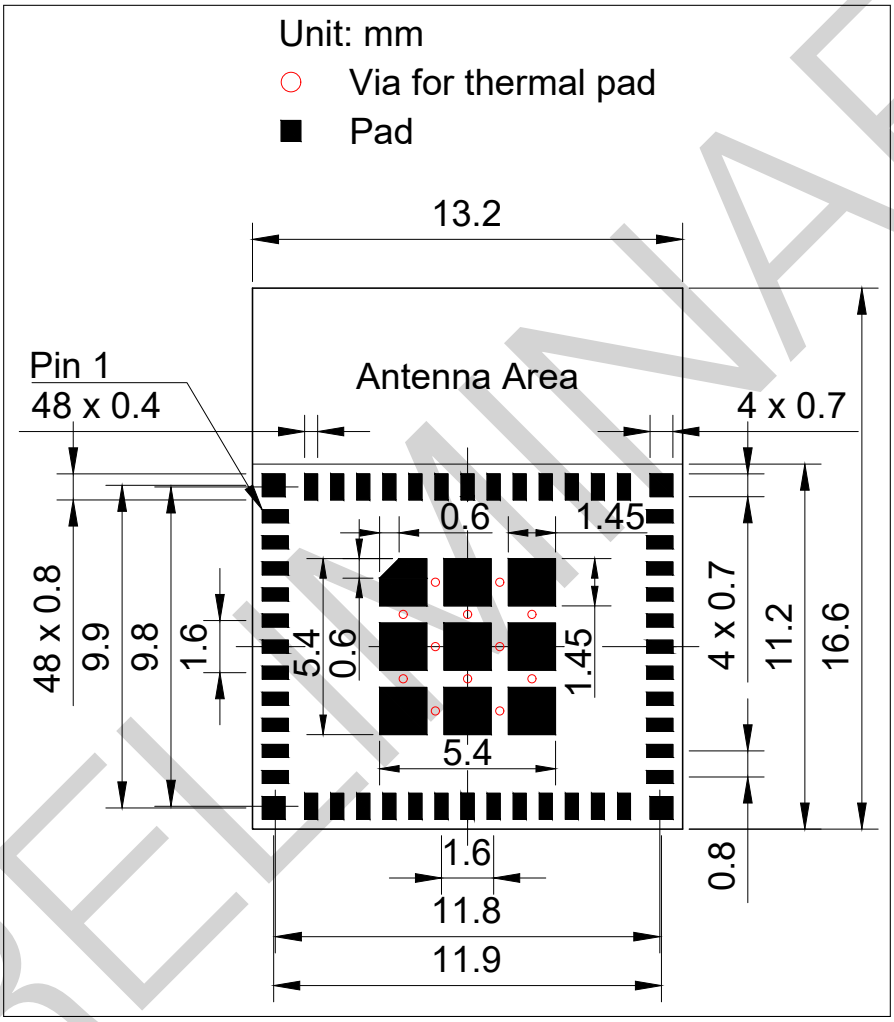

Figure 10: ESP32-H2-MINI-1 Recommended PCB Land Pattern

PRELIMINARY

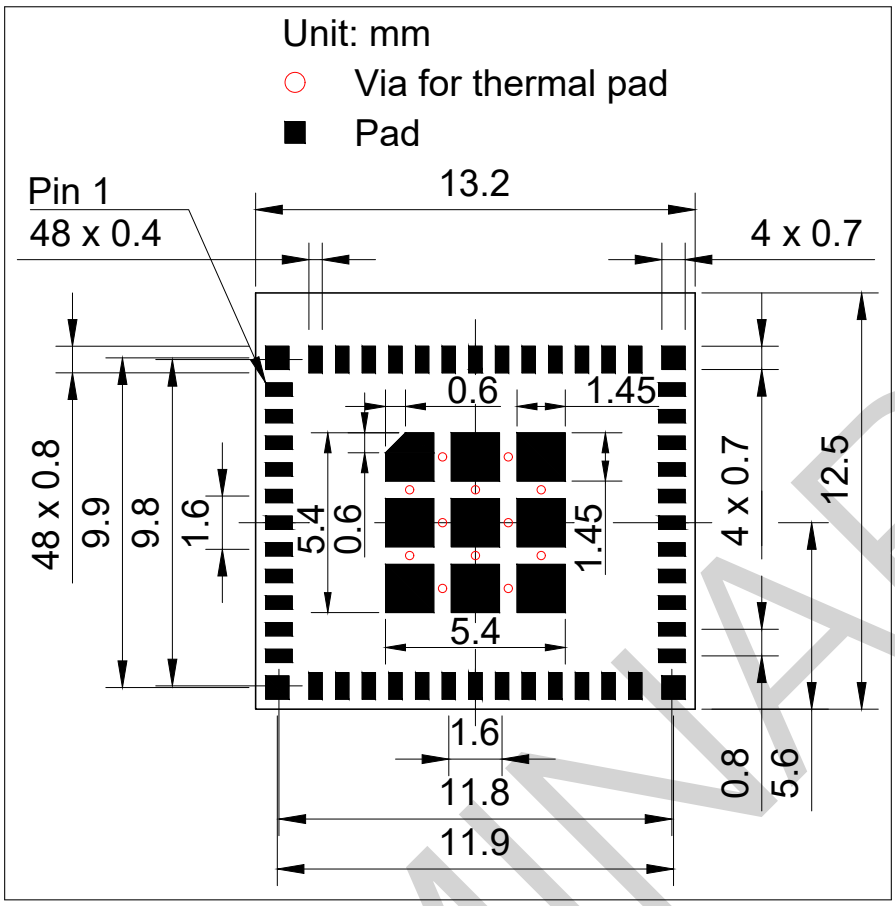

Figure 11: ESP32-H2-MINI-1U Recommended PCB Land Pattern

PRELIMINARY

8.3 Dimensions of External Antenna Connector

ESP32-H2-MINI-1U uses the third generation external antenna connector as shown in Figure 12 *Dimensions of External Antenna Connector*. This connector is compatible with the following connectors:

- W.FL Series connector from Hirose
- MHF III connector from I-PEX
- AMMC connector from Amphenol

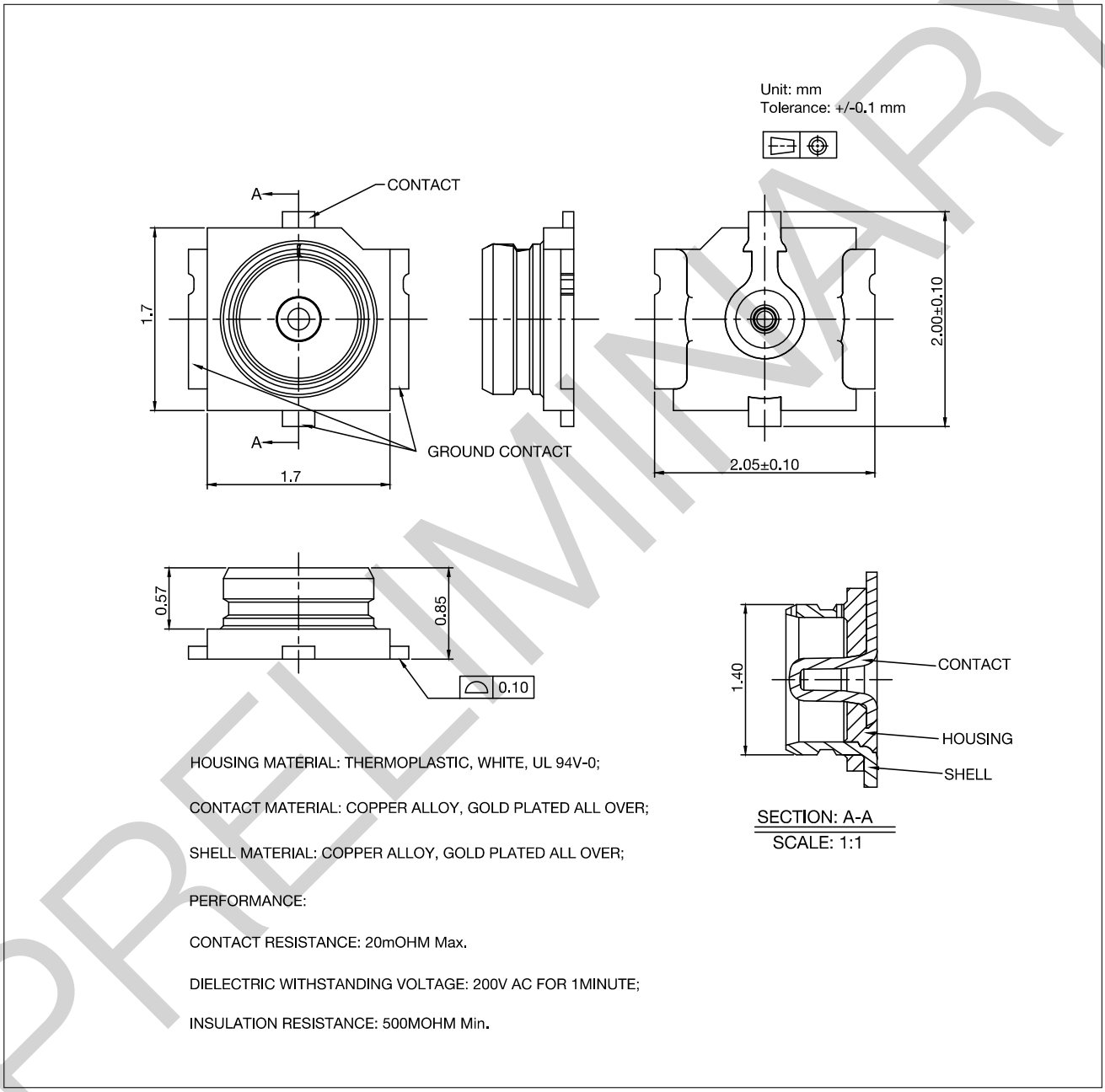

Figure 12: Dimensions of External Antenna Connector

PRELIMINARY

9 Product Handling

9.1 Storage Conditions

The products sealed in moisture barrier bags (MBB) should be stored in a non-condensing atmospheric environment of < 40 °C and 90%RH. The module is rated at the moisture sensitivity level (MSL) of 3.

After unpacking, the module must be soldered within 168 hours with the factory conditions 25±5 °C and 60%RH. If the above conditions are not met, the module needs to be baked.

9.2 Electrostatic Discharge (ESD)

- Human body model (HBM): ±2000 V
- Charged-device model (CDM): ±500 V

9.3 Soldering Profile

9.3.1 Reflow Profile

Solder the module in a single reflow.

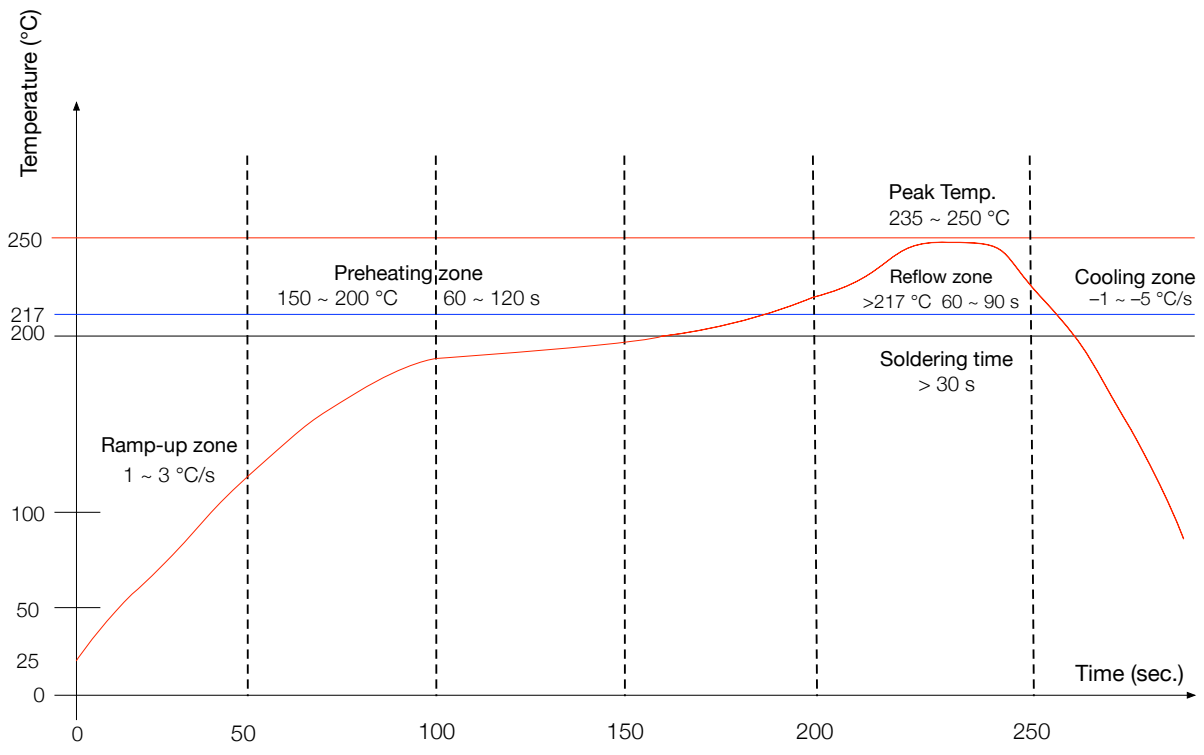

Ramp-up zone — Temp.: 25 ~ 150 °C Time: 60 ~ 90 s Ramp-up rate: 1 ~ 3 °C/s
Preheating zone — Temp.: 150 ~ 200 °C Time: 60 ~ 120 s
Reflow zone — Temp.: >217 °C Time: 60 ~ 90 s; Peak Temp.: 235 ~ 250 °C Time: 30 ~ 70 s
Cooling zone — Peak Temp. ~ 180 °C Ramp-down rate: −1 ~ −5 °C/s
Solder — Sn-Ag-Cu (SAC305) lead-free solder alloy

Figure 13: Reflow Profile

9.4 Ultrasonic Vibration

Avoid exposing Espressif modules to vibration from ultrasonic equipment, such as ultrasonic welders or ultrasonic cleaners. This vibration may induce resonance in the in-module crystal and lead to its malfunction or even failure. As a consequence, **the module may stop working or its performance may deteriorate**.

PRELIMINARY

10 Related Documentation and Resources

Related Documentation

- ESP32-H2 Series Datasheet – Specifications of the ESP32-H2 hardware.
- ESP32-H2 Technical Reference Manual – Detailed information on how to use the ESP32-H2 memory and peripherals.
- ESP32-H2 Hardware Design Guidelines – Guidelines on how to integrate the ESP32-H2 into your hardware product.
- *Certificates*
  https://espressif.com/en/support/documents/certificates
- *ESP32-H2 Product/Process Change Notifications (PCN)*
  https://espressif.com/en/support/documents/pcns?keys=ESP32-H2
- *ESP32-H2 Advisories* – Information on security, bugs, compatibility, component reliability.
  https://espressif.com/en/support/documents/advisories?keys=ESP32-H2
- *Documentation Updates and Update Notification Subscription*
  https://espressif.com/en/support/download/documents

Developer Zone

- ESP-IDF Programming Guide for ESP32-H2 – Extensive documentation for the ESP-IDF development framework.
- *ESP-IDF* and other development frameworks on GitHub.
  https://github.com/espressif
- *ESP32 BBS Forum* – Engineer-to-Engineer (E2E) Community for Espressif products where you can post questions, share knowledge, explore ideas, and help solve problems with fellow engineers.
  https://esp32.com/
- *The ESP Journal* – Best Practices, Articles, and Notes from Espressif folks.
  https://blog.espressif.com/
- See the tabs *SDKs and Demos*, *Apps*, *Tools*, *AT Firmware*.
  https://espressif.com/en/support/download/sdks-demos

Products

- *ESP32-H2 Series SoCs* – Browse through all ESP32-H2 SoCs.
  https://espressif.com/en/products/socs?id=ESP32-H2
- *ESP32-H2 Series Modules* – Browse through all ESP32-H2-based modules.
  https://espressif.com/en/products/modules?id=ESP32-H2
- *ESP32-H2 Series DevKits* – Browse through all ESP32-H2-based devkits.
  https://espressif.com/en/products/devkits?id=ESP32-H2
- *ESP Product Selector* – Find an Espressif hardware product suitable for your needs by comparing or applying filters.
  https://products.espressif.com/#/product-selector?language=en

Contact Us

- See the tabs *Sales Questions*, *Technical Enquiries*, *Circuit Schematic & PCB Design Review*, *Get Samples* (Online stores), *Become Our Supplier*, *Comments & Suggestions*.
  https://espressif.com/en/contact-us/sales-questions

PRELIMINARY

Revision History

Date	Version	Release notes
2023-XX-XX	v0.6	• Updated the description about Boot Mode Control in Section 3.3.3. • Updated the descriptions about resources offered in Section 8.2 *Recommended PCB Land Pattern*. • Updated measurements in Table 13.
2023-05-24	v0.5	Preliminary release

U.S. FCC Statement
The device complies with KDB 996369 D03 OEM Manual v01. Below are integration instructions for host product manufacturers according to the KDB 996369 D03 OEM Manual v01.
List of Applicable FCC Rules
FCC Part 15 Subpart C 15.247 & 15.209
Specific Operational Use Conditions
The module has WiFi and BLE functions.
Operation Frequency:
– Zigbee/Thread: 2405-2480MHzMHz
– Bluetooth: 2402 ~ 2480 MHz
Number of Channel:
– Zigbee/Thread: 26
– Bluetooth: 40
Modulation:
– Zigbee/Thread: BPSK
– Bluetooth: GFSK
Type: On-board PCB Antenna
Gain: 3.96 dBi Max
The module can be used for IoT applications with a maximum 3.96 dBi antenna. The host manufacturer installing this module into their product must ensure that the final composit product complies with the FCC requirements by a technical assessment or evaluation to the FCC rules, including the transmitter operation. The host manufacturer has to be aware not to provide information to the end user regarding how to install or remove this RF module in the user ' s manual of the end product which integrates this module. The end user manual shall include all required regulatory information/warning as show in this manual.
Limited Module Procedures
Not applicable. The module is a single module and complies with the requirement of FCC Part 15.212.
Trace Antenna Designs
Not applicable. The module has its own antenna, and does not need a host ' s printed board microstrip trace antenna, etc.
RF Exposure Considerations
The module must be installed in the host equipment such that at least 20cm is maintained between the antenna and users ' body; and if RF exposure statement or module layout is changed, then the host product manufacturer equired to take responsibility of the module through a change in FCC ID or new application. The FCC ID of the module cannot be used on the final product. In these circumstances, the host manufacturer will be responsible for re-evaluating the end product (including the transmitter) and obtaining a separate FCC authorization.
Antennas
Antenna specification are as follows:
Type: PCB Antenna
Gain: 3.96 dBi
This device is intended only for host manufacturers under the following conditions:The transmitter module may not be co-located with any other transmitter or antenna.
The module shall be only used with the external antenna(s) that has been originally tested and certified with this module.The antenna must be either permanently attached or employ a ' unique ' antenna coupler.
As long as the conditions above are met, further transmitter test will not be required. However, the host manufacturer is still responsible for testing their end-product for any additional compliance requirements required with this module installed (for example, digital device emissions, PC peripheral requirements, etc.).
Label and Compliance Information
Host product manufacturers need to provide a physical or e-label stating " Contains FCC ID: 2AC7Z-ESPH2MINI1 " with their finished product. Information on test modes and additional testing requirements
Operation Frequency:
– Zigbee/Thread: 2405-2480MHz
– Bluetooth: 2402 ~ 2480 MHz
Number of Channel:
– Zigbee/Thread: 26
– Bluetooth: 40
Modulation:
– Zigbee/Thread: BPSK
– Bluetooth: GFSK
Host manufacturer must perform test of radiated and conducted emission and spurious emission, etc., according to the actual test modes for a stand-alone modular transmitter in a host, as well as for multiple simultaneously transmitting modules or other transmitters in a host product. Only when all the test results of test modes comply with FCC requirements, then the end product can be sold legally.

Additional testing, Part 15 Subpart B compliant
The modular transmitter is only FCC authorized for FCC Part 15 Subpart C 15.247 & 15.209 and that the host product manufacturer is responsible for compliance to any other FCC rules that apply to the host not covered by the modular transmitter grant of certification. If the grantee markets their product as being Part 15 Subpart B compliant (when it also contains unintentional-radiator digital circuity), then the grantee shall provide a notice stating that the final host product still requires Part 15 Subpart B compliance testing with the modular transmitter installed.

PRELIMINARY

This equipment has been tested and found to comply with the limits for a Class B digital device, pursuant to Part15 of the FCC Rules. These limits are designed to provide reasonable protection against harmful interference in a residential installation. This equipment generates, uses and can radiate radio frequency energy and, if not installed and used in accordance with the instructions, may cause harmful interference to radio communications.
However, there is no guarantee that interference will not occur in a particular installation. If this equipment does cause harmful interference to radio or television reception, which can be determined by turning the equipment off and on, the user is encouraged to try to correct the interference by one of the following measures:
Reorient or relocate the receiving antenna. Increase the separation between the equipment and receiver.
Connect the equipment into an outlet on a circuit different from that to which the receiver is connected.
Consult the dealer or an experienced radio/TV technician for help.
This device complies with Part 15 of the FCC Rules. Operation is subject to the following two conditions:
This device may not cause harmful interference.
This device must accept any interference received, including interference that may cause undesired operatio
Caution:
Any changes or modifications not expressly approved by the party responsible for compliance could void the user ' sauthority to operate the equipment.
This equipment complies with FCC RF radiation exposure limits set forth for an uncontrolled environment. This device and its antenna must not be co-located or operating in conjunction with any other antenna or transmitter. The antennas used for this transmitter must be installed to provide a separation distance of at least 20 cm from
all persons and must not be co-located or operating in conjunction with any other antenna or transmitter.

OEM Integration Instructions
This device is intended only for OEM integrators under the following conditions:
The transmitter module may not be co-located with any other transmitter or antenna. The module shall be only used with the external antenna(s) that has been originally tested and certified with this module.
As long as the conditions above are met, further transmitter test will not be required. However, the OEM integrator is still responsible for testing their end-product for any additional compliance requirements required with this module installed (for example, digital device emissions, PC peripheral requirements, etc.).
Validity of Using the Module Certification
In the event that these conditions cannot be met (for example certain laptop configurations or co-location with another transmitter), then the FCC authorization for this module in combination with the host equipment is no longer considered valid and the FCC ID of the module cannot be used on the final product. In these circumstances, the OEM integrator will be responsible for re-evaluating the end product (including the transmitter) and obtaining a separate FCC authorization.
End Product Labeling
The final end product must be labeled in a visible area with the following: " Contains Transmitter Module FCC ID: 2AC7Z-ESPH2MINI1 " .

Industry Canada Statement
This device complies with Industry Canada ' s licence-exempt RSSs. Operation is subject to the following two conditions:
This device may not cause interference; and his device must accept any interference, including interference that may cause undesired operation of the device.
Le pr é sent appareil est conforme aux CNR d ' Industrie Canada applicables aux appareils radio exempts de licence. L ' exploitation est autoris é e aux deux conditions suivantes: l ' appareil ne doit pas pr oduire de brouillage, et l ' utilisateur de l ' appareil doit accepter tout brouillage radio é lectrique subi, m ê me si le brouillage est susceptible d ' en compromettre le fonctionnement.

Radiation Exposure Statement
This equipment complies with IC radiation exposure limits set forth for an uncontrolled environment. This equipment should be installed and operated with minimum distance 20 cm between the radiator and your body.
D é claration d ' exposition aux radiations:
Cet é quipement est conforme aux limites d ' exposition aux rayonnements ISED é tablies pour un environnement non contrôl é . Cet é quipement doit ê tre install é et utilis é avec un minimum de 20 cm de distance entre la source de rayonnement et votre corps.

RSS-247 Section 6.4 (5)
The device could automatically discontinue transmission in case of absence of information to transmit, or operational failure. Note that this is not intended to prohibit transmission of control or signaling information or the use of repetitive codes where required by the technology.
L ' appareil peut interrompre automatiquement la transmission en cas d ' absence d ' informations à transmettre ou de panne op é rationnelle. Notez que ceci n ' est pas destin é à interdire la transmissi on d ' informations de contrôle ou de signalisation ou l ' utilisation de codes r é p é titifs lorsque cela est requis par la technologie.
This device is intended only for OEM integrators under the following conditions (For module device use):
The antenna must be installed such that 20 cm is maintained between the antenna and users, and
The transmitter module may not be co-located with any other transmitter or antenna.
As long as 2 conditions above are met, further transmitter test will not be required. However, the OEM integrator is still responsible for testing their end-product for any additional compliance requirements required with this module installed
Cet appareil est conçu uniquement pour les intégrateurs OEM dans les conditions suivantes (Pour utilisa- tion de dispositif module):
L ' antenne doit être installée de telle sorte qu ' une distance de 20 cm est respectée entre l ' antenne et les utilisateurs, et
Le module émetteur peut ne pas être coïmplanté avec un autre émetteur ou antenne.
Tant que les 2 conditions ci-dessus sont remplies, des essais supplémentaires sur l ' émetteur ne seront pas nécessaires. Toutefois, l ' intégrateur OEM est toujours responsable des essais sur son produit final pour toutes exigences de conformité supplémentaires requis pour ce module installé.

IMPORTANT NOTE:
In the event that these conditions can not be met (for example certain laptop configurations or colocation with another transmitter), then the Canada authorization is no longer considered valid and the IC ID can not be used on the final product. In these circumstances, the OEM integrator will be responsible for re-evaluating the end product (including the transmitter) and obtaining a separate Canada authorization.

NOTE IMPORTANTE:
Dans le cas où ces conditions ne peuvent être satisfaites (par exemple pour certaines configurations d ' ordinateur portable ou de certaines co-localisation avec un autre émetteur), l ' autorisation du Canada n ' est plus considéré
comme valide et l ' ID IC ne peut pas être utilisé sur le produit final. Dans ces circonstances, l ' intégrateur OEM
sera chargé de réévaluer le produit final (y compris l ' émetteur) et l ' obtention d ' une autorisation distincte au
Canada.

End Product Labeling
This transmitter module is authorized only for use in device where the antenna may be installed such that 20 cm may be maintained between the antenna and users. The final end product must be labeled in a visible area with the following: " Contains IC: 21098-ESPH2MINI1 " . Plaque signalétique du produit final Ce module émetteur est autorisé uniquement pour une utilisation dans un dispositif où l ' antenne peut être installée de telle sorte qu ' une distance de 20cm peut être maintenue entre l ' antenne et les utilisateurs. Le produit inal doit être étiqueté dans un endroit visible avec l ' inscription suivante: " Contient des IC: 21098-ESPH2MINI1 " .

Manual Information to the End User
The OEM integrator has to be aware not to provide information to the end user regarding how to install or remove this RF module in the user ' s manual of the end product which integrates this module. The end user manual shall include all required regulatory information/warning as show in this manual.
Manuel d ' information à l ' utilisateur final
L ' intégrateur OEM doit être conscient de ne pas fournir des informations à l ' utilisateur final quant à la façon
d ' installer ou de supprimer ce module RF dans le manuel de l ' utilisateur du produit fin manuel de l ' utilisateur final doit inclure toutes les informations réglementaires requises et avertissements comme indiqué dans ce manual.

PRELIMINARY

www.espressif.com

Disclaimer and Copyright Notice

Information in this document, including URL references, is subject to change without notice.

ALL THIRD PARTY'S INFORMATION IN THIS DOCUMENT IS PROVIDED AS IS WITH NO WARRANTIES TO ITS AUTHENTICITY AND ACCURACY.

NO WARRANTY IS PROVIDED TO THIS DOCUMENT FOR ITS MERCHANTABILITY, NON-INFRINGEMENT, FITNESS FOR ANY PARTICULAR PURPOSE, NOR DOES ANY WARRANTY OTHERWISE ARISING OUT OF ANY PROPOSAL, SPECIFICATION OR SAMPLE.

All liability, including liability for infringement of any proprietary rights, relating to use of information in this document is disclaimed. No licenses express or implied, by estoppel or otherwise, to any intellectual property rights are granted herein.

The Wi-Fi Alliance Member logo is a trademark of the Wi-Fi Alliance. The Bluetooth logo is a registered trademark of Bluetooth SIG.

All trade names, trademarks and registered trademarks mentioned in this document are property of their respective owners, and are hereby acknowledged.

Copyright © 2023 Espressif Systems (Shanghai) Co., Ltd. All rights reserved.