Wiser CT Specification

Contents

1 General Features 2

1.1 System 2

1.2 Metering Measurements 2

1.3 Power Supply 2

1.4 Memory Backup 2

1.5 Indicator 2

1.6 ZigBee 2

2 Environmental Requirements 3

2.1 Environmental Ratings 3

3 Regulatory Requirements 3

3.1 Agency Approval 3

4 Mechanical Outline 3

4.1 Base module 3

4.2 Current Transformer 3

5 Electrical 4

5.1 Current Transformers (CT) 4

5.2 Switches 4

5.3 Terminals 4

6 ZigBee Profile 5

6.1 Supported Endpoints 5

6.2 Supported Clusters 6

7 Application Requirements 8

7.1 Auto Join 8

7.2 Power Factor Calculation (Optional) 8

1 General Features

1.1 System

Metering type:	ZigBee SEP 1.1x power meter

1.2 Metering Measurements

Power measurement (W)			
Power measurement reporting rate:	Minimum 2 seconds for one channel. Programmable in 1 second step.		
Power measurement range:	45 – 48,000W/Channel		
Power measurement (W)	With calibrated CT clamp on specified port		
Power measurement accuracy:		PF = 1	0.8 < PF < 1
	Power < 100W	+/- 3W	+/- 4W
	Power > 100W	+/- 3%	+/- 4%
Power measurement (W)	With non-calibrated CT clamp		
Power measurement accuracy:		PF = 1	0.8 < PF < 1
	Power < 100W	+/- 5W	+/- 6W
	Power > 100W	+/- 5%	+/- 6%

- Remark: Only Computime approved CTs can be used.
- Remark: Calibration and testing only be carried with current lower than 100A.

1.3 Power Supply

Power supply	90- 240 VAC

1.4 Memory Backup

Memory backup	Non volatile memory backup. All current summation attributes saved to non volatile memory to keep cumulative current consumption through power outages. Data can be backup in every 60 seconds or longer
Flash memory	Store firmware for Over The Air (OTA) upgrade

1.5 Indicator

LED indicator	Network state indicator, minimum bi-color (red & green)

1.6 ZigBee

ZigBee	ZigBee Smart Energy 1.1x Capable
Frequency	2405-2480MHz
Communication range	Up to 400m LOS in open site

2 Environmental Requirements

2.1 Environmental Ratings

	Min.	Max.	Units
Operating Temperature	-20	60	℃
Storage Temperature	-20	80	℃
Operating Humidity	5	95	%RH

- Indoor use only

3 Regulatory Requirements

3.1 Agency Approval

FCC Regulation
UL/CUL/ETL
RoHS
IEC 61000

4 Mechanical Outline

4.1 Base module

Maximum dimensions: 6”x4.5”x2”

4.2 Current Transformer

The maximum dimensions for the current transformer are show in the drawing below:

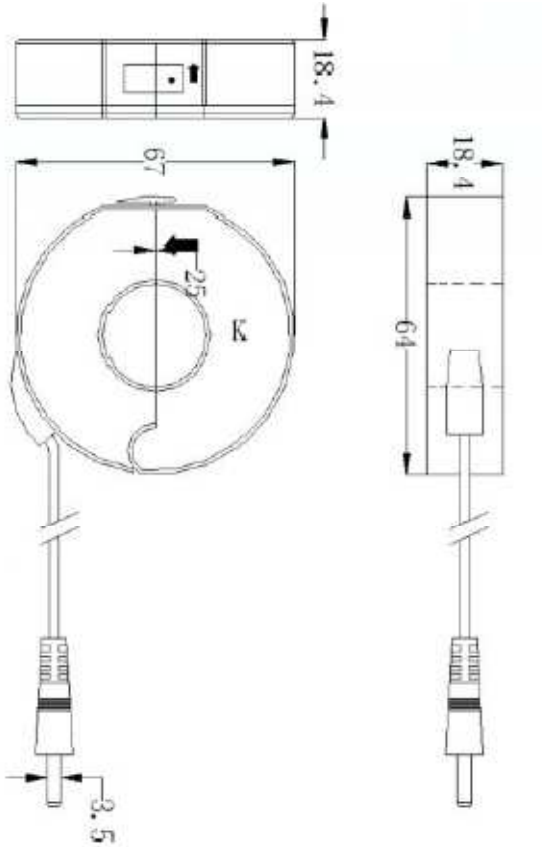

5 Electrical

5.1 Current Transformers (CT)

The current transformers must be capable of measuring either consumption or generation.

5.2 Switches

No	Switch	Function
1	PB	Push button for manual commissioning/decommissioning (see section 7.1 for auto join requirements)

5.3 Terminals

AC L1	Line 1 input voltage
AC Neutral	AC return
CT Channel 1	Input socket 1 for CT clamp
CT Channel 2	Input socket 2 for CT clamp
CT Channel 3	Input socket 3 for CT clamp
CT Channel 4	Input socket 4 for CT clamp

6 ZigBee Profile

The device shall support ZigBee Smart Energy Profile 1.1 at a minimum.

6.1 Supported Endpoints

The device shall provide one endpoint per channel. Each endpoint shall have a Simple Metering cluster and provide access to the other clusters (i.e. the Basic cluster for Endpoint 4 will actually point to the Basic cluster for Endpoint 1 to eliminate the need to duplicate and synchronize data).

Any setting on Basic Cluster on any endpoint will be duplicated to all other endpoint

End Point 1:

Profile ID: 0x0109
Device Type/Device ID: 0x0501
Clusters:

Server	Client
Basic Cluster(0x0000)	Time Cluster(0x000A)
Simple Meter Cluster(0x0702)	OTA Cluster(0x0019)
Identify Cluster (0x0003)	Key Establishment Cluster(0x0800)
Key Establishment Cluster(0x0800)	

End Point 2:

Profile ID: 0x0109
Device Type/Device ID: 0x0501
Clusters:

Server	Client
Basic Cluster(0x0000)	
Simple Meter Cluster(0x0702)	

End Point 3:
Profile ID: 0x0109
Device Type/Device ID: 0x0501
Clusters:

Server	Client
Basic Cluster(0x0000)	

Simple Meter Cluster(0x0702)	

End Point 4:

Profile ID: 0x0109

Device Type/Device ID: 0x0501

Clusters:

Server	Client
Basic Cluster(0x0000)	
Simple Meter Cluster(0x0702)	

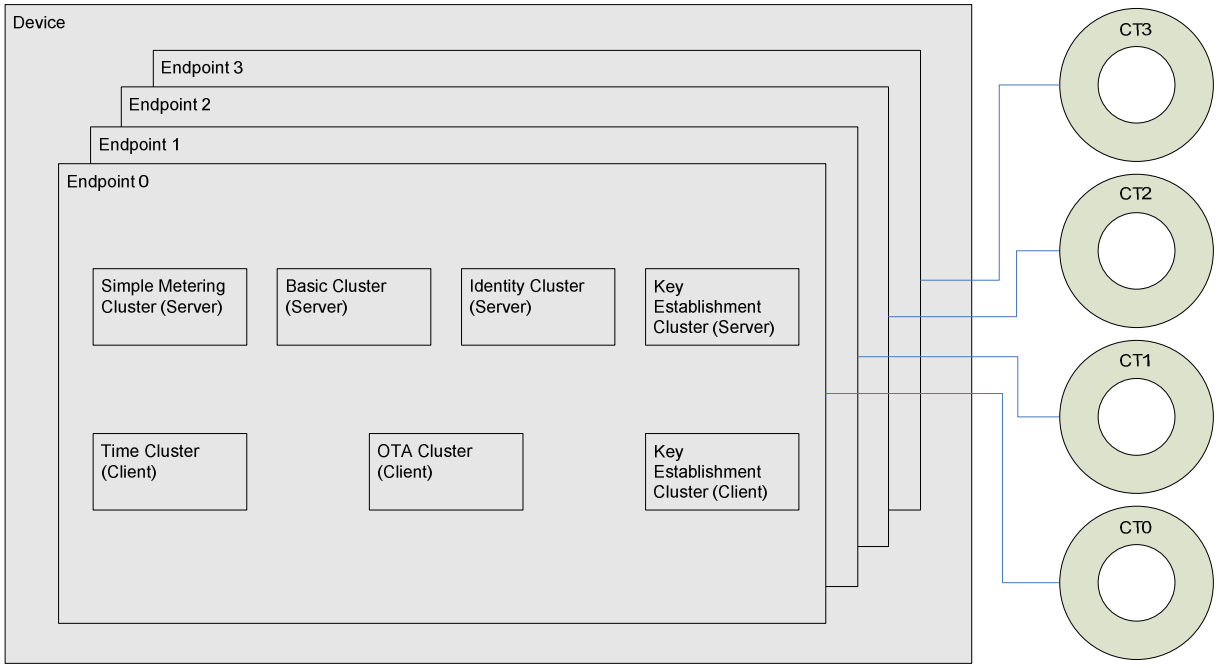

6.2 Supported Clusters

Server side	Client side
Common	
Basic	
Identify	

Key Establishment	
	Time
	OTA
SE	
Simple Metering	
	Key Establishment

Each Simple Metering Cluster shall contain the following attributes:

0x00 - Reading information set						
Attribute #	**Name**	**Type**	**Range**	**Access**	**Default**	**Mandatory/Optional**
0x0000	Current Summation Delivered	Unsigned 48-bit Integer	0x000000000000 to 0xFFFFFFFFFFFF	RO	-	Mandatory
0x0001	Current Summation Received	Unsigned 48-bit Integer	0x000000000000 to 0xFFFFFFFFFFFF	RO	-	Mandatory
0x0006	Power Factor	Signed 8-bit Integer	-100 to 100	RO	0x00	Optional
0x02 -Meter Status						
Attribute #	**Name**	**Type**	**Range**	**Access**	**Default**	**Mandatory/Optional**
0x0200	Status	8-bit BitMap	0x00 to 0xFF	RO	0x00	Mandatory
0x03 - Formatting						
Attribute #	**Name**	**Type**	**Range**	**Access**	**Default**	**Mandatory/Optional**
0x0300	Unit of Measure	8-bit Enumeration	0x00 to 0xFF	RO	0x00	Mandatory
0x0301	Multiplier	Unsigned 24-bit Integer	0x000000 to 0xFFFFFF	RO	-	Mandatory
0x0302	Divisor	Unsigned 24-bit Integer	0x000000 to 0xFFFFFF	RO	-	Mandatory
0x0303	Summation Formatting	8-bit Bit Map	0x00 to 0xFF	RO	-	Mandatory
0x0306	Metering Device Type	8-bit Bit Map	0x00 to 0xFF	RO	-	Mandatory
0x04 - Historical Consumption						
Attribute #	**Name**	**Type**	**Range**	**Access**	**Default**	**Mandatory/Optional**
0x0400	Instantaneous Demand	Signed 24-bit Integer	-8,388,607 to 8,388,607	RO	0x00	Mandatory

All other clusters shall adhere to the ZigBee Smart Energy Specification.

7 Application Requirements

7.1 Auto Join

The device shall power up initially in a state that beacons the ZigBee Smart Energy network at a minimum of once per minute to facilitate joining the HAN. This state shall also become active as soon as the device leaves a HAN. The device shall remain in this state until it joins a HAN.

7.2 Power Factor Calculation (Optional)

The device shall be capable of calculating the power factor and reporting this measurement upon request.

Disclaimer

Schneider Electric reserves the right to make changes without further notice to any products herein to improve reliability, function, or design. Schneider Electric does not assume any liability arising out of the application or use of any product described herein; neither does it convey any license under its patent rights, not the rights of others.

FCC Statement

This equipment has been tested and found to comply with the limits for a Class B digital device, pursuant to Part 15 of the FCC Rules. These limits are designed to provide reasonable protection against harmful interference in a residential installation. This equipment generates uses and can radiate radio frequency energy and, if not installed and used in accordance with the instructions, may cause harmful interference to radio communications. However, there is no guarantee that interference will not occur in a particular installation. If this equipment does cause harmful interference to radio or television reception, which can be determined by turning the equipment off and on, the user is encouraged to try to correct the interference by one or more of the following measures:

-- Reorient or relocate the receiving antenna.

-- Increase the separation between the equipment and receiver.

-- Connect the equipment into an outlet on a circuit different from that to which the receiver is connected.

-- Consult the dealer or an experienced radio/TV technician for help.

This device complies with part 15 of the FCC Rules. Operation is subject to the following two conditions:

(1) This device may not cause harmful interference, and (2) this device must accept any interference received, including interference that may cause undesired operation.

Changes or modifications not expressly approved by the party responsible for compliance could void the user's authority to operate the equipment.

The distance between user and products should be no less than 20cm