ELKAY® With FLEXI-GUARD®

INSTALLATION & USE MANUAL

SWIRLFLO® Refrigerated fountains with FLEXI-GUARD® and ezH2O® Bottle Filler

FOR USE WITH COMPLETE KIT MODELS LZWS-EDFBM117K-W1 AND LZWS-EDFBMR117K-W1

Pre-installation steps for Connected models only

Install Zurn Gateway and Register Product in plumbSMART

1. Install Zurn Gateway (required and sold separately) per the gateway instructions manual, if an existing gateway is not within communication range.
2. Be sure the gateway is powered on and connected (per gateway installation instructions) prior to installing your bottle filler. Serial number located on back of the Gateway, is required to register the gateway to your tenant.
3. If you have not already set up an tenant account and your administrator access, request at 844-987-6737 or zurnconnectedproducts@zurn.com
4. Log into plumbsmart.zurn.com
5. Register Connected product in plumbSMART using plumbSMART Registration ID located on plumbSMART ID Registration Label, (see Fig. 9, pg. 13). (Watch How-To videos to get started. Located in the support section inside the portal).

INSTALLER

CAUTION: Review these instructions before beginning installation. Be sure that installation conforms to all plumbing, electrical and other applicable codes.

WARNING: When installation is complete, ensure these instructions are left in the plastic bag provided inside the installed unit for future reference.

WARNING: Service to be performed by authorized service personnel only.

NOTE: It is common practice to ground electrical hardware such as telephones, computers and other devices to available water lines. This can, however, cause electrical feedback in the plumbing circuit, which results in an “electrolysis” effect occurring in the fountain. This may result in water which has a metallic taste to it or has a noticeable increase in the metallic content of the water.

When inspecting plumbing circuit, remember the line may be grounded some distance from the installation, and may occur outside the building or area in which the unit is being installed.

This condition can be avoided (in most cases) by using recommended materials during installation. Any drain fittings provided by the installer should be made of ***plastic*** which will *electronically isolate* the fountain from the remainder of the building’s plumbing circuits.

Patent zurn-elkay.com/patents

⚠ **WARNING:** Cancer and Reproductive Harm - www.P65Warnings.ca.gov
⚠ **ADVERTENCIA:** Cáncer y daño reproductivo - www.P65Warnings.ca.gov
⚠ **AVERTISSEMENT:** Cancer et effets néfastes sur la reproduction - www.P65Warnings.ca.gov

Models EDFPBM117WS-FW1

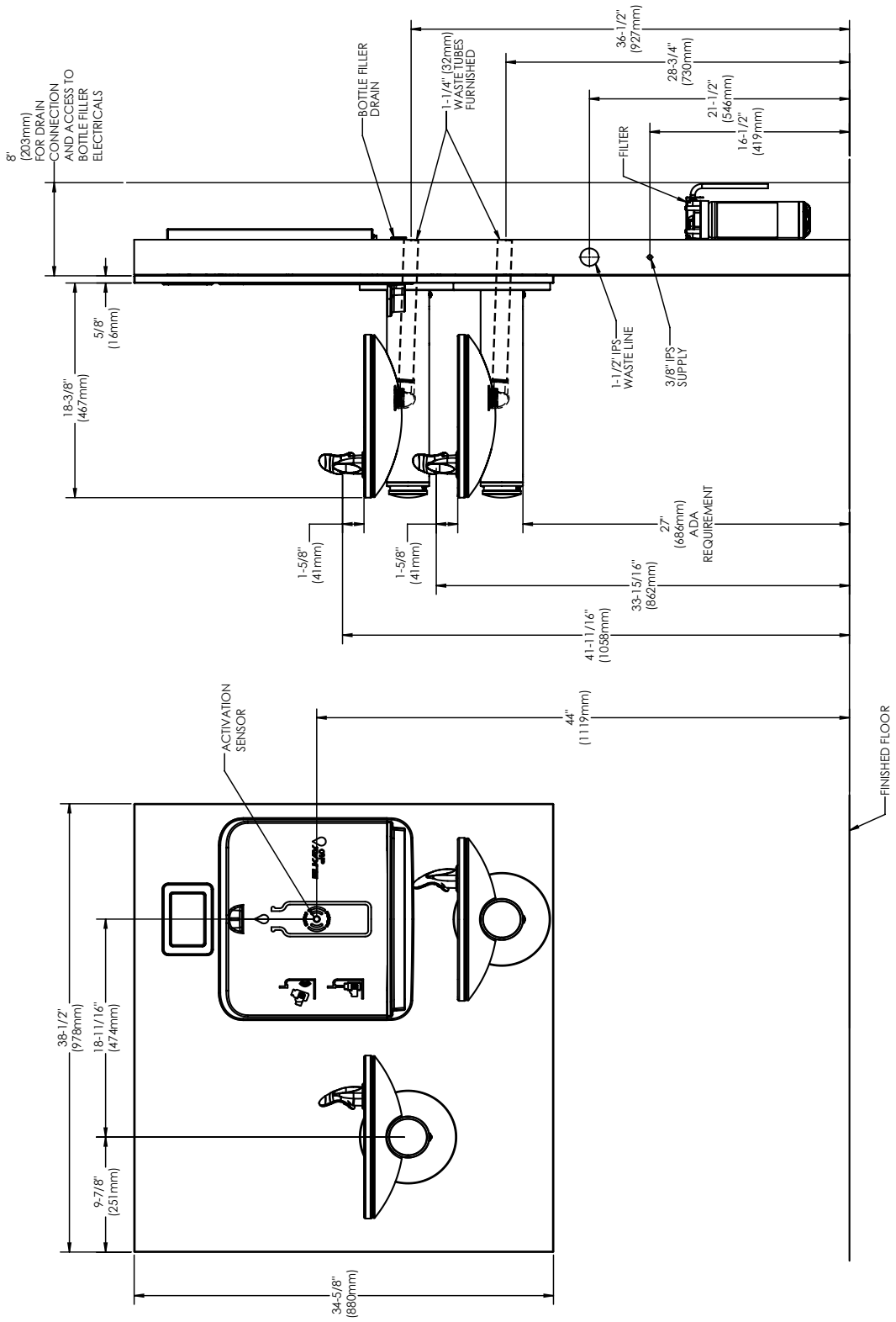

****NEW INSTALLATIONS MUST USE GROUND FAULT CIRCUIT INTERRUPTER *GFCI)**
MAXIMUM WATER SUPPLY PRESSURE: 105 PSI (0.73MPA).

Figure 1 - Rough-in Dimensions

Table of Contents

1. Safety 4

1.1 General 4

1.2 Safety Alert Symbol. 4

1.3 Definitions 4

1.4 Personal Safety. 4

1.5 Property Damage 6

2. General Information. 6

2.1 Installation / Use & Care 6

2.2 Disclaimer 6

2.3 Serial Number Location 6

2.4 Contact Information. 6

2.5 Notice of Changes 6

2.6 Warranty 6

3. Installation Preparation - Read Before Beginning Installation 7

4. Tools and Supplies 7

4.1 Tools Required 7

4.2 Installer-Supplied Parts. 7

4.3 Tools/Items required but not provided. 7

5. Ratings 7

5.1 EDFPBM117WS Series 7

6. Preparation 8

6.1 General Information 8

7. Installation 9

8. Service 11

1. Safety

Think Safety

Before performing any work, read and understand the safety instructions in this manual.

1.1 General

Elkay Manufacturing Company (Elkay) cannot anticipate every possible circumstance that might involve a potential hazard during the installation of this product. The warnings and instructions in this Installation / Use & Care manual are, therefore, not all-inclusive. If a tool, installation procedure, or work method that is not specifically recommended by Elkay is used, you must be satisfied that it is safe for yourself and others. You should also make sure that the product will not be damaged by the methods you choose.

Most work-related accidents are caused by failure to observe basic safety rules or precautions. An accident can often be avoided by recognizing potentially hazardous situations before an accident occurs. As you install and maintain this product, you must be alert to potential hazards. You should also have the necessary training, skills, and tools to perform any installation or maintenance procedure.

1.2 Safety Alert Symbol

This is the safety alert symbol. It is used to alert you to potential personal injury hazards. Obey all safety messages that follow this symbol to avoid possible injury or death.

This manual contains WARNINGS, CAUTIONS, NOTICES, SAFETY INSTRUCTIONS, and NOTES which must be followed to prevent the possibility of improper service, damage to the equipment, personal injury, or death. The following key words call the reader's attention to potential hazards.

Hazards are identified by the "Safety Alert Symbol" and followed by a signal word such as "WARNING" or "CAUTION".

1.3 Definitions

⚠DANGER The signal word that indicates a hazard with a high level of risk which, if not avoided, will result in death or serious injury.

⚠WARNING The signal word that indicates a hazard with a medium level of risk which, if not avoided, could result in death or serious injury.

⚠CAUTION The signal word that indicates a hazard with a low level of risk which, if not avoided, could result in minor or moderate injury.

NOTICE The signal word that indicates equipment or property damage can result if instructions are not followed.

Authorized Service Personnel – Factory trained personnel or personnel having working knowledge of electrical, plumbing and machine (appliance) maintenance procedures.

1.4 Personal Safety

⚠DANGER

- **Please read these instructions completely before starting the installation or performing any service. Failure to follow the instructions and safety precautions in this manual can result in serious injury or death.**
- **Electric supply must be identical in voltage, cycle, and phase to that specified on nameplate.**
- **Electrical power supply must include ground-fault circuit interrupter (GFCI) protection.**
- **A means for disconnecting electrical supply to the unit must be incorporated in the fixed wiring in accordance with wiring rules. This is to allow electrical disconnection of the unit from electrical supply after installation. Failure to do so can result in severe injury to person or death**.

⚠WARNING

Follow all instructions related to the installation of this product (unit).
For use with clean, clear potable drinking water only. Do not use with water that is microbiologically unsafe or of unknown quality without adequate disinfection before the system.
Installation and connection to water and electrical mains must be in compliance with local and national laws.

To avoid product or property damage, personal injury, or even possible death, carefully read, understand, and follow all the instructions in this Installation / Use & Care Manual before installing this product.

After installation, keep these instructions in a safe location for future reference.

Do not operate power tools unless you read and understand the instructions and warnings in this and all other applicable labels or manuals. Proper use of tools and the products described in this guide is your responsibility.

Lifting Hazard

- To avoid personal injury, always use these proper lifting techniques and use two people to move heavy cartons.
- Use appropriate lifting devices to move the load.
- Always use two people when lifting heavy or bulky cartons. DO NOT attempt to lift objects that are too heavy.

Power Tool Hazard

- To prevent personal injury or possible death, always follow the electrical safety recommendations of the power tool's manufacturer
- Do not use power tools in an unsafe manner
- Power tools should only be connected to a circuit protected by a ground-fault circuit interrupter (GFCI).
- If an extension cord is required, always use an OSHA approved extension cord.

Shock and Electrocution Hazards

Failure to follow these instructions could result in severe burns, significant injuries, and even death.

Water will conduct electric current to create a short circuit, resulting in injury or death.

- Never use electric power tools around water or wet floors/surfaces.
- Keep all liquids away from electrical cords and power tools.
- If an extension cord is required, always use an OSHA approved cord.
- DO NOT create a short circuit between a source of electricity and a liquid by being in contact with both simultaneously.

Contacting live electrical wiring with power tools or hand tools can cause serious injury or death.

Prior to any maintenance, make sure the unit is unplugged and circuit breakers are turned OFF.

Prior to installation, test for live circuits or wiring inside the wall before cutting or drilling into the wall.

Failure to follow these instructions could result in personal injuries, water damage, and other damage to floors, pipes, walls, and other portions of your building or home.

⚠ CAUTION

Follow all instructions related to installation and/ or maintenance of this product.

This appliance is not intended for use by persons with reduced physical, sensory, or mental capabilities or lack of experience and knowledge, unless they have been given supervision or instructions concerning use of the appliance by a person responsible for their safety. Children shall not play with the appliance. Cleaning and user maintenance shall not be made by children without supervision.

To prevent a metallic taste or increased metal content in the water due to an electrolysis process caused by electrical feedback from the grounding of electrical equipment to water mains, connect to the water mains using a dielectric coupling.

Personal Protection

Be sure to use all personal protective equipment, such as sturdy safety glasses, work shoes, hearing protection, and gloves, whenever necessary, to ensure your own safety.

To avoid eye injury, always wear protective glasses with side shields when using power tools. Also, make sure no one else can be injured by flying particles when using power tools.

To prevent possible damage to your hearing, always wear ear protection, such as earmuffs or earplugs, when using power tools.

Wear protective gloves during installation to protect against sharp edges from sheet metal components.

Tripping Hazard

Personal injury can result from tripping over power cords, tools, or other installation items. DO NOT leave items laying around the work area.

Cutting Hazard

The installation of this product may require using power tools.
Keep hands away from the cutting edge of any tool used in the installation of our product. Placing fingers in or around the cutting blades could result in serious personal injury.

Use Proper Tools
Always use proper tools which are in good working condition during the installation of the product. Using tools other than those listed could adversely affect the product and could result in property damage.

Failure to follow these instructions could result in personal injuries, water damage, and other damage to floors, pipes, walls, and other portions of your building or home.

1.5 Property Damage

Inspect Before Cutting
Make sure no electrical wiring or plumbing is present before cutting into a wall.

2. General Information

2.1 Installation / Use & Care

Read all instructions carefully before starting the installation and familiarize yourself with the various parts of this product.

This manual contains installation, Use & Care instructions for the EDFPBM117WS series bottle filler units. Followed carefully, these instructions will result in trouble-free installation of this Elkay Manufacturing Company (Elkay) product.

Any deviations, additions, and/or deletions from the described methods, without prior written approval of Elkay, will void the warranty covering this product.

Make sure the installation and use of this product meets all local, state, and federal plumbing and electrical codes.

Unit must be installed properly by trained service person.

2.2 Disclaimer

The information contained in this Installation / Use & Care Manual is given free of charge. It is based upon technical data which we believe to be reliable and is intended for use by persons having knowledge of this technical area at their own discretion and risk. Elkay assumes no responsibility for results obtained or damage incurred from the use of this material either in whole or in part by the buyer.

2.3 Serial Number Location

Please use the serial number located on the Fountain Unit when contacting us with questions concerning the installation of this product.

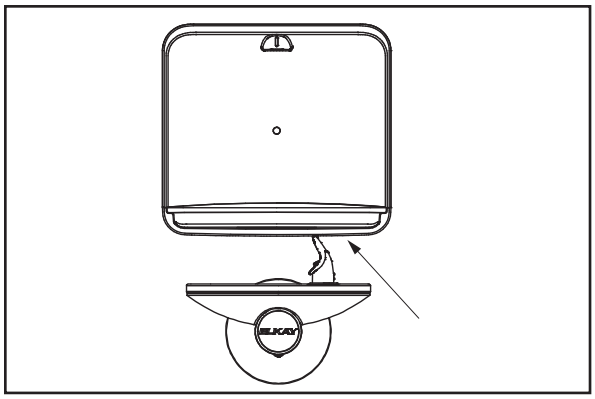

2.4 Contact Information

General Information
Elkay Manufacturing Company
1333 Butterfield Road, Suite 200
Downers Grove, IL 60515

Phone: 630.574.8484
Email: consumer@elkay.com
Website: http://www.elkay.com

USA/Canada Customer Care
Phone: 800.476.4106
Email: CustCare@Elkay.com

International Customer Care
Phone: 630.575.4755
Email: IntlCare@Elkay.com

Installation Services
Phone: 800.952.8064
Email: installservice@elkay.com
Website: http://www.elkay.com/contact-us/install

2.5 Notice of Changes

The information, specifications, and illustrations in this manual are based on the information that was available at the time this material was written and can change at any time. In keeping with our policy of continuing product improvement, Elkay reserves the right to change specification without notice.

All dimensions are given in inches (") and millimeters (mm).

2.6 Warranty

This product is covered by a Limited Warranty and Elkay will not be held responsible for damage of any kind in connection with the installation of the product.

Refer to the Elkay website http://www.elkay.com

3. Installation Preparation - Read Before Beginning Installation

For correct and safe installation, please read these instructions completely.

The grounding of electrical equipment such as telephone, computers, etc., to water lines is a common procedure. This grounding may be in the building, or may occur away from the building. This grounding can cause electrical feedback into a water chiller, creating an electrolysis which causes a metallic taste or an increase in the metal content of the water. This condition is avoidable by using the proper materials. Drain fittings which are provided by the installer should be plastic to electrically isolate the chiller from the building plumbing system.

NOTICE **Warranty is void if installation is not made in accordance with current instructions.**

- Hose sets are not to be used for connecting to water mains.
- Always shut off the valve at the installation/ service area to reduce risk of water damage.
- Thoroughly flush all water lines and fittings of all foreign matter before connecting to chiller.
- If inlet pressure is above 105 psig (0.73 MPa), a pressure regulator must be installed in water supply line. Any damage caused by the water pressure outside its rated pressure is not covered by warranty.

5. Ratings

5.1 EDFPBM117WS Series

Description	EDFPBM(R)117WS-FW1
Electrical	115VAC, 60Hz, (See nameplate for Amperage), 1 phase
Ambient Air Temp.	50-90 °F (10-32 °C)
Water Pressure	20-105 psig (0.14-0.73 MPa)
Maximum Water Temp.	90 °F (32 °C)
Refrigerant	HFC-R134a
Ingress Protection	IP20
Use	For Indoor Commercial Use only

4. Tools and Supplies

4.1 Tools Required

Tool	Used For
Phillips Screwdriver	Remove electrical box cover
Various Electrician's Hand Tools	Connecting power source to the unit's wiring
Various Plumber's Hand Tools	Connecting unit's plumbing to the household water source and waste drain
3/32 Allen Wrench	Remove the front covers

4.2 Installer-Supplied Parts

Description	Qty.
1/4" (6.4mm) Socket Wrench or Flat Head Screwdriver	1
Water Shut-off Valve	1
Additional fasteners	—

4.3 Tools/Items required but not provided

Description	Qty.
Safety glasses	1
Protective gloves	1
Hex driver	1

6. Preparation

6.1 General Information

1. This product is designed for indoor use only and should not be installed outdoors or in a humid environment.
2. Use care when opening and removing the packaging to prevent damage to the product.
   a. Inspect the product for any shipping damage and report it immediately to the location of purchase. Installation of a damaged product will void the warranty.
   b. Confirm that all parts have been included for the proper installation of this product. Contact the location of purchase if damaged parts are found.

   NOTICE **Make sure no electrical wiring, potable water inlet pipes, or drain water outlet pipes will be damaged during installation of the product. Damage to any of these items can cause electrical damage, fire, and/or water damage.**
3. Shut off the water supply source and disconnect power to the electrical outlet being used to operate the product before starting installation.

7. Installation

1. Make water supply connections (Fig. 2). Install a shut-off valve and union connection to building water supply (valve and union not provided). Turn on water supply and flush the line thoroughly.
   Caution: DO NOT SOLDER tubes inserted into the strainer or filter head as damage to the o-rings may result.
2. Install mounting frame (instructions supplied with mounting frame.

Make Electrical Connection

3. For Bottle Filler - refer to mounting frame Installation Instructions.

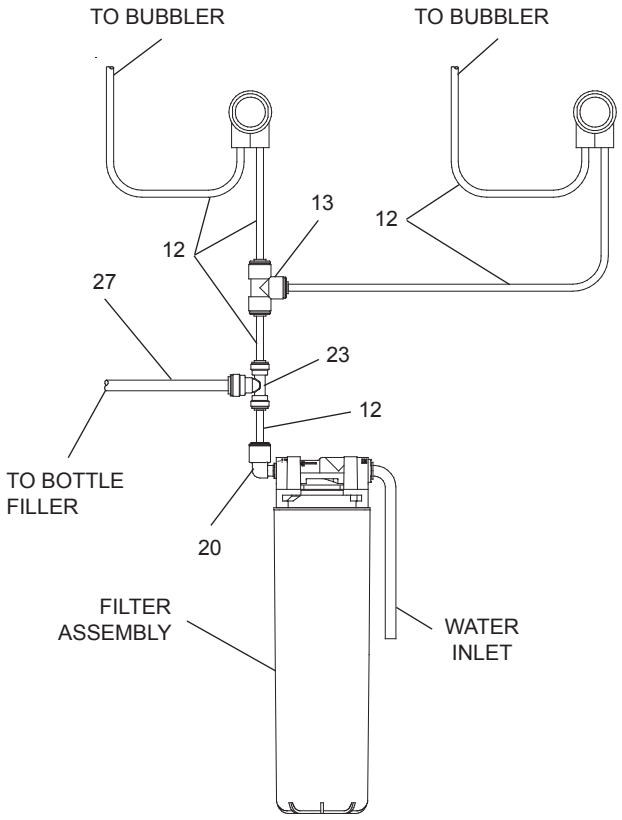

Figure 2 - LZWS-EDFPBM(R)117K-W1Tube Routing

Installing the Remote Filter

1. The filter is installed remotely, up to 15 feet away from the water dispenser.
2. Securely mount the filter head in the desired remote location within 15 feet of water dispenser. One recommendation is to install the filter head by screwing it into a stud on the back side of a wall.
   a. Remove the short 3/8" copper inlet water tube.
   b. Remove the NFC card.
   c. Remove the four screws that hold the bracket to the filter head.
   d. Screw the bracket to a wall stud, then reassemble the filter head, NFC card, and inlet water tube.

   Note: If desired, you can install the filter into the filter head now.

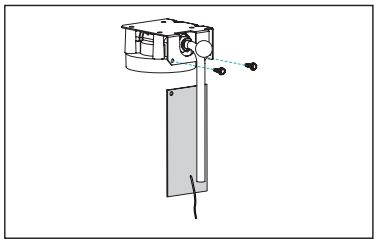

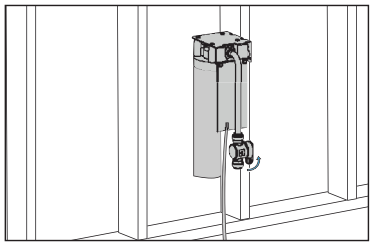

3. IInstall 1/4 x 1/4 x 3/8 Tee on the outlet of the filter close to the back of the fountain rough-in. Install supplied 4” poly tubing and armaflex to the outlet of the prevously installed tee. Connect supplied 1/4 x 1/4 x 1/4 tee to the 4" poly tubing.
4. With the back panel standing close to the frame, slide the 3/8” poly tube from the bottle filler and the filter extension wire through the opening in the frame. Plug the power cord from the bottle filler into pigtail plug in the frame.
5. Hang main panel on mounting frame hanger. Make sure the power cord, filter extension wire & poly tube do not get pinched between the panel & mounting frame. Ensure the panel engages at the top. Align fountain holes with mounting frame holes.

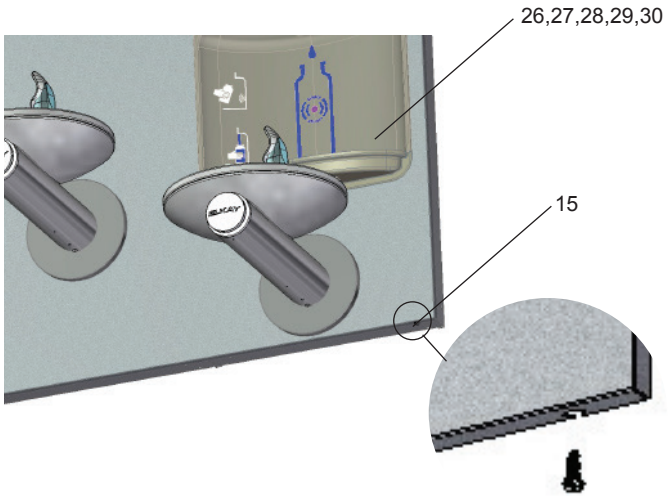

Figure 3 - Upper Panel Installation

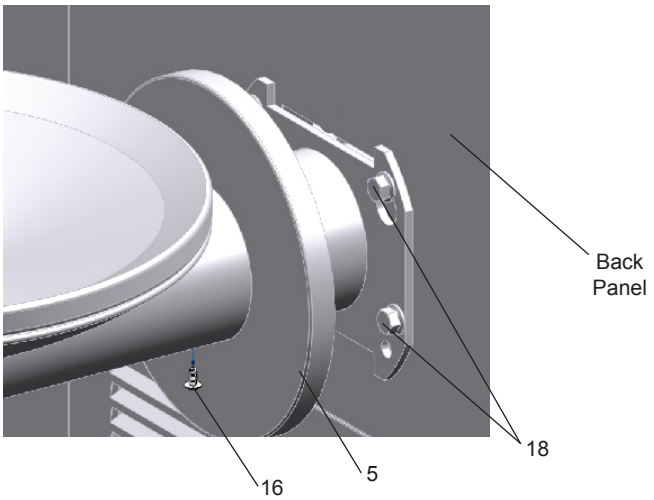

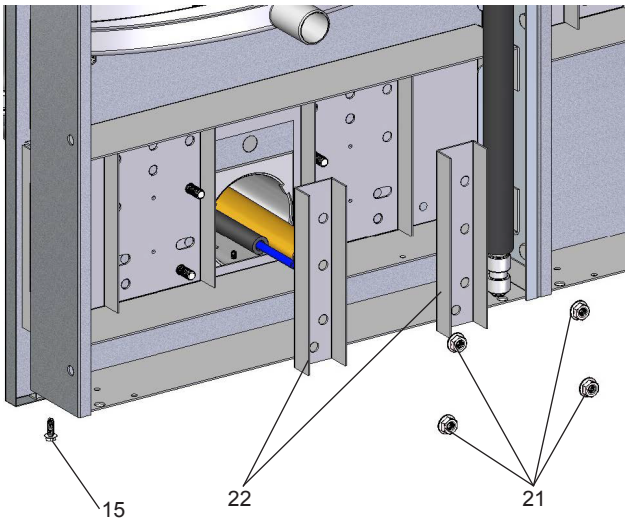

View From Rear

Figure 4 - Lower Panel Installation

6. Remove protective coating from main panel.
7. Install the small screws through the slotted holes on the bottom of the panel and tighten to the frame (Fig 4).
8. Install fountains with (8) 5/16-18 HHMS & (8) 5/16-18 nuts (provided) (Fig. 5). Connect the ¼" water lines from each fountain to the remaining openings on the tee (cut lines to fit as needed). Connect the 3/8 polytube from the bottle filler into the opening on the tee.
9. Attach waste tubes (1-1/4" O.D.) to 1-1/4" O.D. slip trap. Trap on the bottle filler side must be 1-1/2" O.D. (provided by others).
10. Plug the filter extension wire into the NFC board on the side of the filter head assembly.
11. These products are designed to operate on 20-105 PSI supply line pressure. If inlet pressure is above 105 PSI, a pressure regulator must be installed in the supply line.
    Caution: Any damage caused by connecting these products to a supply line with pressure lower than 20 PSI or higher than 105 PSI IS NOT covered under warranty.
12. Verify proper dispensing from the bottle filler by placing a cup, hand or any opaque object in front of sensor area and verify water dispenses.
    Note: the first initial dispenses might have air in the line which may cause a sputter. This will be eliminated once all air is purged from the line. A steady stream of water assures all air is removed. The sensor has a 20 second maximum ON time. It may be necessary to step away from the beam a few times to purge all air. Check for leaks.
13. Check stream height from bubbler. Stream height is factory set for 35 PSI supply. If supply pressure varies greatly from this, remove push button (Item 7 - Fig. 6) and adjust the screw on the regulator (Item 8 - Fig. 6). To remove push button, remove setscrew from bottom of sleeve (Item 19). Insert a small punch in screw hole and push up while grasping the push button and pull forward removing the push button. Clock wise adjustment will raise stream height and counterclockwise movement will lower stream height. For best adjustment stream should hit basin approximately 6-1/2" from the bubbler. Reassemble the push button by pushing in on button until the push button catches in the sleeve. Reinstall the set-screw (Item 19) in the sleeve (Item 6).
14. Install the cover plates.
15. Optional: Mount optional panels. Slide tongue of panel under edge of already installed panel. Tighten screws.

8. Service

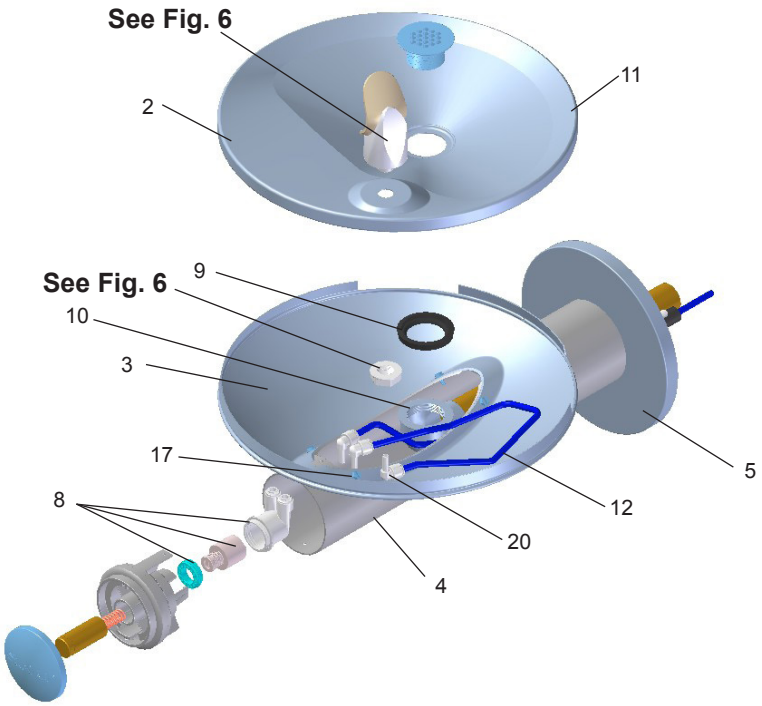

Figure 5 - Fountain Body Assembly

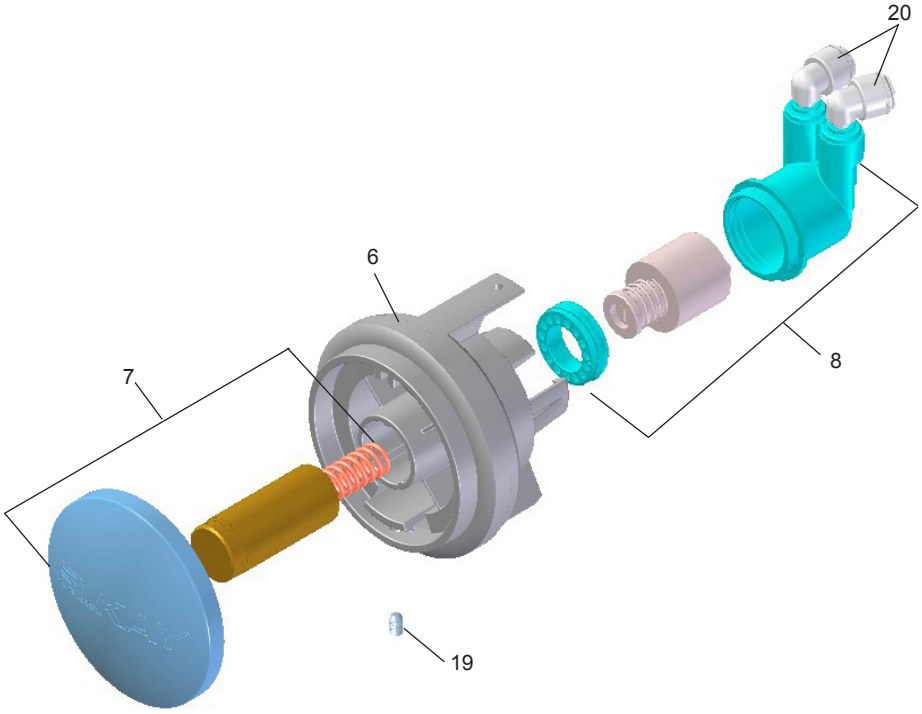

Figure 6 - Push Button Assembly

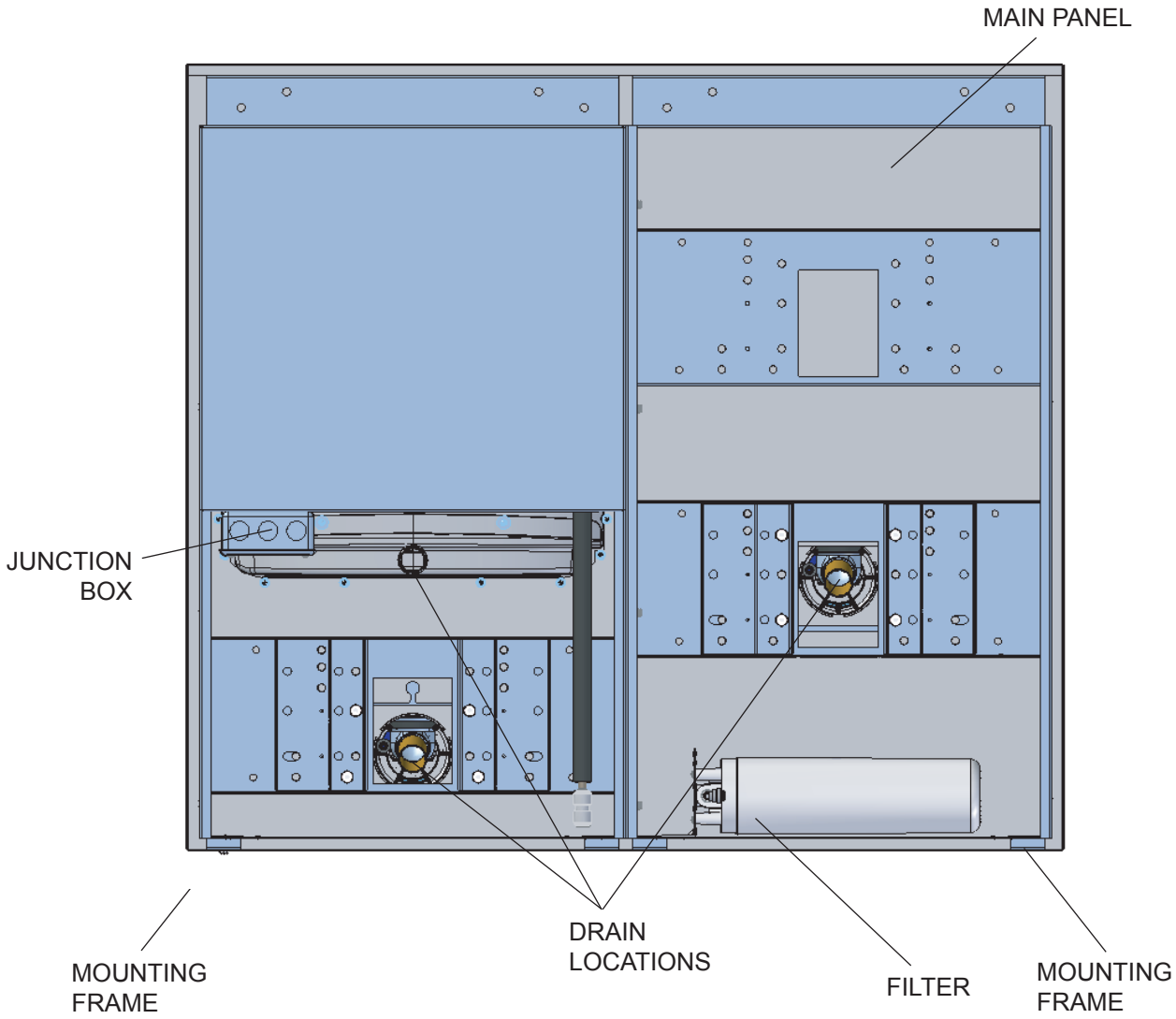

Figure 7

NOTE: For reverse configurations the frames will be opposite

⚠ WARNING

- **INGESTION HAZARD:** This product contains a button cell or coin battery.
- **DEATH** or serious injury can occur if ingested.
- A swallowed button cell or coin battery can cause **Internal Chemical Burns** in as little as **2 hours.**
- **KEEP** new and used batteries **OUT OF REACH of CHILDREN**
- **Seek immediate medical attention** if a battery is suspected to be swallowed or inserted inside any part of the body.

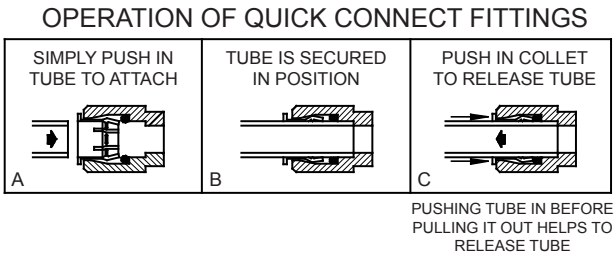

Figure 8 – Quick Connect Fittings

Actuation of Quick Connect Water Fittings: Cooler is provided with lead-free connectors which utilize an o-ring water seal. To remove tubing from the fitting, relieve water pressure, push in on the gray collar while pulling on the tubing. (See Fig. 8) To insert tubing, push tube straight into fitting until it reaches a positive stop (approximately 3/4").

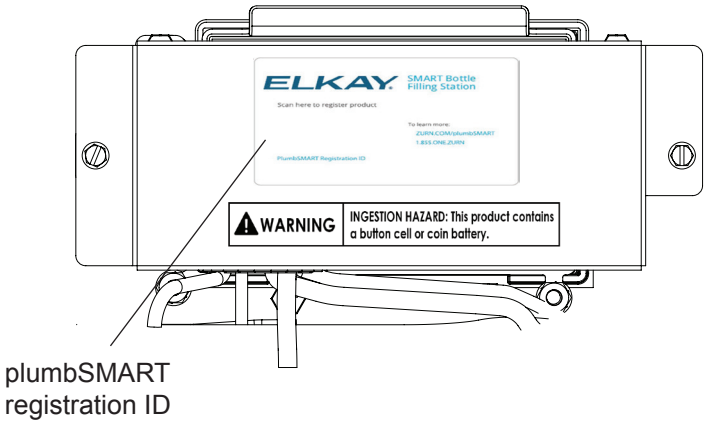

Figure 9 – plumbSMART Registration Label

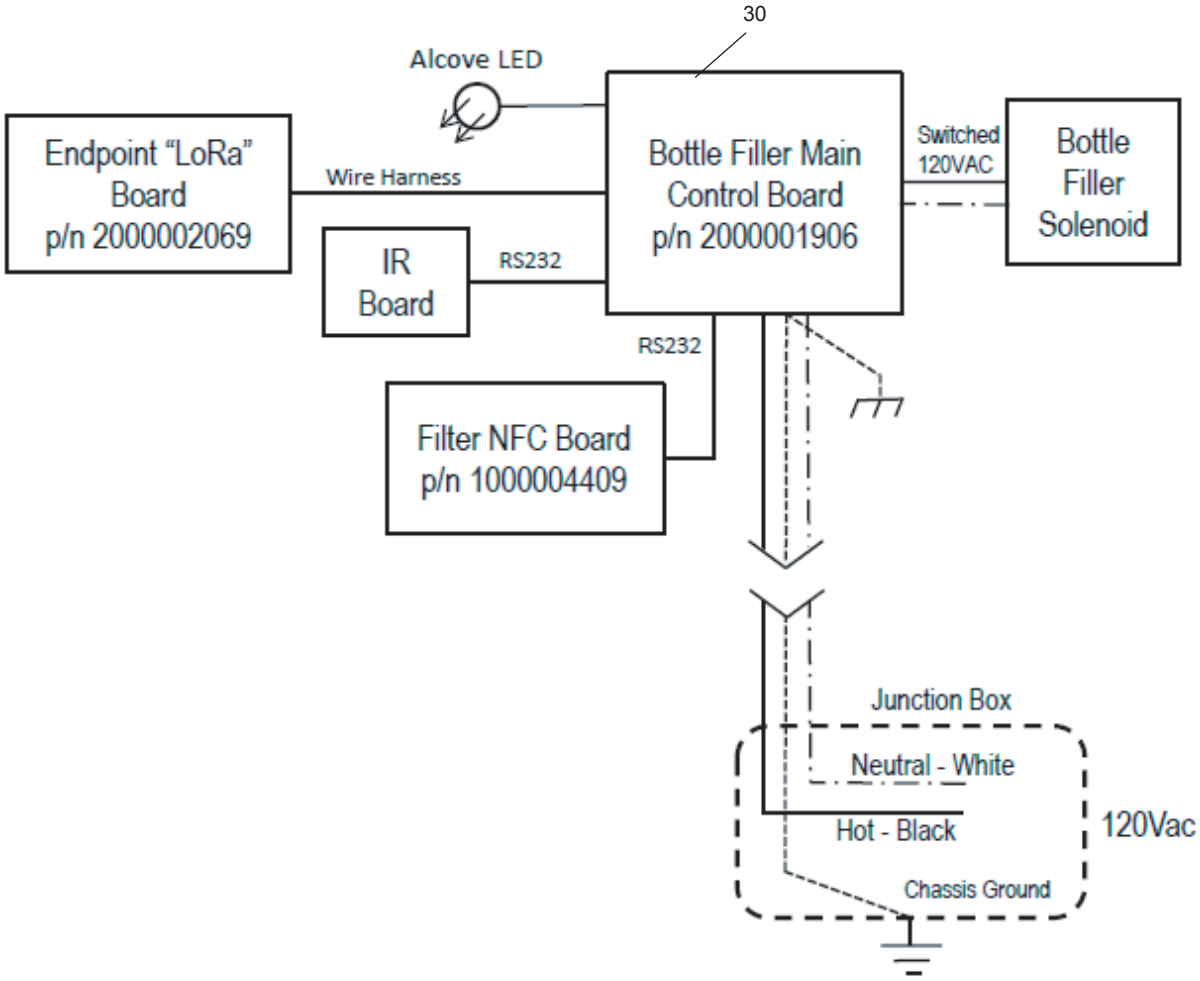

Figure 10 – Electrical Diagram

Front of Filter **Back of Filter**

Fig. 11

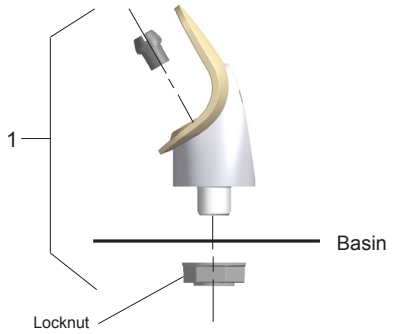

BUBBLER DETAIL

Fig. 12

NOTE:
When installing replacement bubbler and pedestal, tighten nut only to hold parts snug in position. Do Not Overtighten.

Fig. 13

NOTE:
The filter status indicator shows the filter condition using colors. Blue indicates normal operation, no immediate attention needed. Red indicates immediate attention required to maintain proper function.

Scan for trouble shooting and to sign up for auto replenishment of authentic Elkay filters.

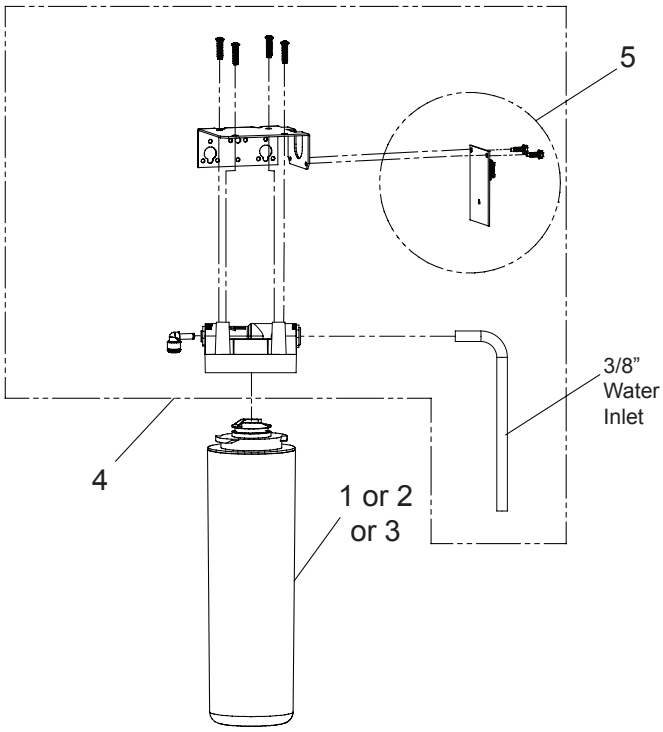

Fig. 14

WATERSENTRY® Filter Detail

WATERSENTRY® FILTER PARTS LIST		
ITEM NO.	PART NO.	DESCRIPTION
1	51300C	Filter 3000 Gal (standard)
2	51600C	Filter 6000 Gal (high capacity)
3	71300C	Filter 2250 Gal (PFOA/PFOS)
4	1000005214	Kit - Filter Head Fittings includes John Guest Fittings & 3/8” Elbow Filter Bracket/Screws
5	1000005395	Kit - NFC Board/Cover

PARTS LIST		
ITEM NO.	PART NO.	DESCRIPTION
1	56073C	Kit - Bubbler Assy
2	28708C	Basin - Swirlflow
3	28473C	Lower Shell
4	45767C	Fountain Body
5	28343C	Cover Plate
6	45781C	Sleeve
7	98871C	Kit - Swirlflo Pushbutton/Spring
8	98530C	Kit - Regulator/Spring/Nut
9	56163C	Gasket - Drain
10	0000000930	Assy - Drain/Tailpipe
11	45768C	Drain - Plug 1-1/2”
12	56092C	Poly Tubing (Cut To Length)
13	1000001994	Kit - Tee 1/4 (3 Pack)
14	55996C	Strainer
15	111008343890	Screw - #10-24 x .62 HHSM
16	70432C	Screw - #8-32 x .38 THSM
17	38417001	Screw - #8-18 x .37 HHSM
18	75560C	Screw - 5/16-18 x 1.00 HHMS
19	75632C	Setscrew - #10-32 x .38
20	1000001772	Kit - 70817C Elbow 1/4x1/4 (3 Pack)
21	111577343890	Nut - Hex 5/16-18
22	28395C	Bracket - Support
23	1000002062	Kit - Tee 1/4 x 1/4 x 3/8 (3 Pack)
24	62223C	Copper Tube - 3/8” Cut to Length
25	70852C	Tee - 3/8"

BOTTLE FILLER REPLACEMENT PART KITS		
ITEM NO.	PART NO.	DESCRIPTION
26	98546C	Kit - Aerator Replacement
27	98549C	Kit - Hardware & Waterway (BF)
28	2000000503	Kit - Solenoid 120V (BF)
29	1000005219	Kit - IR Sensor K+
30	2000001906	Kit - Connected Ready LED Board (BBB/R)

Installation Package

The components for installation are packed in two separate boxes, regardless of the type of unit being installed. The boxes contain the following:

Box No. 1: Wall Frame(s)
Box No. 2: Remote Chiller, ECH8
Box No. 3: Fountain(s), Arm(s) and Panels

Additional materials, as noted in the Parts List, are also shipped in these boxes.

TROUBLESHOOTING & MAINTENANCE

Orifice Assembly: Mineral deposits on orifice can cause water flow to spurt or not regulate. Mineral deposits may be removed from the orifice by poking with a small round file not over 1/8” diameter, or using a small diameter wire.

CAUTION: DO NOT file or cut orifice material

Stream Regulator: If orifice is clean, regulate flow as in Step 14 of the installation instructions. If replacement is necessary, see parts list for correct regulator part number.

LIMITED PRODUCT WARRANTY
SOFTWARE LICENSE

FIRST YEAR - The Manufacturer warrants every cooler, bottle filling station, packaged water cooler, fountain and accessory to be free from defects in materials and workmanship under normal use for one (1) year from date of install or eighteen (18) months from date of shipment from factory, whichever occurs first. The Manufacturer warrants every LK44 Series outdoor tubular fountain and bottle filling station to be free from defects in materials and workmanship under normal use for five (5) years from the date of install or sixty-six (66) months from date of shipment from factory, whichever occurs first. This extended warranty does not apply to freeze resistant assemblies.

SECOND THROUGH FIFTH YEARS - The Manufacturer warrants the compressor and hermetically sealed refrigeration system, including cooling coils or tank assembly when part of the hermetically sealed refrigeration system, to be free from defects in material and workmanship under normal use for an additional four (4) years from the end of the one (1) year period described above. Packaged water cooler are not subject to the additional four (4) year warranty when used in chilled water commercial/industrial applications other than for potable water.

INSTALLATION AND OPERATION - The foregoing Limited Warranty applies only when the product is installed and operated in accordance with the Manufacturer's written instructions included with each unit. These products are designed to operate on 20 psi to 105 psi supply line pressure. Non-filtered Bi-level units require a minimum of 40 psi supply line pressure to ensure adequate stream height from each bubbler when activated simultaneously. Bi-level filtered models, regardless of supply line pressure, cannot provide adequate stream height from each bubbler when activated simultaneously. The Limited Warranty does not apply to products, which on examination by the Manufacturer or its agent, are found to have been subjected to accident, alteration, abuse, misuse, misapplications, corrosive type atmospheres, or abnormal use.

OWNER'S OBLIGATIONS - It is the owner's obligation to pay for any repairs or maintenance not covered by the Limited Warranty, including service calls related to non warranty issues. Any appearance imperfections are to be noted at time of installation, and the installer or the supplier notified without delay. In the case of products located within the United States or Canada, it is the owner's responsibility to allow access to the unit for the authorized service center to repair on site and/or remove unit from wall to repair at the authorized service center's discretion. In the case of products located outside the United States or Canada, the owner is to return any part for which replacement is sought to the closest authorized service center or to the manufacturer's factory repair department.

MANUFACTURER'S OBLIGATIONS - When the product is located within the United States or Canada, the Manufacturer's obligation under this Limited Warranty is limited to the labor and parts to repair or replace any part which is expressly covered by this Limited Warranty at one of its authorized service centers or at its factory repair department. The warranty applicable to any replacement unit shall be the remaining warranty period on the replaced unit. The Manufacturer's obligation also includes cost of outbound freight (but not express freight) of the part or parts from an authorized service center or the factory repair department, but only if the Manufacturer determines that the part or parts, and the purported defect or defects, are covered by this Limited Warranty.

When the product is located outside the United States or Canada, the Manufacturer's obligation under this Limited Warranty is limited to providing a replacement part for any part expressly covered by this Limited Warranty which, upon examination by the Manufacturer or its agent, is found to be defective, but does not include any obligation to provide labor or to pay labor costs incurred in connection with the replacement. The Manufacturer's obligations also include cost of outbound freight (but not express freight) of the part or parts from the factory repair department to (but not beyond) the port in the United States from which the part or parts are shipped to the ultimate destination, but only if the Manufacturer determines that the part or parts, and the purported defect or defects, are covered by this Limited Warranty.

WHAT WARRANTY DOES NOT COVER - This Limited Warranty does not include payment for any field labor to provide for normal maintenance including adjustments such as water stream height, water temperature or electric eye sensitivity. The water system and regulating valve are not covered by this Limited Warranty if they become inoperative due to liming, sand or similar residue. This Limited Warranty is voided if repairs are made by an unauthorized party or the serial number data plate is removed or defaced. Normal deterioration of finish due to use and exposure is not covered by this Limited Warranty. Corrosion of materials is also not covered by this Limited Warranty. The Manufacturer is not liable for repairs, whether cosmetic or structural, to walls where cooler, bottle filler, fountain and packaged water coolers are built into the wall. If inlet pressure is above 105 psi, a pressure regulator must be installed in the supply line. Any damage caused by reason of connecting this water cooler, bottle filler, fountain or packaged water cooler to supply line pressures lower than 20 psi or higher than 105 psi is not covered by this warranty.

PERSONS ENTITLED TO BENEFIT OF WARRANTY - This Limited Warranty is applicable only to (i) purchasers who purchase the product for the resale in the ordinary course of business, and (ii) the first person who purchases the product other than resale.

SOFTWARE LICENSE PROVISIONS - To the extent the product includes embedded software, the owner and those using the product are granted a restricted, nonexclusive license to use such embedded software. Title to the embedded software shall at times remain with the embedded software licensor. The owner and those using the product shall not remove or alter notices, legends or trademarks contained in the embedded software, nor shall they translate, reverse engineer, decompile or disassemble the embedded software except to the extent applicable law specifically prohibits this restriction. The embedded software is provided "as is" and any warranty offered herein is by or through the Manufacturer. Further information concerning this license of embedded software is available from the Manufacturer.

THIS LIMITED WARRANTY IS IN LIEU OF ALL OTHER EXPRESS WARRANTIES, EXPRESSED OR IMPLIED, ARISING BY LAW OR OTHERWISE, INCLUDING WITHOUT LIMITATION, THE IMPLIED WARRANTIES OF MERCHANTABILITY AND FITNESS FOR A PARTICULAR PURPOSE. EXCEPT AS EXPRESSLY PROVIDED HEREIN, THE MANUFACTURER MAKES NO WARRANTIES, EXPRESSED OR IMPLIED, ARISING BY LAW OR OTHERWISE, INCLUDING WITHOUT LIMITATION, THE IMPLIED WARRANTIES OF MERCHANTABILITY AND FITNESS FOR A PARTICULAR PURPOSE, TO ANY PERSON. THIS WARRANTY MAY NOT BE ALTERED, VARIED, OR EXTENDED, EXCEPT BY A WRITTEN INSTRUMENT EXECUTED BY THE MANUFACTURER. THE REMEDY OF REPAIR OR, WHERE APPLICABLE, REPLACEMENT AS PROVIDED UNDER THIS LIMITED WARRANTY IS EXCLUSIVE. IN NO EVENT SHALL THE MANUFACTURER BE LIABLE FOR ANY CONSEQUENTIAL OR INCIDENTAL DAMAGES TO ANY PERSON, WHETHER OR NOT OCCASIONED BY NEGLIGENCE OF THE MANUFACTURER, INCLUDING WITHOUT LIMITATION DAMAGES FOR LOSS OF USE, COSTS OR SUBSTITUTION, PROPERTY DAMAGE, OR OTHER MONETARY LOSS.

This Limited Warranty gives specific legal rights and in some states of the United States there may be other rights which vary from state to state.

DATE OF INSTALLATION _____

SERIAL NUMBER _____
(To Be Filled in By Installer)

Form to be left with the owner by the installer.

FCC COMPLIANCE STATEMENT

CAUTION: Changes or modifications not expressly approved by Elkay Manuafacturing Company could void your authority to use this equipment
This device complies with Part 15 of the FCC Rules. Operation to the following two conditions: (1) This device may not cause harmful interference, and (2) this device must accept any interference received, including interference that may cause undesired operation

Note: This equipment has been tested and found to comply with the limits for a Class B digital device, pursuant to part 15 of the FCC Rules. These limits are designed to provide reasonable protection against harmful interference in a residential installation. This equipment generates, uses and can radiate radio frequency energy and, if not installed and used in accordance with the instructions, may cause harmful interference to radio communications. However, there is no guarantee that interference will not occur in a particular installation. If this equipment does cause harmful interference to radio or television reception, which can be determined by turning the equipment off and on, the user is encouraged to try to correct the interference by one or more of the following measures:

—Reorient or relocate the receiving antenna.

—Increase the separation between the equipment and receiver.

—Connect the equipment into an outlet on a circuit different from that to which the receiver is connected.

—Consult the dealer or an experienced radio/TV technician for help.

The device shall be used in such a manner that the potential for human contact normal operation is minimized. This equipment complies with FCC radiation exposure limits set forth for an uncontrolled environment. This equipment should be installed and operated with a minimum distance of 20cm between the radiator and your body. This device and its antenna(s) must not be co-located or operating in conjunction with any other antenna or transmitter.

2000002586

PRINTED IN U.S.A.

FOR PARTS, CONTACT YOUR LOCAL DISTRIBUTOR OR CALL 1.800.834.4816
REPAIR SERVICE INFORMATION TOLL FREE NUMBER 1.800.260.6640
ELKAY MANUFACTURING CO. • 1333 BUTTERFIELD ROAD SUITE 200 • DOWNERS GROVE • IL 60515 • USA 630.574.8484 • www.elkay.com