CERTIFIED QUALITY SYSTEM
ISO9001:2008

100% MADE IN ITALY

RIELLO ELETTRONICA

AVS electronics

ANNI YEARS 3 GARANZIA WARRANTY

Curtarolo (Padova) Italy
www.avselectronics.com

E N G

DIGITAL MICROWAVE BEAMS FOR INDOOR AND OUTDOOR USE

BM 60 HP
BM 120 HP
BM 200 HP

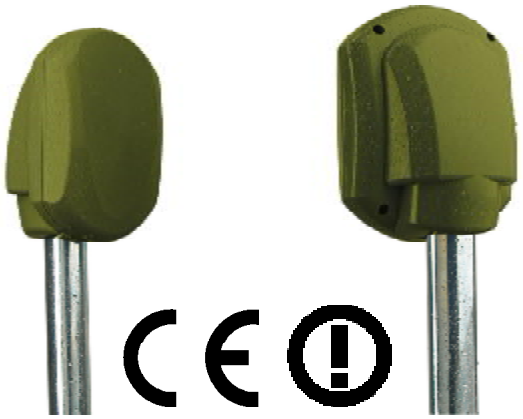

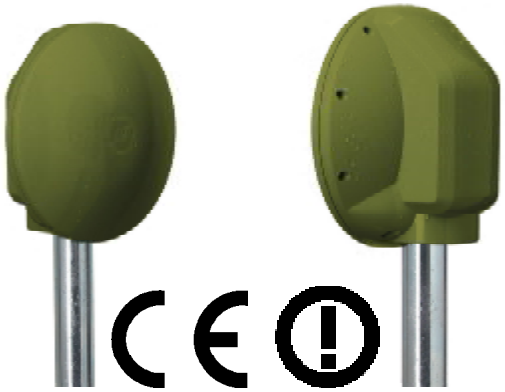

BM 60 HP VAC
BM 120 HP VAC
BM 200 HP VAC

IST0772V2.2

General Description ..... pag. 37
Transmitter ..... pag. 37
BM60HP - BM120HP - BM200HP Wiring systems receiver ..... pag. 38
AUX Input ..... pag. 38
Extra power supply unit for BM 60-120-200 HPVAC ..... pag. 39
DIP SWITCH - SW1 ..... pag. 41
Serial addresses table - SW1 ..... pag. 41
DIP SWITCH - SW2 ..... pag. 41
Frequencies Table - SW2 ..... pag. 41
Description of working ..... pag. 42
Positioning of the beams ..... pag. 43
Advice for installation ..... pag. 49
Transmitter installation inside the wire system ..... pag. 50
Receiver installation inside the wire system - UNIVERSAL ..... pag. 50
Receiver installation inside the wire system - SERIAL ..... pag. 50
Adjustments ..... pag. 51
Measurements of the signal by oscilloscope ..... pag. 52
Sensitivity Adjustment ..... pag. 53
Kit TERM (optional) Resistence fo inside heating ..... pag. 54
Kit AMP (optional) Anti-removal ..... pag. 54
Disqualification (Important warning) ..... pag. 55
Optional Brackets ..... pag. 56
Special functions ..... pag. 57
Detectors Management ..... pag. 58
Synoptic panel ..... pag. 62
Events History ..... pag. 63
Signals library ..... pag. 65
Recordings Archive ..... pag. 66
System notes ..... pag. 66
Upgrade Firmware ..... pag. 66
Information in conformity to the Directive 1999/5/CEE for model BM_HP ..... pag. 67
Technical Characteristics ..... pag. 68

ENG

DIGITAL MICROWAVE BARRIER

The **BM60HP, BM120HP and BM200HP and BM 60-120-200 HPVAC** models are microwave intrusion detection systems which functioning is based on the “field interruption” principle and, also thanks to **a microprocessor managing the digital signals**, they are instruments ideal for the protection of large surfaces, indoor and outdoor, allowing for a high degree of safety.
Models **BM 60-120-200 HPVAC** are supplied on large containers and are equipped with a 230 V ~ 1A power supply unit and a 12 V - 0.8 Ah buffer battery (optional).

General Description

The system is made by a Transmitter and a Receiver **which must be installed as a couple, choosing the same working frequency among the 5 available, in both units (tx and rx)** , through SW1 (4 dip-switch module) on board.

Compatibility with existing models

In case of replacement, choose the same frequency on the beam to be replaced (F1 by F1, F3 by F3 etc.). In order to identify the corresponding frequency, use the chart “BEAMS CHANNELS”

Filter of selection and compensation

Any receiver is equipped with a selection filter choosing only the frequency of its channel and rejecting the others, thus not making possible the elusion of the beam in case of use of a false transmitter. Special self-adjusting and signal-elaboration circuits have been used in the receiver for automatic compensation of temperature variations.

Detection Area

The shape of the irradiation area is very well defined and this allows a higher possibility of detection and a reduction of false alarms risk.
These beams are manufactured exclusively with solid-state components and are tropicalyzed in order to obtain a very good seal against weather conditions.

Transmitter

The transmitter is made of a planar microwave emitting a narrow and directional higly-stable low power beam.
A 4-dip-switch for setting working frequency is on board.
Check that the transmitter working frequency set is the same as in the receiver coupled

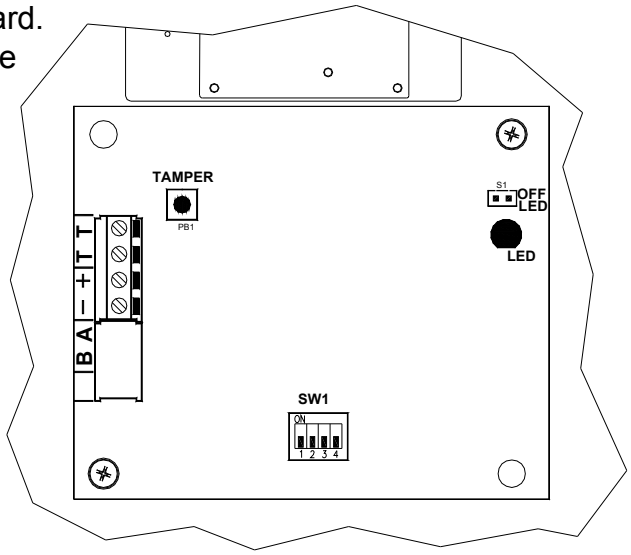

BM M CHANNELS	DIP 1	DIP 2	DIP 3	DIP 4	BM Q PLUS CHANNELS
F1	ON	OFF	OFF	OFF	**GOLD**
F2	OFF	ON	OFF	OFF	**BLUE**
F3	OFF	OFF	ON	OFF	**SILVER**
F4	OFF	OFF	OFF	ON	**YELLOW**
F5	OFF	OFF	OFF	OFF	**-**

-		supplying negative 12 V ⎓
+		supplying positive 12 V ⎓
T T		n.c. output for protection agaist detector opening
S1	closed open	supplying Led enabled supplying Led disabled

E
N
G

BM60HP - BM120HP - BM200HP Wiring systems receiver

The Receiver is made of a high sensitivity electronic circuit coupled with the antenna; it captivates the signal transmitted on its own channel and measures its intensity. Special signal processing techniques enable compensating the variations of the surrounding environment and minimising the effect of any disturbances produced by small animals or birds.animals or birds.
The electronic board contains two consoles with 8 dip-switches; the first 4 dips, of console SW2, are for the setting of the work frequency.

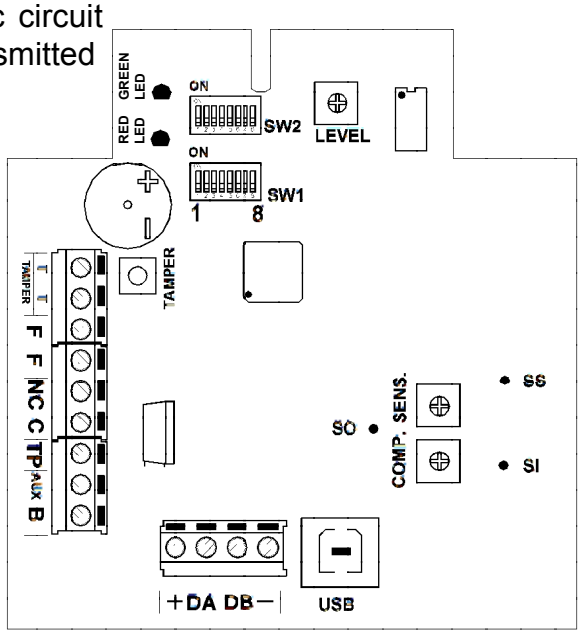

Check that the working frequency of the receiver is the same as set in the transmitter coupled.

Terminal board

-	negative power supply 12 V
DA-DB	serial port for serial connection in RS485
+	positive power supply 12 V
T T	output normally closed for protection against detector opening
F F	Disqualification signal relay; normally closed during the quiet status. This relay opens in case the signal from the Transmitter is not received for 30 seconds.
C / NC	alarm relay exchange normally closed
TP	Test Point positive output for the displaying of the received signal
AUX	NC input for the connection of an outdoor detector
B	positive input: 12 V for stand-by; giving a positive to this clamp, the alarm relay locks in quiet status

Trimmer

LEVEL	trimmer for the adjustment of the received signal
SENS.	trimmer for the sensitivity adjustment; increases by turning clockwise
COMP.	trimmer for the compensation adjustment; increases by turning anti-clockwise

Connection

USB	USB connector for PC and programming software connections

AUX Input

The AUX input allows detecting the opening or not of an auxiliary detector connected to this clamp. This input is not balanced, but is normally closed with negative reference.

CONNECTION EXAMPLE

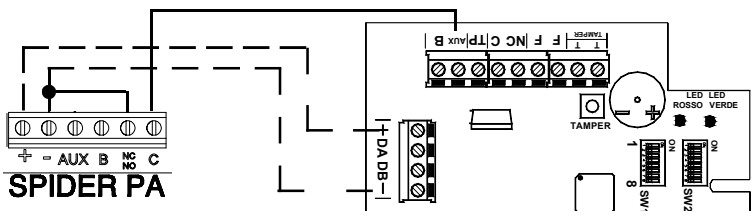

Extra power supply unit for BM 60-120-200 HPVAC

Tropicalised power supply unit

The power supply unit is a 15W switch with an output voltage of 13.8V and a maximum current of 1 A.

Mains power supply	100-240V~ (+/-10%) 50/60Hz	
Voltage	Rated supply voltage	13,8 V⎓
Max. current absorbed from the mains	115V~ 230V~	100 mA
Maximum current available	Power supply unit	1A
Output voltage at 110-230V - 10%	empty With maximum load	13,8 V⎓ 13,6 V⎓
Output voltage at 110-230V + 10%	empty With maximum load	13,8 V⎓ 13,6 V⎓

ACCESSORIES SUPPLIED		
Clips		**2**
Cable locking clips	4.5 mm wide - 120 mm long	**2**
Wire locking clips	2.5 mm wide - 98 mm long	**2**
Battery fastening	7.5 mm wide - 250 mm long	**1**
Clip screws	ø 4.2 - 6.5 mm long	**2**
Power supply unit screws	M3 x 4	**2**
Buffer battery connection wire	with F 1 Amp L250V fuse	**1**

Installation

Both in the receiver and the transmitter, the power supply unit must be fastened to the protective cover of the electronic board:

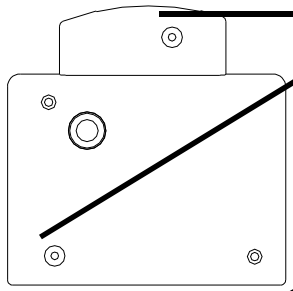

Fasten the two clips supplied to the two turrets, with the Ø 4.2 x 6.5 mm self-threading screws supplied.

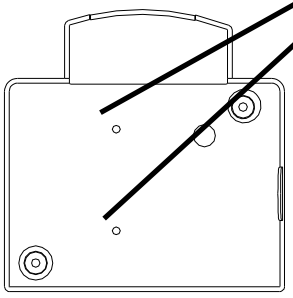

Using the marks on the inside of the cover, make two 3 mm holes to fasten the power supply unit in place.

Fasten the power supply unit in place using the two M3 x 4 screws supplied

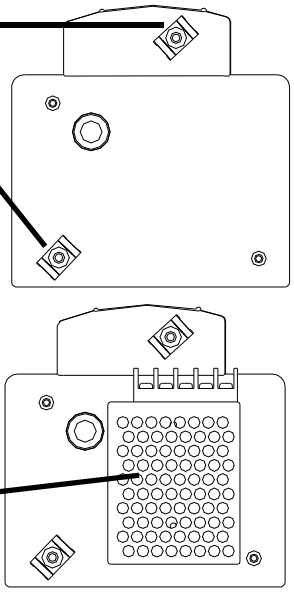

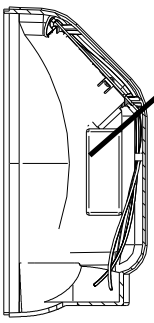

The 12 V 0.8 Ah Y08A12 buffer battery (optional) (article code 1143118) (to be fastened in place using the clip supplied) is housed on the lower part of the back cover of the barrier, which must never exceed the dimensions of 65 mm high, 96 mm wide and 25 mm deep.
To connect the Y08A12 battery, use the wire supplied, with the protective fuse F 1A L250V and the connector for release if the cover comes open. If you use a different battery with the same characteristics, it is necessary to eliminate the connector in order to connect it to the power supply unit in the most appropriate way.

E N G

External connections

The power supply unit must be connected as follows:

(1) V+
(2) V-
(3) Earth
(4) Neutral 220V ~ N
(5) Live 220V ~ F

To be connected to the entrance of the TX and RX board, respecting the polarities

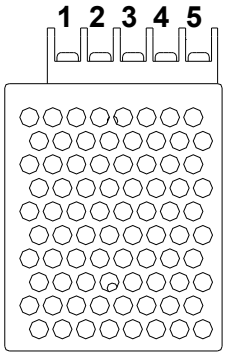

Insert an omnipolar network switch in the electric installation of the building. Connect the input of the mains voltage to the terminals marked L N (AC) and the + and the - of the barrier board to those marked V+ e V- respectively.

The input for the mains power supply must be connected with double insulation wires

To guarantee electric safety, the wires must be fastened in place using the clip directly on the protective sheath

Fasten the sheath of the wires in the set points, using the bigger clips supplied.

Wire clip
(use the two small ones supplied)

Power supply 12 V board

Power supply 220 V ~ main

The 3 wires for the 230 V ~ mains power supply and the 2 wires for the 13.8 V power supply must fastened securely together with their own clip (as shown in the figure) to stop them coming into contact with sensitive parts of he barrier if they come loose from the terminal.

Signals to the central control unit
In the case of serial connections, in addition to the DA and DB clips, it is necessary to connect the power supply negative from the power supply unit to the central control unit, and we recommend the use of 0.5mm² section sheathed wires.

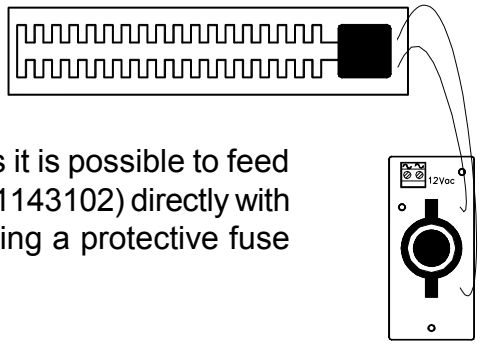

In the BM 60 - 120 and 200 HPVAC barriers it is possible to feed the TERM 1 module (Optional) (Article code 1143102) directly with the power supply unit on the barrier, inserting a protective fuse F500mAL250V.

ENG

DIP SWITCH - SW1

DIP	Associated function
1 .. 5	Selection serial addresses of the barrier - see addresses table
6	ON - Compensation activated OFF - Compensation deactivated
7	ON - enables recording of the events even with lock engaged (B) OFF - events recording disabled with lock engaged(B)
8	ON -Active AUX input, the barrier reads the input OFF - Excluded AUX input, the barrier does not consider the input

Serial addresses table - SW1

Detector	DIP1	DIP2	DIP3	DIP4	DIP5	Detector	DIP1	DIP2	DIP3	DIP4	DIP5
1	ON	ON	ON	ON	ON	17	ON	ON	ON	ON	OFF
2	OFF	ON	ON	ON	ON	18	OFF	ON	ON	ON	OFF
3	ON	OFF	ON	ON	ON	19	ON	OFF	ON	ON	OFF
4	OFF	OFF	ON	ON	ON	20	OFF	OFF	ON	ON	OFF
5	ON	ON	OFF	ON	ON	21	ON	ON	OFF	ON	OFF
6	OFF	ON	OFF	ON	ON	22	OFF	ON	OFF	ON	OFF
7	ON	OFF	OFF	ON	ON	23	ON	OFF	OFF	ON	OFF
8	OFF	OFF	OFF	ON	ON	24	OFF	OFF	OFF	ON	OFF
9	ON	ON	ON	OFF	ON	25	ON	ON	ON	OFF	OFF
10	OFF	ON	ON	OFF	ON	26	OFF	ON	ON	OFF	OFF
11	ON	OFF	ON	OFF	ON	27	ON	OFF	ON	OFF	OFF
12	OFF	OFF	ON	OFF	ON	28	OFF	OFF	ON	OFF	OFF
13	ON	ON	OFF	OFF	ON	29	ON	ON	OFF	OFF	OFF
14	OFF	ON	OFF	OFF	ON	30	OFF	ON	OFF	OFF	OFF
15	ON	OFF	OFF	OFF	ON	31	ON	OFF	OFF	OFF	OFF
16	OFF	OFF	OFF	OFF	ON	32	OFF	OFF	OFF	OFF	OFF

DIP SWITCH - SW2

DIP	Associated function
1 .. 4	Microwave frequency selection - see frequencies table
5	ON - Enabled microwave signal quality green LED OFF - Disabled microwave signal quality green LED
6	ON - Enabled alarm signal buzzer OFF - Disabled alarm signal buzzer
7	ON - Enabled alarm signal red LED OFF - Disabled alarm signal red LED
8	Unused, for future uses.

Frequencies Table - SW2

BM HP BARRIER CHANNELS	DIP 1	DIP 2	DIP 3	DIP 4	OLD BARRIER CHANNELS
F1	ON	OFF	OFF	OFF	GOLD
F2	OFF	ON	OFF	OFF	BLUE
F3	OFF	OFF	ON	OFF	SILVER
F4	OFF	OFF	OFF	ON	YELLOW
F5	OFF	OFF	OFF	OFF	-

ENG

Description of working

The two units (transmitter: TX and receiver: RX) must be positioned facing each other at the two ends of the distance to protect. **Be aware that the nature of the ground underneath, or special weather conditions might affect the real range.**

Working

The transmitter emits a modulated microwave signal (10,525 GHz), which is received by the receiver and whose amplitude is compared with the programmed alarm threshold.
When an intruder crosses the microwave area, it causes a signal-intensity decrease under a minimum level fixed; the receiver shows the alarm condition, lighting up a red Led indicator and opening the contat of the alarm relay.
If the signal of the transmitter is not received for over 30 seconds, the alarm relay could go back to quiet condition and the negative to terminal D (disqualification) fails until signal restoring.
For this reason, in the hard-wired system, **it is suggested to make the connection described in the chapter concerning disqualification.**

The drawings identify the natural shadow areas in the immediate sorroundings of the two units, which extend for about 3 meters, in a typical installation at 1 - 1,2 m

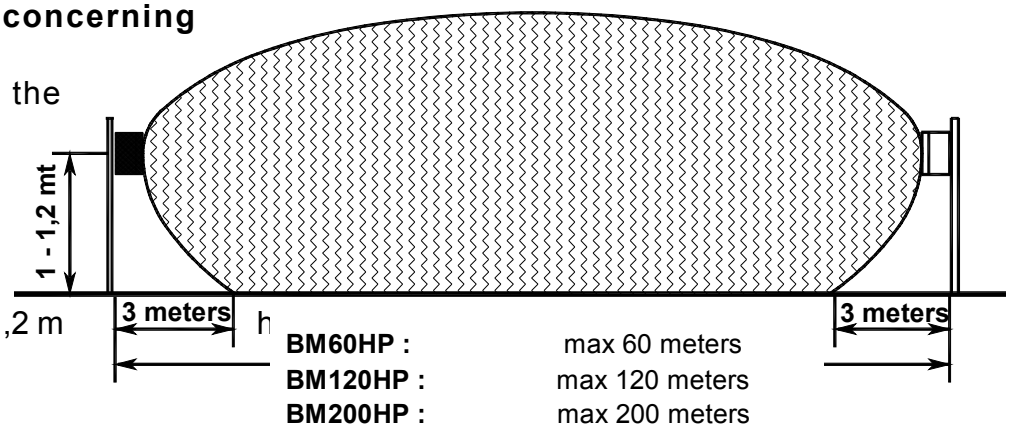

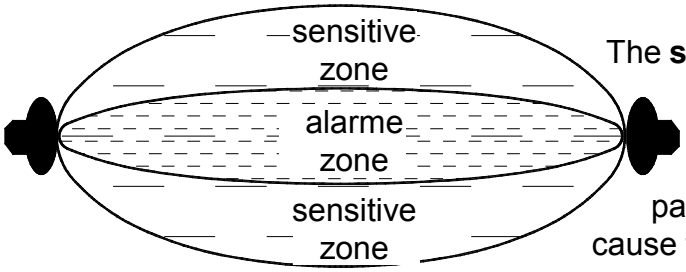

The **sensitive zone** shown in the drawings is to be taken into consideration, as a big target. Overpassing this area might cause the same perturbations as a small body passing the alarm area, that's to say might cause false alarms.

Note: the diagrams of the patterns shown in the drawings are an indication and a guide during installation. They do not represent the real radiation diagram of the antennas as they may be subject to variations due to environmental context.

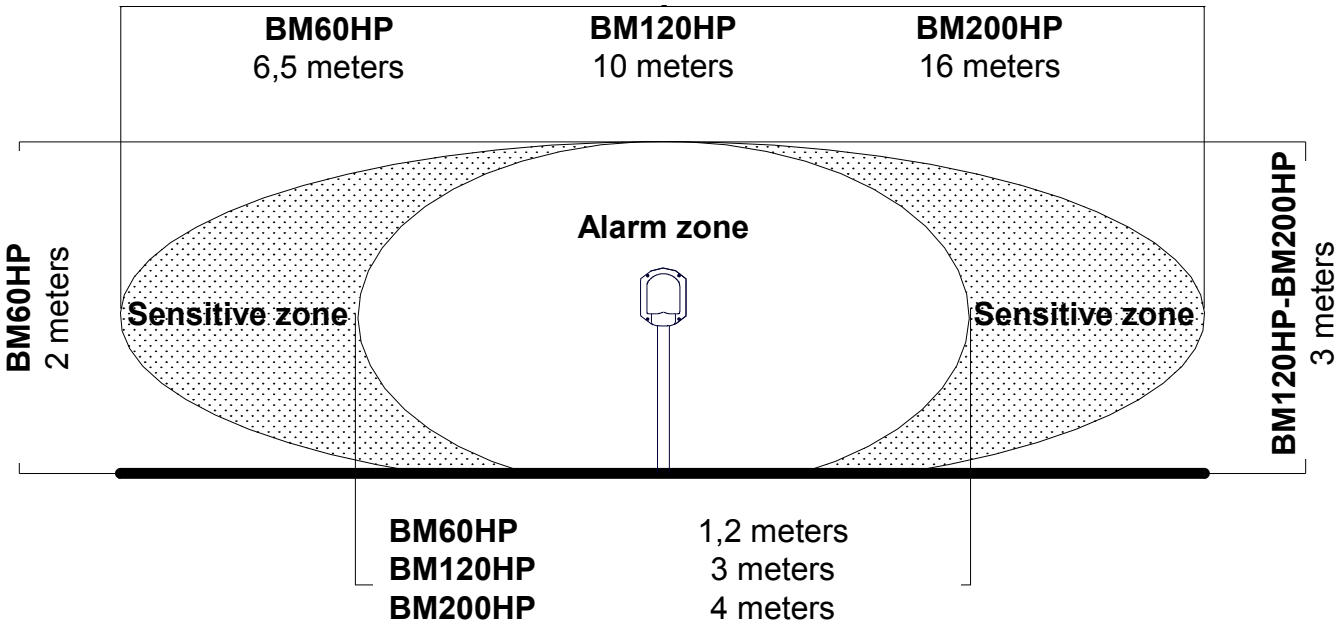

Positioning of the beams

For a correct installation of the system, choose carefully the positioning of the two units, according to following advice:

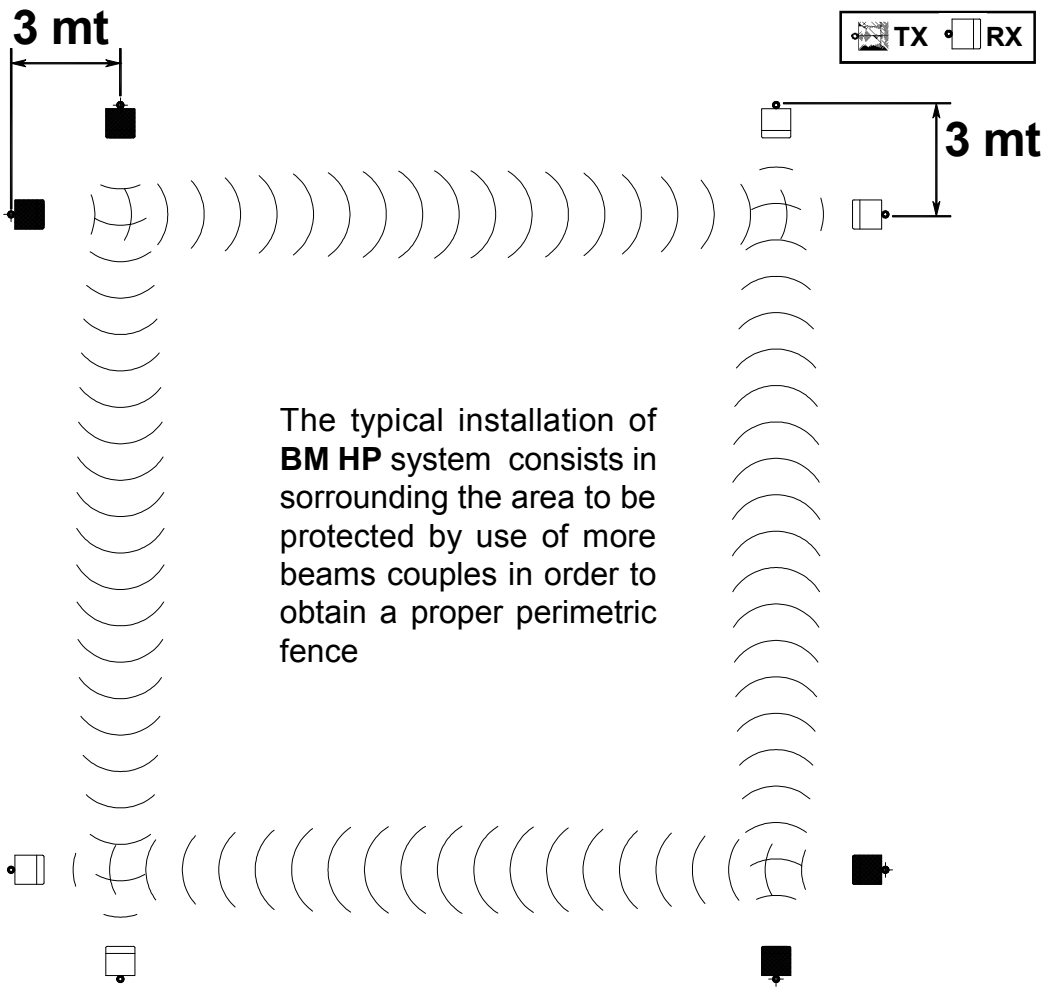

Drawings identify the correct positioning of transmitters and receivers, in order to eliminate any possible shadow area.
The drawings here below show how one or more couples of beams have to be positioned for reaching the distance required.
BE CAREFUL: only elements with different frequencies (F1, F2, F3, F4, F5) and of the same type (TX/TX or RX/RX) can be installed in proximity one to the other; in order to avoid interferences between transmitters and receivers belonging to different couples.

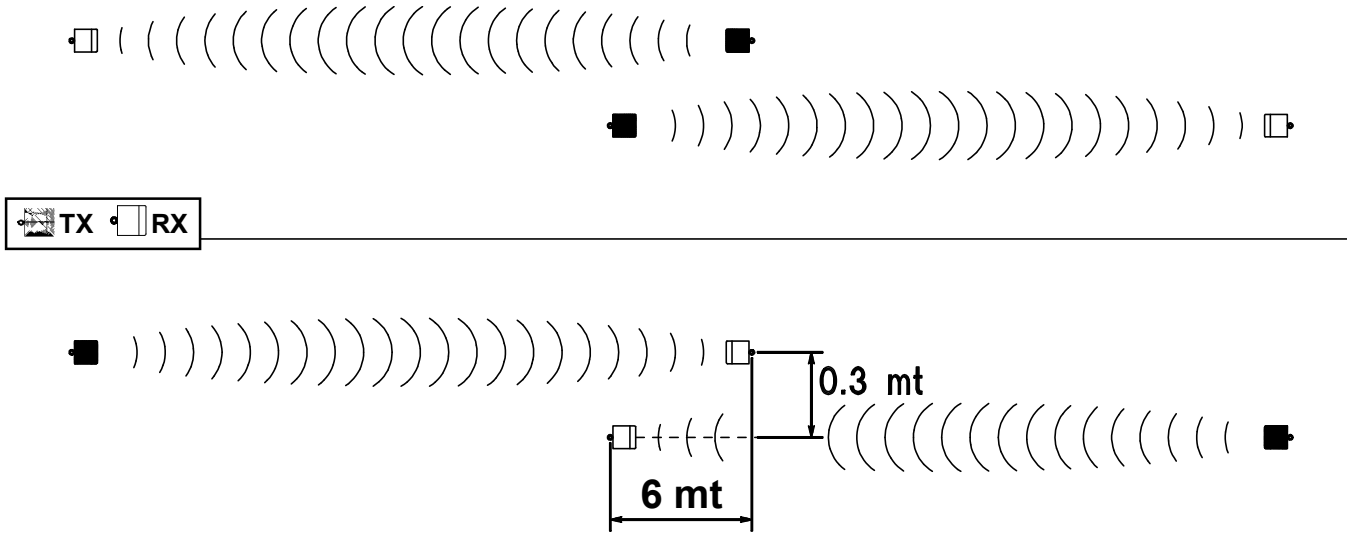

E
N
G

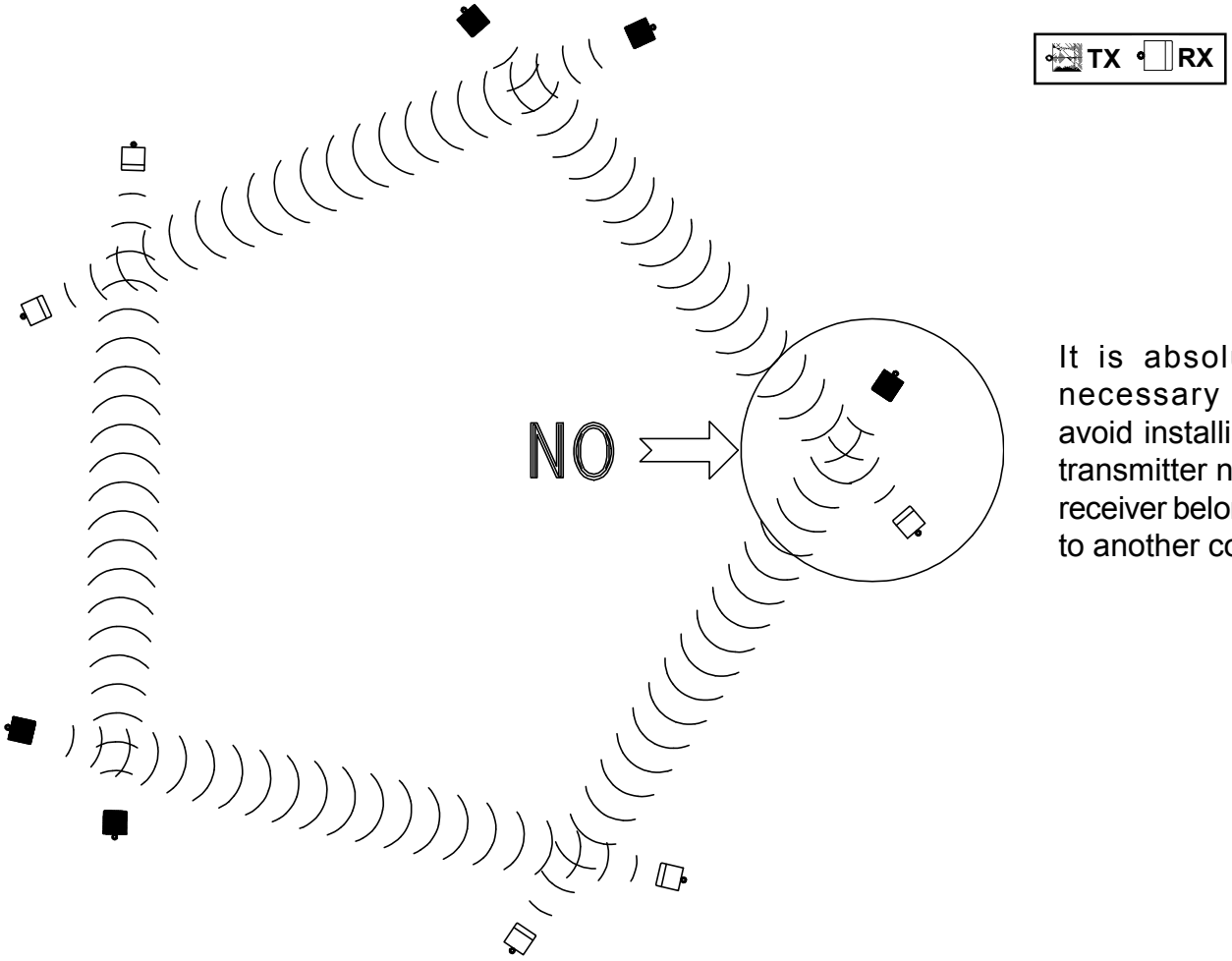

It is absolutely necessary to avoid installing a transmitter near a receiver belonging to another couple

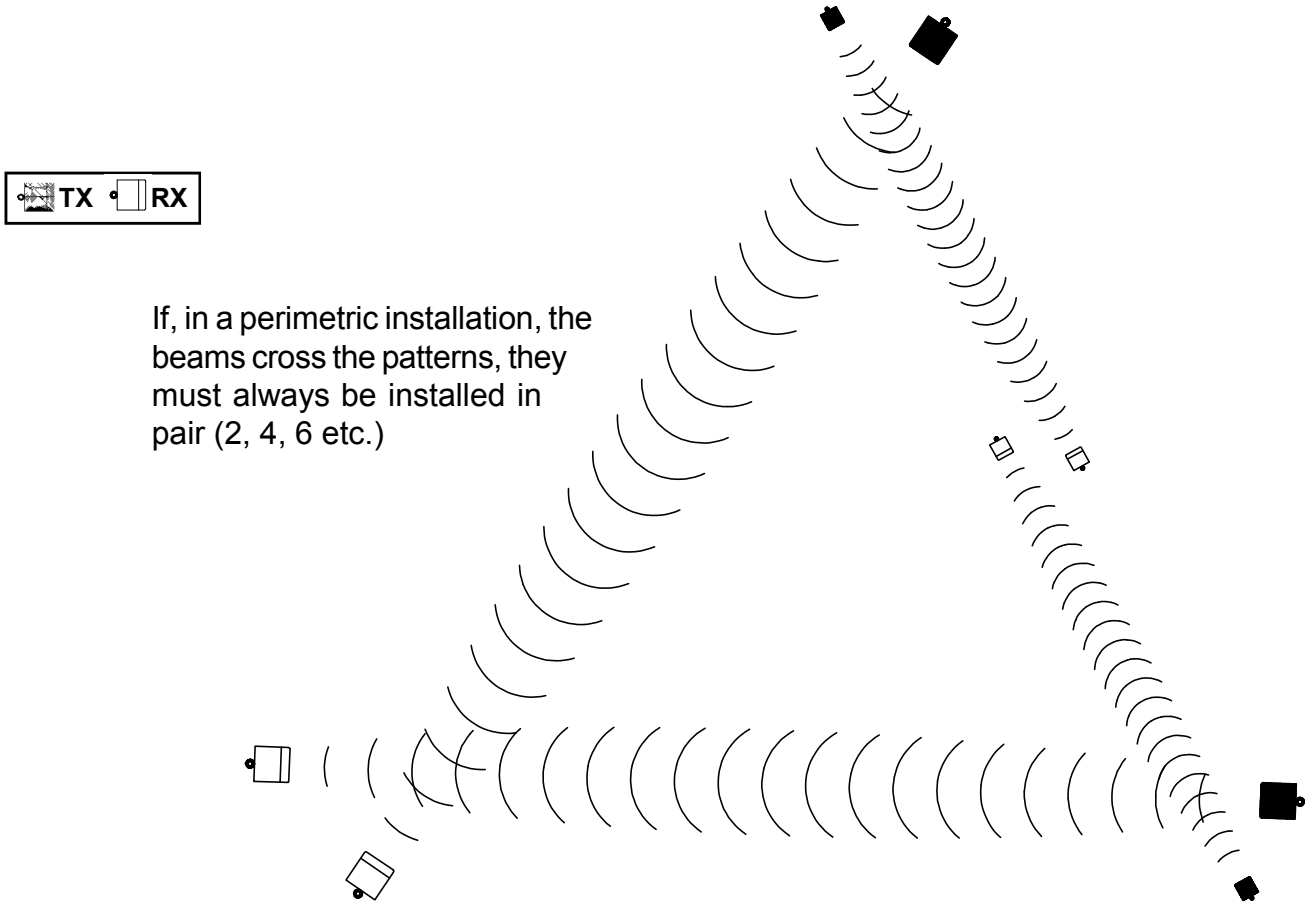

If, in a perimetric installation, the beams cross the patterns, they must always be installed in pair (2, 4, 6 etc.)

ENG

In order to extend the height of the protection, two couples of beams can be installed as shown in the picture. In this case, **it is suggested to use couples of beams having close working frequency** (two couples with frequency F1 and F2 or F3 and F4)

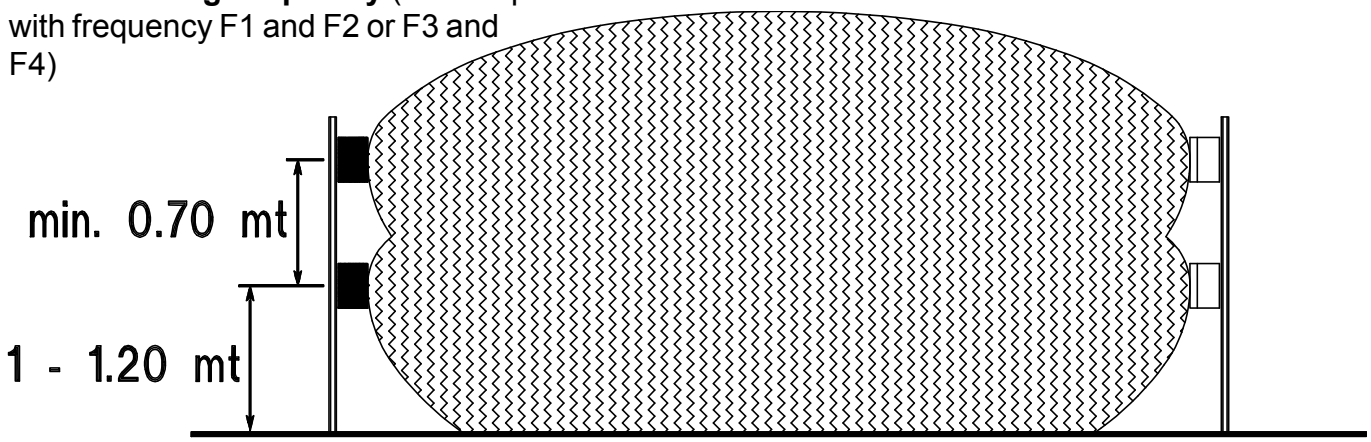

ENG

If the fence is made of bushes or metal fences subject to possible movement, the minimum distance must be 1 meter for BM60HP and 10 meters for BM120HP and BM200HP.

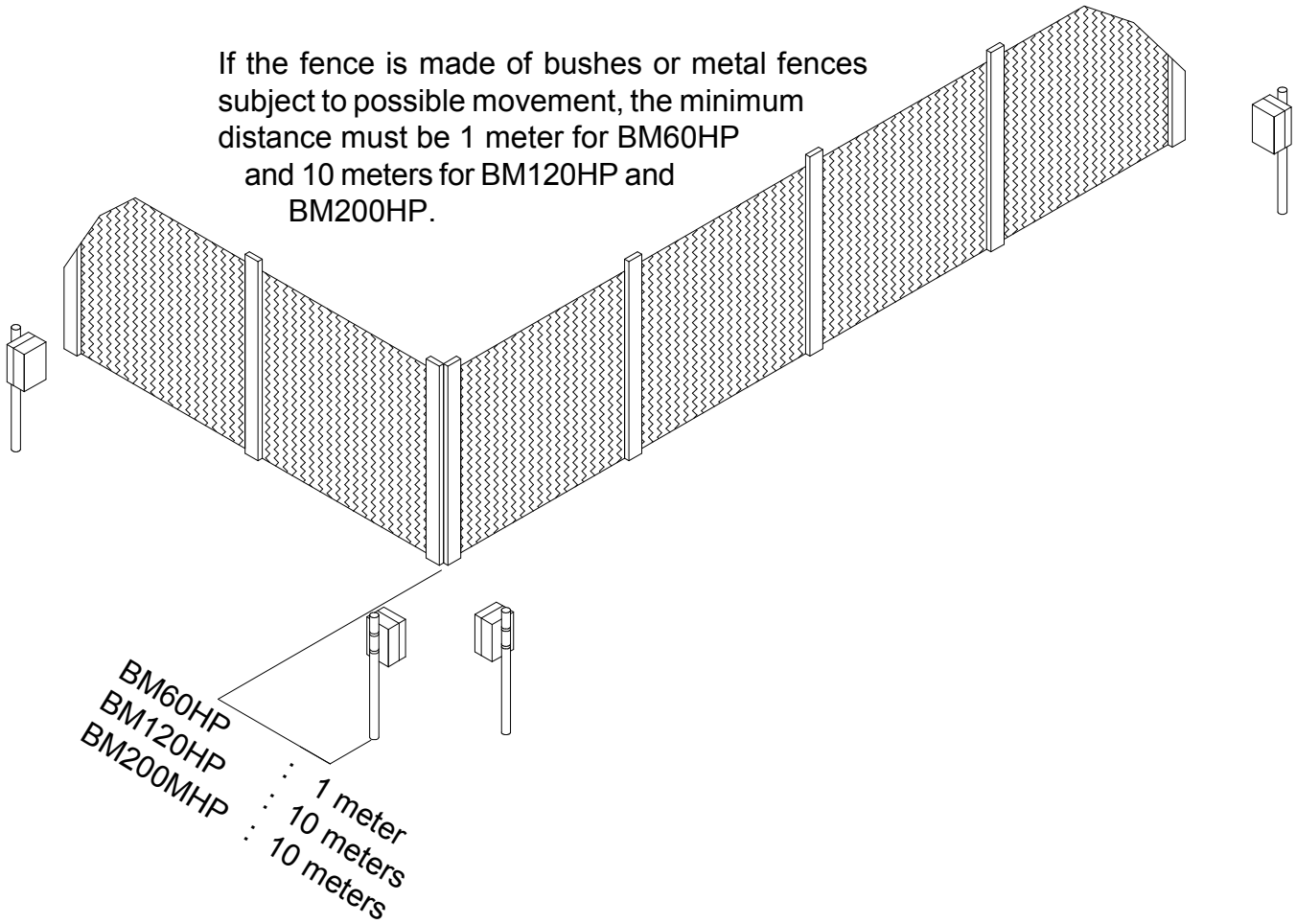

A corridor large not less than 0,6 meters for BM60HP and not less than 2 meters for BM120HP and BM200HP, must be left free from obstacles between transmitter and receiver; a clear visual must always be granted in this area

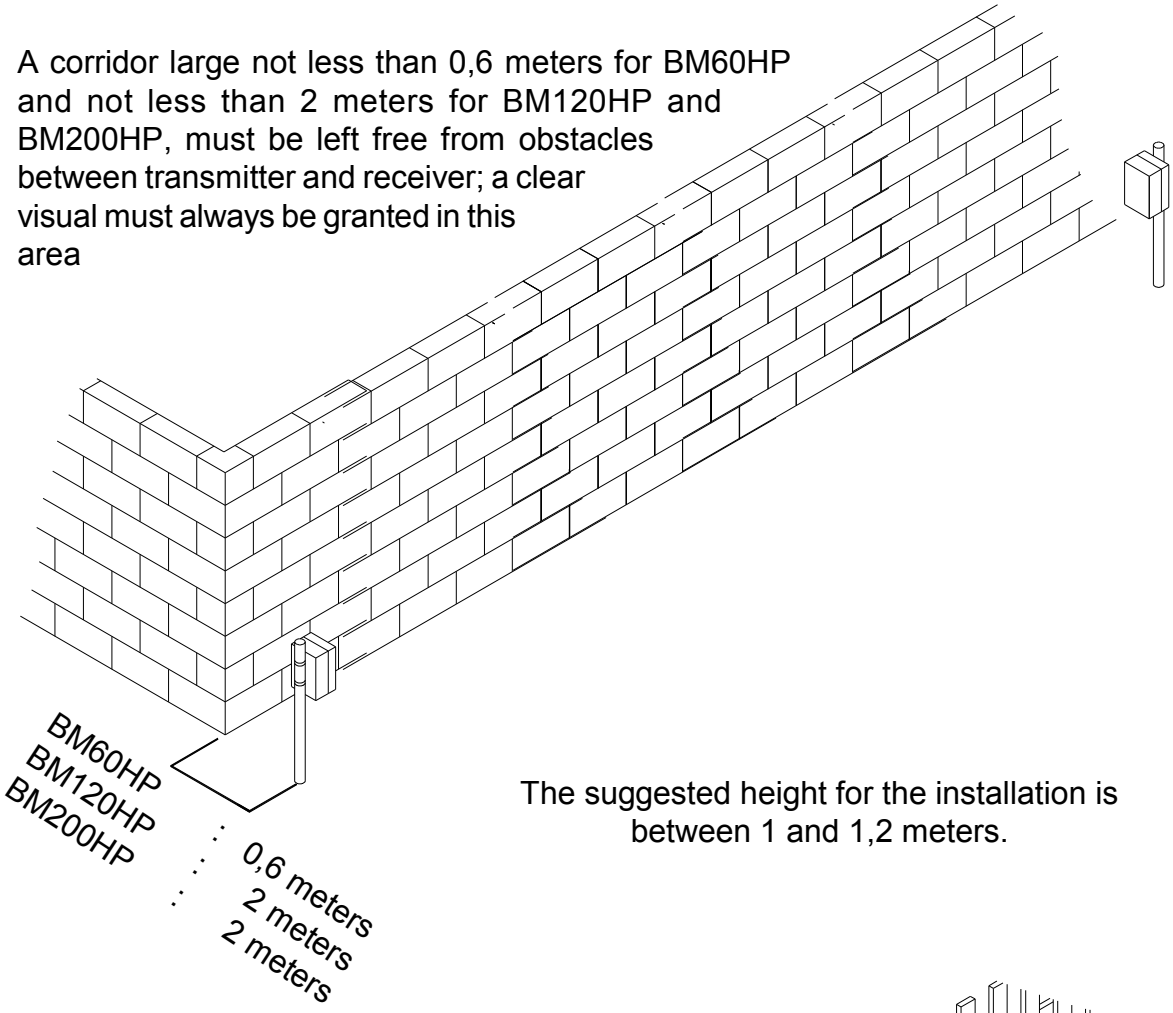

The suggested height for the installation is between 1 and 1,2 meters.

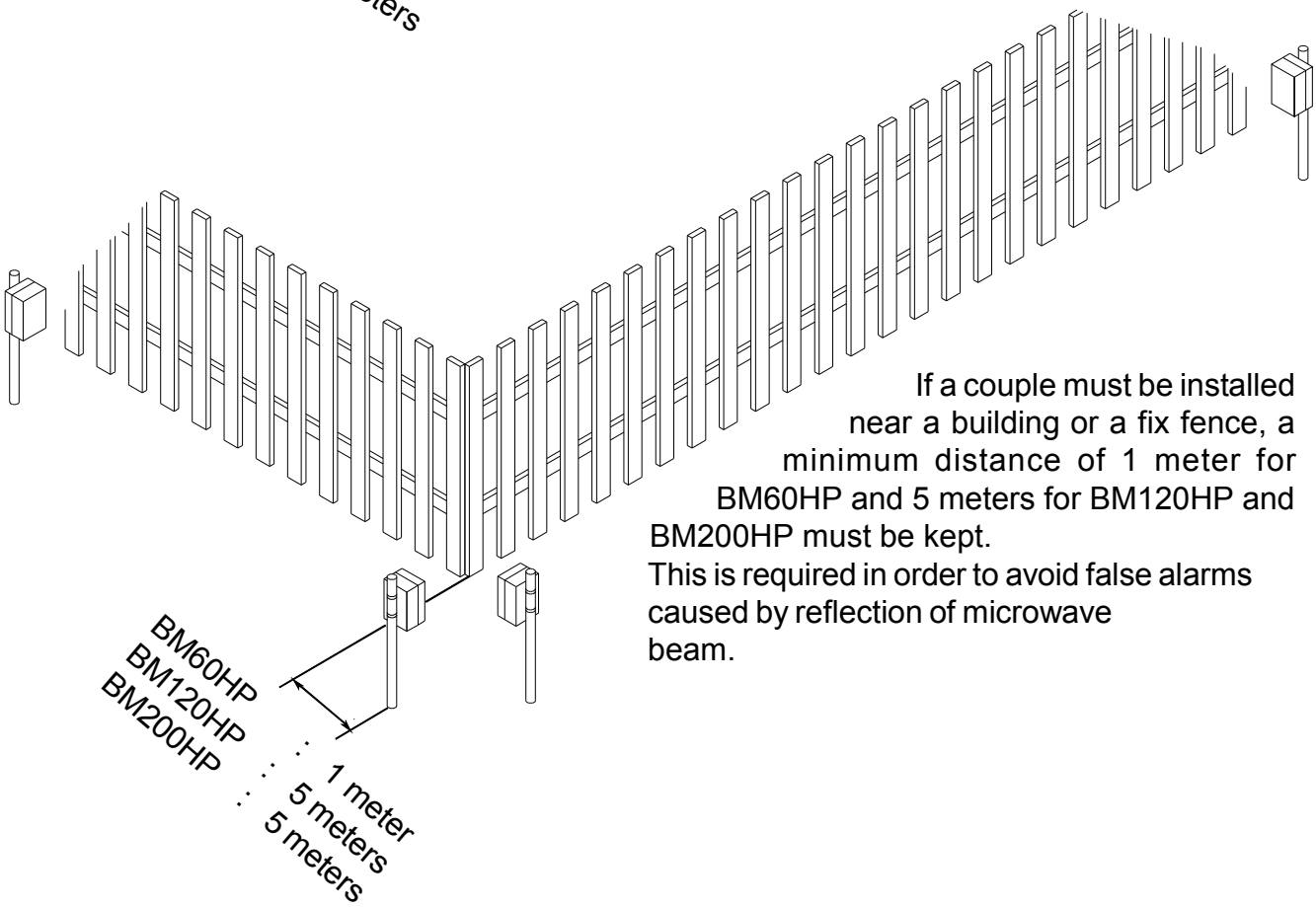

If a couple must be installed near a building or a fix fence, a minimum distance of 1 meter for BM60HP and 5 meters for BM120HP and BM200HP must be kept.
This is required in order to avoid false alarms caused by reflection of microwave beam.

ENG

It is possible to install the system **BM60HP** also to protect walls. In this case, the system of installation shown in the drawing can be used, in order to avoid false alarms caused by cats or birds. In this case also, the height from ground must be between 1 and 1,2 meters.

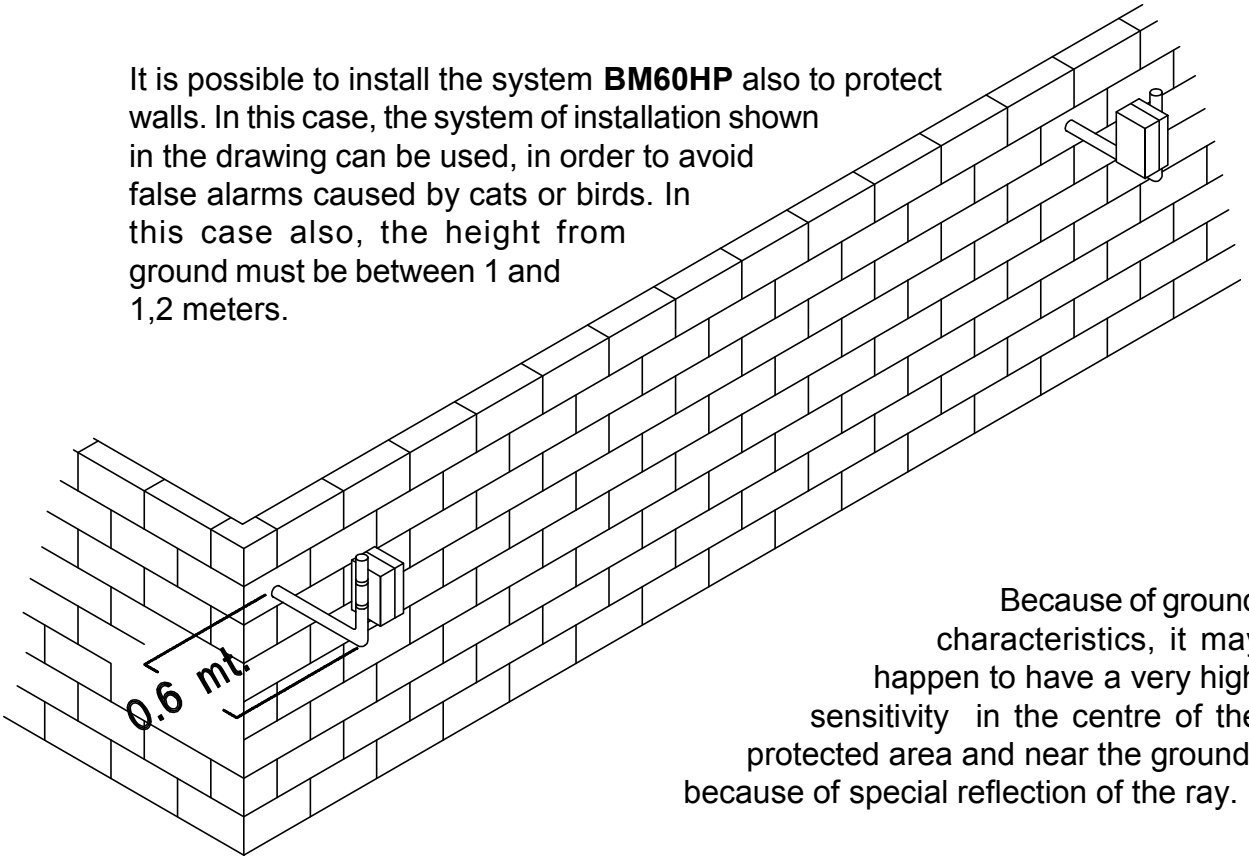

Because of ground characteristics, it may happen to have a very high sensitivity in the centre of the protected area and near the ground, because of special reflection of the ray.

E
N
G

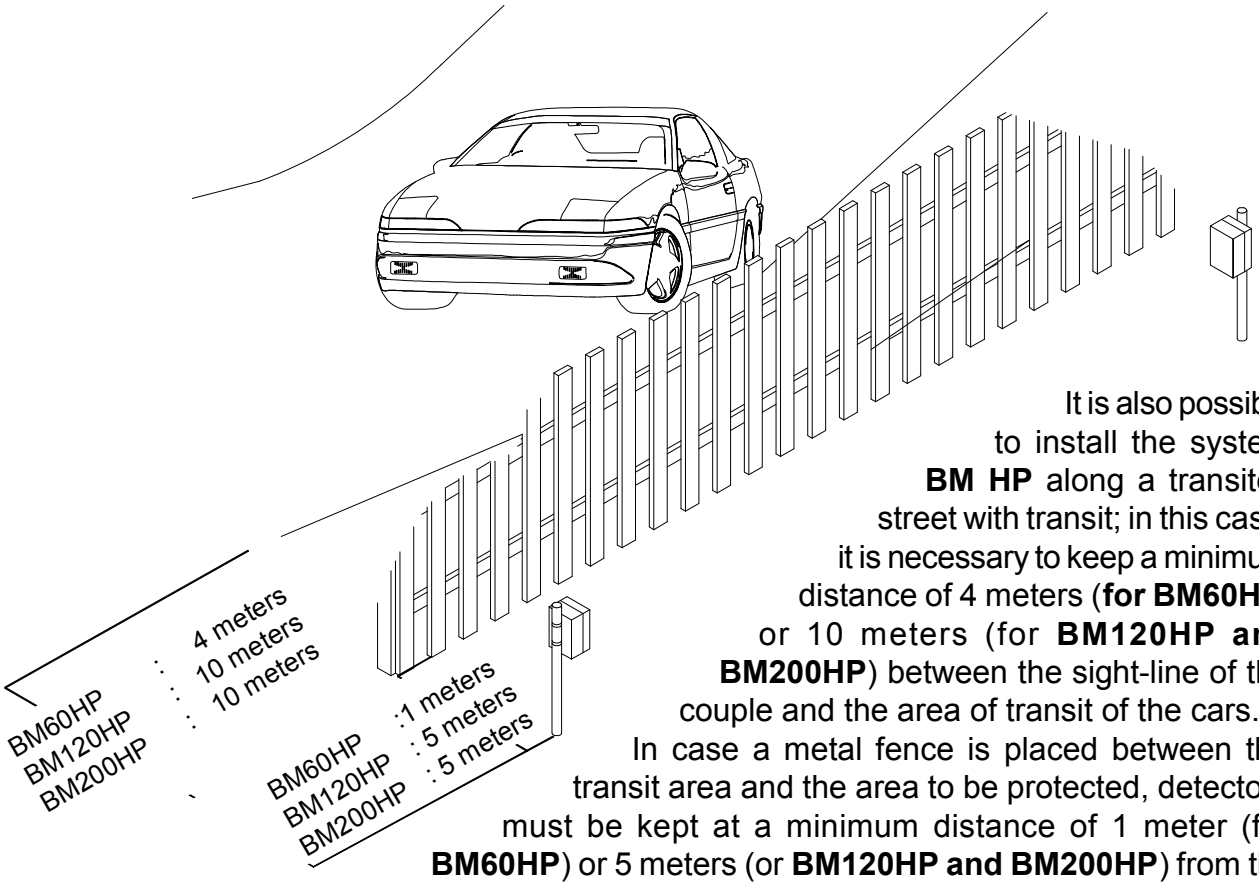

It is also possible to install the system **BM HP** along a transited street with transit; in this case, it is necessary to keep a minimum distance of 4 meters (**for BM60HP**) or 10 meters (for **BM120HP and BM200HP**) between the sight-line of the couple and the area of transit of the cars.

In case a metal fence is placed between the transit area and the area to be protected, detectors must be kept at a minimum distance of 1 meter (for **BM60HP**) or 5 meters (or **BM120HP and BM200HP**) from the fence.

- Should any pet be present and free in the installation area, it is suggested to carefully adjust sensitivity, in order to avoid the risk of false alarms due to the passage of these small targets in the areas which are very sensitive at the ground. To further decrease this risk, the height of installation of the couple can be increased a little bit.
- Should trees or bushes affect the protection corridor because of the wind, false alarms might occur. In the same way, if the system is installed near a hedge, this one must be carefully attended to avoid darkening the protected area.
- High grass ad bushes decrease sensitivity at groud level.
- Any obstacle or important difference of level in the ground in the protected area, create shadow-areas and very sensitive zones.

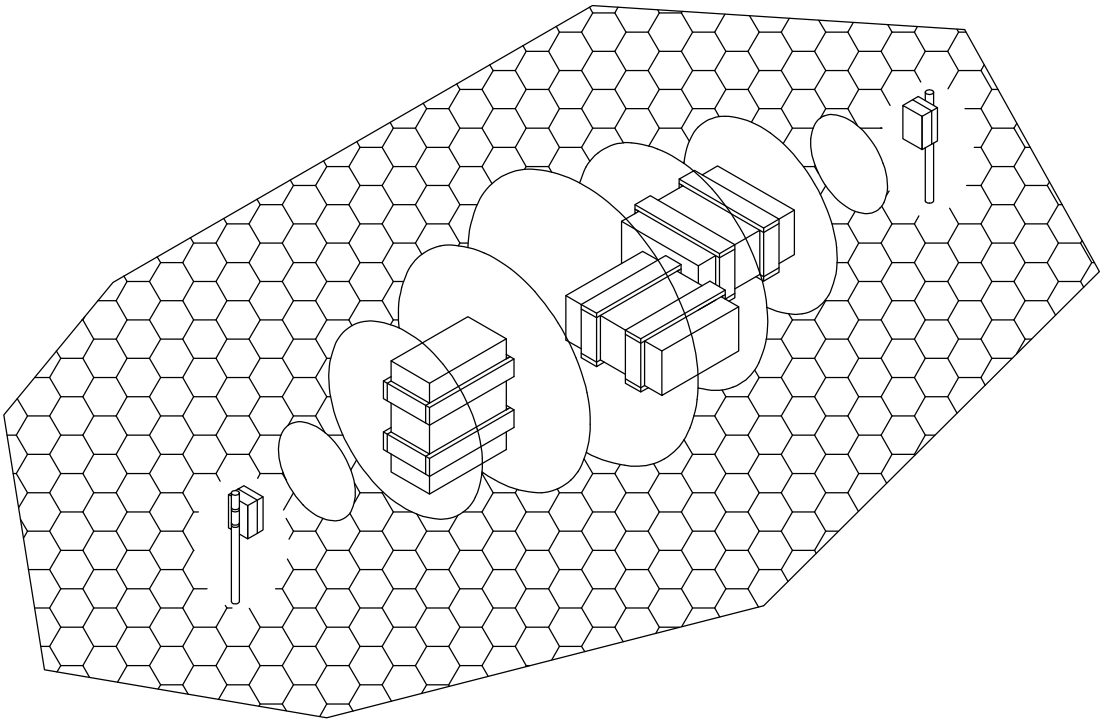

The **BM HP** system has a good tolerance against bad weather conditions and temperature variations; nevertheless it is necessary to care for following situations:

- **RAIN:** strong rain only causes a decrease of signal power whilst water puddles may increase sensitivity at ground level
- **SNOW:** snow fall does not affect beams sensitivity, but the system cannot work if it is entirely covered by the snow; so take care in areas with frequent and abundant snow
- **FOG:** a very thick fog can decrease the signal for 1/3. Because of the limits of compensation of the gain automatic control (C.A.G.) , it is suggested to install the beams couple at a distance not exceeding 85% of max range,in the regions where a thick fog is frequent.

The temperature working concditions are between - 20°C and + 55°C; <u>if the use is required in areas where temperature goes lower than 0°C, it is necessary the permanent installation of the heating kit</u>, which requires an alternate current at 12 V for a consumption of 150 mA for any element of the beam (see **Kit TERM** for installation of heating kit).

Advice for installation

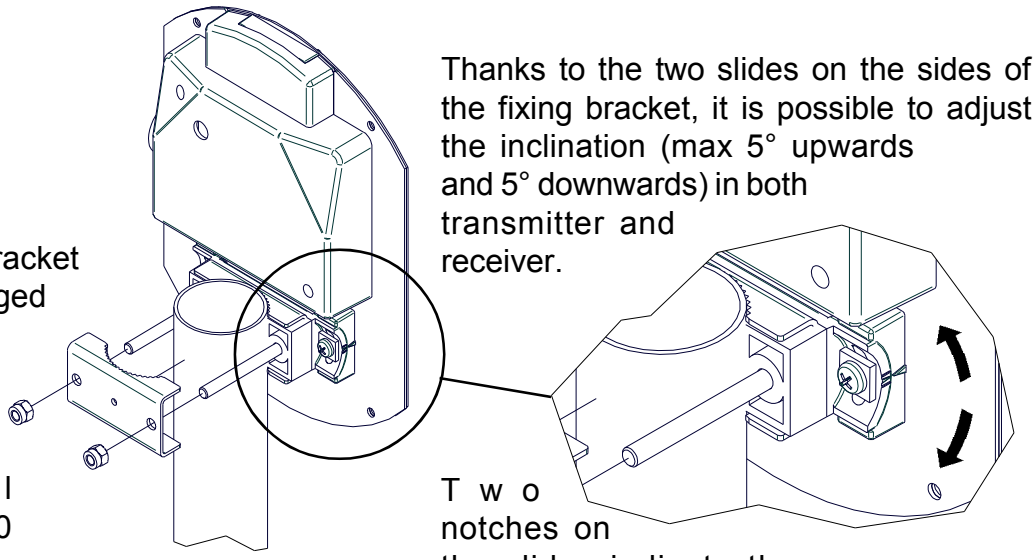

The fixing bracket is pre-arranged for the installation on a steel pipe, whose external diameter is 40 millimeters

Thanks to the two slides on the sides of the fixing bracket, it is possible to adjust the inclination (max 5° upwards and 5° downwards) in both transmitter and receiver.

Two notches on the slides indicate the max inclination

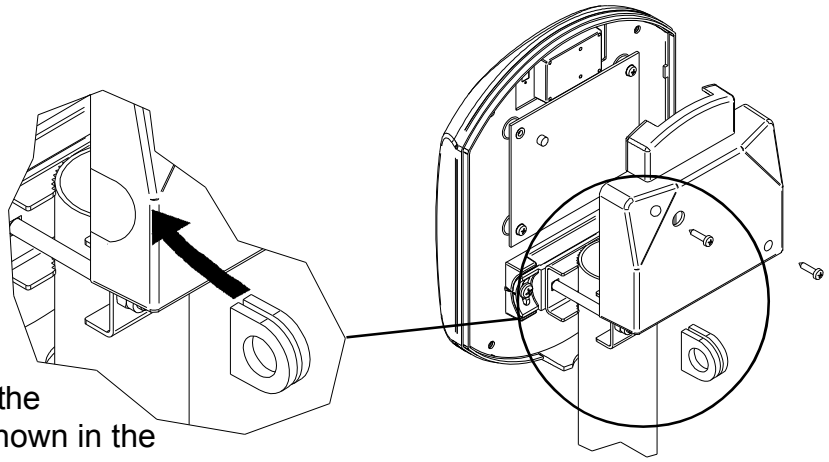

- Use special care for the cables entry, in order to avoid moisture and rain penetrating inside the box.
- For cable entry inside the covers of board protection, use the cable-loops given within (as shown in the drawing)
- **In the hard-wired system use anti-fire shielded cable (2 x 0,75 mm² + 8 x 0,22 mm²)**

In the wireless system, connect the support pole to ground and use an additional shield for the supplying cable 220 V ~ inside the pole, in order to create a double isolation.

- Before installing the support poles in a definitve way, it is suggested to make a trail installation in order to find out the best position of alignement for the best effective detection:

1. Position the beams couple in the centre of a free area, respecting the minimum distances for beams positioning and the installation height
2. Supply the transmitter and the receiver with two batteries and orientate TX and RX one towards the other
3. Check the signal on TP and adjust it at 7,3 V ⎓ .
4. Move the two beams towards RIGHT/LEFT within 30 - 50 cm and Up/Downwards checking the variations of signal of TP and identifying the signal max point.
5. Once identified the best position, fix the brackets.

- During positioning and adjusting of the Receiver, take care not to have big bodies inside the sensitive zone, which will then be moved when the system is in use, such as lorries or cars; the adjustment could be highly affected.

ENG

Transmitter installation inside the wire system

1) Choose the position of the Transmitter, fix it at the wanted height and adjusted as precisely as possible in the direction where the Receiver will be mounted.
2) Position the 4 dip-switches depending on the chosen work frequency.
3) Connect the power supply (from 11.5V⎓ to 15V⎓) and check the functioning of the Transmitter, by switching on the red LED; by removing the bridge S1 (Led Off), the LED can be disabled to decrease absorption.
4) Connect the TT clamps of the electronic board tamper to the tamper proof line of the control unit.

Receiver installation inside the wire system - UNIVERSAL

1) Install the Receiver in the envisioned support point, at the same height as the Transmitter.
2) Position the 4 dip-switches depending on the chosen work frequency.
3) Connect the power supply (from 11.5V⎓ to 15V⎓) to the positive + and negative - clamps.
4) Upon commissioning, the LED and buzzer, if enabled, will flash for a stabilising time
5) Connect the C and N.C. alarm outputs and the "FF" disqualification signal output to the detection line of the control unit and the electronic board tamper TT clamps to the tamper proof line of the control unit.

E
N
G

Receiver installation inside the wire system - SERIAL

1) Install the Receiver in the envisioned support point, at the same height as the Transmitter.
2) Position the 4 dip-switches depending on the chosen work frequency.
3) Connect the power supply (from 11.5V⎓ to 15V⎓) to the positive + and negative - clamps.
4) Upon commissioning, the LED and buzzer, if enabled, will flash for a stabilising time
5) Connect the DA and DB serial communication clamps on the barrier, to the respective on the satellite. The alarm signals, tampering, fault and all technical signals will be reported using this connection.

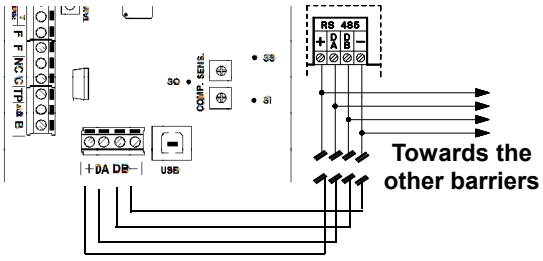

- It is possible to connect on the same serial port RS485, up to 32 barriers.
- **For connection of serial communication terminals DA and DB only, shielded cables of 0.5 mm² are suggested, whilst the section of the supplying cables (+ and -) of the devices connected to the serial has to be chosen by the installer according to the system and to his experience**
- The total length of the connection cable can be 600 meters and must be subdivided for all connected electronic boards.

Addressing

Should installation envision more points, the installed barriers must be addressed using the dip-switch, on the electronic board of the same barriers.
The numbering of the barriers must be progressive and there cannot be more peripherals with the same serial address.

Main warning for the wiring system

We recommend reaching the two units by means of flexible and water proof plastic piping and carry out connections using shielded conductors.

The choice of section of the conductors to use for the connections must be carried out depending on the distance from the power supply source, to guarantee a continuous minimum voltage of 12 Vol, on both units. Malfunctioning may occur should the power supply voltage drop below such value.

Adjustments

1) Orientate at sight the device in the direction of the transmitter and connect a voltmeter betwen the negative (-) and **TP** terminal (Test Point) on board

2) Orientate the device in horizontal way, looking for the position giving the max reading; in case it is over 7,3 Volt tthe signal level must be reduced by use of **LEVEL trimmer**, in such a way as to bring the signal to the best point of working, that's to say 7,3 Volt

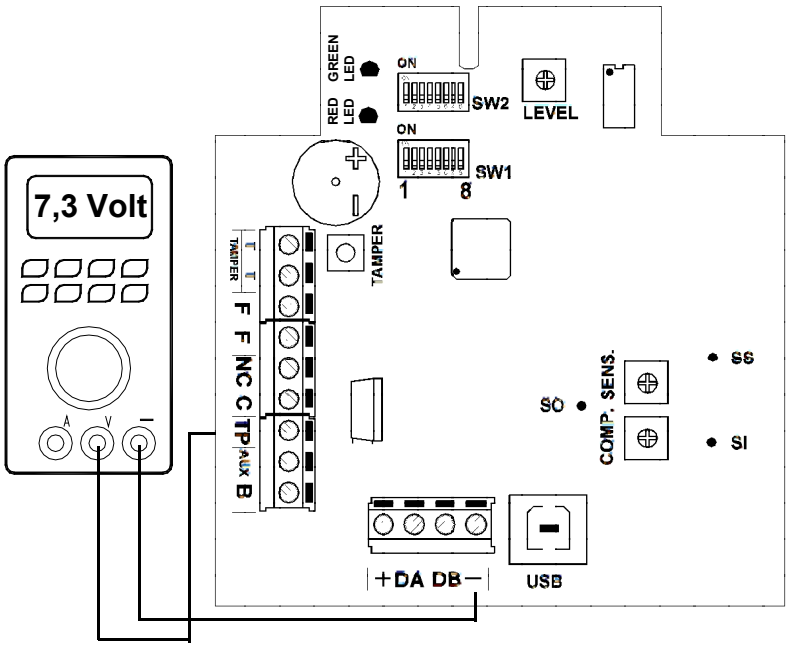

- It is possible to have a high value also with receiver not aligned to transmitter; in this case it could be a reflection of the beam transmitted, which must most be taken into consideration.
- In case the signal does not reach 6,8 V having LEVEL trimmer at max, move the device in vertical way within a limit of 10-20 cm.
- Shouldn't it be possible to reach the min. value, it will be necessary to decrease the distance between receiver and transmitter or look for a better alignement position

3) Check the quality of the signal received, keeping in mind that in absence of seeming movements inside the protected area:

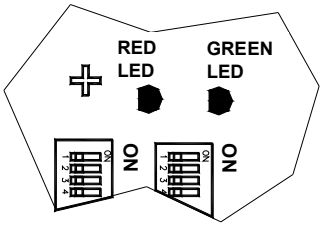

- Green Led on fix: there is no signal noise
- Green Led quick or slow flashing: the signal noise is low but is anyway detected by the beam
- Green Led slow flashing (off for about 1 second) , the signal noise is more important and it is near to the intervention threshold of the beam

In order to have a more precise indication on the quantity of noise and to have the possibility of making adjustments according to the environmental context, we suggest to use the software HPSOFT

4) after all tests, LEDs can be deactivated in order to reduce the consumption of the receiver

Note: Thanks to the **digital trimmer**, the barrier has the possibility of self-calibrating the **signal level** (LEVEL) and to compensate the environmental variations, guaranteeing the stability of the signal. Fog, snow, gradual variations of the reflecting surface will be automatically compensated by the barrier, both in positive and in negative, within certain values. Should the requested variation be above that tolerated by the system, the disqualification signal (FF) will be had.

E N G

Measurements of the signal by oscilloscope

In the drawing below, the points where to connect the oscilloscope are shown:

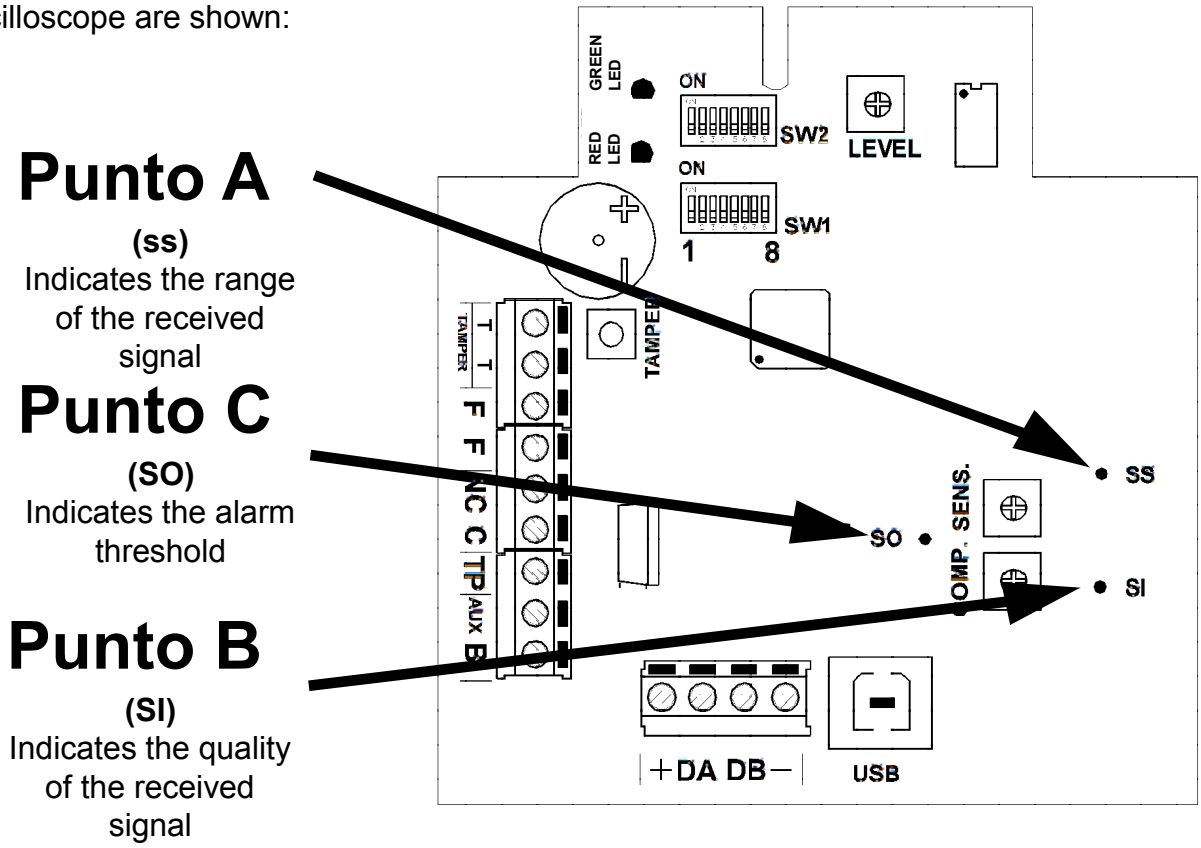

In the graphic here below the wave shapes concerning the signal quality are shown:

1- the beam is in quiet condition and there is no passage of people or any perturbation due to moving objects, the level is fix . Check that the quiet condition is as described.

2- the beam is disturbed or we are crossing a sensitive area (partial darkening)

3- the beam has been darkened and there is an alarm situation

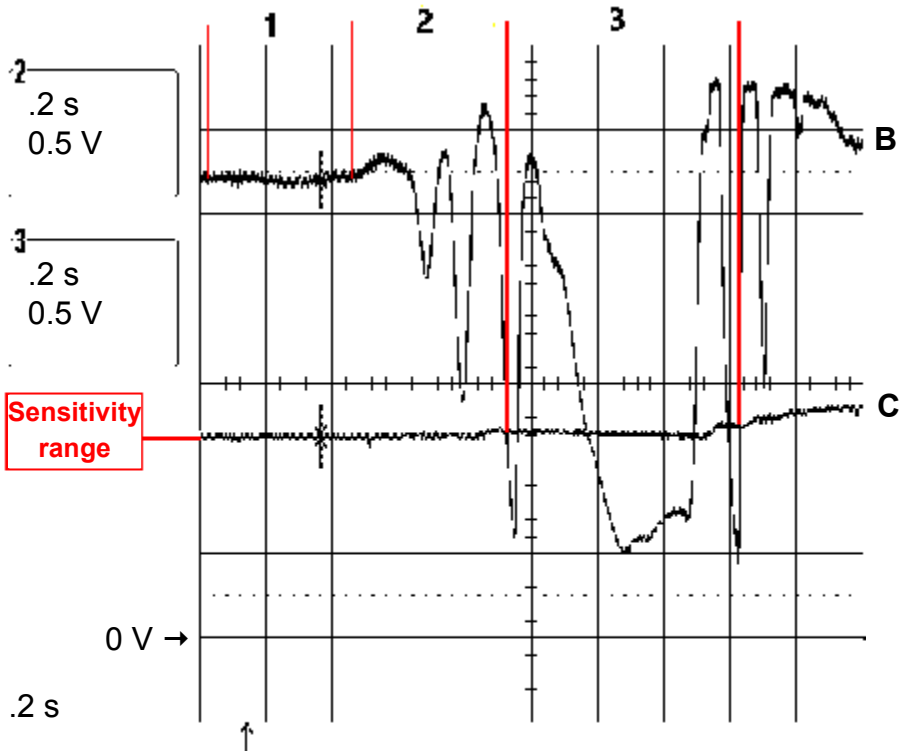

Point **B** shows the quality of the signal received

Point **C** shows the alarm threshold (trimmer sens.). In this case the sensitivity is adjusted at the half

ENG

Sensitivity Adjustment

1) Turn the SENS trimmer anti-clockwise in the minimum sensitivity position and carry out a test by walking in the central point of the covered zone (point with lower system sensitivity) and check the behaviour of the green LED.
2) If required, progressively increase sensitivity until the wanted reply degree is obtained.
3) 3) After each sensitivity adjustment, wait for approx. 20 seconds for all signals to be set and, therefore, carry out a new test.

Attention: an excessive sensitivity can cause unwanted alarms in critical conditions (intense rain, snow, etc.).

4) 4) A special compensation circuit has been included in the BMHP system, adjustable by means of the COMP trimmer (turning it clockwise increases compensation); this circuit records the disturbances produced within the microwave field when the target is nearing or moving away, transversally at lobe, and automatically increases the sensitivity of the Receiver to facilitate detection when the target crosses the central line of the lobe. The compensation circuit can be completely excluded using DIP6=OFF of SW1. An excessive compensation can cause an unwanted alarm of the barrier when objects move near the lobe.

If wanting the complete management of the adjustments, using the software (mod. HPSOFT), the trimmers "SENS" and "COMP" and DIP6=ON must be set halfway

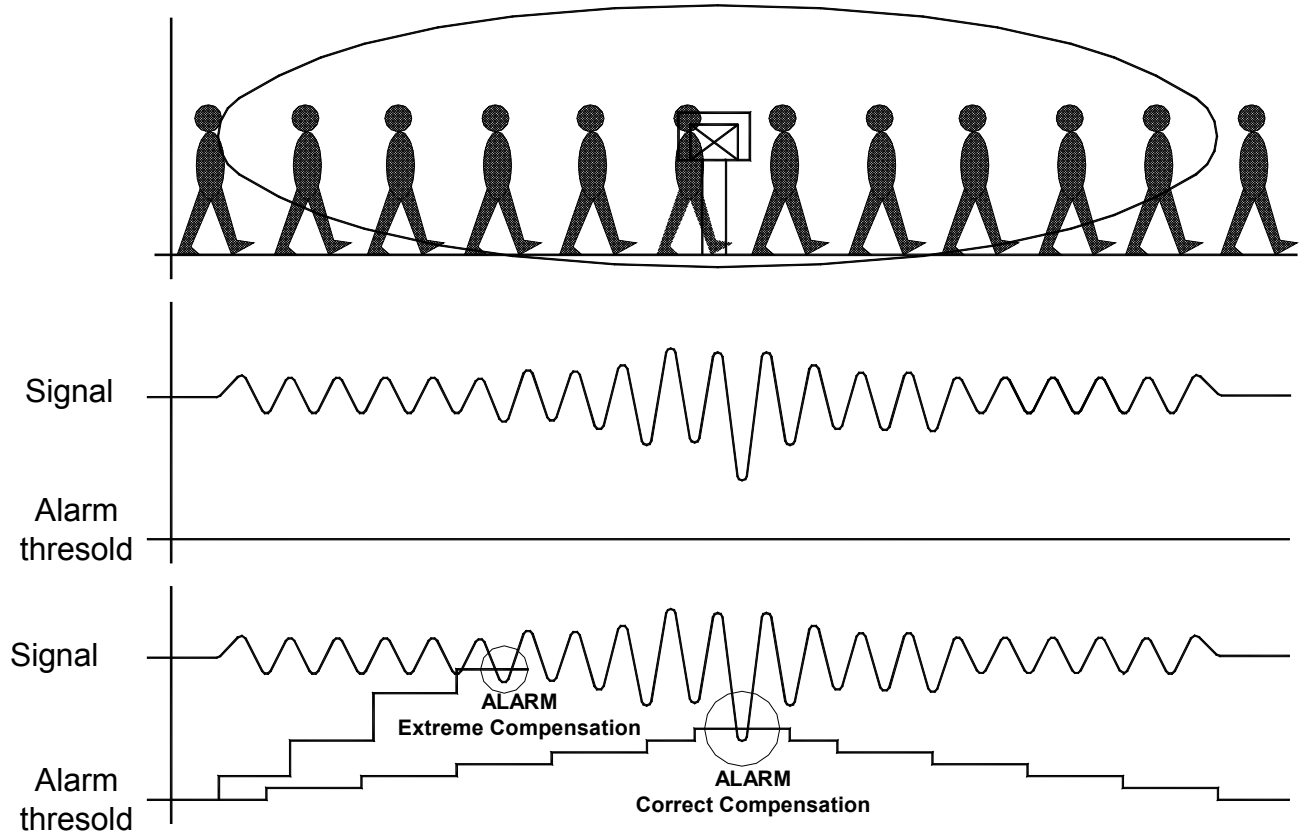

CAUTION
(BM120HP and BM200HP ONLY)

Due to larger pattern and to compensation circuit, **BM HP** beams are more sensitive to perturbations caused by moving objects in the areas near the corridor protected. Consequently, the security distance to be kept in the installation, especially in respect to the transit of vehicles, trains, or presence of big trees or bushes, must be increased. In the special case of a street with vehicles transit, parallel to the protected area, it is suggested to keep a minimum security distance of **10 meters**.

E
N
G

Kit TERM (optional) Resistence fo inside heating

- For installation in an indoor or outdoor place where temperature can go lower than 0°C, it is necessary to use the heating **kit Term 1** in both Receiver ad Transmitter. This has to be done in order to avoid formation of condensation which might affect the good working of the electronic circuit.
- The optional heating kit, is made of a circuit where an electromechanical thermostat, a heating resistence and a terminal board for connection to supplying, are placed.
- Supplying must be given by means of an external trasnformer with output at alternate 12V ; the consumption of any heating resistence is 150 mA at the tension of alternate 12 V.
- The thermostate intervention occurs taking off supplying to the resistence when the temperature of 30° C is reached inside the box.

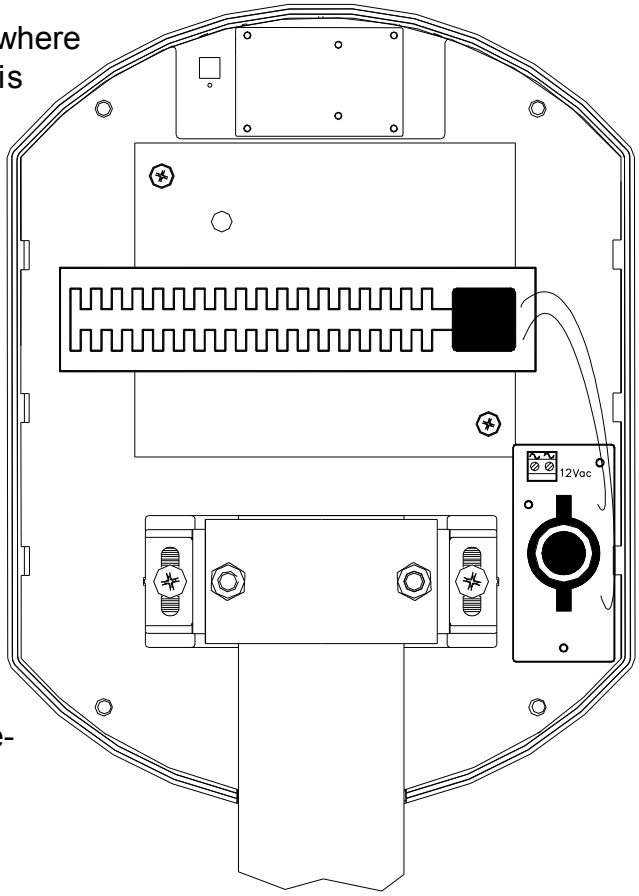

Supplying:	alternate 12 V
Consumption:	150 mA max
Transformer:	input: 220 V ~ output: 12 V ~ for 4 couples of beams: 20 W power

Kit AMP (optional) Anti-removal

The anti-removal **kit AMP** is made of two bulbs, whose function is sending an alarm in case of tampering or removal of the beam from its support. This kit must be positioned in such a way that one of the bulbs is installed in **vertical position** compared to the device and the other one in **horizontal position** as shown in the picture.

This system allows a complete protection against any attempt of :
- removal of the beam from the support
- removal of the supports from fixing points

The horizontal bulb must be positioned in suc
that the contact opens as soon as there is an a
of moving the beam.
Before connecting the tamper line to the contro
check that the contact of single bulbs as
tamper line is closed .

Example: RX BEAM

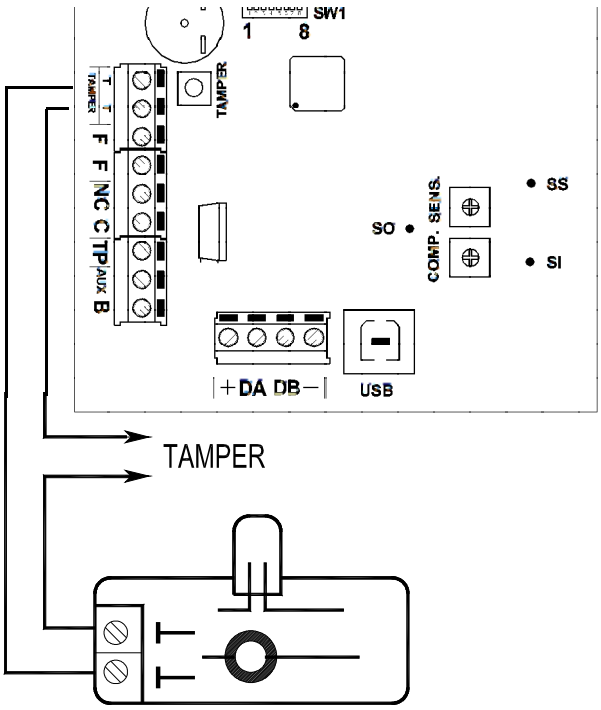

Disqualification (Important warning)

In order to prevent and signal misalignments caused with the system disarmed or by obstacles interposed within the action beam of the barriers, for installations envisioning the UNIVERSAL connection, it is essential to connect the disqualification output (FF clamps) in series to the alarm relay exchange.

NOTE

The FF output supplies a normally closed relay exchange that opens when the signal level drops below a minimum level for more than 30 seconds.

In the examples below, the control unit will signal the open zone, both in alarm and in disqualification.

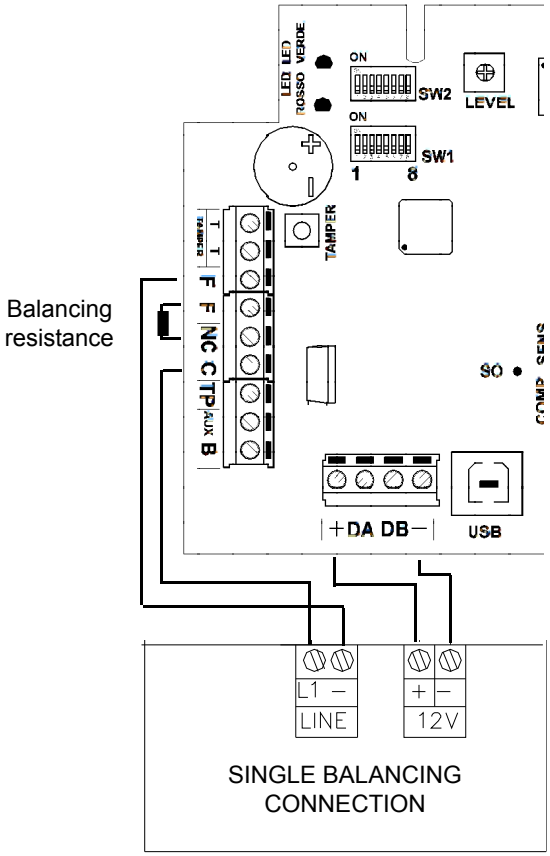

SINGLE BALANCING CONNECTION

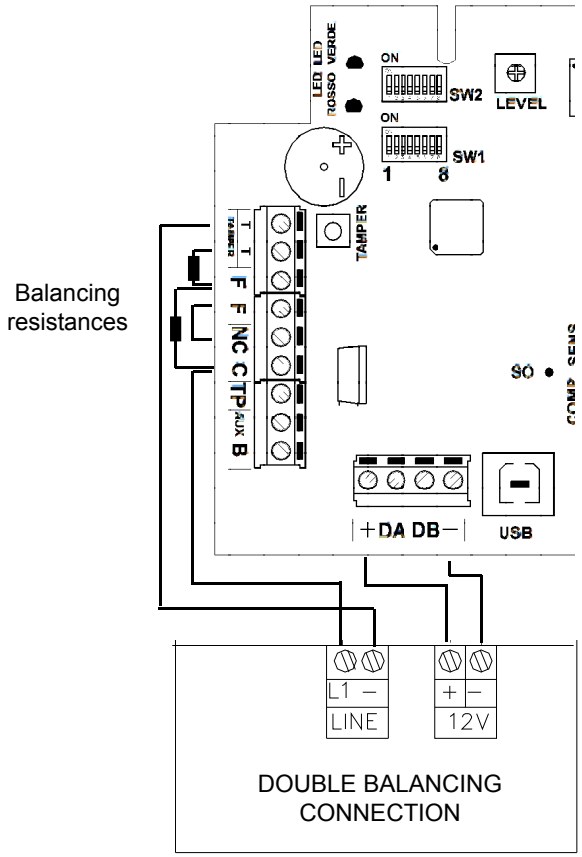

DOUBLE BALANCING CONNECTION

The power supply must come from very low safety voltage circuit with the characteristics of a limited power source protected by a fuse.

INSTALLATION AND MAINTENANCE MUST BE EXECUTED BY QUALIFIED PERSONNEL

E N G

Optional Brackets

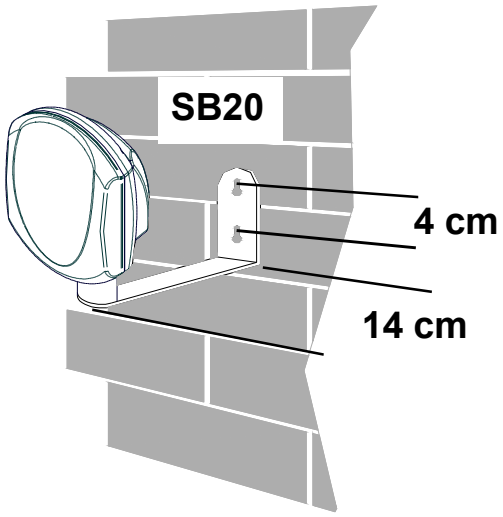

The optional bracket **mod. SB20** and **mod. SB60** can be used for installation to the wall

The bracket **mod. SB20** has a wheelbase of fixing holes in the wall of 4 cm

Optional bracket **mod. SB60** can be used with **BM60HP**

The bracket **mod. SB60** has a base rectangular 14x18 cm wheelbase of fixing holes in the wall of 11x15 cm.

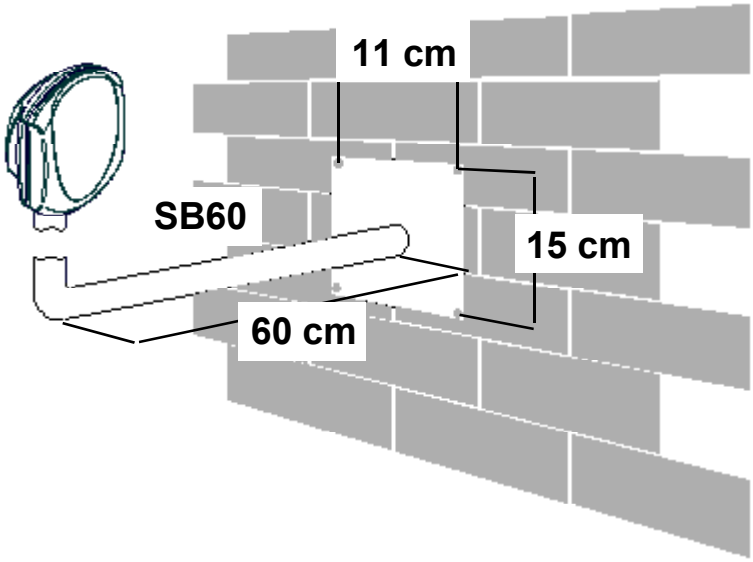

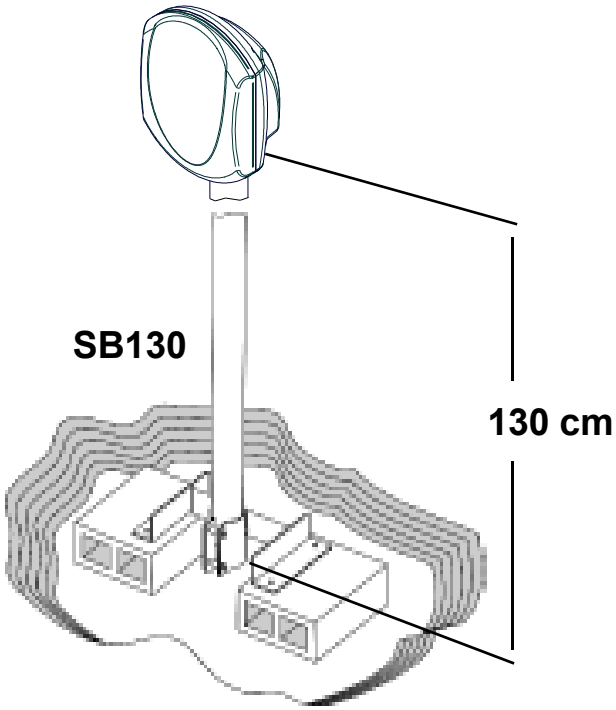

Optional brackets **mod. SB120** and **mod. SB130** can be used for installation to the floor

The bracket **mod. SB120** has a square base of side 18 cm with a wheelbase of fixing holes in the floor 14 cm.

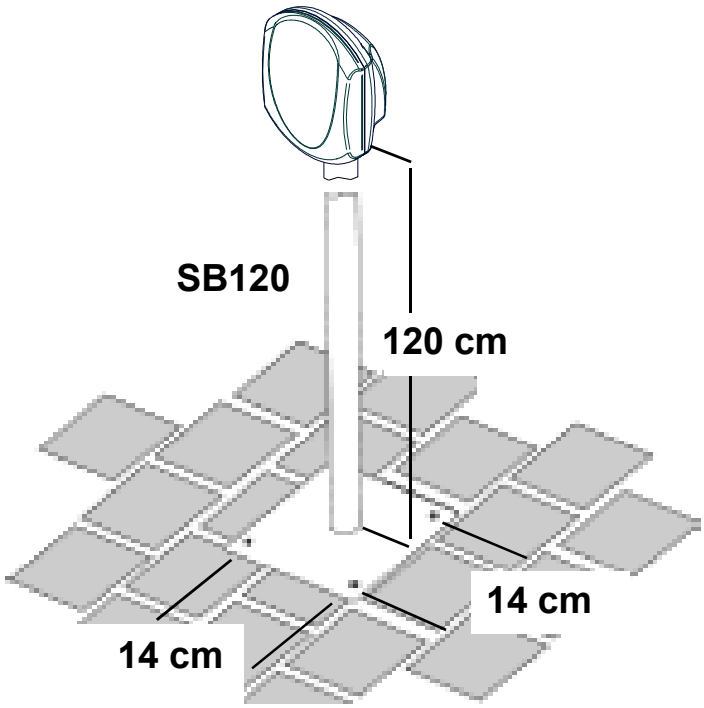

ENG

Special functions

Thanks to the software from PC HPSOFT, it is possible to make the best use of the potential of digital technology.
HPSOFT allows, for each digital barrier:

- **Check:**
  - microwave signals
  - outputs status (alarm - disqualification - tamper)
  - input status (AUX)
  - barrier diagnostic (temperature - test point - compensation on/off - power supply)
  - alarms history with over 3600 recordings complete of time and date
  - customised archive by the installer
  - synoptic barriers status (if connected in RS485 to satellite)
  - signals recording archive per barrier
- **Management:**
  - sensitivity adjustment
  - compensation adjustment
  - valid signal threshold adjustment
  - customisation archive dedicated to "FALSE ALARMS"
  - customisation archive dedicated to "ALARMS"
  - signals recording
  - select the detection method:
    - traditional detection mode
    - ALARMIDENTIFY detection mode
  - upgrade firmware (not active in PSTN/GSM)

These functions are active with USB connection in local, meaning directly connected on to the digital barrier receiver, or in USB on XSATHP satellite or PSTN/GSM telephone connection.
Once the management software is installed, it is necessary to create a numerical "New Code" in "Clients Master" and define that it is BM 60 - 120 - 200 HP.

Return to initial screen

Activation of the USB/Telephone connection, for the displaying and management of the barrier settings

Activation of the USB/Telephone connection, for the simultaneous displaying of the barrier status

Activation of the USB/Telephone connection, for the displaying and management of the barrier alarms history

Activation of the USB/Telephone connection for the customisation of the signals library dedicated to the "Alarms/False Alarms"

Access to the local archive of the signals recordings carried out manually by the installer

Access to the personal notes per system

Activation of the firmware upgrade procedure of the barrier

ENG

Detectors Management

Access to this menu imposes to choose the type of connection; USB - PSTN/GSM.
For a connection in local it is necessary:

1- to power the barriers
2- to connect the barrier receiver to the computer using the USB connection.
note: if first connection, carry out the drivers loading procedure for the recognition of the peripheral.
3- to select the barrier address on HPSOFT and then choose "connect"

Once connected, it will be possible to display the information relating to the barrier in real time, from the field signal to the outputs status; it will also be possible to vary the functioning parameters and adjust the date and time like on a PC.

Adjust time and date

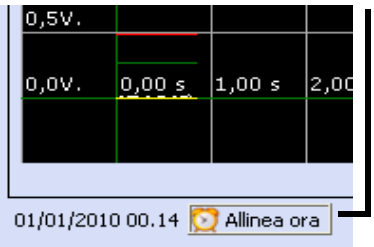

Select "Align time" to synchronise the time and date to that of the PC. This setting is important for managing the events history of the barrier

Parameters displaying

These parameters highlight:

Temperature: : indicates the functioning temperature of the receiver.
Test Pont: indicates the value of the received signal.
Compensation: indicates, if the function is active (DIP 6 = ON), the integration value.
Power supply: indicates the power supply present on the receiver

Outputs Status

This section indicates the status of the receiver:

Alarm: if the barrier is in alarm, the red LED activates
Tamper: if the barrier is tampered with, the red LED activates
Disqualification: if the barrier is in disqualification (lowering of the constant signal (>30sec.)), the red LED activates
Aux: if the barrier's auxiliary input is open, the red LED activates (DIP 8 =OFF the barrier does not consider the input)

Recording

The "**REC**" button allows the installer to start recording what happens to the barrier on the PC. All signals will be directly saved on to an archive on the PC that can be accessed at any time. This function is very interesting when wanting to check the detection zones of the barrier or monitor its behaviour.

The "**STOP**" button interrupts the recording.

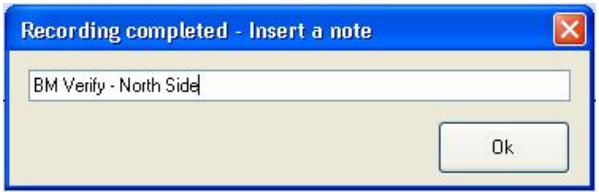

It will be requested to "Enter a note" used to distinguish the various files of the recordings history.
To display, it is necessary to consult "Recordings Archive" and select the file.

ENG

Oscilloscope function

This application enables checking the barrier signals in real time.
Timescale: it selects the timescale on the axis of ordinates.
Traces to display: it enables the displaying of traces.

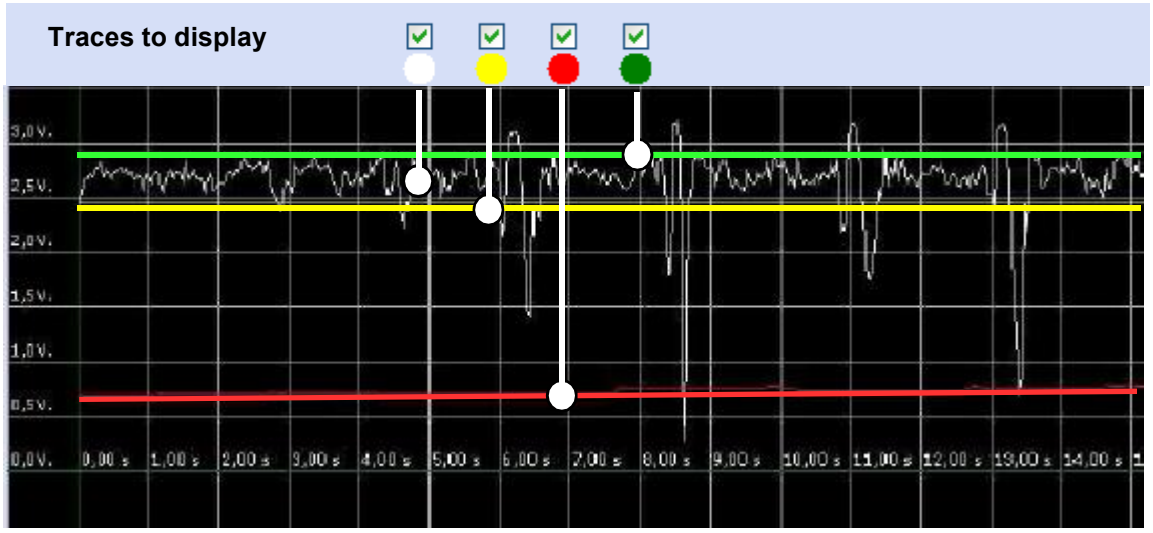

White line: it indicates the signal received from the barrier
Red line: it indicates the set threshold alarm
Green/yellow line: it indicates the valid signal threshold; the signals inside the two lines do not start the integration circuit of the signal (compensation)

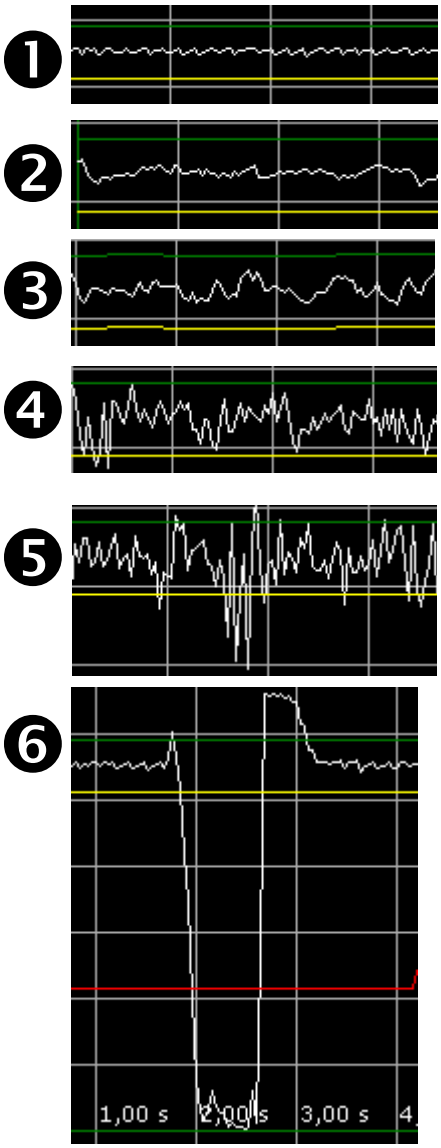

Signal received

The quality of the signal depends on many factors, mainly environmental. A stable installation passes through the research for minimum disturbance on the barrier. For a correct installation, it is important to keep away all those objects that might oscillate in the presence of wind, for example, hedges, branches, metal nets, etc. It is some times sufficient to slightly adjust both pairs from the opposite side compared to the possible disturbance to make the barrier stable, being careful that this does not jeopardise the signal level.

EXAMPLES OF RECEIVED SIGNALS

1. Good signal
2. Slightly disturbed signal
3. Disturbed signal - it is necessary to check if, by adjusting, the disturbance reduces.
4. Very disturbed signal - it is necessary to check there are no oscillating objects within the zone of interest of the barrier; it may be necessary to move the barriers away from the disturbance.
5. Very disturbed signal with accentuated risk of unwanted alarms.
6. Alarm signal.

ENG

Sensitivity management

To obtain maximum possibility of managing the barrier settings, **we recommend setting the SENS trimmer on the receiver at halfway of its run.**
This setting on the barrier allows the complete management of the sensitivity, even with connection from PC.
The graphic displaying is had by checking the position of the RED line on the oscilloscope. The closest the line to the upper part and, therefore, to the barrier signal (white line), the more sensitivity increases.
The numerical indications (127 / - 127) indicate by how much, in percentage, the signal increases or decreases, compared to the trimmer position adjusted in barrier.
The setting at (0) zero, displays the exact adjustment of the sensitivity on the barrier without any influence by the management software.

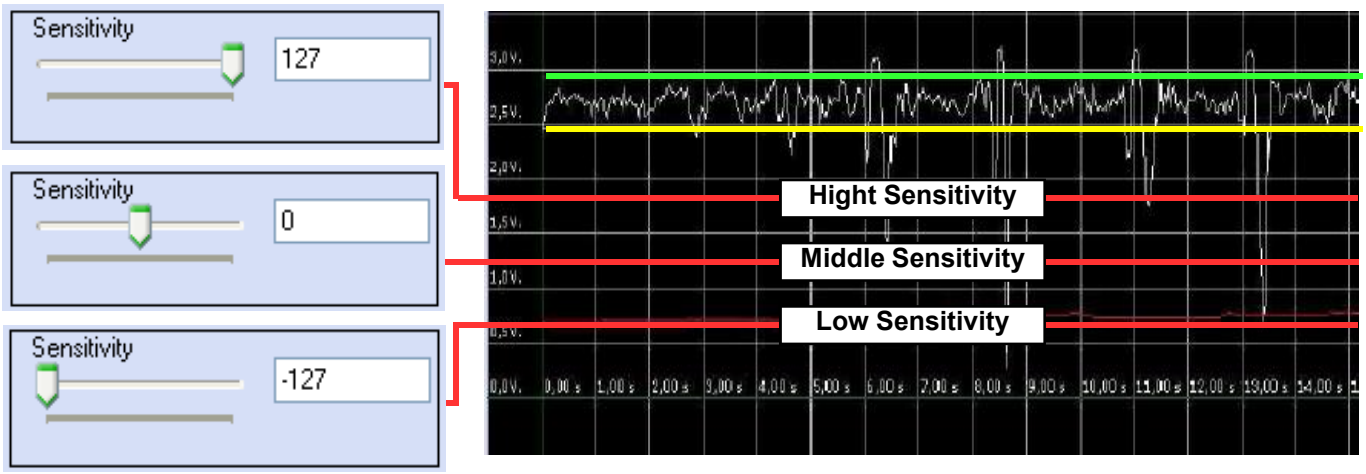

Compensation management

To obtain maximum possibility of managing the barrier settings, **we recommend setting the COMP trimmer on the receiver at halfway of its run.**
This setting on the barrier allows the complete management of the compensation, even with connection from PC.
The "Compensation" value (xx) indicates that the alarm threshold line (Red line) rises by xx Volts per second only when the microwave signal is disturbed enough to come out from the window fixed by the two yellow and green lines.
The numerical indications (127 / - 127) indicate by how much compensation increases or decreases, compared to the trimmer position adjusted in barrier.
The setting at (0) zero, displays the exact adjustment of the compensation on the barrier without any influence by the management software.

Cursor position	Compensation V/sec.	Description
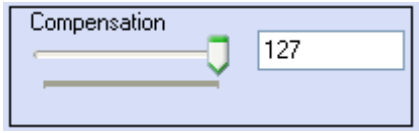		High compensation intervention.
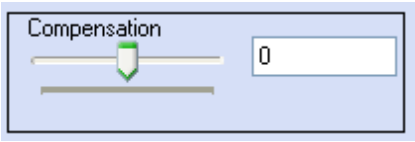		Average compensation intervention.
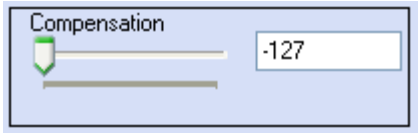		Compensation does not intervene.

ENG

Valid signal threshold management

This particular function, called WIND UP can be programmed only with the use of the HPSOFT software; it enables selection of the intervention zone of the barrier. It is possible to virtually reduce the analysis lobe, enabling to select all those situations that might create system instability. Often the generated lobe interests lateral zones where, the presence of hedges, metal nets or other, create continuous disturbance. The WIND UP function enables modulating the lobe at software level, until it becomes 20%-30% smaller than that declared. Usually the lobe creates a sort of cigar effect between TX and RX; by activating the WIND UP function, the cylindrical shape of the lobe will be amended creating a real and proper ellipse.
This function ensures that the compensation is not activated for signals inside the yellow and green lines, indicating the valid signal threshold.
The signal is considered valid when it overcomes the reference lines.
The graphic displaying is had by checking the position of the YELLOW AND GREEN lines on the oscilloscope. The greater the distance between the lines, the more the barrier rejects signals that would activate compensation with factory adjustments.
The numerical indications (15 - 30 - 60) indicate by how much the valid signal threshold of the barrier increases or decreases.

Graphic displaying on the management software.

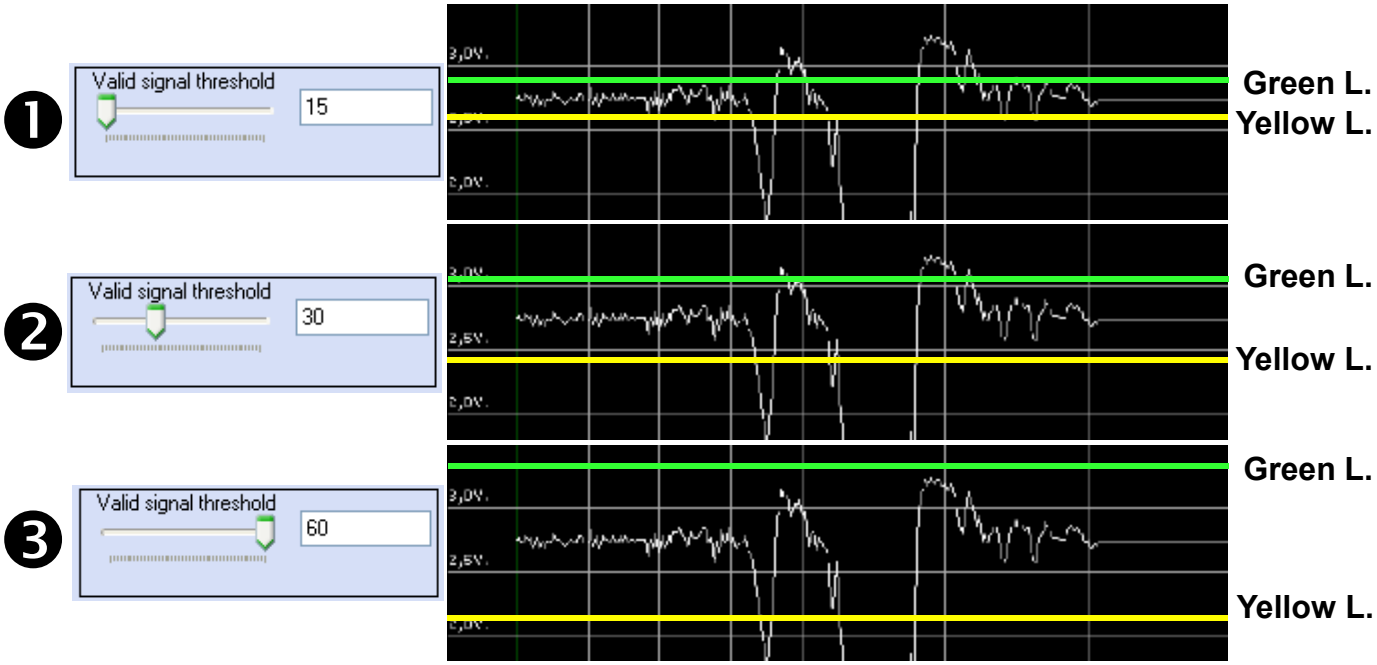

Graphic indication of the possible reduction of the signal threshold.
The indications below are merely indicative. Only a field test will precisely indicate the coverage zone and the valid signal thresholds.

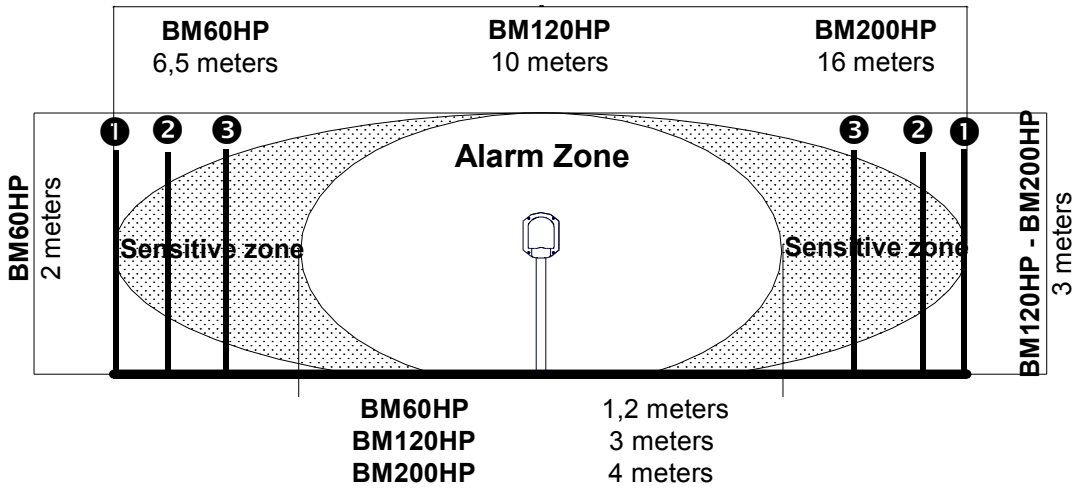

E N G

Detection mode

The possibility of alternating between the two functioning methods is possible only with the use of the HPSOFT software.

Detection mode **NORMAL**: as the term indicates, the barrier behaves as describes up to now, generating the alarm when the signal drops below the sensitivity threshold line and this does not coincide with the waveforms customised library, relating to possible "False alarms".

Detection mode **ALARM IDENTIFY**: the barrier will go in alarm only if the detected signal coincides with one of those recorded in the waveforms customised library as "real alarm".
This detection mode can be used when wanting to detect only particular types of crossings. To use this opportunity, carry out a series of passages to generate alarms. Once a sufficient number of alarm signals have been caused, check the "events history" in barrier and transfer the alarm signals on to the "real alarm" customised library.
The barrier will then generate the alarm only for signals similar to those saved in this library; every other signal will not generate an alarm.
This solution can be of interest if wanting to detect only the transiting of heavy means (cars/ articulated lorries, etc.), but not the transiting of persons or other.

E
N
G

Synoptic panel

Access to this menu imposes to choose the type of connection; USB - PSTN/GSM.
For a **connection in local** it is necessary:
1- to power the barriers
2- to connect the barrier receiver to the computer using the USB connection.
note: if first connection, carry out the drivers loading procedure for the recognition of the peripheral.
3- to select the barrier address on HPSOFT and then choose "connect"

Once connected, it will be possible to display in real time, the information relating to all connected barriers.
If we were connected to a barrier in USB its status would be verified, but if we were connected to the serial satellite, we would be able to see the status of all active barriers in the system.

Displayed elements:
- Barrier's time and date settings
- power supply
- Test point
- Temperature in barrier
- Barrier status: Alarm - Tamper - Disqualification

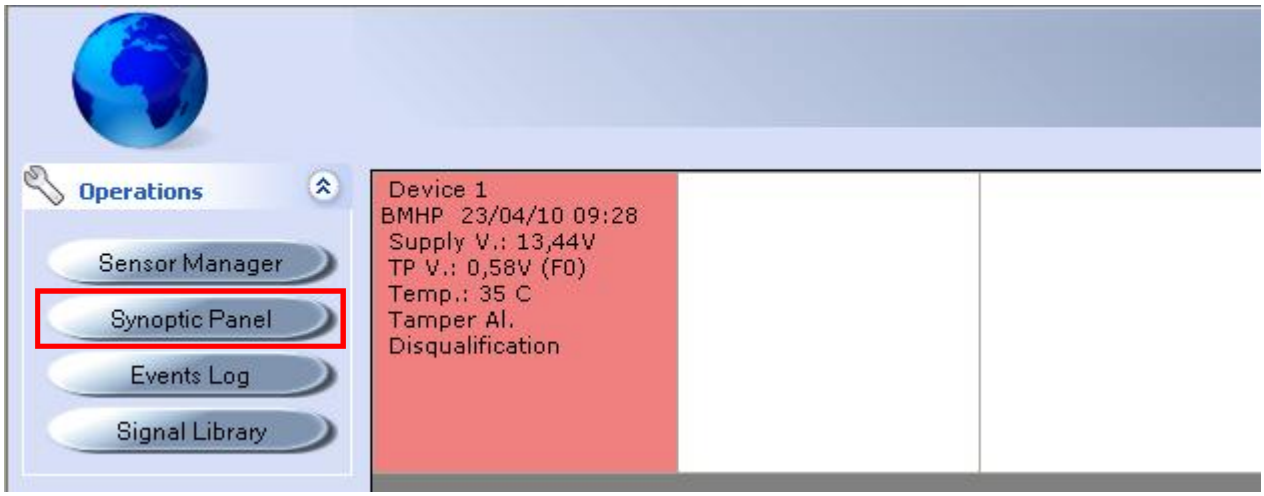

Events History

Access to this menu imposes to choose the type of connection; USB - PSTN/GSM.
For a connection in local it is necessary:
1- to power the barriers
2- to connect the barrier receiver to the computer using the USB connection.
note: if first connection, carry out the drivers loading procedure for the recognition of the peripheral.
3- to select the barrier address on HPSOFT and then choose "connect"

Once connected, access will be gained to the alarm events history recorded in barrier.

Data loading procedure

1- Select the satellite - the barrier: "current satellite"-"current detector"
2-Define the number of events to load, with a maximum of 3840: "Max n. events"
3- Start the process: press "Load Record List"
4- The events complete with Record Number, Date and time, will be displayed.

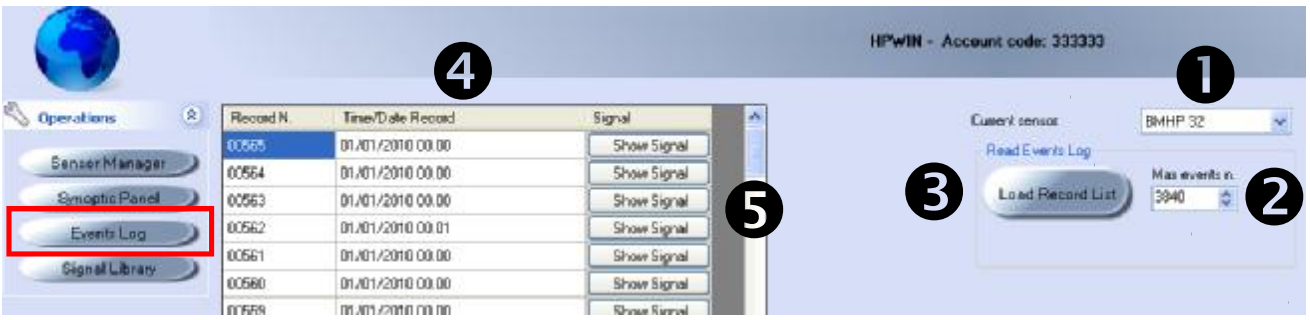

Signals displaying procedure

5- 5- Click on show signal; the software will load the information directly from the barrier
The displaying is complete of certain information recorded at the time of alarm:
- Alarm signal - Test Point - Power supply - Temperature.
6- Press Ok to close the screen

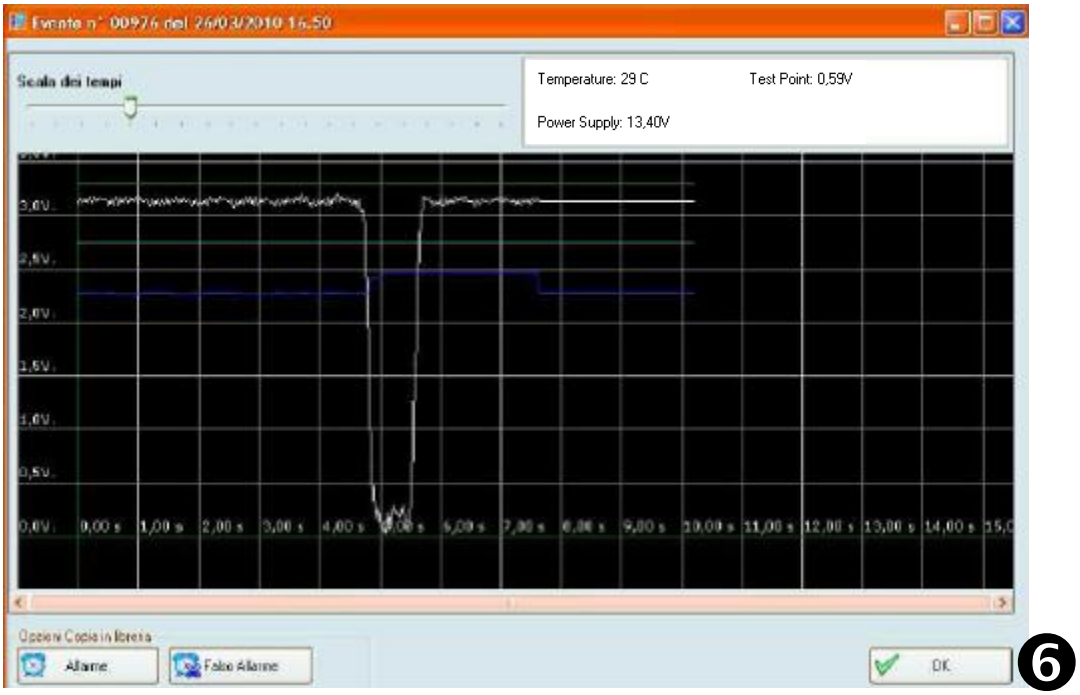

ENG

ENG

"False Alarm" library customisation

It is possible to create a waveforms customised archive to modulate the reply of the barrier depending on the environmental contexts.
The signals transferred in the archive called "False Alarm", are verified by the microprocessor before activating the real and proper alarm signal. If there were a correspondence between the recorded signal and the generated waveform, the barrier will not activate any signal, considering the event a false alarm.
We recommend setting in this archive only the ascertained false alarm signals.

Procedure:
1- Click on "False Alarm"; it will be requested to confirm the operation.
2- Press **Yes** to confirm; the wording "sample added to the library with success" confirms the operation. If the procedure is rejected, it means that signal is not recognised among those that can be customised.
3- Press **No** to desert the procedure

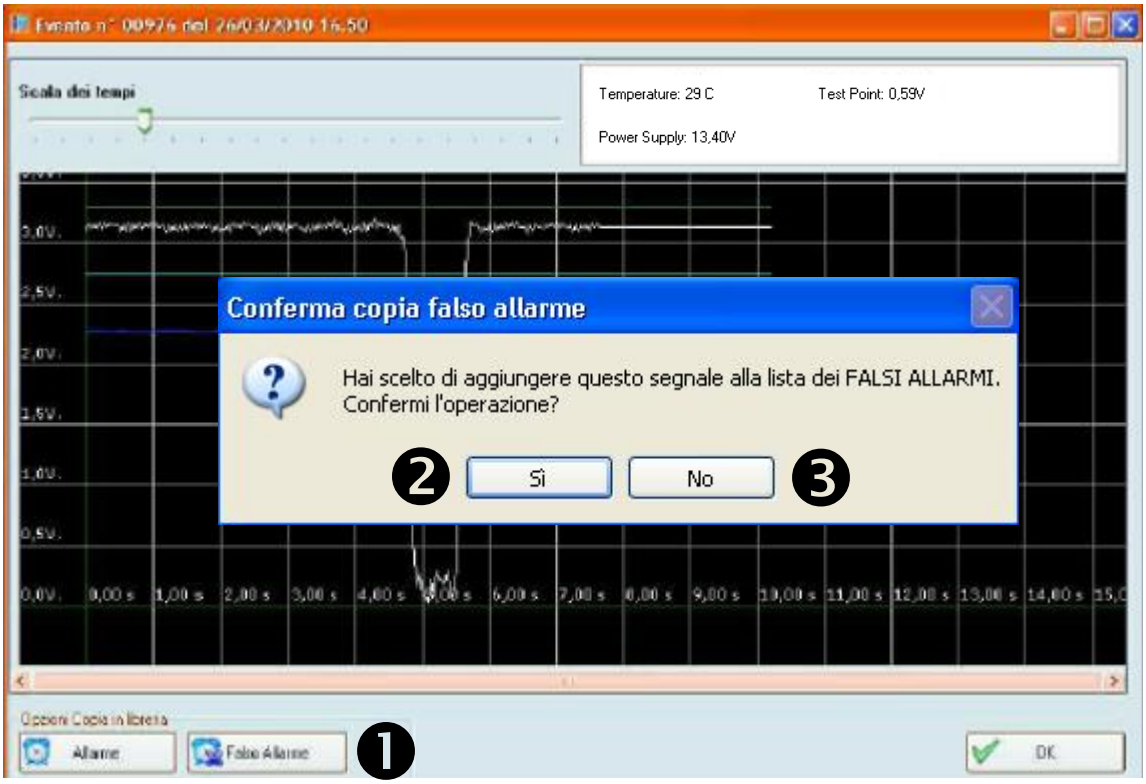

"Alarm" library customisation

This library is linked to the detection mode of the barrier.
The barrier checks this archive when the barrier is set in "ALARM IDENTIFY" detection mode; the barrier will be alarmed only if the detected signal coincides with one of those recorded in this archive.

Procedure:
1- Click on "Alarm"; it will be requested to confirm the operation.
2- Press **Yes** to confirm; the wording "sample added to the library with success" confirms the operation.
3- Press **No** to desert the procedure

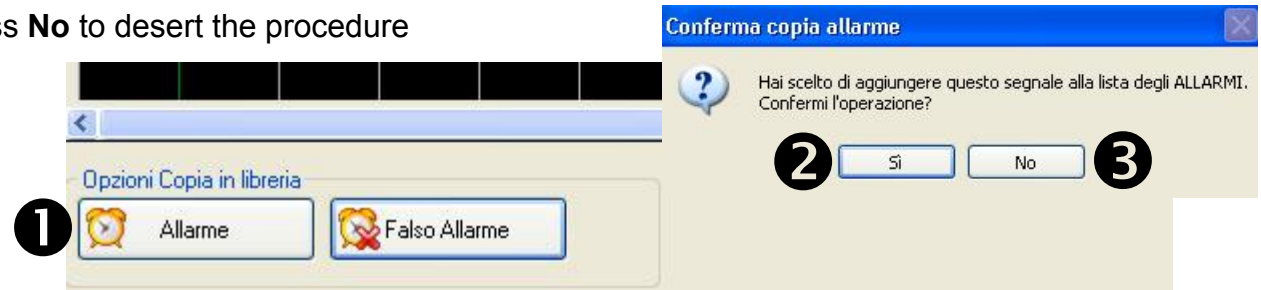

Signals library

Access to this menu imposes to choose the type of connection; USB - PSTN/GSM.
For a **connection in local** it is necessary:
1- to power the barriers
2- to connect the barrier receiver to the computer using the USB connection.
note: if first connection, carry out the drivers loading procedure for the recognition of the peripheral.
3- to select the barrier address on HPSOFT and then choose "connect"

Once connected, access is gained to the library of signals recorded in barrier by the installer. Signals considered "FALSE ALARM" and others considered as "ALARM" can be found in this customised library.

Symbols:

FALSE ALLARM

ALLARM

Data loading procedure

1- Select the satellite - the barrier: "current satellite"-"current detector"
2- Select which type of signal is to be loaded
3- Start the process: press "Load Record List"
4- The events complete of Record Number and "ALARM/FALSE ALARM" symbol will be displayed
5- To completely delete the signals library: press "Empty Library"

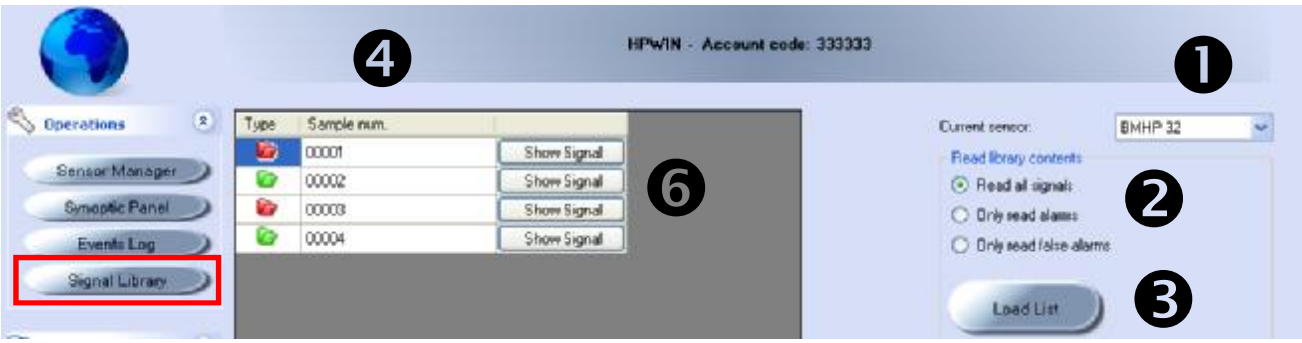

Signals displaying procedure

6- Click on show signal; the software will load the information directly from the barrier and the saved signal will be displayed.
7- Press Ok to close the screen
8- Press "Delete" to delete this signal from the library and confirm.
9- Confirm deletion of the signal.

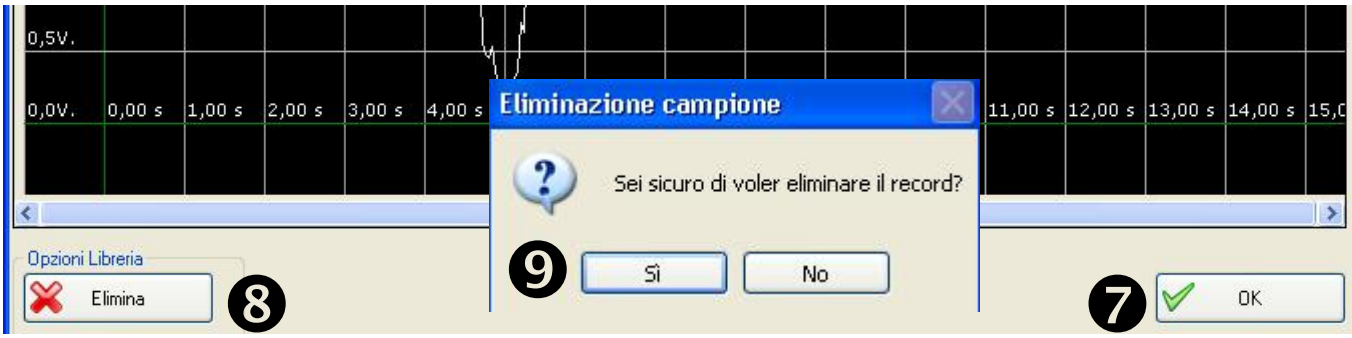

ENG

Recordings Archive

The archive of the recordings enables displaying the signals recorded by the installer on PC using the "recording" procedure described in the "Detectors Management" chapter.
By entering this archive, access will be gained to a database where the various files will be saved with date/time, description and duration of recording.

Data access procedure

1- Select: "Recordings Archive"
2- Select the file to be loaded
3- To scroll the oscilloscope trace, drag the cursor found on the lower section

System notes

In this section it is possible to load an image reminding us, for example, where the barriers are installed. It is also possible to enter notes on the editable paragraph.

Access procedure

1- Select: "System Notes"
2- Select "Change image" to load a file.
3- "Select "save notes" to confirm

Upgrade Firmware

In this section it is possible to upgrade the barrier firmware. This procedure is only necessary if AVS Electronics issues upgraded firmware versions. There is a section on the site dedicated to the DOWNLOAD of files (http://www.avselectronics.com/PHP/login.php).

Access procedure

1- Select: "Upgrade Firmware"
2- Select the barrier to be upgraded
3- Select "Upgrade"
4- Select the file and confirm

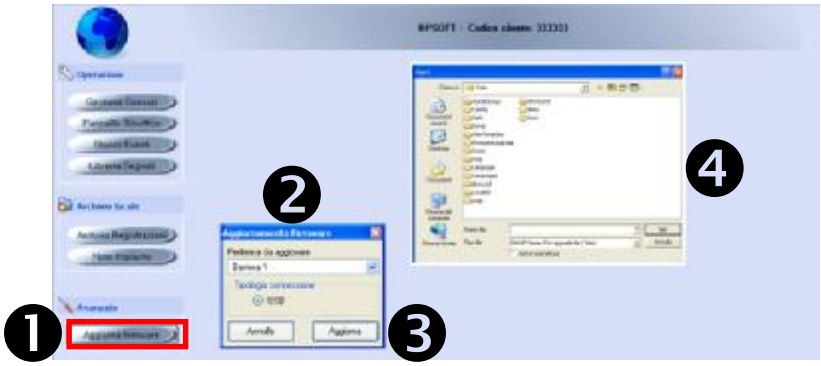

ENG

Information in conformity to the Directive 1999/5/CEE for model BM_HP

The product here described is in conformity to the essential prescriptions of the Directive 1999/5/CEE (R&TTE) on the radio-transmitting devices of low power and on the use of frequencies of the radioelectrical spectrum, in accordance with CEPT 70-03 recommandation.

Trade mark	AVS ELECTRONICS
Model	BM60HP - BM120HP - BM200HP BM60HPVAC - BM120HPVAC - BM200HPVAC
Working frequency	10,525Ghz
Type of supplying	Continuos current
Nominal tension	12 V
Nominal current (TX and RX)	131 mA
Countries of use in the European Community	I - E - B - GR - P
Date	March 2010

NOTICE:
This device complies with Part 15 of the FCC Rules.
Operation is subject to the following two conditions:
(1) this device may not cause harmful interference, and
(2) this device must accept any interference received, including interference that may cause undesired operation.

Changes or modifications made to this equipment not expressly approved by AVS Electronics S.p.A. may void the FCC authorization to operate this equipment.

NOTE: This equipment has been tested and found to comply with the limits for a Class B digital device, pursuant to Part 15 of the FCC Rules. These limits are designed to provide reasonable protection against harmful interference in a residential installation. This equipment generates, uses and can radiate radio frequency energy and, if not installed and used in accordance with the instructions, may cause harmful interference to radio communications. However, there is no guarantee that interference will not occur in a particular installation. If this equipment does cause harmful interference to radio or television reception, which can be determined by turning the equipment off and on, the user is encouraged to try to correct the interference by one or more of the following measures:

- Reorient or relocate the receiving antenna.
- Increase the separation between the equipment and receiver.
- Connect the equipment into an outlet on a circuit different from that to which the receiver is connected.
- Consult the dealer or an experienced radio/TV technician for help.

AVS electronics

Sistema di Qualità certificato ISO9001:2008

CE

DICHIARAZIONE DI CONFORMITÀ
(MANUFACTURERS DECLARATION OF CONFORMITY)

Costruttore : *(Manufacturer)*	AVS ELECTRONICS SPA
Indirizzo : *(Address)*	Via Valsugana, 63 – 35010 Curtarolo (PD) – ITALY

DICHIARA CHE LA SEGUENTE APPARECCHIATURA
(DECLARES THAT THE FOLLOWING EQUIPMENT)

Nome dell'Apparecchiatura : *(Equipment Name)*	BM60HP – BM120HP – BM200HP
Tipo di Apparecchiatura : *(Type of Equipment)*	RIVELATORE BARRIERA A MICROONDE PER ESTERNO *(OUTDOOR MICROWAVE SPAN ALARM SYSTEM)*
Modello : *(Model)*	
Anno di Costruzione : *(Year of Manufacture)*	2010

RISULTA CONFORME CON QUANTO PREVISTO DALLE SEGUENTI DIRETTIVE COMUNITARIE:
(IS IN ACCORDANCE WITH THE FOLLOWING COMUNITY DIRECTIVES)

2004/108/EC (EMC)	1999/05/EC (R&TTE)
2006/95/EC (LVD)	

E CHE SONO STATE APPLICATE LE SEGUENTI NORMATIVE
(APPLYING THE FOLLOWING NORMS OR STANDARDS)

EN 300440 – 2	
EN 301489 – 3	
EN 50130 – 4	
EN 60950 – 1	

IDENTIFICATORE DI CLASSE DEL DISPOSITIVO (per apparati RF regolamentati dalla direttiva R&TTE)
(Equipment class identifier (RF products falling under the scope of R&TTE))

☐ Not Applicable ☐ None (class 1 product) ☒ CE (class 2 product)

Il costruttore dichiara sotto la propria responsabilità che questo prodotto è conforme alla direttiva 93/68/EEC (marcatura) e soddisfa i requisiti essenziali e altre prescrizioni rilevanti della direttiva 1999/5/EC (R&TTE) in base ai risultati dei test condotti usando le normative (non) armonizzate in accordo con le Direttive sopracitate.
(We declare under our sole responsibility that this product is in conformity with directive 93/68/EEC (Marking) and/or complies to the essential requirements and all other relevant provisions of the 1999/5/EC (R&TTE) based on test results using (non) harmonized standards in accordance with the Directives mentioned)

Luogo *(Place)* : Curtarolo

Data *(Date)* : Jul 2010

Firma *(Signature)*

Nome *(Name)*: G. BARO

Amministratore *(Managing Director)*

Technical Characteristics

	BM60HP BM60HPVAC	BM120HP BM120HPVAC	BM200HP BM200HPVAC
Max range	60 meters	120 meters	200 meters
Nominal tension	12 V ⎓	12 V ⎓	12 V ⎓
Min tension	11.5 V ⎓	11.5 V ⎓	11.5 V ⎓
Max tension	15 V ⎓	15 V ⎓	15 V ⎓
Consumption during quiet	TX : 31 mA RX : 100 mA	TX : 31 mA RX : 100 mA	TX : 31 mA RX : 100 mA
Consumption during alarm	TX : 31 mA RX : 100 mA	TX : 31 mA RX : 100 mA	TX : 31 mA RX : 100 mA
Size: (P x L x H)	150 x 105 x 195	136 x 225 x 225	136 x 225 x 225
Block of detector relay	by appointed terminal B		
Auxiliary input	Negative input for detector		
Alarm output	n.c. exchange with 500 mA range at 12 V		
Disqualification output	normally closed good reception control exchange of signal with range 500 mA at 12 V		
Tamper output	n.c. exchange with 500 mA range at 12 V		
Optional kit for anti-removal (AMP)	no	yes	yes
Serial output - RS485	yes		
Selectable serial addresses	Maximum 32		
Events memory	Up to 3600 events recorded with time and date		
Stop recording with system disarmed	yes		
Filter false alarms	yes		
Test Point output	for checking of signal received		
Mirowave working frequency	10,525 GHz (+/-20MHz)		
Modulation	in 5 different channels, selection through dip-switch		
Irradiation of RF power	peak: 25 dBm		
Temperature conditions	from - 20°C to + 55°C For installation outdoor, the use of the optional heating kit (Term2) is suggested .		
IP Protection	IP 34		
Given within	Bracket for fixation on 40 mm tube		

E
N
G

AVS electronics

Via Valsugana, 63
35010 (Padova) ITALY
Tel. +39 049 9698 411 / Fax. +39 049 9698 407
avs@avselectronics.it
www.avselectronics.com
Assistenza Tecnica: +39 049 9698 444
support@avselectronics.it

AVS ELECTRONICS S.p.A. reserves the right to modify the technical and esthetical characteristic of the products at any time.