Test Report 19-1-0173606T01
EIRP Measurements of Different Antenna Versions when Installed on a Car

Deutsche Akkreditierungsstelle
D-PL-12047-01-01
D-PL-12047-01-03
D-PL-12047-01-04

Number of pages:	15	**Date of Report:**	2021-Oct-04
Testing company:	CETECOM GmbH Im Teelbruch 116 45219 Essen Germany Tel. + 49 (0) 20 54 / 95 19-0 Fax: + 49 (0) 20 54 / 95 19-150	**Applicant:**	Continental Advanced Antenna GmbH Römerring 1, 31137 Hildesheim, Germany
Test Object / Tested Device(s):	**In glass antenna of a convertible used with RKE232E1 and RKE232J1**		

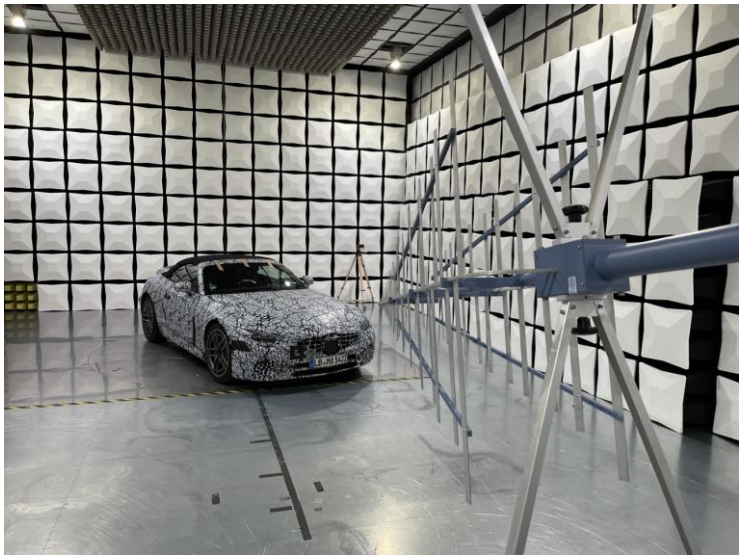

Frequency Range:	**434 MHz and 315 MHz**
EIRP Tests according to:	**FCC Regulations: Title 47 CFR, Chapter I, Subchapter A, Subpart C: §15.231(b)** **ISED Regulations: RSS-210, Issue 10, Annex A** **European Regulations: EN 300 220-2 V3.2.1 and EN 300 220-1 V3.1.1** **Japan MIC Notification 88 of 2004 (Annex 22-1)**

Signatures:

Ninovic Perez 2021.10.04 14:06:05 + 02'00'	Guangcheng Huang 2021.10.04 14:00:51 + 02'00'
Dipl.-Ing. Ninovic Perez Authorization of Test Report	**Guangcheng Huang** Test Execution and Author of Report

Table of Contents

1 General information 3
1.1 Disclaimer and Notes 3
1.2 Summary of Test Results 3
2 Administrative Data 4
2.1 Identification of Entity Providing the Service 4
2.2 General Limits for Environmental Conditions 4
2.3 Organizational Items 4
2.4 Customer Details 4
2.5 Equipment Under Test (EUT): Type and Short Descriptions 5
2.6 Auxiliary Equipment: Type and Short Descriptions 5
3 General Test Setup and Test Method 8
3.1 Set up 8
3.2 Test Procedure 9
3.3 Test Parameters 9
3.4 Test of impact of RBW and Detector Type 9
3.5 Comparison of CW Modules with Modules Providing a Modulated Signal 9
4 Measurement Results 10
4.1 Typical Antenna Pattern for 434 MHz and 315 MHz 10
4.2 Determination of the Worst Case Scenario 11
4.2.1 FCC and ISED Canada Related Test Result 12
4.2.2 EN Related Test Result 13
4.2.3 Japan Approval Related Test Result 14
5 Equipment lists 15
6 Measurement Uncertainty 15
7 References 15

1 General information

1.1 Disclaimer and Notes

The test results of this test report relate exclusively to the test item specified in this test report. CETECOM does not assume responsibility for any conclusions and generalizations drawn from the test results with regard to other specimens or samples of the type of the equipment represented by the test item. The test report may only be reproduced or published in full. Reproduction or publication of extracts from the report requires the prior written approval of CETECOM.
The testing service provided by CETECOM has been rendered under the current "General Terms and Conditions for CETECOM". CETECOM will not be liable for any loss or damage resulting from false, inaccurate, inappropriate or incomplete product information provided by the customer. Under no circumstances does the CETECOM test report include any endorsement or warranty regarding the functionality, quality or performance of any other product or service provided. Under no circumstances does the CETECOM test report include or imply any product or service warranties from CETECOM, including, without limitation, any implied warranties of merchantability, fitness for purpose, or non-infringement, all of which are expressly disclaimed by CETECOM. All rights and remedies regarding vendor's products and services for which CETECOM has prepared this test report shall be provided by the party offering such products or services and not by CETECOM. In no case this test report can be considered as a Letter of Approval. This test report is electronically signed and valid without handwritten signature. For verification of the electronic signatures, the public keys can be requested at the testing laboratory. The documentation of the testing performed on the tested devices is archived for 10 years at CETECOM.

1.2 Summary of Test Results

The EIRP data of a reference antenna used in the basic homologation of the RKE module has been compared to for an in glass antenna system used at a convertible. This in glass antenna is an antenna system consists of two different antennas: ANT1 and ANT2. The purpose of this investigation was about to identify the worst case scenario to be used for final RSE tests and to compare with the data used for homologation (using a reference antenna). The pattern tests to find the maximum radiation have been carried out in a test mode (CW mode). For those worst case scenarios EIRP measurements have been carried out according the FCC / ISED, EN and Japan Test standards applying the correct modulation and module RF power settings. The results also in respect to EIRP values used for the homologation based on the reference antenna are summarized below.

Frequency Band	The maximum EIRP has been found at
434 MHz	ANT2, channel 2, measurement antenna height: 2.0 m, turn table position: -15°
315 MHz	ANT2, channel 2, measurement antenna height: 3.0 m, turn table position: +8°

Tab. 1: Scenarios where the maximum EIRP value was found.

Test	Measured	Limit	Test results for homologation using a reference antenna (see [2], [3] and [4])
FCC and ISED	77.3 dBµV/m	80.8 dBµV/m	80.62 dBµV/m
Europe	5.2 dBm EIRP (3.1 dBm ERP)	10 dBm ERP	8.71 dBm
Japan	-9.5 dBm EIRP	-6 dBm EIRP	-6.05 dBm

Tab. 2: EIRP test result overview.

2 Administrative Data

2.1 Identification of Entity Providing the Service

Company address:	CETECOM GmbH / Im Teelbruch 116 / 45219 Essen / Germany
Internet site:	www.cetecom.com
Responsible for laboratory:	Mr. Volker Briddigkeit
Accreditation scope:	DAkkS Webpage
Test location:	CETECOM GmbH / Mündelheimer Weg 35 / 40472 Düsseldorf / Germany

2.2 General Limits for Environmental Conditions

Temperature:	22±2 °C
Humidity:	45 ± 15% rH

2.3 Organizational Items

CETECOM project number:	19-1-0173606T01
Test Date(s):	2021-Sep-06
Witness during tests:	Christian Magg < christian.magg@continental-corporation.com>
Responsible for test report:	Guangcheng Huang
Date of report:	2021-Oct-04

2.4 Customer Details

Customer address:	Continental Advanced Antenna GmbH / Römerring 1, 31137 Hildesheim, Germany
Customer internet site:	www. continental.com
Contact person:	Christian Magg < christian.magg@continental-corporation.com>
PO number:	4500027166 / 22.02.2021

2.5 Equipment Under Test (EUT): Type and Short Descriptions

Short description	PMT No.	Product / EUT	Mode / Type	S/N	HW status	FW status
EUT A	S01	Mercedes-Benz car, convertible with integrated in-glass antenna system	BR232 CABRIO	W1K2324811F000288	--	--
EUT B	S18	RKE Module US	RKE232E1 A232 905 1101	547	13620027B02V02	11.31
EUT C	S11	RKE Module Japan	RKE232J1 A232 905 1201	126	13620028B02V02	11.31
EUT D	S35	RKE Module EN	RKE232E1 A232 905 1101	544	13620027B02V02	11.31

Tab. 1: EUT details.

2.6 Auxiliary Equipment: Type and Short Descriptions

Short description	PMT No.	Auxiliary Equipment	Type	S/N	HW status	SW status
AE 01	S22	Testbox RKE232	USA	180401C06	--	RKE223_V7.0
AE 03	S21	Testbox RKE232JP	Japan	180401C01	--	RKE223_V7.0
AE 04	S39	Testbox RKE232	EN	180401C02	--	RKE223_V7.0
AE 05	S15	CW RKE Module	FCC-CW (0xE2) ANT1, Channel 1	545	13620027B02V02	11.31
AE 06	S13	CW RKE Module	FCC-CW (0xE2) ANT1, Channel 2	538		
AE 07	S16	CW RKE Module	FCC-CW (0xE2) ANT1, Channel 3	534		
AE 08	S14	CW RKE Module	FCC-CW (0xE2) ANT2, Channel 1	528		
AE 09	S12	CW RKE Module	FCC-CW (0xE2) ANT2, Channel 2	546		
AE 10	S17	CW RKE Module	FCC-CW (0xE2) ANT2, Channel 3	536		
AE 11	S05	CW RKE Module	JP-CW (0x32) ANT1, Channel 1	118	13620028B02V02	
AE 12	S09	CW RKE Module	JP-CW (0x32) ANT1, Channel 2	114		
AE 13	S07	CW RKE Module	JP-CW (0x32) ANT1, Channel 3	112		
AE 14	S06	CW RKE Module	JP-CW (0x32) ANT2, Channel 1	117		
AE 15	S10	CW RKE Module	JP-CW (0x32) ANT2, Channel 2	140		
AE 16	S08	CW RKE Module	JP-CW (0x32) ANT2, Channel 3	116		
AE 17	S30	CW RKE Module	EN-CW (0x32) ANT1, Channel 1	531	13620027B02V02	
AE 18	S27	CW RKE Module	EN-CW (0x32) ANT1, Channel 2	499		
AE 19	S31	CW RKE Module	EN-CW (0x32) ANT1, Channel 3	510		
AE 20	S29	CW RKE Module	EN-CW (0x32) ANT2, Channel 1	532		
AE 21	S28	CW RKE Module	EN-CW (0x32) ANT2, Channel 2	508		
AE 22	S32	CW RKE Module	EN-CW (0x32) ANT2, Channel 3	498		

Tab. 2: Auxiliary equipment details.

Fig. 1: Photos of the car and it's in-glass-antenna system.

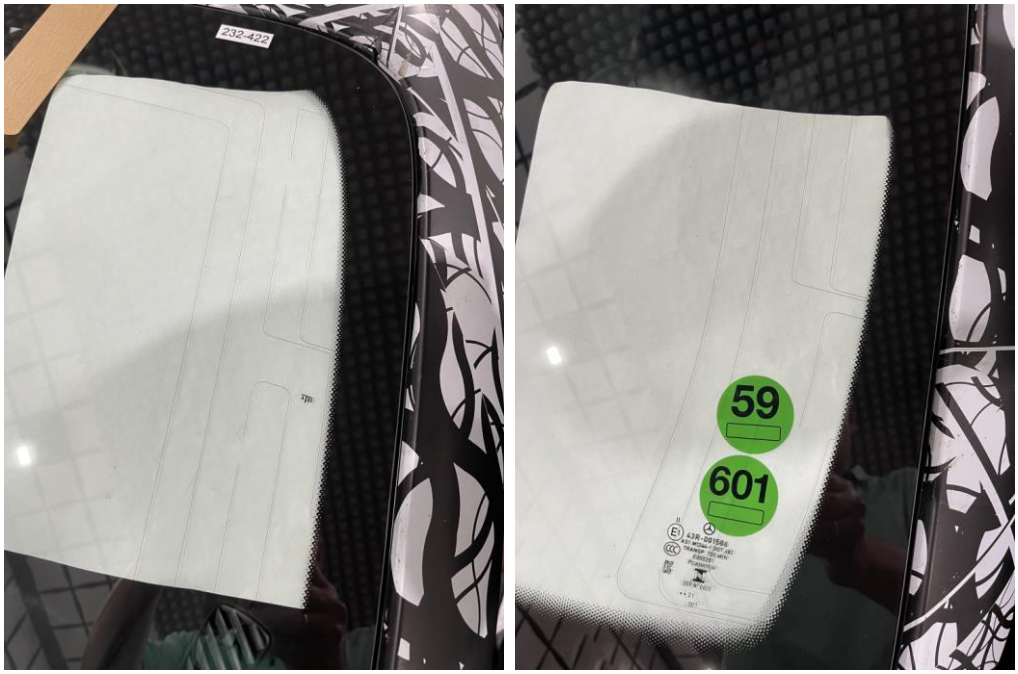

Fig. 2: Photos of the car and it's in-glass-antenna system details.

Fig. 3: Photos of the CW modules (on the left) and system providing the modulated signal (on the right) for USA.

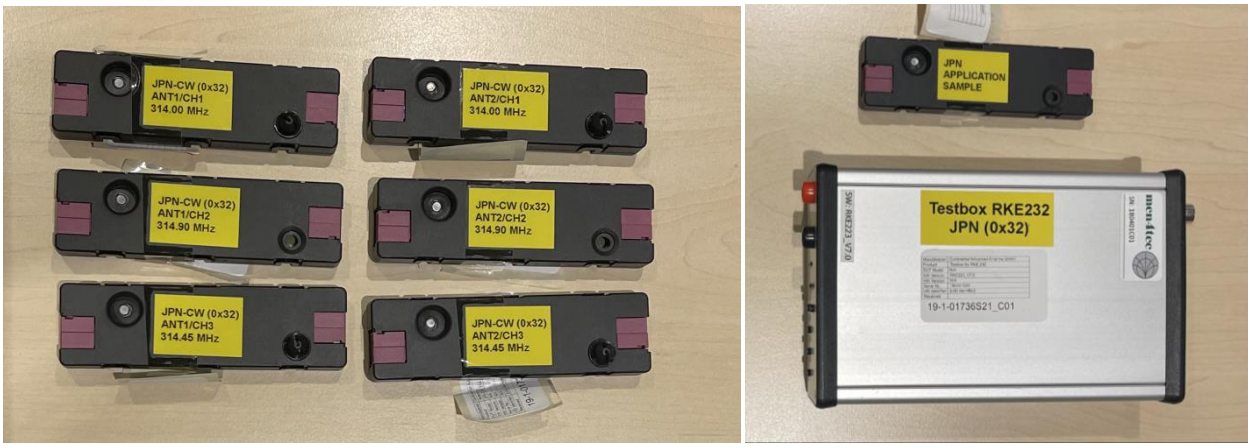

Fig. 4: Photos of the CW modules (on the left) and system providing the modulated signal (on the right) for Japan.

Fig. 5: Photos of the CW modules (on the left) and system providing the modulated signal (on the right) for EU.

3 General Test Setup and Test Method

3.1 Set up

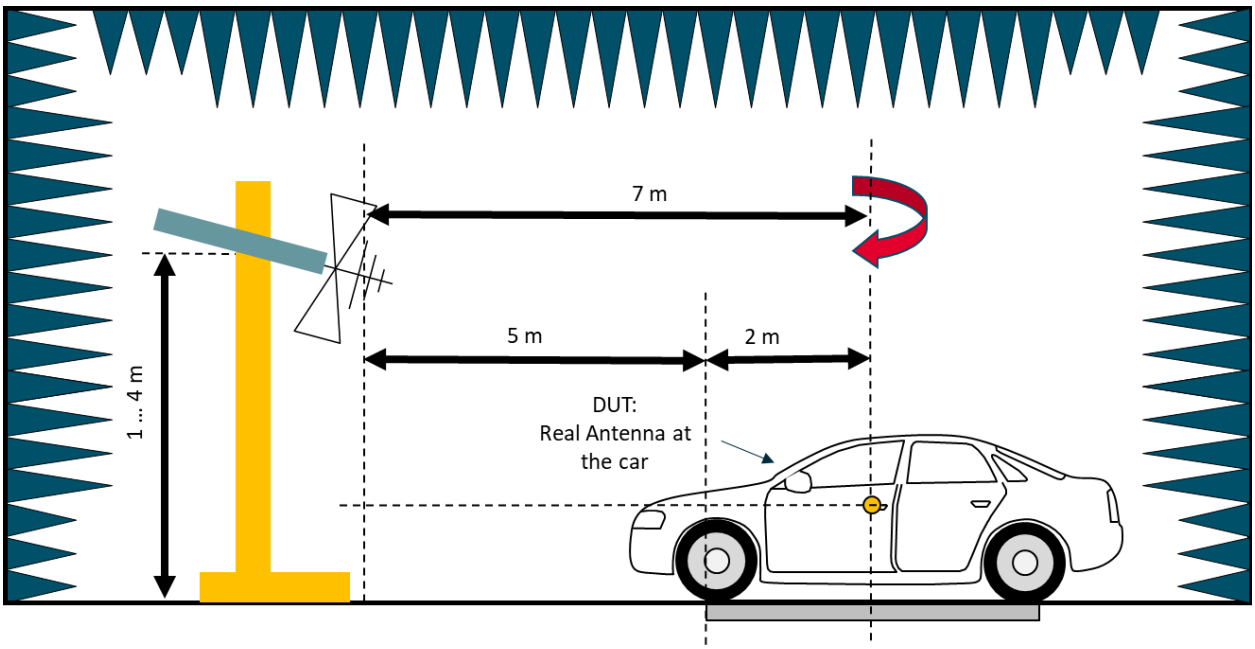

Fig. 6: Measurement set up using a movable antenna mast with tilt boresight (tilt) function.

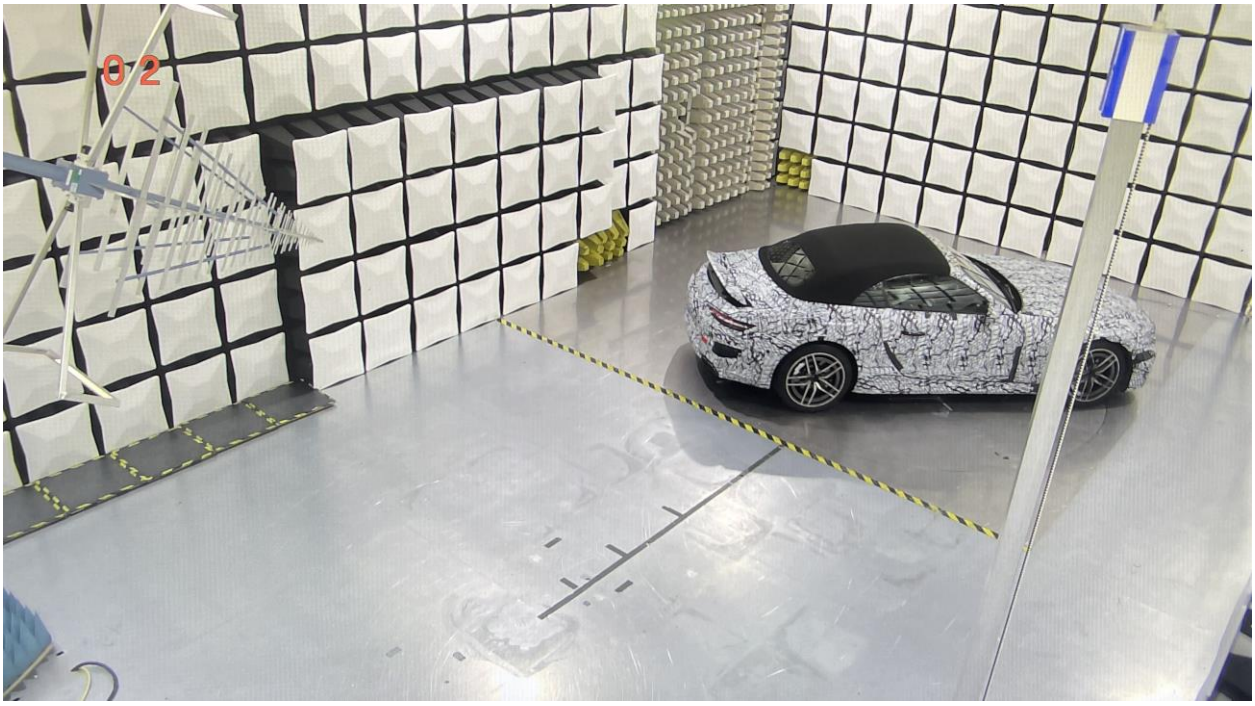

Fig. 7: Photo of set up with EUT.

Antenna measurements at cars are carried out in the CETECOM SAC5 chamber in Düsseldorf as shown in Fig. 6 and Fig. 7. A movable mast with an antenna tilt function and changeable polarization was used to gather data for different directions in respect to elevation, azimuth and polarization.

3.2 Test Procedure

1.) At one channel but for all antennas an all versions (FCC, EU and Japan) the antenna pattern has been measured to identify the worst case position in respect to antenna number, measurement antenna height, its polarization and turn table position. For those tests a CW test signal was used.
2.) In a next step at this position the correct modulated signal was applied and the signal frequency was changed. At three channels (low, mid and high) the appropriate EIRP values were measured to identify the channel with the highest emission.
3.) All other tests and final results relate to this "worst case scenario" and for modulated signals.
4.) The maximum EIRP values found at this "worst case scenarios" have been reported a final results (see Tab. 2) and can be considered as valid also for modules providing the modulated signal due to test results as stated in chapter 3.5.

3.3 Test Parameters

The following test procedure related parameter has been used:

- The car antenna was tested using modules operating at a fixed frequency in CW mode for measuring antenna pattern
- The turn table rotated between 0 and 360° and readings where gathered with an angular resolution of approx. 5°
- Both polarization are taken into account
- The antenna height was varied between 1 and 4 m in steps of 0.5 m (7 levels) representing an angular resolution in elevation of approximately 4°
- Out of the power measurements the antenna pattern was determined and the maximum EIRP values estimated.
- In order to be able to compare the data to appropriate limits (e.g. in dBµV/m @ 3 m), the measured data have been adjusted to the average values at a 3 m distance by:
    - taking into account the actual higher measurement distance (see Fig. 6), and
    - for calculating the correct average field strength and correct e.i.r.p. level, the timing results out of the report CETECOM_TR19_1_0173601T06a (FCC) and CETECOM_TR19_1_0173601T10a (Japan) have been applied:
        - for the FCC version a duty cycle results in a -17.33 dB correction,
        - for the Japan version at 315 MHz band a -11 dB correction, and
        - for the European variant no duty cycle has been taken into account (correction: 0 dB).
- Measurement bandwidth was 300 kHz and a RMS detector has been used. The impact of those settings is shown below in chapter 3.4.

3.4 Test of impact of RBW and Detector Type

RBW	RMS	Peak
100 KHz	-30.79	-30.77
300 KHz	-30.75	-30.74
1 MHz	-30.72	-30.70

Tab. 3: Max hold readings of the modulated signal with different resolution (RBW) - detector combinations.

3.5 Comparison of CW Modules with Modules Providing a Modulated Signal

Manual tests comparing CW modules (operating at fixed frequencies) with the module generating a modulated signal with duty cycle at adjustable frequencies have been found to be identical in respect to the maximum (max hold) signal levels within:

➔ ±0.10 dB for the worst case channel 2

➔ ±0.15 dB for the other channels.

4 Measurement Results

4.1 Typical Antenna Pattern for 434 MHz and 315 MHz

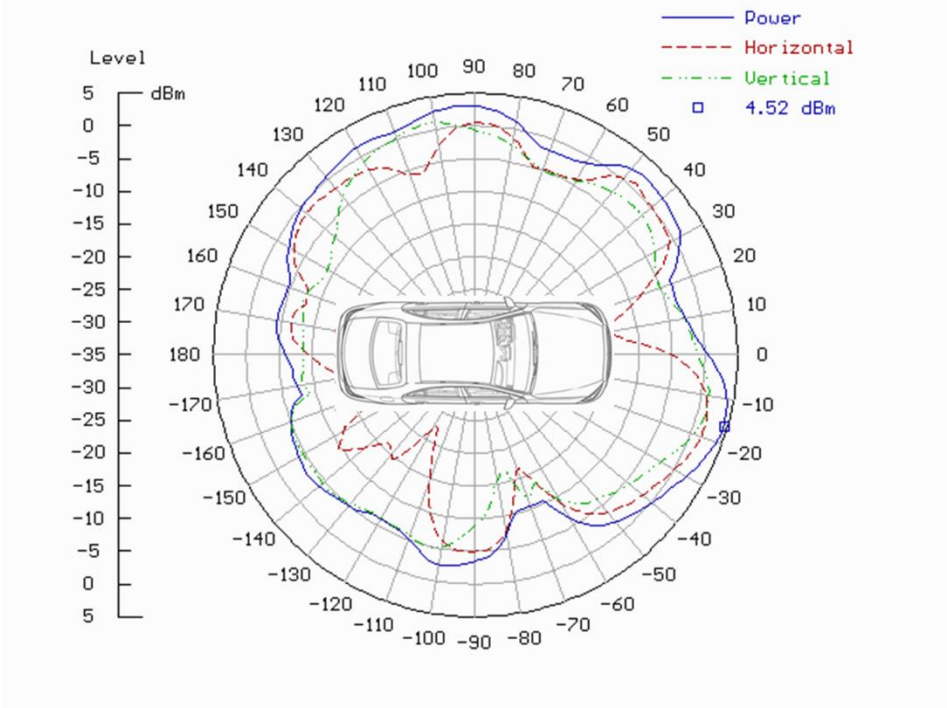

Fig. 8: Car orientation and example pattern found for 434 MHz (EU variant, ANT2 , channel 2, antenna height 4 m).

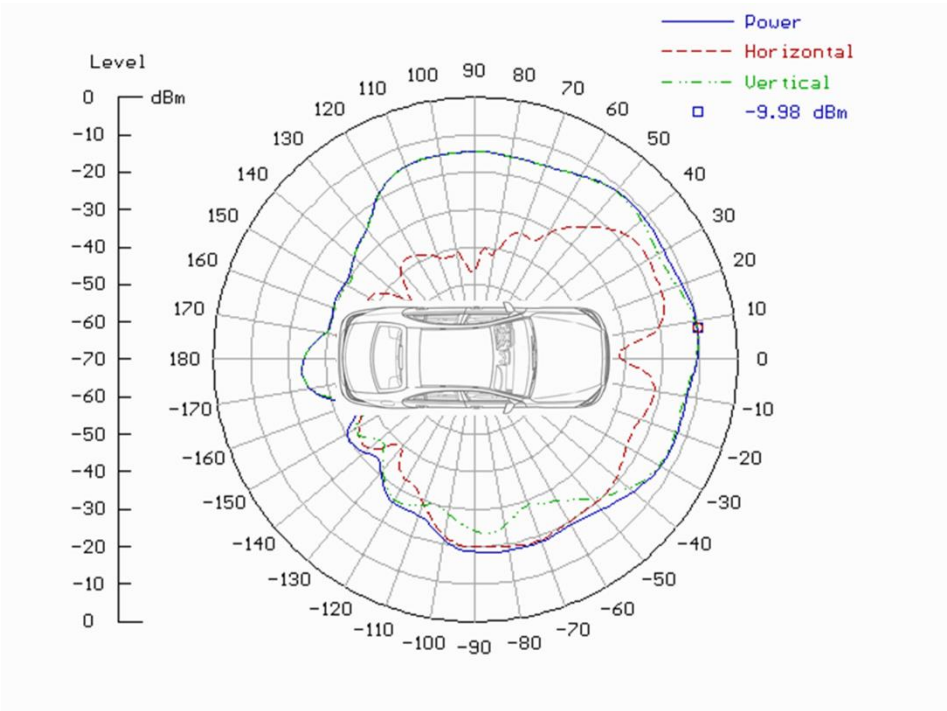

Fig. 9: Car orientation and example pattern found for 315 MHz (Japan variant, ANT1 , channel 2, antenna height 3 m).

4.2 Determination of the Worst Case Scenario

As described in chapter 3.2 antenna pattern results has been used to identify the position for the highest EIRP values in respect to EUT antenna element number, elevation, azimuth and polarization. The measured results are as below:

For the 434 MHz Band the maximum EIRP was found (for both antenna elements ANT1 and ANT2) at:

- vertical polarization,
- antenna height of 2 m, and
- azimuth = -17°.
- The frequency variation showed a radiation maximum at channel 2 and antenna 2.

Frequency	Channel	ANT1	ANT2
433.47 MHz	1	-4.42 dB	-1.93 dB
433.92 MHz	3	-2.97 dB	-0.84 dB
434.37 MHz	2	-1.93 dB	0.00 dB

Tab. 4: Relative EIRP values found for 434 MHz antenna version (modulated signals).

For the 315 MHz Band the maximum EIRP was found (for both antenna elements ANT1 and ANT2) at:

- vertical polarization,
- antenna height of 3 m, and
- azimuth = +8°.

- The frequency variation showed a radiation maximum at channel 2 and antenna 2.

Frequency	Channel	ANT1	ANT2
314.00 MHz	1	-3.52 dB	-2.38 dB
314.45 MHz	3	-4.25 dB	-3.08 dB
314.90 MHz	2	-0.76 dB	0.00 dB

Tab. 5: Relative EIRP values found for 315 MHz antenna version (modulated signals).

4.2.1 FCC and ISED Canada Related Test Result

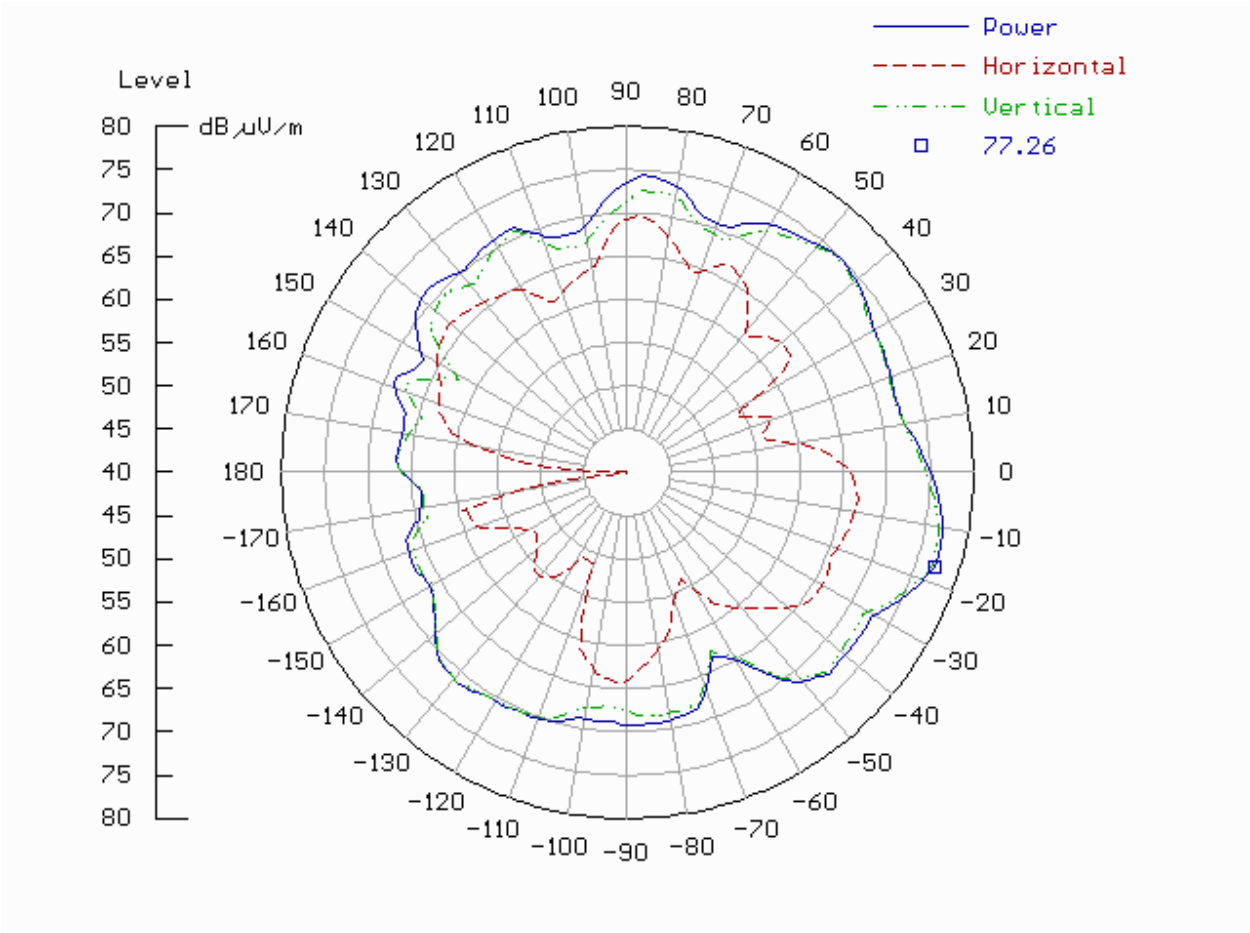

Fig. 10: Maximum EIRP value found for 434 MHz when using the FCC module (power setting: 0x2E), ANT2, channel 2 and measurement antenna height of 2.0 m.

4.2.2 EN Related Test Result

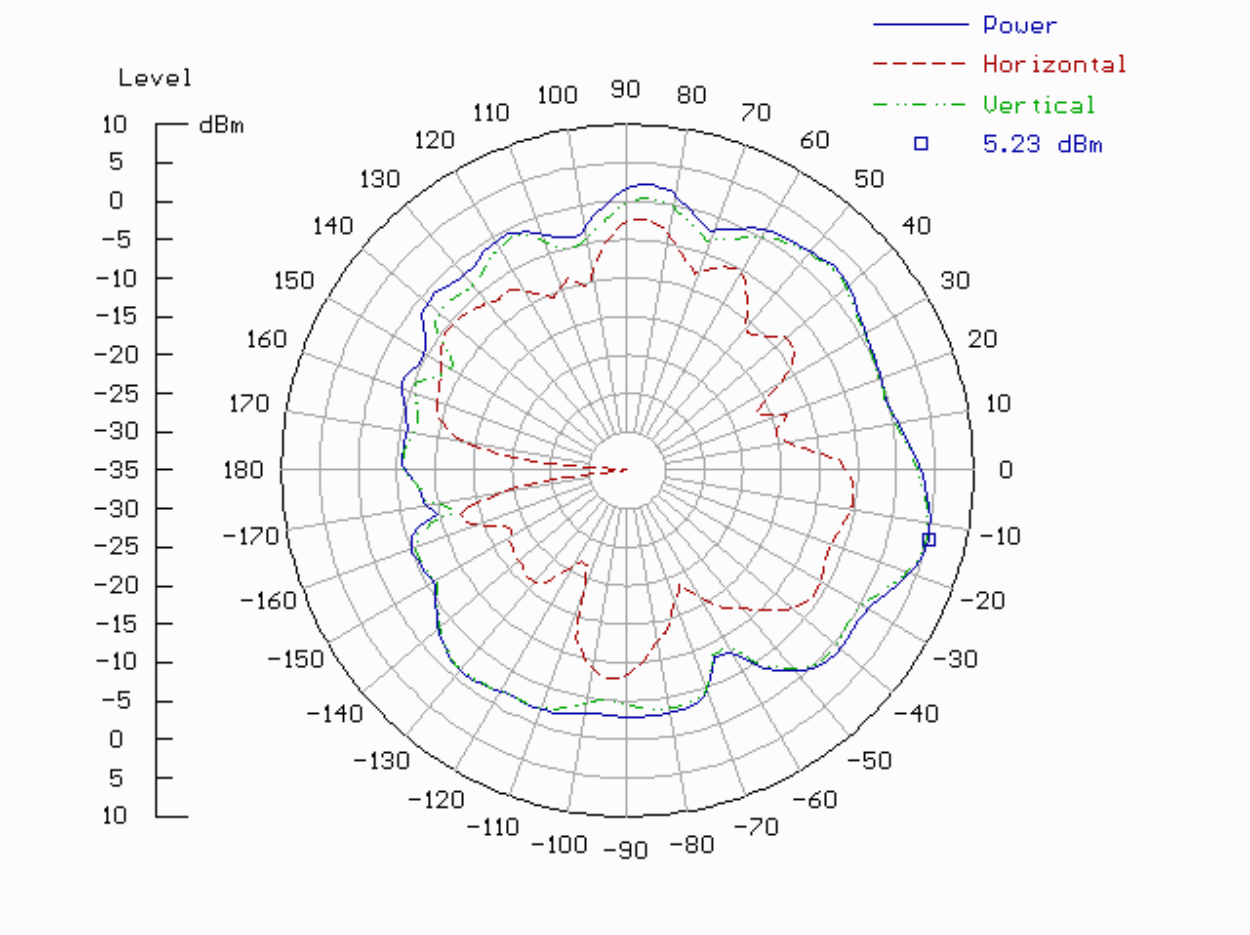

Fig. 11: Maximum EIRP value found for 434 MHz when using the EU module (power setting: 0x32), ANT2, channel 2 and measurement antenna height of 2.0 m.

4.2.3 Japan Approval Related Test Result

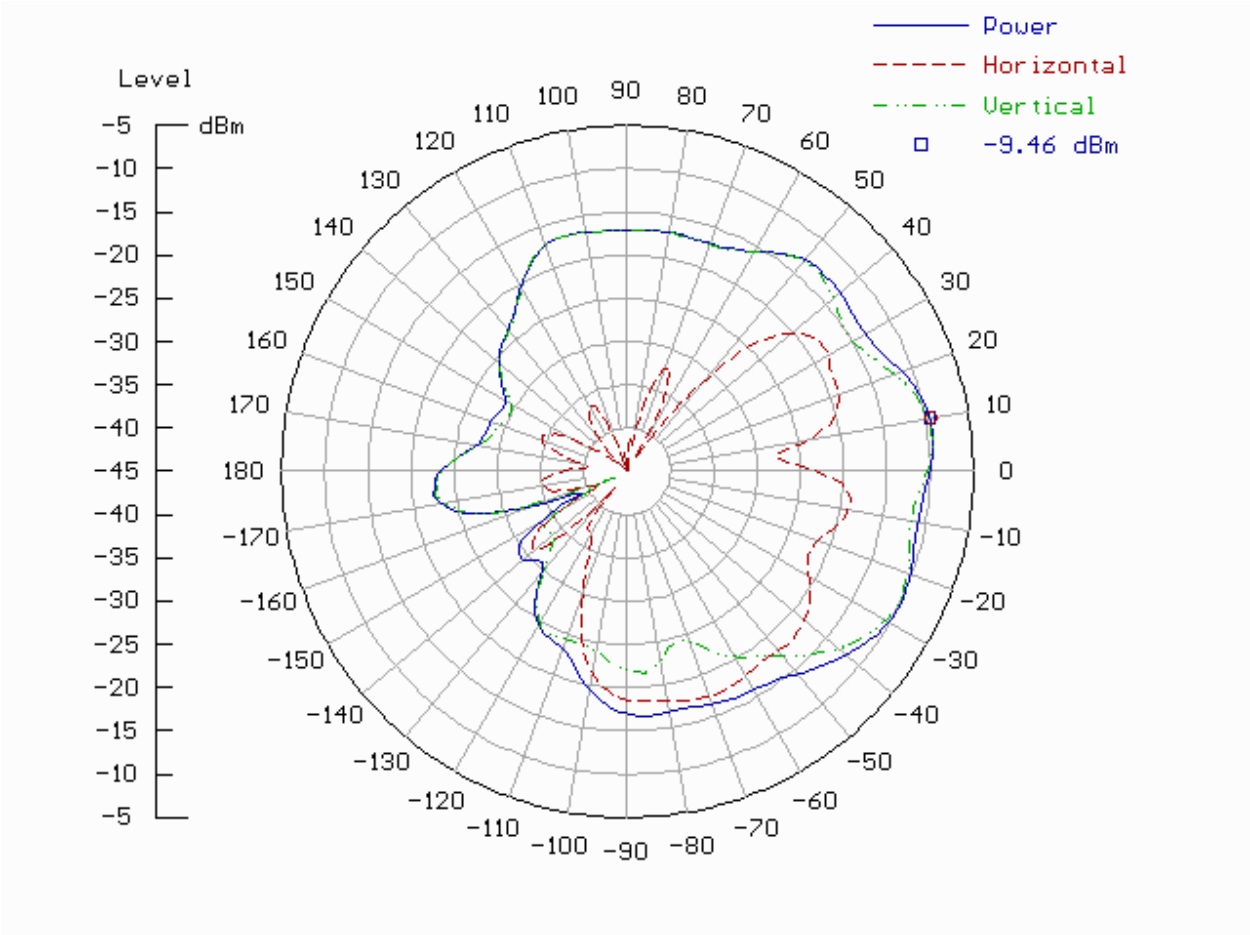

Fig. 12: Maximum EIRP value found for 315 MHz when using the Japan module (power setting: 0x32), ANT2, channel 2 and measurement antenna height of 3.0 m.

5 Equipment lists

ID	Description	Manufacturer / Type	Serial Number	Calibration Due Date
25358	Anechoic Chamber	Albatross Projects GmbH / SAC5	P27281-016	2026
25360	Antennenmast BAM 4.5-P	maturo GmbH / BAM 4.5	P/091/17791115	--
25361	Controller	maturo GmbH / NCD	202/17791115	--
25348	EMI Test Receiver	Rohde & Schwarz / ESR7	101600	08.08.2023
25352	Switch and control Platform	Rohde & Schwarz / OSP120	101542-rV	--
25357	Measurement Antenna	R&S HL562E (30 MHz – 6 GHz)	100824	09.10.2023

Tab. 6: Test equipment list.

6 Measurement Uncertainty

The measurement uncertainty has been calculated and reported in a separate document [1]. The absolute uncertainty for the antenna gain is in the range: < ± 4.2 dB.
The uncertainty applicable for relative measurements over frequency was determined heuristically (and refers mainly to the measurement antenna gain over frequency ripple) and is in range of ±0.2 dB.

7 References

[1] CETECOM: “Working Instruction WI_EMC-DUS_10_MESSUNSICHERHEIT V03, CTECOM GmbH EMC Testlab Branch Düsseldorf”, January 2019.
[2] CETECOM Testreport 19-1-0173601T02a_C2 (EU), 01/2021.
[3] CETECOM Testreport 19-1-0173601T06a_C1 (FCC and ISED), 01/2021.
[4] CETECOM Testreport 19-1-0173601T10a_C2 (Japan), 01/2021.

End of Test Report