ALCATEL
onetouch®
2G Home
PHONE

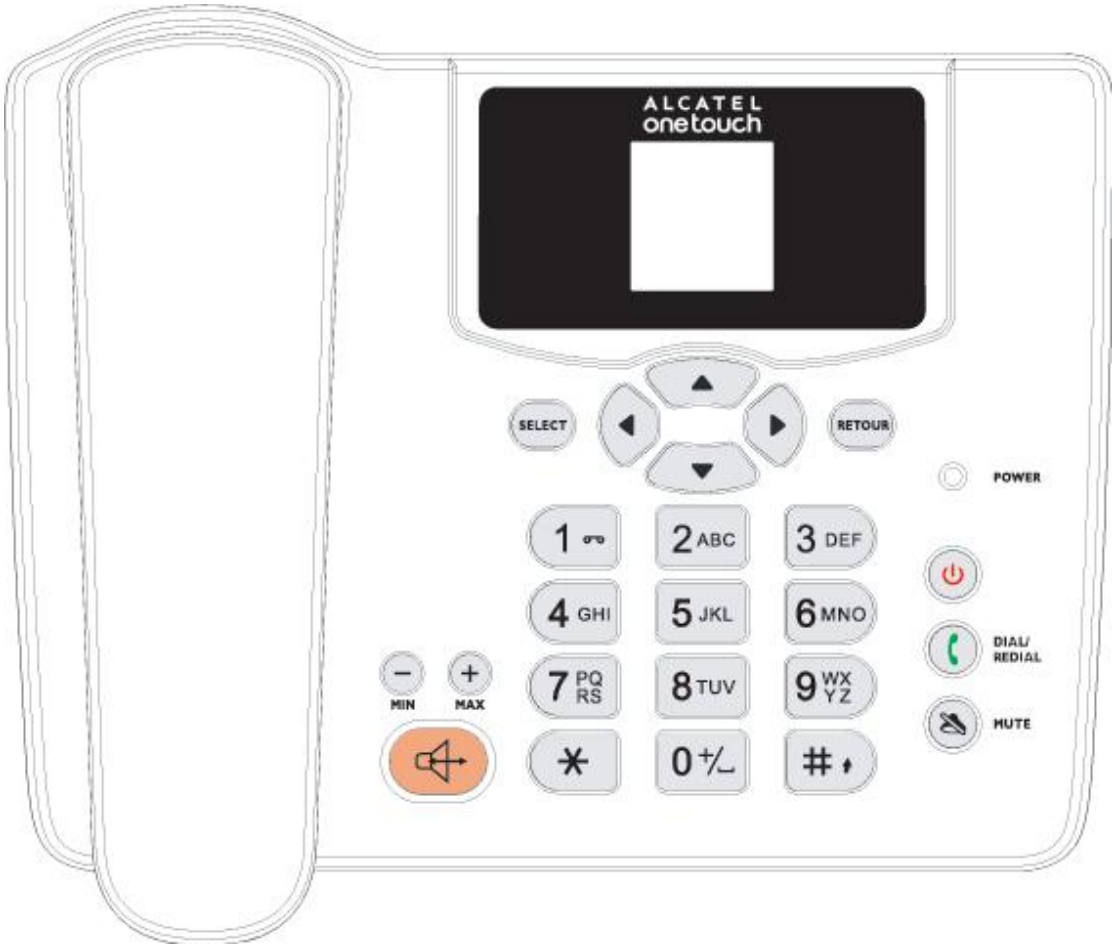

XXXXXXXXX

Contents

Contents 0
1. Your mobile 1
2. Getting started 4
3. Basic functions 5
4. Contacts 7
5. Recent Calls 9
6. Messages 10
7. Settings 13
8. Entertainment 14
9. Tools 15
10. FM Radio 16
FAQ 16
Safety and use 18

Friendly reminder:

This user manual applies to the one touch F112 phone. If there are minor differences in the description or illustrations between the manual and the actual product, the actual product shall take precedence.

Customers will not be notified separately of any upgraded model of this phone. Please contact our Customer service.

We reserve the right to revise anytime the contents of this manual without prior notice.

1. Your mobile

1.1 Basic specifications

Item	Specifications
Phone	Size: 200mm[L]×153.8mm[W]×48.7mm[Thickness]
	Weight: 574g (Battery included)
Screen resolution	128*64 pixels
Contacts	500 entries
Recent calls	60 entries
Messages	350 entries
Operating temperature	-20°C ~ 55°C
Battery Ni-MH	Capacity: 1200mAh
	Talk time: 6.5 hours (approx.)
	Standby time: 180 hours (approx.)
	Charging time: 10 hours (approx.)

🕮 Explanation:

Standby time refers to the time when the phone although in operating mode is not used for making calls or remains idle. Standby time and call time are both related to the conditions of use, the network situation and the environment.

1.2 Key pad indications

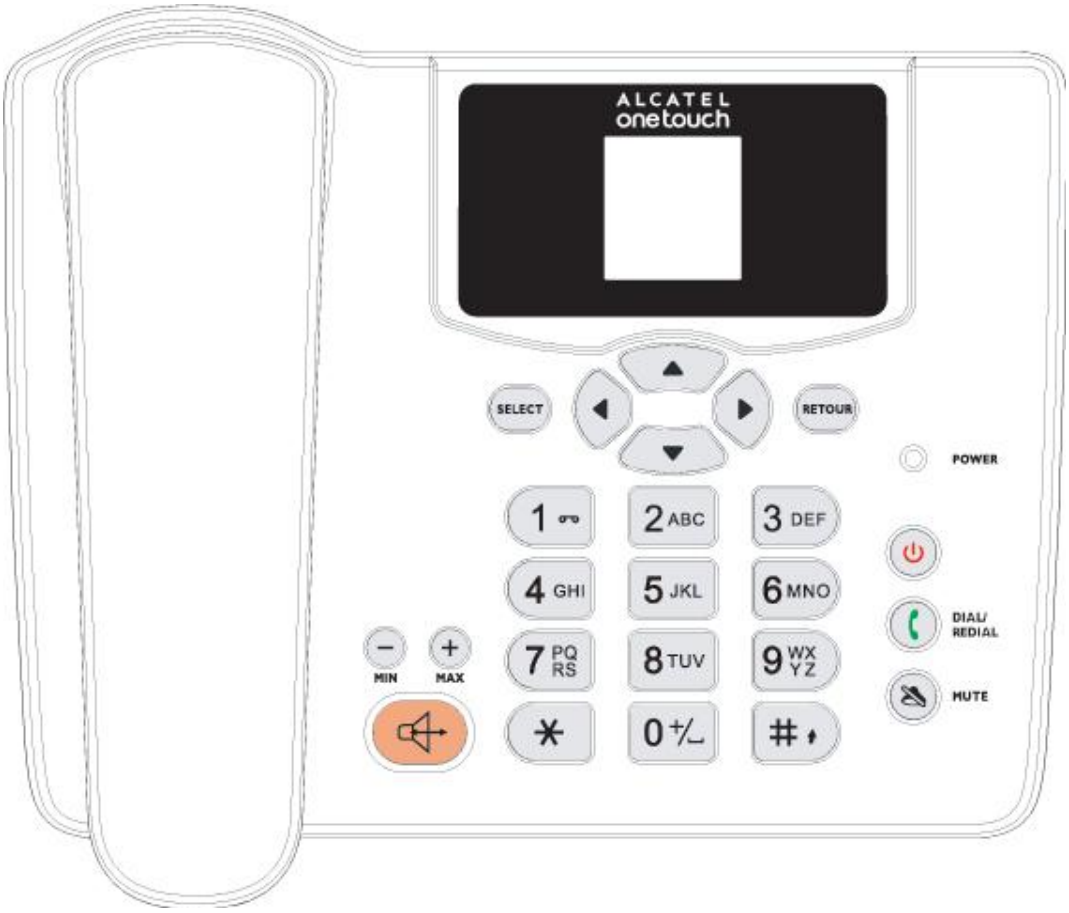

Number	Item	Function
1	SELECT Key SELECT	Enter menu Confirm an option
2	BACK Key BACK	Contacts List In Menu: Back/Delete
3	Navigation Keys	➢ Left: Alarm ➢ Right: Recent Calls ➢ Up: Messages ➢ Down: Create message
4	EXIT Key EXIT	Power on/Power off End a call Back to the idle screen
5	DIAL/REDIAL Key DIAL/ REDIAL	Recent Call Answer/Send a call
6	MUTE Key MUTE	Mute/Unmute during the call, the other can hear/ not hear you during the call

7	Volume Key LOW HIGH	Change the volume during the call
8	Speaker Key	You can select this key to activate or deactivate handsfree
9	1 Key	When standby, holding [1] Key 2 seconds to call the voice mail number.
10	* Key	When input numbers in standby, holding [*] Key 2 seconds to input **P** after main number and then extension number.
11	0 Key	When input numbers in standby, holding [0] Key 2 seconds to input + before the numbers. When you edit a message, press this key to enter space.
12	# Key	When input numbers in standby, holding [#] 2 seconds to input **T** after main numbers and then extension number. When you edit one message, press this key to change the input method.

1.3 Main Menu

From the main menu, use the navigation key to select the item you want. After selection, press the left soft key to confirm.

Contacts	Delete All	Phone
Contacts List	Messages	Call
Search	Create	Security
Add New	Inbox	Sound
Groups	Outbox	Entertainment
Speed Dial	Draft	Tools
Contacts Management	Templates	Stopwatch
Recent Calls	Delete Messages	Alarm
Missed Calls	Settings	Schedule
Received Calls	Memory Status	Calculator
Dialed Calls	Voice Mail	World Time
Call Time	Settings	FM Radio
Last Call	Display	

1.4 Screen Icons

	Battery power indicator. More bars indicate a higher power level
	The more bars, the stronger signal
	You have received one or more text messages
	Indicate the message box is full
	You have received one or more voicemail messages
	Indicate the phone is making a call
	You have missed one or more calls
	Alarm or schedule has been set
	Indicate the phone have set Voice privacy
R	Indicate the phone is roaming

2. Getting started

2.1 Removing and installing the back cover

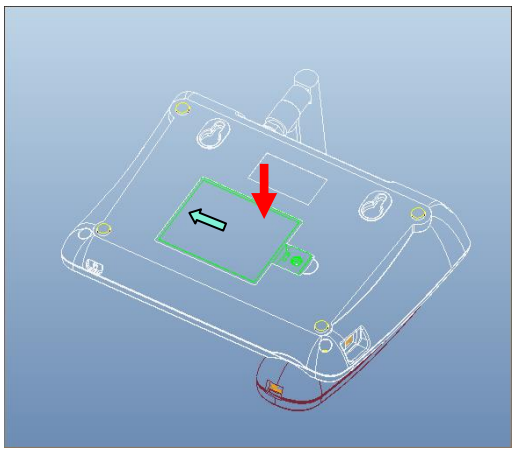

Close the back cover

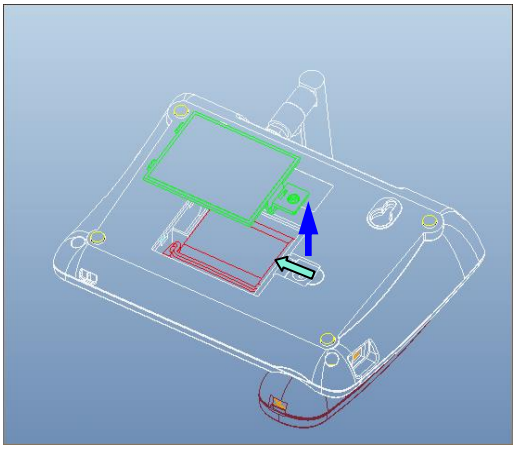

Open the back cover

2.2 Installing and removing the battery

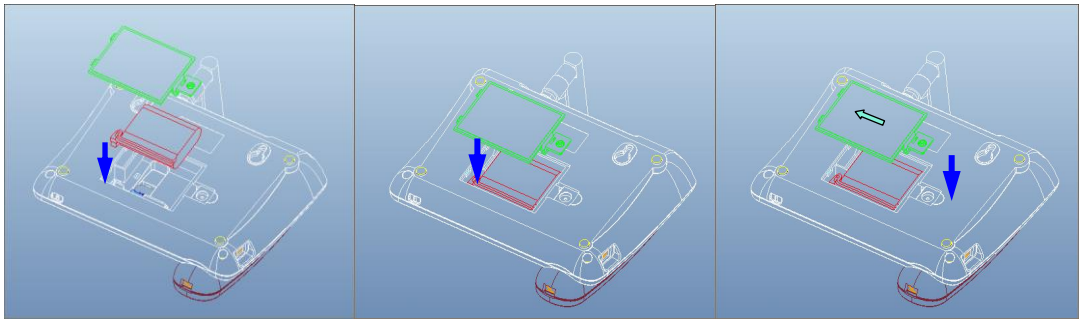

Installing the battery Fixing the battery Closing the back cover

2.3 How to use the Wall Hook

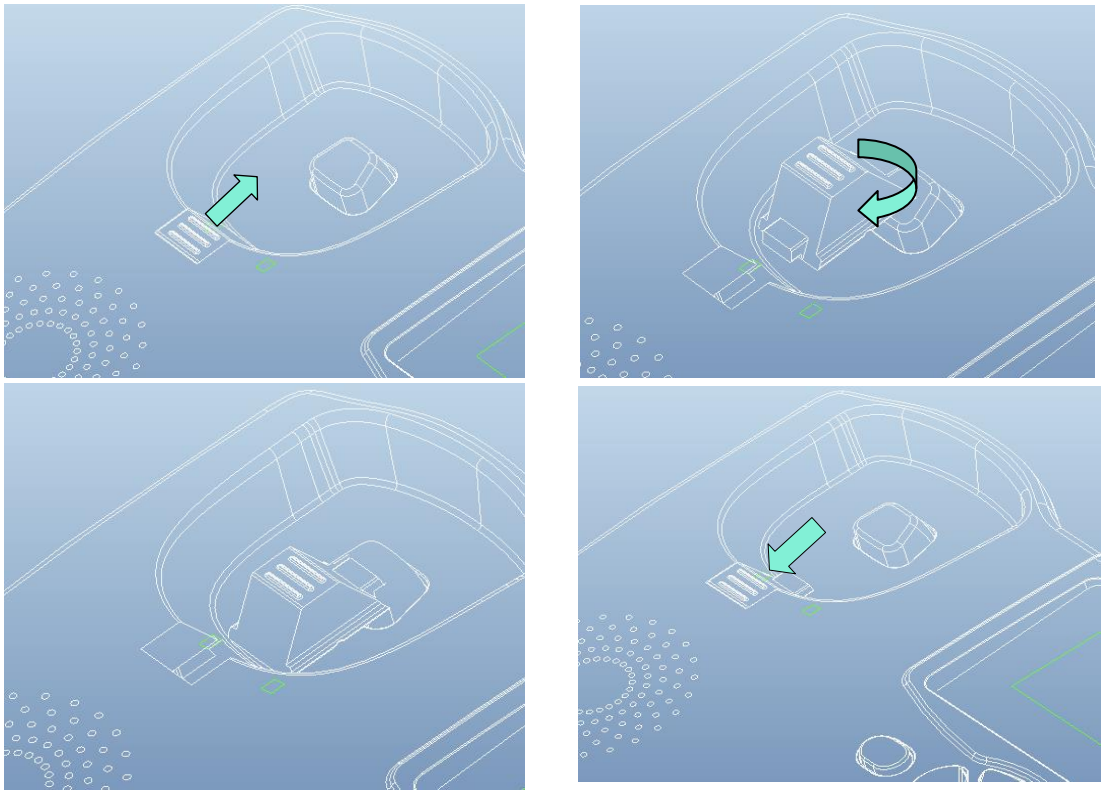

3. Basic functions

3.1 Power on/off

When power is sufficient, press and holds the EXIT key to power on. If you have activated a password, you will be prompted to enter it. Normally the phone is ready for use as soon as you enter the password, please refer to Menu/Settings/Security settings. When the phone is power on, press and holds the key EXIT to turn it off.

3.2 Making a call

3.2.1 Enter the number directly

In the standby mode, use the number key to enter a phone number, and then press the Dial/Redial key to make the call.

3.2.2 Dial a number in the Call Memory

In the standby mode, press the Dial/Redial key to access recent calls list, and press send key again to dial the selected number.

3.2.3 Speed dial

In the standby mode, make a long key press on keys 2 to 9 to speed dial a number. You also can press the number keys and then press the Dial/Redial key to make a speed dial. For details regarding speed dial setting. Please refer to “Contacts/Speed dial”. Key 1 is a default setting for voice mail number.

3.2.4 Emergency call

Enter emergency number, and then press the Dial/Redial key. In any situation, with or without phone lock activated, your phone can still make an emergency call.

3.3 Functions available during a call

During a call, access the Menu by pressing the Select key.

3.4 Input mode

You may enter letters, numbers and symbols in the Contact, SMS, Note and other menu functions.

3.4.1 Entering letters

There are eight text modes: Abc, En, 123.

Please use the # key to change input modes. Please use * key to change the capital and small letter.

3.4.2 Entering numbers

Press # Key to select the input method 123 to input one number.

3.4.3 Entering symbols

Press and hold * key to enter symbol list.

4. Contacts

The phone can store up to 500 contacts. From the idle screen press the Back key to display the list of contacts. The contact list can also be accessed through Menu/Contacts.

4.1 Contacts List

Select Menu/Contacts/Contacts List to access the contacts list. Press the Select key for the following options: View, Edit, Add New, Send Messages, Send Contacts, Copy/Move to UIM Card (for phone contacts), Copy/Move to Phone (for UIM card contacts) and Delete.

View: Check the contact's personal information.

Edit: Edit the contact data.

Add New: Add a new contact.

Send Messages: Send a text message to the contact.

Send Contacts: Create a new text message and add the contact details to the content.

Copy to UIM Card/Copy to Phone: Copy a phone contact to UIM card /Copy a UIM card contact to phone.

Move to UIM Card/Move to Phone: Move a phone contact to UIM card /Move a UIM card contact to phone.

Delete: Delete the contact details in Contacts.

4.2 Search

Select Menu/Contacts/Search, input contact's name, you can find out all contacts which contain the name you input.

4.3 Add New

Select Menu/Contacts/Add New, to add a new contact to phone or UIM Card. If the default save position is phone memory, you can enter Name, Mobile number, home number,

office number, fax number, email address, address, website address, memo, group and ring tone.

4.4 Groups

Select Menu/Contacts/Groups to access groups list, Contacts are separated by the following groups: All, No Group, UIM Card, VIP, Family, Colleague, Friends, Schoolmates and Business. You can select any group to view all the contacts in that group; you can also rename the group.

4.5 Speed Dial

Select Menu/Contacts/Speed Dial to set keys 2 to 9 for speed dialing. If the number key has not been set, press the Select key and select a phone number from Contacts. If the number key has been set, press the left soft key and the following options will be available: Add New, Delete.

Add New: You can add a number as speed dial number.

Delete: Delete the speed dial number.

4.6 Contacts Management

Select Menu/Contacts/Contacts Management to access contacts management option. You can see the following menu: Move Contacts, Copy Contacts, Delete Contacts, Save Location, View Mode and Memory Status.

Move Contacts: Move all the phone contacts to UIM card or move all the UIM card contacts to phone.

Copy Contacts: Copy all the phone contacts to UIM card or copy all the UIM card contacts to phone.

Delete Contacts: Delete batch contacts in phone or delete batch contacts in UIM card or delete all the contacts in phone and UIM card. You need to enter the phone password if you select to delete all contacts.

Save Location: Make default position when add a new contact. You can select: Phone, UIM Card or Select When Save.

View Mode: Select one mode to view contacts list. If you select Phone, you can view only phone contacts when you open contacts list, and you can view only UIM card contacts if you select UIM Card. When you select Phone and UIM Card, you can view all the contacts every time you open contacts list.

Memory Status: View the number of entries stored and check the memory used up for the contact in the phone memory and UIM card.

5. Recent Calls

From the idle screen, press the Dial/Redial key to display the list of dialed numbers. Press the left and right keys to toggle between: Dialed Calls, Missed Calls and Received Calls. In the “Recent calls” menu you can also access the following options: Missed Calls, Received Calls, Dialed Calls, Call Time, Last Call and Delete All.

5.1 Missed calls, Received calls, Dialed calls

Select Missed calls/ Received calls/ Dialed calls from the Recent Calls menu to access the submenus of the various call logs. Use the left soft key to access the options such as View, Edit, Save, Save to Contacts, Send Messages, Send Contacts and Delete.

View: View the details of the record.

Edit: Edit the number before you save it or make the call.

Save: Save the number to the contacts.

Save To Contacts: Save the number to the existed contacts.

Send Messages: Send a text message to the record.

Send Contacts: Create a new text message and add the contact details to the content.

Delete: Delete the record.

5.2 Call time

Select Menu/Recent calls/Call time to display the time record of all received calls, dialed calls and all calls. The call time of all calls can be set to zero any time by resetting the timer.

5.3 Last Call

You can see the details of your last call.

5.4 Delete All

Select Recent Calls/Delete All you can clear all Missed Calls, Received Calls, Dialed calls and All Calls.

6. Messages

Press down key directly to access the message editing screen. Press upper key or press the Select key to select Messages to access the Messages menu.

6.1 Create new message

Select Menu/Messages/Create to access the message editing screen. Please refer to “Input mode” section for instructions on message editing.

In the message editing screen, press the Select key for the following options: Send, Insert contacts, Templates, Insert emotion Symbol and Settings.

Send: access recipients, you can input up to 100 recipients.

Insert Contacts: Add different contact details from Contacts to a message.

Insert Templates: Add commonly-used terms to a message.

Insert Emotion Symbol: Add an expression to a message.

Settings: Set the send mode, the priority and the delivery report for the message edited.

6.2 Inbox

Select Menu/Messages/Inbox to access the list of messages in this box. Press the left soft key for the following options: View, Reply, Forward, and Delete, Copy to UIM Card/Copy to Phone, Move to UIM Card/Move to Phone.

View: Review the contents of the current messages. From the contents, press the left soft key for the following options: Reply, Forward, Delete and Extract details.

Reply: Send a message to the sender of the current message.

Forward: Modify the contents of a message and send it.

Delete: Delete a message.

Copy to UIM Card/Copy to Phone: Copy a phone message to UIM card or copy a UIM card message to phone.

Move to UIM Card/Move to Phone: Move a phone message to UIM card or move a UIM card message to phone.

6.3 Outbox

Select Menu/ Messages/Outbox to access the list of messages in this box. Press the Select key for the following options: View, Resend, Forward and Delete. About the operations, please refer to the related options in the “Inbox”.

6.4 Drafts

Select Menu/ Messages/Drafts to access the list of messages in the drafts box. Press the Select key for the following options: View, Forward and Delete. About the operations, please refer to the related options in the “Inbox”.

6.5 Templates

Select Menu/ Messages/Templates to access the list of messages template. Press the up/down key to select the message you want.

Press the left soft key for the following options: Send, Add, Edit and Delete (Edit and Delete options will be visible for new templates).

It has 10 message templates in factory reset mode, and you may edit it optionally or add more templates accordingly.

6.6 Delete message

Select Menu/ Messages/Delete Messages to access delete function. You may delete the messages in Inbox, Outbox, Draft and also clear all the messages.

6.7 Settings

Select Menu/ Messages/Settings to access submenu with below options: Send Option, Priority, Delivery Reports, Callback Number, Save Location, Message Validity and Auto Delete.

Send Option: Choose a default send mode when create and send a new message, such as send and save, send only or save only.

Priority: Choose the priority sequence such as normal, urgent and emergency.

Delivery Report: You may activate/deactivate this function. The phone will receive the information message notification that inform message sent or unsent.

Callback Number: You may activate/deactivate this function. When you activate it, you need to enter the number which you want the receiver to call you back.

Save Location: You can choose the new messages' save position. The options are Phone and UIM Card.

Message Validity: Choose the validity of message.

Auto delete: You can turn on the function. When the inbox is full, the newest message will replace the oldest message.

6.8 Memory Status

Select Menu/Messages/Memory Status to check SMS storage status in Phone (Inbox, Outbox and Draft) and UIM Card.

6.9 Voice mail

Select Menu/Messages/Voice Mail to enter the voice mail submenu, the following options are available: Voice Mail, Listen Voice Mail and Voice Mail Number.

Voice Mail: Check how many voice messages are in the phone, press 1 to access to the voicemail, press 2 to clear voice mail.

Listen Voice Mail: Dial the voice mail number.

Voice Mail Number: Set the voice mail number.

7. Settings

7.1 Display

You can do some settings following your need. You can customize your phone by setting Brightness and Backlight Time.

Brightness: You can choose the brightness as Light Dark or Normal.

Backlight Time: Set the backlight time - 10 sec, 30 sec, 50 sec, always on

7.2 Phone

Language: English.

Time Format: Set 12-hour mode and 24-hour mode.

Date Format: Set date format and you may have three options: dd/mm/yy, mm/dd/yy, yy/mm/dd.

7.3 Call

Minute Beep: You will hear the alert sound at every minute during the call if you activate this function.

Voice Privacy: activated this feature, voice service will be protected by encoding.

Auto Redial: The cell phone will redial automatically when the call has failed.

DTMF Tone Settings: You can set the DTMF Tone as Normal or Long.

Supply Services: You may access to call forward and call waiting by choosing this item.

Call Forward (requires network support): You can activate the status of call forward to forward calls to another phone in the following conditions: When Busy, No Answer, Unreachable, All Calls. You can edit the forwarded numbers for them separately.

Call Waiting (requires network support): When it is activated, you can pick up or end the second calling when you are on the phone. And you can edit the feature code yourself.

International code: You can set the international code as automatic or manual input.

Dialing Delay Time: You can set the dialing delay time as 3 Sec, 4 Sec,…7 sec or off.

7.4 Security

Select menu/settings/security, then enter the security submenu by inputting the phone code (default phone code: 0000). You can set entry code for your Messages, Contacts, and Recent Calls here.

Phone Lock: Including phone code activation and inactivation, and password resetting. If you activate the phone code, you have to enter the phone code every time when the cell phone powers on.

PIN Settings: includes PIN code checking and PIN code resetting. When PIN code is activated, the PIN code needs to be entered when cell phone turns on. If you enter incorrect PIN code for 3 times, you should enter PUK code to reset PIN code. PIN code and PUK code are supplied by with the UIM card.

Contacts Lock: setting protective code to Contacts, the code is the same as phone code.

Recent Calls Lock: setting protective code for Recent Calls, the code is the same as phone code.

Messages Lock: setting protective code for SMS service, the code is the same as phone code.

Restore Factory Setting: chosen this item, the phone will be resumed to original settings when it came out from the factory. Please be aware that after selecting the restore factory setting, all the settings of user will be deleted.

7.5 Sound

Select Menu/Settings/Sound, you can enter the sound settings menu.

Press the Select key to enter the submenu; you can see the following operations:

Set the volume or the ring tone of incoming call, SMS, Alarm, and the alert mode of incoming call, SMS, alarm, missed call and power on/off.

8. Entertainment

The phone is embedded with one game: Tetris. Please refer to the game instructions for details and operations.

9. Tools

9.1 Stopwatch

Press Left soft key to start time keeping, or press pause function key to pause time keeping, or press continue function key to resume time keeping. You can press record function key to get the time recorded.

9.2 Alarm

Your phone has a built-in alarm clock. You can edit up to 6 alarm clocks.

Edit: you may edit the Alarm clock status, time, and mode. The status is either on or off. If you have selected 24-hour Time Format under Settings-Phone, then you can input 00:00 to 23:59; if you have selected 12-hour Time Format, you can choose AM or PM for time by pressing OK key, if the number you input is out of the range, the phone will not show. The available modes are: Every day, Monday to Friday, Monday to Saturday, any day of workday and weekend, and Once.

On/Off: Start/Stop using the alarm clock

Delete: Delete the alarm settings

Delete All: Clear all alarm settings

9.3 Schedule

There is a monthly-view calendar for you to keep track of important meetings, appointments, etc. Days with events entered will be marked with an alarm icon.

9.4 Calculator

Your phone can carry out simple operations, i.e. the [Four Arithmetic Operations]. Numbers are entered using number keys, press the * key to input decimal points “.”, the Select key can be used to insert the plus and minus symbols, the Back key is used to clear the entries, the left key to insert “-“ and the right key to insert “÷”, the upper key is used to insert “+” and the lower key to insert “×”. Press the # key to display the result of the calculation.

9.5 World Time

This function allows you to find out the time in different cities around the world.

10. FM Radio

You can use the phone as the FM Radio.

For FM Radio screen:

Left and Right keys: Accommodate the channel frequency by frequency, each time by 0.1MHz.

Up and down navigation keys: Auto search to previous or next channel.

* / # key or Low/High Key: To decrease or increase the volume of FM radio

Global Search: select Option/Global Search, all the channels will be automatically searched out, and generate a channel list for user reference.

Channel List: select Option/Channel List, access to Channel List submenu, press left soft key, you can play the channel, edit the exist channel, or delete the channel or delete all channels.

Save: select Option/Save, you can save current channel into channel list.

Minimize: Select Option/Minimize to make FM screen invisible, meanwhile you can use other functions (SMS, Games, Add names etc.).

📖 The quality of FM radio depends on the coverage of the radio station in that particular area.

FAQ

If an anomaly occurs when you are using your phone, please refer to the following table. If the problem remains unsolved, please contact the phone vendor.

FAQ	Item to be checked

FAQ	Item to be checked
The telephone does not charge properly	Make sure that the charger is correctly connected to the phone and the power socket. Make sure you are using a charger specifically designed for this phone.
The phone does not switch on	Check the battery charge level. Make sure the battery is properly installed. Press and hold the ON key until the screen comes on.
Unable to dial a number	Make sure you have dialed a valid phone number. Check if your phone is connected to the network.
Poor sound quality	Check if the reception signal is strong enough. If you are inside a building, rotate the phone or move close to a window.
The other party cannot hear you during a call	Make sure the mouthpiece is not blocked.
The receiver volume is low	Check if the receiver volume is set to maximum.
The phone signal is poor or switches off frequently	Make sure the phone antenna is not damaged. Check the phone signal strength. If there is no signal, use your phone in a location where the signal is strong.
The phone displays “out of network” or “network failure”.	Check if you are in an area where the signal is weak (in a tunnel or surrounded by building). Move to another location and try again. Make sure you are not trying to use a service that you haven’t subscribed to. If you require this service, contact the network for details.

FAQ	Item to be checked
When you cannot connect to the network normally	(1) The network provider does not provide this service or you have not subscribed to this service. Please contact your provider for details on the subscription and use of these services. (2) Incorrect setting. Please set the correct parameters

Safety and use

Please read carefully and observe the following regulations to avoid damaging your telephone or using it against the law.

Electronic devices/Health care facilities.

Turn off your phone when you are near high-precision electronic devices in use to avoid causing malfunction or interfering with their operation (fire alarms, automatic doors and automatic control equipment).

Turn off your phone in hospitals or places where the use of phones is restricted. Phones affect the normal operation of electronic devices and medical instruments, such as pacemakers, hearing aids and other electronic medical devices.

Phones should be forbidden inside an operating theatre, Intensive Care Unit (ICU) or Cardiac Care Unit (CCU).

Pay attention to the settings of the sound volume to avoid disturbing the patients.

Flammable or explosive areas

Turn off your phone near flammable or explosive areas. Do not install/remove or charge the battery or use the phone in these areas to prevent any explosion or fire. Flammable and explosive areas include: chemical plants, facilities with chemical substances or particles in the air (grains, dust and metal powder), petrol stations and fuel depots, fuel storage areas (for example, under a ship’s deck), areas with explosion warning signs,

areas with “turn off two-way radio equipment” signs and places where you are usually recommended to switch off car engines.

Safety of use in a vehicle

Please observe the relevant local or national regulations related to the use of phones in a vehicle. Please refrain from using the phone while driving. If you are driving and need to use the phone in an emergency, use a hands-free device (optional purchase) to be safe. Otherwise, park the car before using the phone.

Do not place your phone on the dashboard or within an airbag deployment area to avoid causing injury to passengers in the car when the bag inflates or bursts.

Using the phone on an airplane is strictly forbidden. It is recommended to remove the battery to avoid the phone being turned on accidentally.

Storing environment

To avoid demagnetizing problem, keep the phone away from magnetic materials, such as magnetic discs and credit cards.

Ensure that the phone does not come into contact with liquids. If it does, turn it off immediately, remove the battery and quickly contact the vendor.

Do not store the phone, battery or charger in an environment with a strong magnetic field, such as an electromagnetic pot or a microwave oven, to avoid causing the phone to malfunction, catch fire or explode.

Do not subject the phone, battery or charger to heavy impact or vibration to avoid battery leakage, phone malfunction, overheating, fire or explosion

Do not place sharp metallic items such as needles, near the receiver because the receiver will attract them and you may be injured when using the phone.

Do not place the phone in the back pocket of your trousers or skirt to avoid damaging it when you sit down

Child health

Keep the phone, battery and charger out of the reach of children. Do not let children use the phone, battery or charger without supervision.

Do not let a child put a battery in his/her mouth to avoid electrolyte poisoning.

Keep children away from small phone accessories to prevent suffocation or blocking of the oesophagus as a result of swallowing.

Operating environment

Do not use your phone while it is being charged during thunderstorms, or use it outdoors to avoid being struck by lightning or other injury.

Do not use your phone in dusty, wet, dirty places or places near magnetic fields to prevent malfunction of its internal circuits. Keep the phone as dry as possible. Keep the phone, battery and charger away from water and water vapour and do not clean the phone with a wet cloth to avoid short circuits, malfunction due to corrosion and electric shocks.

Do not turn on or off the phone against your ear to avoid your ears and body from being impaired.

If you feel unwell (epileptic seizures or blackouts) after playing the games with your phone for a long period of time, please seek medical assistance immediately.

Move your phone away from your ear while using the hands-free mode, because the amplified volume might cause hearing damage.

Make sure you switched off your phone in areas where phone use is prohibited!

Cleaning and maintenance

Switch off the phone before cleaning and maintenance. The charger should be unplugged from the power socket and the phone and charger disconnected to prevent any electric shock or short circuiting of the battery or charger.

Do not wipe the phone or charger using chemical substance (alcohol benzene), chemical agents or abrasive cleaning agents to avoid damaging its parts or causing a malfunction.

You may clean with a slightly damp anti-static soft cloth.

Do not scrape or alter the phone case as paint substances may cause an allergic reaction. If such a reaction occurs, cease using the phone immediately and seek medical help.

Wipe dust off the power plug and keep it dry to avoid risk of fire

If the phone or accessories do not work properly, contact your local vendor

Do not dismantle the phone or its accessories yourself.

Protecting the environment

Please observe the local regulations on phone packaging, battery and used phone disposal and bring them to the collection point for proper recycling. Do not dispose of used phones or batteries in a household rubbish bin.

Please take your used, unwanted batteries to a designated place. Do not dispose of them in a rubbish bin.

Emergency call

In an emergency situation, if the phone is on and you are within the network range, it can be used to make an emergency call. However, emergency call numbers may not be reachable on all networks; you should never rely on your phone for emergency calls.

Using the battery/charger

Only use batteries and chargers approved by the manufacturer. Do not use batteries or chargers that are not compatible with your model to avoid any explosion.

Do not throw a battery in a fire as it might catch fire or explode. Do not cause a short circuit to the charger as it might result in malfunction, smoke or fire.

Do not place conductors like metals, keys or jewels, against the battery poles or allow them to touch the ends of the battery to avoid short circuiting the battery and causing injury (burns, for example) as a result of battery overheating

If the power cable is damaged (wires exposed or broken) or the connection to the plug is loose, do not use it to avoid electric shock, short-circuit of the charger or a fire.

Do not dismantle the battery or weld the two poles of the battery to prevent the battery from leaking, overheating, catching fire or exploding.

Keep the charger away from any container of water or other liquids. Infiltration of liquid may cause electric leakage or other malfunction to the charger.

If the battery leaks, emits smoke or a strange odour, cease use immediately and move it far away from naked flames or people to avoid a fire or injury from explosion.

Do not charge the battery in a dusty or damp environment and keep the cable away from heated objects.

The battery is not fully charged when leaving the factory. Therefore, you should charge the battery for two hours before use. Before charging, make sure the charge plug is correctly inserted in the power socket. If it is incorrectly inserted, electric shock might occur and the phone or battery may catch fire or explode. When charging is completed, pull out the charger plug from the power socket, and do not pull the cable.

If the liquid in the battery splashes into your eyes, do not rub the eyes to avoid damaging your vision, rinse the eyes immediately in clean water and go to a hospital for assistance.

Do not place heavy objects on the charger cable. Do not damage, twist or pull the cable to avoid causing electric shock or fire.

When the battery cannot be installed correctly in the phone, do not press down on it heavily to prevent it from leaking or exploding. Do not remove the battery when the phone is on.

If the battery is distorted, has changed colour or is unusually hot when charging or when it is stored, remove immediately the battery and stop using it or it may leak, become overheated, explode or catch fire.

If a battery is not used for a long period of time after charging, store it at room temperature

Do not touch the power socket, power cable or charger with wet hands to avoid electric shock.

If water or other liquid enters the charger, immediately disconnect the charger plug from the power socket to prevent it from overheating, catching a fire or malfunction.

Warning: The manufacturer disclaims any liability for damage, which may result as a consequence of improper use of this phone or use contrary to the instructions contained in this manual.

RF Exposure Information and Statement

The SAR limit of USA (FCC) is 1.6 W/kg averaged over one gram of tissue. For this device, the highest reported SAR value for usage near the body is:

Maximum SAR for this model and conditions under which it was recorded:		
Body worn	GSM 850	0.58 W/Kg
Body worn	GSM1900	0.63 W/Kg

This device was tested for typical body-worn operations with the back of the handset kept 2.5cm from the body. To maintain compliance with FCC RF exposure requirements, use accessories that maintain a 2.5cm separation distance between the user's body and the back of the handset. The use of belt clips, holsters and similar accessories should not contain metallic components in its assembly. The use of accessories that do not satisfy these requirements may not comply with FCC RF exposure requirements, and should be avoided.

This device complies with part 15 of the FCC rules. Operation is subject to the following two conditions: (1) this device may not cause harmful interference, and (2) this device must accept any interference received, including interference that may cause undesired operation.

NOTE: The manufacturer is not responsible for any radio or TV interference caused by unauthorized modifications to this equipment. Such modifications could void the user’s authority to operate the equipment.

NOTE: This equipment has been tested and found to comply with the limits for a Class B digital device, pursuant to part 15 of the FCC Rules. These limits are designed to provide reasonable protection against harmful interference in a residential installation. This equipment generates uses and can radiate radio frequency energy and, if not installed and used in accordance with the instructions, may cause harmful interference to radio communications. However, there is no guarantee that interference will not occur in a particular installation. If this equipment does cause harmful interference to radio or

television reception, which can be determined by turning the equipment off and on, the user is encouraged to try to correct the interference by one or more of the following measures:

- Reorient or relocate the receiving antenna.
- Increase the separation between the equipment and receiver.
-Connect the equipment into an outlet on a circuit different from that to which the receiver is connected.
-Consult the dealer or an experienced radio/TV technician for help

Changes or modifications made to this equipment not expressly approved by TCL Communication Ltd. may void the FCC authorization to operate this equipment.

This equipment complies with FCC RF radiation exposure limits set forth for an uncontrolled environment.

Radiofrequency radiation exposure Information:

This equipment complies with FCC radiation exposure limits set forth for an uncontrolled environment. This equipment should be installed and operated with minimum distance of 2.5 cm between the radiator and your body. This transmitter must not be co-located or operating in conjunction with any other antenna or transmitter.

ALCATEL is a trademark of Alcatel-Lucent and is used under license by TCL Communication Ltd.

© Copyright 2015 TCL Communication Ltd. All rights reserved

TCL Communication Ltd. reserves the right to alter material or technical specification without prior notice.