FCC SAR Test Report

APPLICANT	:	TCL Communication Ltd.
EQUIPMENT	:	LTE Tablet
BRAND NAME	:	ALCATEL ONETOUCH
MODEL NAME	:	9021A
MARKETING NAME	:	ONETOUCH POP™ 8 LTE
FCC ID	:	2ACCJB023
STANDARD	:	FCC 47 CFR Part 2 (2.1093) ANSI/IEEE C95.1-1992 IEEE 1528-2003

We, SPORTON INTERNATIONAL (SHENZHEN) INC., would like to declare that the tested sample has been evaluated in accordance with the procedures and had been in compliance with the applicable technical standards.

The test results in this report apply exclusively to the tested model / sample. Without written approval of SPORTON INTERNATIONAL (SHENZHEN) INC., the test report shall not be reproduced except in full.

Reviewed by: Eric Huang / Deputy Manager

Approved by: Jones Tsai / Manager

Testing Laboratory
2353

SPORTON INTERNATIONAL (SHENZHEN) INC.
1F & 2F,Building A, Morning Business Center, No. 4003 ShiGu Rd., Xili Town, Nanshan District, Shenzhen, Guangdong, P. R. China

Table of Contents

1. Statement of Compliance **4**
2. Administration Data **5**
3. Guidance Standard **5**
4. Equipment Under Test (EUT) **6**
4.1 General Information 6
4.2 Maximum Tune-up Limit 7
4.3 General LTE SAR Test and Reporting Considerations 11
5. Proximity Sensor Triggering Test **13**
6. RF Exposure Limits **17**
6.1 Uncontrolled Environment 17
6.2 Controlled Environment 17
7. Specific Absorption Rate (SAR) **18**
7.1 Introduction 18
7.2 SAR Definition 18
8. System Description and Setup **19**
9. Measurement Procedures **20**
9.1 Spatial Peak SAR Evaluation 20
9.2 Power Reference Measurement 21
9.3 Area Scan 21
9.4 Zoom Scan 22
9.5 Volume Scan Procedures 22
9.6 Power Drift Monitoring 22
10. Test Equipment List **23**
11. System Verification **24**
11.1 Tissue Verification 24
11.2 System Performance Check Results 25
12. RF Exposure Positions **26**
12.1 SAR Testing for Tablet 26
13. Conducted RF Output Power (Unit: dBm) **27**
14. Bluetooth Exclusions Applied **68**
15. Antenna Location **69**
16. SAR Test Results **72**
16.1 Body SAR 74
16.2 Repeated SAR Measurement 78
17. Simultaneous Transmission Analysis **79**
17.1 Tablet Body Exposure Conditions 80
17.2 SPLSR Evaluation and Analysis 83
18. Uncertainty Assessment **90**
19. References **93**
Appendix A. Plots of System Performance Check
Appendix B. Plots of High SAR Measurement
Appendix C. DASY Calibration Certificate
Appendix D. Test Setup Photos

Revision History

REPORT NO.	VERSION	DESCRIPTION	ISSUED DATE
FA4D0805-02	Rev. 01	This is a variant product of 9020A. The test result is not affected, all test cases were performed on original report which can be referred to sporton report number FA4D0805 (Model name: 9020A; FCC ID: 2ACCJB003).	Jul. 06, 2015

1. Statement of Compliance

The maximum results of Specific Absorption Rate (SAR) found during testing for **TCL Communication Ltd., LTE Tablet, 9021A** are as follows.

Equipment Class	Frequency Band	Operating Mode	Highest SAR Summary	
			Body 1g SAR (W/kg)	Simultaneous Transmission SAR (W/kg)
PCB	WCDMA Band V	Data	0.94	1.59
	WCDMA Band II	Data	1.16	
	LTE Band 17	Data	0.47	
	LTE Band 5	Data	0.46	
	LTE Band 4	Data	1.42	
	LTE Band 2	Data	1.21	
	LTE Band 7	Data	**1.44**	
DTS	WLAN 2.4GHz Band	Data	1.31	1.58
NII	WLAN 5.2GHz Band	Data	0.72	1.59
	WLAN 5.3GHz Band	Data	0.13	
	WLAN 5.5GHz Band	Data	0.68	
Date of Testing:			Jan. 09, 2015 ~ Jan. 20, 2015	

This device is in compliance with Specific Absorption Rate (SAR) for general population/uncontrolled exposure limits (1.6 W/kg) specified in FCC 47 CFR part 2 (2.1093) and ANSI/IEEE C95.1-1992, and had been tested in accordance with the measurement methods and procedures specified in IEEE 1528-2003.

2. Administration Data

Testing Laboratory	
Test Site	SPORTON INTERNATIONAL (SHENZHEN) INC.
Test Site Location	1F & 2F,Building A, Morning Business Center, No. 4003 ShiGu Rd., Xili Town, Nanshan District, Shenzhen, Guangdong, P. R. China TEL: +86-755-8637-9589 FAX: +86-755-8637-9595

Applicant	
Company Name	TCL Communication Ltd.
Address	5F, C building, No. 232, Liang Jing Road ZhangJiang High-Tech Park, Pudong Area Shanghai, P. R. China. 201203

Manufacturer	
Company Name	TCL Communication Ltd.
Address	5F, C building, No. 232, Liang Jing Road ZhangJiang High-Tech Park, Pudong Area Shanghai, P. R. China. 201203

3. Guidance Standard

The Specific Absorption Rate (SAR) testing specification, method, and procedure for this device is in accordance with the following standards:

- FCC 47 CFR Part 2 (2.1093)
- ANSI/IEEE C95.1-1992
- IEEE 1528-2003
- FCC KDB 865664 D01 SAR Measurement 100 MHz to 6 GHz v01r03
- FCC KDB 865664 D02 SAR Reporting v01r01
- FCC KDB 447498 D01 General RF Exposure Guidance v05r02
- FCC KDB 248227 D01 802.11 Wi-Fi SAR v02r01
- FCC KDB 616217 D04 SAR for laptop and tablets v01r01
- FCC KDB 941225 D01 3G SAR Procedures v03
- FCC KDB 941225 D05 SAR for LTE Devices v02r03
- FCC KDB 941225 D05A Rel.10 LTE SAR Test Guidance v01r01

4. Equipment Under Test (EUT)

4.1 General Information

Product Feature & Specification	
Equipment Name	LTE Tablet
Brand Name	ALCATEL ONETOUCH
Model Name	9021A
Marketing Name	ONETOUCH POP™ 8 LTE
FCC ID	2ACCJB023
Wireless Technology and Frequency Range	WCDMA Band V: 826.4 MHz ~ 846.6 MHz WCDMA Band II: 1852.4 MHz ~ 1907.6 MHz LTE Band 17: 706.5 MHz ~ 713.5 MHz LTE Band 5: 824.7 MHz ~ 848.3 MHz LTE Band 4: 1710.7 MHz ~ 1754.3 MHz LTE Band 2: 1850.7 MHz ~ 1909.3 MHz LTE Band 7: 2502.5 MHz ~ 2567.5 MHz WLAN 2.4GHz Band: 2412 MHz ~ 2462 MHz WLAN 5.2GHz Band: 5180 MHz ~ 5240 MHz WLAN 5.3GHz Band: 5260 MHz ~ 5320 MHz WLAN 5.5GHz Band: 5500 MHz ~ 5700 MHz Bluetooth: 2402 MHz ~ 2480 MHz
Mode	• RMC 12.2Kbps • HSDPA • HSUPA • HSPA+ (Downlink Only) • LTE • LTE Carrier Aggregation (Downlink only) • WLAN 2.4GHz 802.11b/g/n (HT20) • WLAN 5GHz 802.11a/n (HT20/HT40) • Bluetooth v3.0+EDR, Bluetooth v4.0 LE
HW Version	V05
SW Version	C43
EUT Stage	Production Unit

Remark:

1. WLAN operation in 5600 MHz ~ 5650 MHz is notched and 802.11n-HT40 is not supported in 2.4GHz WLAN.
2. This device 2.4GHz WLAN supports Hotspot operation, and 2.4GHz WLAN supports WiFi Direct (GC/GO), and 5.2GHz / 5.3GHz / 5.5GHz supports WiFi Direct (GC only).
3. This device has no voice function.
4. This device supports inter-band LTE carrier aggregation (CA) in the downlink only. Uplink maximum output power measurement with downlink carrier aggregation active was measured to confirm that uplink maximum output power with downlink carrier aggregation active remains within the specified tune-up tolerance limits and not more than 1⁄4 dB higher than the maximum output measured without downlink carrier aggregation active.

4.2 Maximum Tune-up Limit

Mode	Average power (dBm)			
	WCDMA Band V		WCDMA Band II	
	Full power mode	Reduced power mode	Full power mode	Reduced power mode
RMC 12.2Kbps	25.0	17.0	25.0	14.5
HSDPA Subtest-1	24.0	15.5	23.5	13.0
HSDPA Subtest-2	24.0	15.5	23.5	13.0
HSDPA Subtest-3	23.5	15.0	23.0	12.5
HSDPA Subtest-4	23.5	15.0	23.0	12.5
HSUPA Subtest-1	23.5	15.5	23.5	13.5
HSUPA Subtest-2	23.0	15.0	22.5	12.5
HSUPA Subtest-3	23.0	14.5	22.5	12.5
HSUPA Subtest-4	23.0	15.0	22.5	12.5
HSUPA Subtest-5	24.0	16.0	23.5	13.5

LTE Band 17					
Average Power (dBm)					
Modulation	BW (MHz)	RB size	MPR	Full power mode	Reduced power mode
QPSK	10	≤ 12	0	22.5	16.0
QPSK	10	> 12	0-1	21.5	16.0
16QAM	10	≤ 12	0-1	21.5	15.5
16QAM	10	> 12	0-2	20.5	15.5
QPSK	5	≤ 8	0	22.5	16.0
QPSK	5	> 8	0-1	21.5	16.0
16QAM	5	≤ 8	0-1	21.5	15.5
16QAM	5	> 8	0-2	20.5	15.5

LTE Band 5					
Average Power (dBm)					
Modulation	BW (MHz)	RB size	MPR	Full power mode	Reduced power mode
QPSK	10	≤ 12	0	23.0	16.0
QPSK	10	> 12	0-1	22.0	16.0
16QAM	10	≤ 12	0-1	22.0	15.5
16QAM	10	> 12	0-2	21.0	15.5
QPSK	5	≤ 8	0	23.0	16.0
QPSK	5	> 8	0-1	22.0	16.0
16QAM	5	≤ 8	0-1	22.0	15.5
16QAM	5	> 8	0-2	21.0	15.5
QPSK	3	≤ 4	0	23.0	16.0
QPSK	3	> 4	0-1	22.0	16.0
16QAM	3	≤ 4	0-1	22.0	15.5
16QAM	3	> 4	0-2	21.0	15.5
QPSK	1.4	≤ 5	0	23.0	16.0
QPSK	1.4	> 5	0-1	22.0	16.0
16QAM	1.4	≤ 5	0-1	22.0	15.5
16QAM	1.4	> 5	0-2	21.0	15.5

LTE Band 4					
Average Power (dBm)					
Modulation	BW (MHz)	RB size	MPR	Full power mode	Reduced power mode
QPSK	20	≤ 18	0	23.5	16.5
QPSK	20	> 18	0-1	22.5	16.5
16QAM	20	≤ 18	0-1	22.5	16.0
16QAM	20	> 18	0-2	21.5	16.0
QPSK	15	≤ 16	0	23.5	16.5
QPSK	15	> 16	0-1	22.5	16.5
16QAM	15	≤ 16	0-1	22.5	16.0
16QAM	15	> 16	0-2	21.5	16.0
QPSK	10	≤ 12	0	23.5	16.5
QPSK	10	> 12	0-1	22.5	16.5
16QAM	10	≤ 12	0-1	22.5	16.0
16QAM	10	> 12	0-2	21.5	16.0
QPSK	5	≤ 8	0	23.5	16.5
QPSK	5	> 8	0-1	22.5	16.5
16QAM	5	≤ 8	0-1	22.5	16.0
16QAM	5	> 8	0-2	21.5	16.0
QPSK	3	≤ 4	0	23.5	16.5
QPSK	3	> 4	0-1	22.5	16.5
16QAM	3	≤ 4	0-1	22.5	16.0
16QAM	3	> 4	0-2	21.5	16.0
QPSK	1.4	≤ 5	0	23.5	16.5
QPSK	1.4	> 5	0-1	22.5	16.5
16QAM	1.4	≤ 5	0-1	22.5	16.0
16QAM	1.4	> 5	0-2	21.5	16.0

LTE Band 2					
Average Power (dBm)					
Modulation	BW (MHz)	RB size	MPR	Full power mode	Reduced power mode
QPSK	20	≤ 18	0	23.0	16.0
QPSK	20	> 18	0-1	22.0	16.0
16QAM	20	≤ 18	0-1	22.0	16.0
16QAM	20	> 18	0-2	21.0	16.0
QPSK	15	≤ 16	0	23.0	16.0
QPSK	15	> 16	0-1	22.0	16.0
16QAM	15	≤ 16	0-1	22.0	16.0
16QAM	15	> 16	0-2	21.0	16.0
QPSK	10	≤ 12	0	23.0	16.0
QPSK	10	> 12	0-1	22.0	16.0
16QAM	10	≤ 12	0-1	22.0	16.0
16QAM	10	> 12	0-2	21.0	16.0
QPSK	5	≤ 8	0	23.0	16.0
QPSK	5	> 8	0-1	22.0	16.0
16QAM	5	≤ 8	0-1	22.0	16.0
16QAM	5	> 8	0-2	21.0	16.0
QPSK	3	≤ 4	0	23.0	16.0
QPSK	3	> 4	0-1	22.0	16.0
16QAM	3	≤ 4	0-1	22.0	16.0
16QAM	3	> 4	0-2	21.0	16.0
QPSK	1.4	≤ 5	0	23.0	16.0
QPSK	1.4	> 5	0-1	22.0	16.0
16QAM	1.4	≤ 5	0-1	22.0	16.0
16QAM	1.4	> 5	0-2	21.0	16.0

LTE Band 7					
Average Power (dBm)					
Modulation	BW (MHz)	RB size	MPR	Full power mode	Reduced power mode
QPSK	20	≤ 18	0	22.0	12.0
QPSK	20	> 18	0-1	21.0	12.0
16QAM	20	≤ 18	0-1	21.0	12.0
16QAM	20	> 18	0-2	20.0	12.0
QPSK	15	≤ 16	0	22.0	12.0
QPSK	15	> 16	0-1	21.0	12.0
16QAM	15	≤ 16	0-1	21.0	12.0
16QAM	15	> 16	0-2	20.0	12.0
QPSK	10	≤ 12	0	22.0	12.0
QPSK	10	> 12	0-1	21.0	12.0
16QAM	10	≤ 12	0-1	21.0	12.0
16QAM	10	> 12	0-2	20.0	12.0
QPSK	5	≤ 8	0	22.0	12.0
QPSK	5	> 8	0-1	21.0	12.0
16QAM	5	≤ 8	0-1	21.0	12.0
16QAM	5	> 8	0-2	20.0	12.0

Mode			Average Power (dBm)
2.4GHz	802.11b		14.5
	802.11g		14.0
	802.11n HT20		13.0
5.2GHz	802.11a		9.5
	802.11n HT20		9.5
	802.11n HT40		11.5
5.3GHz	802.11a		9.5
	802.11n HT20		9.5
	802.11n HT40		11.0
5.5GHz	802.11a	CH 100	10.0
		CH 104	10.0
		CH 108	10.0
		CH 112	10.0
		CH 116	11.0
		CH 132	12.0
		CH 136	12.0
		CH 140	10.0
	802.11n HT20	CH 100	10.0
		CH 104	10.0
		CH 108	10.0
		CH 112	10.0
		CH 116	11.0
		CH 132	12.0
		CH 136	12.0
		CH 140	10.0
	802.11n HT40	CH 102	10.0
		CH 110	11.0
		CH 134	12.0
Bluetooth v3.0 + EDR			3.5
Bluetooth v4.0 LE			-0.5

4.3 General LTE SAR Test and Reporting Considerations

Summarized necessary items addressed in KDB 941225 D05 v02r03			
FCC ID	2ACCJB023		
Equipment Name	LTE Tablet		
Operating Frequency Range of each LTE transmission band	LTE Band 17: 706.5 MHz ~ 713.5 MHz LTE Band 5: 824.7 MHz ~ 848.3 MHz LTE Band 4: 1710.7 MHz ~ 1754.3 MHz LTE Band 2: 1850.7 MHz ~ 1909.3 MHz LTE Band 7: 2502.5 MHz ~ 2567.5 MHz		
Channel Bandwidth	5MHz, 10MHz (LTE Band 17) 1.4MHz, 3MHz, 5MHz, 10MHz (LTE Band 5) 1.4MHz, 3MHz, 5MHz, 10MHz, 15MHz, 20MHz (LTE Band 2/4) 5MHz, 10MHz, 15MHz, 20MHz (LTE Band 7)		
Release and Category	Rel10, Cat4		
Uplink Modulations used	QPSK, and 16QAM		
LTE Voice / Data requirements	Data only		
LTE MPR permanently built-in by design	Table 6.2.3-1: Maximum Power Reduction (MPR) for Power Class 3		

Modulation	Channel bandwidth / Transmission bandwidth (RB)						MPR (dB)
	1.4 MHz	3.0 MHz	5 MHz	10 MHz	15 MHz	20 MHz	
QPSK	> 5	> 4	> 8	> 12	> 16	> 18	≤ 1
16 QAM	≤ 5	≤ 4	≤ 8	≤ 12	≤ 16	≤ 18	≤ 1
16 QAM	> 5	> 4	> 8	> 12	> 16	> 18	≤ 2

LTE A-MPR	In the base station simulator configuration, Network Setting value is set to NS_01 to disable A-MPR during SAR testing and the LTE SAR tests was transmitting on all TTI frames (Maximum TTI)		
Spectrum plots for RB configuration	A properly configured base station simulator was used for the SAR and power measurement; therefore, spectrum plots for each RB allocation and offset configuration are not included in the SAR report.		
Power reduction applied to satisfy SAR compliance	Yes, proximity sensor.		
LTE Carrier Aggregation Combinations	Intra Band	Not support	
	Inter Band	B2(PCC)+B17(SCC)	5MHz(B2)+5MHz(B17)
			5MHz(B2)+10MHz(B17)
			10MHz(B2)+5MHz(B17)
			10MHz(B2)+10MHz(B17)
		B4(PCC)+B17(SCC)	5MHz(B4)+5MHz(B17)
			5MHz(B4)+10MHz(B17)
			10MHz(B4)+5MHz(B17)
			10MHz(B4)+10MHz(B17)
		B17(PCC)+B2(SCC)	5MHz(B17)+5MHz(B2)
			5MHz(B17)+10MHz(B2)
			10MHz(B17)+5MHz(B2)
			10MHz(B17)+10MHz(B2)
		B17(PCC)+B4(SCC)	5MHz(B17)+5MHz(B4)
			5MHz(B17)+10MHz(B4)
			10MHz(B17)+5MHz(B4)
			10MHz(B17)+10MHz(B4)

Transmission (H, M, L) channel numbers and frequencies in each LTE band												
LTE Band 17												
	Bandwidth 5 MHz						Bandwidth 10 MHz					
	Channel #		Freq.(MHz)				Channel #		Freq. (MHz)			
L	23755		706.5				23780		709			
M	23790		710				23790		710			
H	23825		713.5				23800		711			
LTE Band 5												
	Bandwidth 1.4 MHz		Bandwidth 3 MHz		Bandwidth 5 MHz		Bandwidth 10 MHz					
	Ch. #	Freq. (MHz)	Ch. #	Freq. (MHz)	Ch. #	Freq. (MHz)	Ch. #	Freq. (MHz)				
L	20407	824.7	20415	825.5	20425	826.5	20450	829				
M	20525	836.5	20525	836.5	20525	836.5	20525	836.5				
H	20643	848.3	20635	847.5	20625	846.5	20600	844				
LTE Band 4												
	Bandwidth 1.4 MHz		Bandwidth 3 MHz		Bandwidth 5 MHz		Bandwidth 10 MHz		Bandwidth 15 MHz		Bandwidth 20 MHz	
	Ch. #	Freq. (MHz)	Ch. #	Freq. (MHz)	Ch. #	Freq. (MHz)	Ch. #	Freq. (MHz)	Ch. #	Freq. (MHz)	Ch. #	Freq. (MHz)
L	19957	1710.7	19965	1711.5	19975	1712.5	20000	1715	20025	1717.5	20050	1720
M	20175	1732.5	20175	1732.5	20175	1732.5	20175	1732.5	20175	1732.5	20175	1732.5
H	20393	1754.3	20385	1753.5	20375	1752.5	20350	1750	20325	1747.5	20300	1745
LTE Band 2												
	Bandwidth 1.4 MHz		Bandwidth 3 MHz		Bandwidth 5 MHz		Bandwidth 10 MHz		Bandwidth 15 MHz		Bandwidth 20 MHz	
	Ch. #	Freq. (MHz)	Ch. #	Freq. (MHz)	Ch. #	Freq. (MHz)	Ch. #	Freq. (MHz)	Ch. #	Freq. (MHz)	Ch. #	Freq. (MHz)
L	18607	1850.7	18615	1851.5	18625	1852.5	18650	1855	18675	1857.5	18700	1860
M	18900	1880	18900	1880	18900	1880	18900	1880	18900	1880	18900	1880
H	19193	1909.3	19185	1908.5	19175	1907.5	19150	1905	19125	1902.5	19100	1900
LTE Band 7												
	Bandwidth 5 MHz		Bandwidth 10 MHz		Bandwidth 15 MHz		Bandwidth 20 MHz					
	Ch. #	Freq. (MHz)	Ch. #	Freq. (MHz)	Ch. #	Freq. (MHz)	Ch. #	Freq. (MHz)				
L	20775	2502.5	20800	2505	20825	2507.5	20850	2510				
M	21100	2535	21100	2535	21100	2535	21100	2535				
H	21425	2567.5	21400	2565	21375	2562.5	21350	2560				

5. Proximity Sensor Triggering Test

<Proximity Sensor Triggering Distance (KDB 616217 D04 section 6.2)>:

Proximity sensor triggering distance testing was performed according to the procedures outlined in KDB 616217 D04 section 6.2, and EUT moving further away from the flat phantom and EUT moving toward the flat phantom were both assessed. The details are illustrated in the exhibit "P-Sensor operational description", and the shortest triggering distances were reported and used for SAR assessment.
In the preliminary triggering distance testing, the tissue-equivalent medium for different frequency bands were used for verification; no other frequency bands tissue-equivalent medium was found to result in shortest triggering distance than that for 1900MHz, and the tissue-equivalent medium for 1900MHz was used for formal proximity sensor triggering testing.

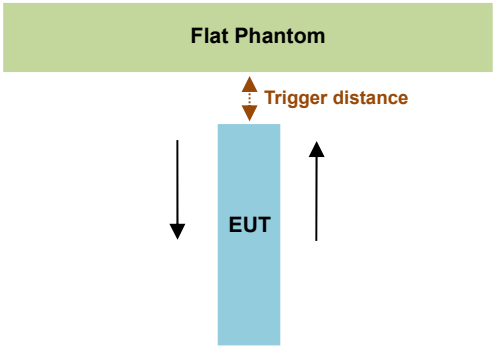

Proximity Sensor Trigger Distance (mm)		
Position	Bottom Face	Edge 1
Minimum	24	19

<Proximity Sensor Triggering Coverage (KDB 616217 D04 section 6.3)>:

If a sensor is spatially offset from the antenna(s), it is necessary to verify sensor triggering for conditions where the antenna is next to the user but the sensor is laterally further away to ensure sensor coverage is sufficient for reducing the power to maintain compliance. For p-sensor coverage testing, the device is moved and "along the direction of maximum antenna and sensor offset".
Illustrated in the internal photo exhibit, although the senor is spatially offset, there is no trigger condition where the antenna is next to the user but the sensor is laterally further away, therefore proximity sensor coverage testing is not required.
This procedure is not required because antenna and sensor are collocated and the peak SAR location is overlapping with the sensor.

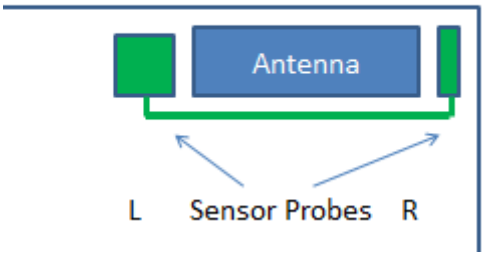

<Tablet Tilt angle influences to proximity sensor triggering (KDB 616217 D04 section 6.4)>:

The influence of table tilt angles to proximity sensor triggering was determined by positioning each tablet edge that contains a transmitting antenna, perpendicular to the flat phantom, at 19 mm separation.
Rotating the tablet around the edge next to the phantom in ≤ 10° increments until the tablet is ± 45° from the vertical position at 0°, and the maximum output power remains in the reduced mode.

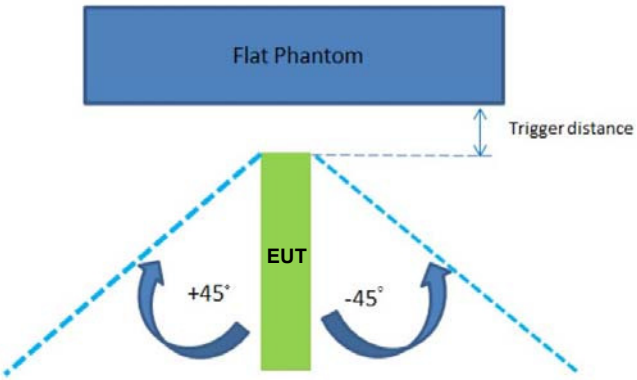

The Sensor Trigger Distance (mm)	
Position	Edge 1
Minimum	19

<Proximity sensor power reduction>

Exposure Position / wireless mode	Bottom Face(1)	Edge 1(1)	Edge 2	Edge 3	Edge 4
WCDMA Band V RMC 12.2Kbps	8.0 dB	8.0 dB	0 dB	0 dB	0 dB
WCDMA Band II RMC 12.2Kbps	10.5 dB	10.5 dB	0 dB	0 dB	0 dB
LTE Band 17 (BW10,RB Size 1,RB Offset 0)	6.5 dB	6.5 dB	0 dB	0 dB	0 dB
LTE Band 5 (BW10,RB Size 1,RB Offset 0)	7.0 dB	7.0 dB	0 dB	0 dB	0 dB
LTE Band 4 (BW20,RB Size 1,RB Offset 0)	7.0 dB	7.0 dB	0 dB	0 dB	0 dB
LTE Band 2 (BW20,RB Size 1,RB Offset 0)	7.0 dB	7.0 dB	0 dB	0 dB	0 dB
LTE Band 7 (BW20,RB Size 1,RB Offset 0)	10.0 dB	10.0 dB	0 dB	0 dB	0 dB

Remark:

1. (1): Reduced maximum limit applied by activation of proximity sensor.
2. Power reduction is not applicable for WLAN and Bluetooth.
3. Tests were performed in accordance with KDB 616217 D04 section 6.1, 6.2, 6.3, 6.4 and 6.5.
4. For verification of compliance of power reduction scheme, additional SAR testing with EUT transmitting at full RF power at a conservative trigger distance was performed:
   - Bottom Face: 17 mm
   - Edge1: 17 mm

<Power Measurement during Sensor Trigger distance testing>

Band/Mode	Ch #	Measured power reduction (dBm)		Reduction Levels
		w/o power back-off	w/ power back-off	(dB)
WCDMA Band V RMC 12.2Kbps	4182	24.47	16.45	8.02
WCDMA Band II RMC 12.2Kbps	9400	24.36	13.94	10.42
LTE Band 17 (BW10,RB Size 1,RB Offset 0)	23790	22.10	15.05	7.05
LTE Band 5 (BW10,RB Size 1,RB Offset 0)	20525	22.11	15.14	6.97
LTE Band 4 (BW20,RB Size 1,RB Offset 0)	20175	22.57	15.82	6.75
LTE Band 2 (BW20,RB Size 1,RB Offset 0)	18900	21.82	15.43	6.39
LTE Band 7 (BW20,RB Size 1,RB Offset 0)	21100	21.20	11.50	9.70

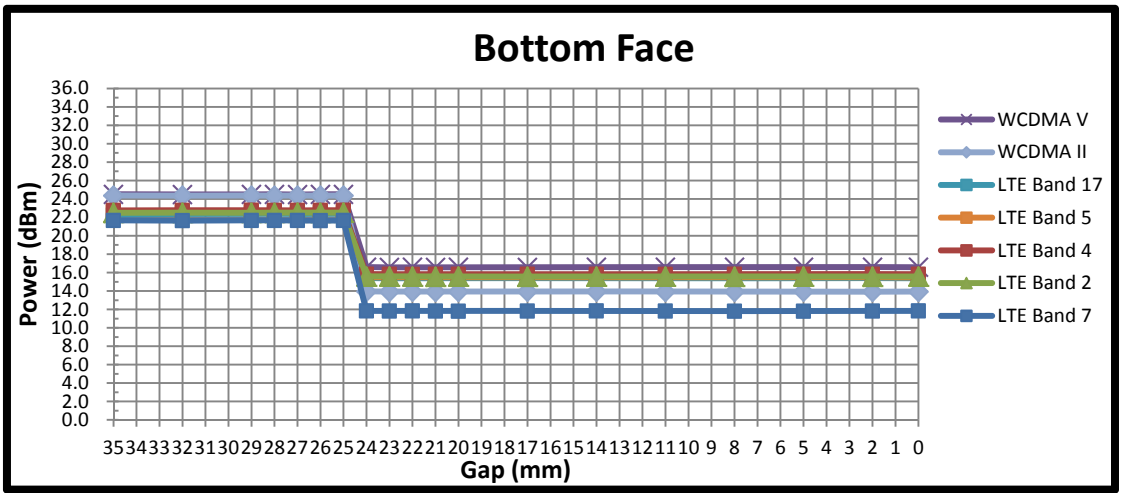

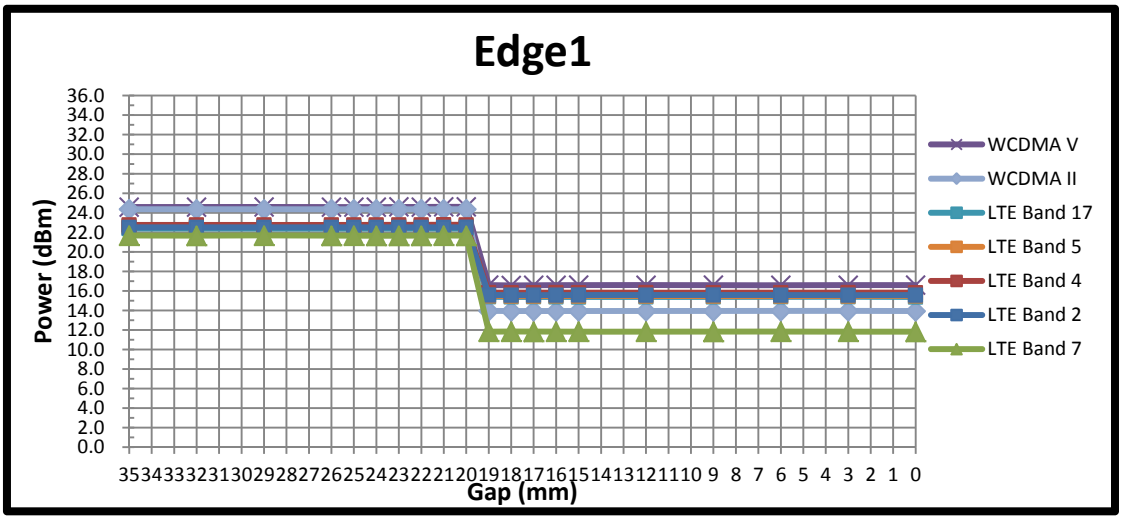

6. RF Exposure Limits

6.1 Uncontrolled Environment

Uncontrolled Environments are defined as locations where there is the exposure of individuals who have no knowledge or control of their exposure. The general population/uncontrolled exposure limits are applicable to situations in which the general public may be exposed or in which persons who are exposed as a consequence of their employment may not be made fully aware of the potential for exposure or cannot exercise control over their exposure. Members of the general public would come under this category when exposure is not employment-related; for example, in the case of a wireless transmitter that exposes persons in its vicinity.

6.2 Controlled Environment

Controlled Environments are defined as locations where there is exposure that may be incurred by persons who are aware of the potential for exposure, (i.e. as a result of employment or occupation). In general, occupational/controlled exposure limits are applicable to situations in which persons are exposed as a consequence of their employment, who have been made fully aware of the potential for exposure and can exercise control over their exposure. The exposure category is also applicable when the exposure is of a transient nature due to incidental passage through a location where the exposure levels may be higher than the general population/uncontrolled limits, but the exposed person is fully aware of the potential for exposure and can exercise control over his or her exposure by leaving the area or by some other appropriate means.

Limits for Occupational/Controlled Exposure (W/kg)

Whole-Body	Partial-Body	Hands, Wrists, Feet and Ankles
0.4	8.0	20.0

Limits for General Population/Uncontrolled Exposure (W/kg)

Whole-Body	Partial-Body	Hands, Wrists, Feet and Ankles
0.08	1.6	4.0

Whole-Body SAR is averaged over the entire body, partial-body SAR is averaged over any 1gram of tissue defined as a tissue volume in the shape of a cube. SAR for hands, wrists, feet and ankles is averaged over any 10 grams of tissue defined as a tissue volume in the shape of a cube.

7. Specific Absorption Rate (SAR)

7.1 Introduction

SAR is related to the rate at which energy is absorbed per unit mass in an object exposed to a radio field. The SAR distribution in a biological body is complicated and is usually carried out by experimental techniques or numerical modeling. The standard recommends limits for two tiers of groups, occupational/controlled and general population/uncontrolled, based on a person's awareness and ability to exercise control over his or her exposure. In general, occupational/controlled exposure limits are higher than the limits for general population/uncontrolled.

7.2 SAR Definition

The SAR definition is the time derivative (rate) of the incremental energy (dW) absorbed by (dissipated in) an incremental mass (dm) contained in a volume element (dv) of a given density (ρ). The equation description is as below:

$$\mathbf{SAR} = \frac{\mathbf{d}}{\mathbf{dt}}\left(\frac{\mathbf{dW}}{\mathbf{dm}}\right) = \frac{\mathbf{d}}{\mathbf{dt}}\left(\frac{\mathbf{dW}}{\boldsymbol{\rho}\mathbf{dv}}\right)$$

SAR is expressed in units of Watts per kilogram (W/kg)

$$\mathbf{SAR} = \frac{\boldsymbol{\sigma}|\mathbf{E}|^2}{\boldsymbol{\rho}}$$

Where: σ is the conductivity of the tissue, ρ is the mass density of the tissue and E is the RMS electrical field strength.

8. System Description and Setup

The DASY system used for performing compliance tests consists of the following items:

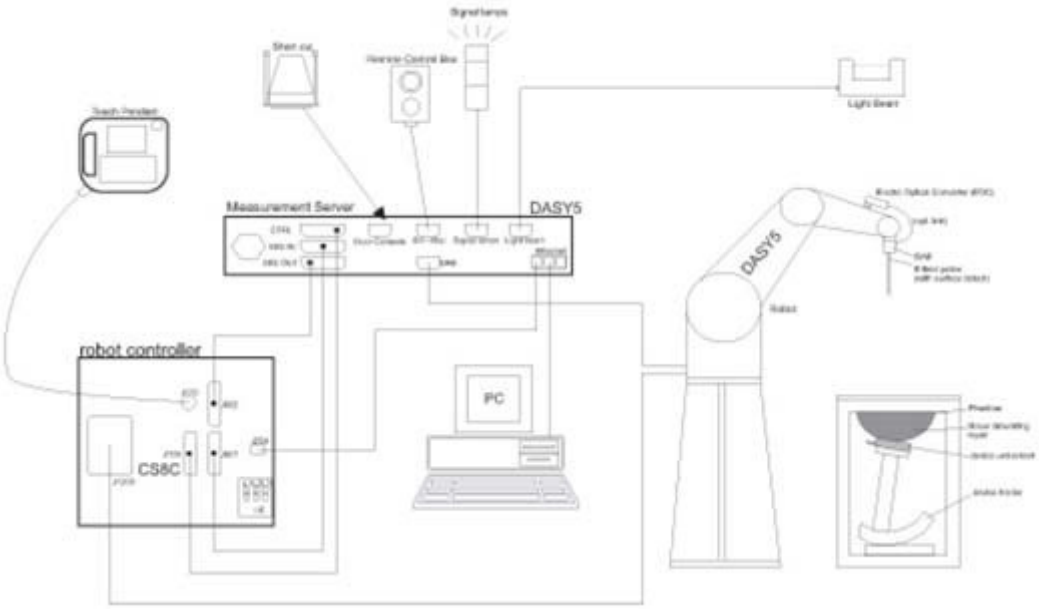

- A standard high precision 6-axis robot with controller, teach pendant and software. An arm extension for accommodating the data acquisition electronics (DAE).
- An isotropic Field probe optimized and calibrated for the targeted measurement.
- A data acquisition electronics (DAE) which performs the signal amplification, signal multiplexing, AD-conversion, offset measurements, mechanical surface detection, collision detection, etc. The unit is battery powered with standard or rechargeable batteries. The signal is optically transmitted to the EOC.
- The Electro-optical converter (EOC) performs the conversion from optical to electrical signals for the digital communication to the DAE. To use optical surface detection, a special version of the EOC is required. The EOC signal is transmitted to the measurement server.
- The function of the measurement server is to perform the time critical tasks such as signal filtering, control of the robot operation and fast movement interrupts.
- The Light Beam used is for probe alignment. This improves the (absolute) accuracy of the probe positioning.
- A computer running WinXP or Win7 and the DASY5 software.
- Remote control and teach pendant as well as additional circuitry for robot safety such as warning lamps, etc.
- The phantom, the device holder and other accessories according to the targeted measurement.

9. Measurement Procedures

The measurement procedures are as follows:

<Conducted power measurement>

(a) For WWAN power measurement, use base station simulator to configure EUT WWAN transmission in conducted connection with RF cable, at maximum power in each supported wireless interface and frequency band.
(b) Read the WWAN RF power level from the base station simulator.
(c) For WLAN/BT power measurement, use engineering software to configure EUT WLAN/BT continuously transmission, at maximum RF power in each supported wireless interface and frequency band
(d) Connect EUT RF port through RF cable to the power meter, and measure WLAN/BT output power

<SAR measurement>

(a) Use base station simulator to configure EUT WWAN transmission in radiated connection, and engineering software to configure EUT WLAN/BT continuously transmission, at maximum RF power, in the highest power channel.
(b) Place the EUT in the positions as Appendix D demonstrates.
(c) Set scan area, grid size and other setting on the DASY software.
(d) Measure SAR results for the highest power channel on each testing position.
(e) Find out the largest SAR result on these testing positions of each band
(f) Measure SAR results for other channels in worst SAR testing position if the reported SAR of highest power channel is larger than 0.8 W/kg

According to the test standard, the recommended procedure for assessing the peak spatial-average SAR value consists of the following steps:

(a) Power reference measurement
(b) Area scan
(c) Zoom scan
(d) Power drift measurement

9.1 Spatial Peak SAR Evaluation

The procedure for spatial peak SAR evaluation has been implemented according to the test standard. It can be conducted for 1g and 10g, as well as for user-specific masses. The DASY software includes all numerical procedures necessary to evaluate the spatial peak SAR value.

The base for the evaluation is a "cube" measurement. The measured volume must include the 1g and 10g cubes with the highest averaged SAR values. For that purpose, the center of the measured volume is aligned to the interpolated peak SAR value of a previously performed area scan.

The entire evaluation of the spatial peak values is performed within the post-processing engine (SEMCAD). The system always gives the maximum values for the 1g and 10g cubes. The algorithm to find the cube with highest averaged SAR is divided into the following stages:

(a) Extraction of the measured data (grid and values) from the Zoom Scan
(b) Calculation of the SAR value at every measurement point based on all stored data (A/D values and measurement parameters)
(c) Generation of a high-resolution mesh within the measured volume
(d) Interpolation of all measured values form the measurement grid to the high-resolution grid
(e) Extrapolation of the entire 3-D field distribution to the phantom surface over the distance from sensor to surface
(f) Calculation of the averaged SAR within masses of 1g and 10g

9.2 Power Reference Measurement

The Power Reference Measurement and Power Drift Measurements are for monitoring the power drift of the device under test in the batch process. The minimum distance of probe sensors to surface determines the closest measurement point to phantom surface. This distance cannot be smaller than the distance of sensor calibration points to probe tip as defined in the probe properties.

9.3 Area Scan

The area scan is used as a fast scan in two dimensions to find the area of high field values, before doing a fine measurement around the hot spot. The sophisticated interpolation routines implemented in DASY software can find the maximum found in the scanned area, within a range of the global maximum. The range (in dB0 is specified in the standards for compliance testing. For example, a 2 dB range is required in IEEE standard 1528 and IEC 62209 standards, whereby 3 dB is a requirement when compliance is assessed in accordance with the ARIB standard (Japan), if only one zoom scan follows the area scan, then only the absolute maximum will be taken as reference. For cases where multiple maximums are detected, the number of zoom scans has to be increased accordingly.

Area scan parameters extracted from FCC KDB 865664 D01v01r03 SAR measurement 100 MHz to 6 GHz.

	≤ 3 GHz	> 3 GHz
Maximum distance from closest measurement point (geometric center of probe sensors) to phantom surface	5 ± 1 mm	½·δ·ln(2) ± 0.5 mm
Maximum probe angle from probe axis to phantom surface normal at the measurement location	30° ± 1°	20° ± 1°
Maximum area scan spatial resolution: Δx_{Area}, Δy_{Area}	≤ 2 GHz: ≤ 15 mm 2 – 3 GHz: ≤ 12 mm	3 – 4 GHz: ≤ 12 mm 4 – 6 GHz: ≤ 10 mm
	When the x or y dimension of the test device, in the measurement plane orientation, is smaller than the above, the measurement resolution must be ≤ the corresponding x or y dimension of the test device with at least one measurement point on the test device.	

9.4 Zoom Scan

Zoom scans are used assess the peak spatial SAR values within a cubic averaging volume containing 1 gram and 10 gram of simulated tissue. The zoom scan measures points (refer to table below) within a cube shoes base faces are centered on the maxima found in a preceding area scan job within the same procedure. When the measurement is done, the zoom scan evaluates the averaged SAR for 1 gram and 10 gram and displays these values next to the job's label.

Zoom scan parameters extracted from FCC KDB 865664 D01v01r03 SAR measurement 100 MHz to 6 GHz.

			≤ 3 GHz	> 3 GHz
Maximum zoom scan spatial resolution: Δx_{Zoom}, Δy_{Zoom}			≤ 2 GHz: ≤ 8 mm 2 – 3 GHz: ≤ 5 mm*	3 – 4 GHz: ≤ 5 mm* 4 – 6 GHz: ≤ 4 mm*
Maximum zoom scan spatial resolution, normal to phantom surface	uniform grid: $\Delta z_{Zoom}(n)$		≤ 5 mm	3 – 4 GHz: ≤ 4 mm 4 – 5 GHz: ≤ 3 mm 5 – 6 GHz: ≤ 2 mm
	graded grid	$\Delta z_{Zoom}(1)$: between 1st two points closest to phantom surface	≤ 4 mm	3 – 4 GHz: ≤ 3 mm 4 – 5 GHz: ≤ 2.5 mm 5 – 6 GHz: ≤ 2 mm
		$\Delta z_{Zoom}(n>1)$: between subsequent points	$\leq 1.5 \cdot \Delta z_{Zoom}(n-1)$	
Minimum zoom scan volume	x, y, z		≥ 30 mm	3 – 4 GHz: ≥ 28 mm 4 – 5 GHz: ≥ 25 mm 5 – 6 GHz: ≥ 22 mm

Note: δ is the penetration depth of a plane-wave at normal incidence to the tissue medium; see draft standard IEEE P1528-2011 for details.

* When zoom scan is required and the *reported* SAR from the *area scan based 1-g SAR estimation* procedures of KDB 447498 is ≤ 1.4 W/kg, ≤ 8 mm, ≤ 7 mm and ≤ 5 mm zoom scan resolution may be applied, respectively, for 2 GHz to 3 GHz, 3 GHz to 4 GHz and 4 GHz to 6 GHz.

9.5 Volume Scan Procedures

The volume scan is used for assess overlapping SAR distributions for antennas transmitting in different frequency bands. It is equivalent to an oversized zoom scan used in standalone measurements. The measurement volume will be used to enclose all the simultaneous transmitting antennas. For antennas transmitting simultaneously in different frequency bands, the volume scan is measured separately in each frequency band. In order to sum correctly to compute the 1g aggregate SAR, the EUT remain in the same test position for all measurements and all volume scan use the same spatial resolution and grid spacing. When all volume scan were completed, the software, SEMCAD postprocessor can combine and subsequently superpose these measurement data to calculating the multiband SAR.

9.6 Power Drift Monitoring

All SAR testing is under the EUT install full charged battery and transmit maximum output power. In DASY measurement software, the power reference measurement and power drift measurement procedures are used for monitoring the power drift of EUT during SAR test. Both these procedures measure the field at a specified reference position before and after the SAR testing. The software will calculate the field difference in dB. If the power drifts more than 5%, the SAR will be retested.

10. Test Equipment List

Manufacturer	Name of Equipment	Type/Model	Serial Number	Calibration	
				Last Cal.	Due Date
SPEAG	750MHz System Validation Kit	D750V3	1012	May 16, 2014	May 15, 2015
SPEAG	835MHz System Validation Kit	D835V2	4d151	Mar. 25, 2013	Mar. 23, 2015
SPEAG	1750MHz System Validation Kit	D1750V2	1090	Mar. 27, 2013	Mar. 25, 2015
SPEAG	1900MHz System Validation Kit	D1900V2	5d170	Mar. 27, 2013	Mar. 25, 2015
SPEAG	2450MHz System Validation Kit	D2450V2	908	Mar. 26, 2013	Mar. 24, 2015
SPEAG	2600MHz System Validation Kit	D2600V2	1061	Nov. 19, 2014	Nov. 18, 2015
SPEAG	5000MHz System Validation Kit	D5GHzV2	1128	Jul. 22, 2014	Jul. 21, 2015
SPEAG	Data Acquisition Electronics	DAE4	910	Jul. 22, 2014	Jul. 21, 2015
SPEAG	Dosimetric E-Field Probe	EX3DV4	3819	Nov. 13, 2014	Nov. 12, 2015
SPEAG	ELI4 Phantom	QD OVA 002 AA	1149	NCR	NCR
SPEAG	Phone Positioner	N/A	N/A	NCR	NCR
Anritsu	Radio communication analyzer	MT8820C	6201300653	Jul. 17, 2014	Jul. 16, 2015
R&S	Signal Generator	SMJ100A	101909	Feb. 05, 2014	Feb. 04, 2015
R&S	Network Analyzer	ZVB8	100106	Sep. 29, 2014	Sep. 28, 2015
SPEAG	Dielectric Assessment Kit	DAK-3.5	1032	NCR	NCR
Anritsu	Power Meter	ML2495A	1218010	Mar. 03, 2014	Mar. 02, 2015
Anritsu	Power Sensor	MA2411B	1207253	Mar. 03, 2014	Mar. 02, 2015
ARRA	Power Divider	A3200-2	N/A	NA	NA
R&S	Spectrum Analyzer	FSP30	101362	Sep. 29, 2014	Sep. 28, 2015
Agilent	Dual Directional Coupler	778D	50422	Note 1	
Woken	Attenuator 1	WK0602-XX	N/A	Note1	
PE	Attenuator 2	PE7005-10	N/A	Note1	
PE	Attenuator 3	PE7005- 3	N/A	Note1	
AR	Power Amplifier	5S1G4M2	0328767	Note1	
Mini-Circuits	Power Amplifier	ZVE-3W	162601250	Note1	
Mini-Circuits	Power Amplifier	ZHL-42W+	13440021344	Note1	

General Note:

1. Prior to system verification and validation, the path loss from the signal generator to the system check source and the power meter, which includes the amplifier, cable, attenuator and directional coupler, was measured by the network analyzer. The reading of the power meter was offset by the path loss difference between the path to the power meter and the path to the system check source to monitor the actual power level fed to the system check source.
2. Referring to KDB 865664 D01v01r03, the dipole calibration interval can be extended to 3 years with justification. The dipoles are also not physically damaged, or repaired during the interval.
3. The justification data of dipole D835V2, SN: 4d151, D1750V2, SN: 1090, D1900V2, SN: 5d170 and D2450V2, SN: 908 can be found in appendix C. The return loss is < -20dB, within 20% of prior calibration, the impedance is within 5 ohm of prior calibration.

11. System Verification

11.1 Tissue Verification

The following tissue formulations are provided for reference only as some of the parameters have not been thoroughly verified. The composition of ingredients may be modified accordingly to achieve the desired target tissue parameters required for routine SAR evaluation.

Frequency (MHz)	Water (%)	Sugar (%)	Cellulose (%)	Salt (%)	Preventol (%)	DGBE (%)	Conductivity (σ)	Permittivity (εr)
For Body								
750	51.7	47.2	0	0.9	0.1	0	0.96	55.5
835	50.8	48.2	0	0.9	0.1	0	0.97	55.2
1750	70.2	0	0	0.4	0	29.4	1.49	53.4
1800, 1900, 2000	70.2	0	0	0.4	0	29.4	1.52	53.3
2450	68.6	0	0	0	0	31.4	1.95	52.7
2600	68.1	0	0	0.1	0	31.8	2.16	52.5

Simulating Liquid for 5GHz, Manufactured by SPEAG

Ingredients	(% by weight)
Water	64~78%
Mineral oil	11~18%
Emulsifiers	9~15%
Additives and Salt	2~3%

<Tissue Dielectric Parameter Check Results>

Frequency (MHz)	Tissue Type	Liquid Temp. (℃)	Conductivity (σ)	Permittivity (ε_r)	Conductivity Target (σ)	Permittivity Target (ε_r)	Delta (σ) (%)	Delta (ε_r) (%)	Limit (%)	Date
750	Body	22.7	0.971	54.634	0.96	55.50	1.15	-1.56	±5	Jan. 09, 2015
835	Body	22.8	0.972	53.975	0.97	55.20	0.21	-2.22	±5	Jan. 09, 2015
1750	Body	22.6	1.527	51.995	1.49	53.40	2.48	-2.63	±5	Jan. 10, 2015
1900	Body	22.6	1.538	53.790	1.52	53.30	1.18	0.92	±5	Jan. 10, 2015
2450	Body	22.7	1.991	52.320	1.95	52.70	2.10	-0.72	±5	Jan. 18, 2015
2600	Body	22.6	2.209	51.123	2.16	52.50	2.27	-2.62	±5	Jan. 11, 2015
5200	Body	22.7	5.137	48.164	5.30	49.00	-3.08	-1.71	±5	Jan. 20, 2015
5300	Body	22.7	5.251	47.988	5.42	48.90	-3.12	-1.87	±5	Jan. 20, 2015
5600	Body	22.8	5.644	47.452	5.77	48.50	-2.18	-2.16	±5	Jan. 20, 2015

11.2 System Performance Check Results

Comparing to the original SAR value provided by SPEAG, the verification data should be within its specification of 10 %. Below table shows the target SAR and measured SAR after normalized to 1W input power. The table below indicates the system performance check can meet the variation criterion and the plots can be referred to Appendix A of this report.

Date	Frequency (MHz)	Tissue Type	Input Power (mW)	Dipole S/N	Probe S/N	DAE S/N	Measured SAR (W/kg)	Targeted SAR (W/kg)	Normalized SAR (W/kg)	Deviation (%)
Jan. 09, 2015	750	Body	250	1012	3819	910	2.28	8.65	9.12	5.43
Jan. 09, 2015	835	Body	250	4d151	3819	910	2.44	9.43	9.76	3.50
Jan. 10, 2015	1750	Body	250	1090	3819	910	10.30	38.10	41.2	8.14
Jan. 10, 2015	1900	Body	250	5d170	3819	910	11.00	41.20	44	6.80
Jan. 18, 2015	2450	Body	250	908	3819	910	12.30	50.40	49.2	-2.38
Jan. 11, 2015	2600	Body	250	1061	3819	910	14.00	54.90	56	2.00
Jan. 20, 2015	5200	Body	100	1128	3819	910	8.17	76.20	81.7	7.22
Jan. 20, 2015	5300	Body	100	1128	3819	910	7.45	77.70	74.5	-4.12
Jan. 20, 2015	5600	Body	100	1128	3819	910	8.28	81.50	82.8	1.60

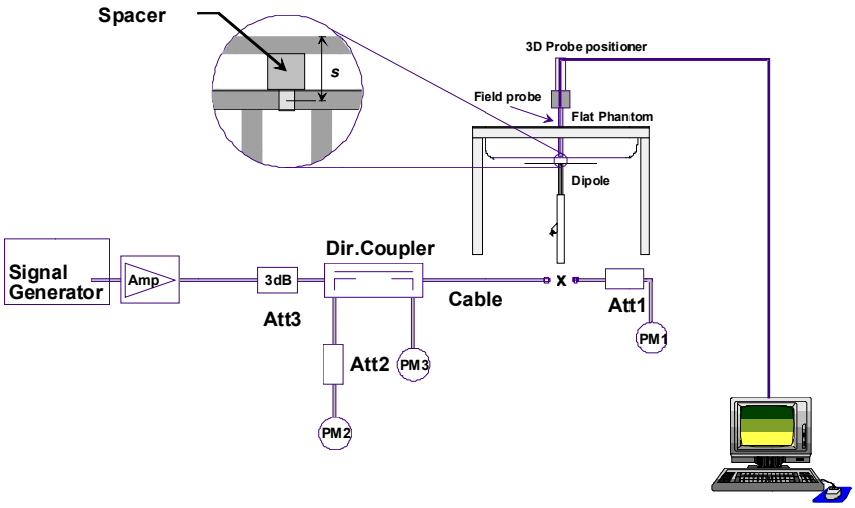

Fig 8.3.1 System Performance Check Setup

Fig 8.3.2 Setup Photo

12. RF Exposure Positions

12.1 SAR Testing for Tablet

This device can be used also in full sized tablet exposure conditions, due to its size. Per FCC KDB 616217, the back surface and edges of the tablet should be tested for SAR compliance with the tablet touching the phantom. The SAR exclusion threshold in KDB 447498 D01v05r02 can be applied to determine SAR test exclusion for adjacent edge configurations. The closest distance from the antenna to an adjacent tablet edge is used to determine if SAR testing is required for the adjacent edges, with the adjacent edge positioned against the phantom and the edge containing the antenna positioned perpendicular to the phantom.

This EUT was tested in five different positions. They are bottom-face of tablet PC, Edge1, Edge2, Edge3 and Edge4. EUT has proximity sensor function, it would be on bottom-face and Edge1 active, the sensor trigger distance is 1.7cm for bottom-face and Edge1, EUT transmitting full power in normal mode was performed. Additional the surface of EUT is touching with phantom 0 cm for bottom-face and Edge1 with reduce power, Edge2, Edge3 and Edge4 with full power.

13. Conducted RF Output Power (Unit: dBm)

<WCDMA Conducted Power>

1. The following tests were conducted according to the test requirements outlines in 3GPP TS 34.121 specification.
2. The procedures in KDB 941225 D01 are applied for 3GPP Rel. 6 HSPA to configure the device in the required sub-test mode(s) to determine SAR test exclusion.

A summary of these settings are illustrated below:

HSDPA Setup Configuration:

a. The EUT was connected to Base Station Agilent E5515C referred to the Setup Configuration.
b. The RF path losses were compensated into the measurements.
c. A call was established between EUT and Base Station with following setting:
   i. Set Gain Factors (β_c and β_d) and parameters were set according to each
   ii. Specific sub-test in the following table, C10.1.4, quoted from the TS 34.121
   iii. Set RMC 12.2Kbps + HSDPA mode.
   iv. Set Cell Power = -86 dBm
   v. Set HS-DSCH Configuration Type to FRC (H-set 1, QPSK)
   vi. Select HSDPA Uplink Parameters
   vii. Set Delta ACK, Delta NACK and Delta CQI = 8
   viii. Set Ack-Nack Repetition Factor to 3
   ix. Set CQI Feedback Cycle (k) to 4 ms
   x. Set CQI Repetition Factor to 2
   xi. Power Ctrl Mode = All Up bits
d. The transmitted maximum output power was recorded.

Table C.10.1.4: β values for transmitter characteristics tests with HS-DPCCH

Sub-test	β_c	β_d	β_d (SF)	β_c/β_d	β_{HS} (Note1, Note 2)	CM (dB) (Note 3)	MPR (dB) (Note 3)
1	2/15	15/15	64	2/15	4/15	0.0	0.0
2	12/15 (Note 4)	15/15 (Note 4)	64	12/15 (Note 4)	24/15	1.0	0.0
3	15/15	8/15	64	15/8	30/15	1.5	0.5
4	15/15	4/15	64	15/4	30/15	1.5	0.5

Note 1: Δ_{ACK}, Δ_{NACK} and Δ_{CQI} = 30/15 with β_{hs} = 30/15 * β_c.

Note 2: For the HS-DPCCH power mask requirement test in clause 5.2C, 5.7A, and the Error Vector Magnitude (EVM) with HS-DPCCH test in clause 5.13.1A, and HSDPA EVM with phase discontinuity in clause 5.13.1AA, Δ_{ACK} and Δ_{NACK} = 30/15 with β_{hs} = 30/15 * β_c, and Δ_{CQI} = 24/15 with β_{hs} = 24/15 * β_c.

Note 3: CM = 1 for β_c/β_d =12/15, β_{hs}/β_c=24/15. For all other combinations of DPDCH, DPCCH and HS-DPCCH the MPR is based on the relative CM difference. This is applicable for only UEs that support HSDPA in release 6 and later releases.

Note 4: For subtest 2 the β_c/β_d ratio of 12/15 for the TFC during the measurement period (TF1, TF0) is achieved by setting the signalled gain factors for the reference TFC (TF1, TF1) to β_c = 11/15 and β_d = 15/15.

Setup Configuration

HSUPA Setup Configuration:

a. The EUT was connected to Base Station Agilent E5515C referred to the Setup Configuration.
b. The RF path losses were compensated into the measurements.
c. A call was established between EUT and Base Station with following setting * :
   i. Call Configs = 5.2B, 5.9B, 5.10B, and 5.13.2B with QPSK
   ii. Set the Gain Factors (β_c and β_d) and parameters (AG Index) were set according to each specific sub-test in the following table, C11.1.3, quoted from the TS 34.121
   iii. Set Cell Power = -86 dBm
   iv. Set Channel Type = 12.2k + HSPA
   v. Set UE Target Power
   vi. Power Ctrl Mode= Alternating bits
   vii. Set and observe the E-TFCI
   viii. Confirm that E-TFCI is equal to the target E-TFCI of 75 for sub-test 1, and other subtest's E-TFCI
d. The transmitted maximum output power was recorded.

Table C.11.1.3: β values for transmitter characteristics tests with HS-DPCCH and E-DCH

Sub-test	β_c	β_d	β_d (SF)	β_c/β_d	β_{HS} (Note1)	β_{ec}	β_{ed} (Note 5) (Note 6)	β_{ed} (SF)	β_{ed} (Codes)	CM (dB) (Note 2)	MPR (dB) (Note 2)	AG Index (Note 6)	E-TFCI
1	11/15 (Note 3)	15/15 (Note 3)	64	11/15 (Note 3)	22/15	209/225	1309/225	4	1	1.0	0.0	20	75
2	6/15	15/15	64	6/15	12/15	12/15	94/75	4	1	3.0	2.0	12	67
3	15/15	9/15	64	15/9	30/15	30/15	β_{ed}1: 47/15 β_{ed}2: 47/15	4 4	2	2.0	1.0	15	92
4	2/15	15/15	64	2/15	4/15	2/15	56/75	4	1	3.0	2.0	17	71
5	15/15 (Note 4)	15/15 (Note 4)	64	15/15 (Note 4)	30/15	24/15	134/15	4	1	1.0	0.0	21	81

Note 1: Δ_{ACK}, Δ_{NACK} and Δ_{CQI} = 30/15 with β_{hs} = 30/15 * β_c .

Note 2: CM = 1 for β_c/β_d =12/15, β_{hs}/β_c=24/15. For all other combinations of DPDCH, DPCCH, HS- DPCCH, E-DPDCH and E-DPCCH the MPR is based on the relative CM difference.

Note 3: For subtest 1 the β_c/β_d ratio of 11/15 for the TFC during the measurement period (TF1, TF0) is achieved by setting the signalled gain factors for the reference TFC (TF1, TF1) to β_c = 10/15 and β_d = 15/15.

Note 4: For subtest 5 the β_c/β_d ratio of 15/15 for the TFC during the measurement period (TF1, TF0) is achieved by setting the signalled gain factors for the reference TFC (TF1, TF1) to β_c = 14/15 and β_d = 15/15.

Note 5: In case of testing by UE using E-DPDCH Physical Layer category 1, Sub-test 3 is omitted according to TS25.306 Table 5.1g.

Note 6: β_{ed} can not be set directly, it is set by Absolute Grant Value.

Setup Configuration

<WCDMA Conducted Power>

General Note:

1. Per KDB 941225 D01v03, SAR for Body exposure is measured using a 12.2 kbps RMC with TPC bits configured to all "1's".
2. Per KDB 941225 D01v03, RMC 12.2kbps setting is used to evaluate SAR when EUT operating without power back-off and operating with power back-off. If the maximum output power and tune-up tolerance specified for production units in HSDPA / HSUPA is ≤ ¼ dB higher than RMC 12.2Kbps or when the highest reported SAR of the RMC12.2Kbps is scaled by the ratio of specified maximum output power and tune-up tolerance of HSDPA / HSUPA to RMC12.2Kbps and the adjusted SAR is ≤ 1.2 W/kg, SAR measurement is not required for HSDPA / HSUPA.

Maximum Average RF Power (Proximity Sensor Inactive)

Band			WCDMA Band V				WCDMA Band II			
Tx Channel			4132	4182	4233	Tune-up Limit (dBm)	9262	9400	9538	Tune-up Limit (dBm)
Rx Channel			4357	4407	4458		9662	9800	9938	
Frequency (MHz)			826.4	836.4	846.6		1852.4	1880	1907.6	
MPR (dB)	3GPP Rel 99	RMC 12.2Kbps	**24.60**	24.47	24.55	25.0	24.12	**24.36**	24.34	25.0
0	3GPP Rel 6	HSDPA Subtest-1	23.47	23.31	23.47	24.0	22.76	22.95	22.97	23.5
0	3GPP Rel 6	HSDPA Subtest-2	23.50	23.34	23.53	24.0	22.81	22.99	22.95	23.5
0.5	3GPP Rel 6	HSDPA Subtest-3	22.96	22.95	23.01	23.5	22.24	22.13	22.45	23.0
0.5	3GPP Rel 6	HSDPA Subtest-4	22.96	22.94	23.01	23.5	22.20	22.46	22.07	23.0
0	3GPP Rel 6	HSUPA Subtest-1	23.43	23.19	22.82	23.5	23.00	22.72	22.79	23.5
2	3GPP Rel 6	HSUPA Subtest-2	22.46	22.42	22.25	23.0	21.68	21.95	21.55	22.5
1	3GPP Rel 6	HSUPA Subtest-3	22.03	21.89	22.31	23.0	22.06	21.68	21.45	22.5
2	3GPP Rel 6	HSUPA Subtest-4	22.44	22.58	22.71	23.0	21.76	21.95	21.98	22.5
0	3GPP Rel 6	HSUPA Subtest-5	23.40	23.20	23.50	24.0	22.90	23.10	23.00	23.5

Reduced Average RF Power (Proximity Sensor Active)

Band			WCDMA Band V				WCDMA Band II			
Tx Channel			4132	4182	4233	Tune-up Limit (dBm)	9262	9400	9538	Tune-up Limit (dBm)
Rx Channel			4357	4407	4458		9662	9800	9938	
Frequency (MHz)			826.4	836.4	846.6		1852.4	1880	1907.6	
MPR (dB)	3GPP Rel 99	RMC 12.2Kbps	**16.59**	16.45	16.55	17.0	13.72	**13.94**	13.75	14.5
0	3GPP Rel 6	HSDPA Subtest-1	15.15	15.10	15.24	15.5	12.60	12.69	12.69	13.0
0	3GPP Rel 6	HSDPA Subtest-2	15.34	15.32	15.38	15.5	12.70	12.83	12.85	13.0
0.5	3GPP Rel 6	HSDPA Subtest-3	14.80	14.77	14.96	15.0	12.16	12.39	12.34	12.5
0.5	3GPP Rel 6	HSDPA Subtest-4	14.80	14.78	14.96	15.0	12.15	12.41	12.33	12.5
0	3GPP Rel 6	HSUPA Subtest-1	15.42	15.19	14.82	15.5	13.01	12.71	12.78	13.5
2	3GPP Rel 6	HSUPA Subtest-2	14.46	14.41	14.25	15.0	11.67	11.95	11.54	12.5
1	3GPP Rel 6	HSUPA Subtest-3	14.04	13.89	14.30	14.5	11.65	11.87	11.43	12.5
2	3GPP Rel 6	HSUPA Subtest-4	14.44	14.57	14.70	15.0	11.76	11.95	11.98	12.5
0	3GPP Rel 6	HSUPA Subtest-5	15.38	15.19	15.50	16.0	12.90	13.11	13.00	13.5

<LTE Conducted Power>

General Note:

1. Anritsu MT8820C base station simulator was used to setup the connection with EUT; the frequency band, channel bandwidth, RB allocation configuration, modulation type are set in the base station simulator to configure EUT transmitting at maximum power and at different configurations which are requested to be reported to FCC, for conducted power measurement and SAR testing.
2. Per KDB 941225 D05v02r03, when a properly configured base station simulator is used for the SAR and power measurements, spectrum plots for each RB allocation and offset configuration is not required.
3. Per KDB 941225 D05v02r03, start with the largest channel bandwidth and measure SAR for QPSK with 1 RB allocation, using the RB offset and required test channel combination with the highest maximum output power for RB offsets at the upper edge, middle and lower edge of each required test channel.
4. Per KDB 941225 D05v02r03, 50% RB allocation for QPSK SAR testing follows 1RB QPSK allocation procedure.
5. Per KDB 941225 D05v02r03, For QPSK with 100% RB allocation, SAR is not required when the highest maximum output power for 100 % RB allocation is less than the highest maximum output power in 50% and 1 RB allocations and the highest reported SAR for 1 RB and 50% RB allocation are ≤ 0.8 W/kg. Otherwise, SAR is measured for the highest output power channel; and if the reported SAR is > 1.45 W/kg, the remaining required test channels must also be tested.
6. Per KDB 941225 D05v02r03, 16QAM output power for each RB allocation configuration is > not ½ dB higher than the same configuration in QPSK and the reported SAR for the QPSK configuration is ≤ 1.45 W/kg; Per KDB 941225 D05v02r03, 16QAM SAR testing is not required.
7. Per KDB 941225 D05v02r03, Smaller bandwidth output power for each RB allocation configuration is > not ½ dB higher than the same configuration in the largest supported bandwidth, and the reported SAR for the largest supported bandwidth is ≤ 1.45 W/kg; Per KDB 941225 D05v02r03, smaller bandwidth SAR testing is not required.
8. Tests were performed when EUT operating without power back-off and operating with power back-off in accordance with general note 3, 4, 5, 6, 7 as above.

Maximum Average RF Power (Proximity Sensor Inactive)
<LTE Band 17>

BW [MHz]	Modulation	RB Size	RB Offset	Power Low Ch. / Freq.	Power Middle Ch. / Freq.	Power High Ch. / Freq.	Tune up Limit (dBm)	MPR (dB)
Channel				23780	23790	23800		
Frequency (MHz)				709	710	711		
10	QPSK	1	0	22.29	22.10	22.31	22.5	0
10	QPSK	1	24	22.28	22.18	22.27		
10	QPSK	1	49	22.35	22.29	**22.39**		
10	QPSK	25	0	21.13	21.34	21.37	21.5	0-1
10	QPSK	25	12	21.21	21.25	21.39		
10	QPSK	25	24	21.29	21.38	21.40		
10	QPSK	50	0	21.25	21.30	21.32		
10	16QAM	1	0	20.87	21.11	20.85	21.5	0-1
10	16QAM	1	24	20.91	21.20	20.98		
10	16QAM	1	49	21.02	21.28	21.01		
10	16QAM	25	0	20.24	20.25	20.24	20.5	0-2
10	16QAM	25	12	20.21	20.27	20.39		
10	16QAM	25	24	20.31	20.32	20.24		
10	16QAM	50	0	20.18	20.28	20.23		
Channel				23755	23790	23825	Tune up Limit (dBm)	MPR (dB)
Frequency (MHz)				706.5	710	713.5		
5	QPSK	1	0	21.93	22.18	22.18	22.5	0
5	QPSK	1	12	22.30	22.09	22.31		
5	QPSK	1	24	22.27	22.25	22.28		
5	QPSK	12	0	21.15	21.33	21.30	21.5	0-1
5	QPSK	12	6	21.27	21.30	21.36		
5	QPSK	12	11	21.17	21.30	21.27		
5	QPSK	25	0	21.24	21.32	21.36		
5	16QAM	1	0	20.90	20.85	20.97	21.5	0-1
5	16QAM	1	12	21.14	20.92	21.02		
5	16QAM	1	24	20.94	21.13	20.98		
5	16QAM	12	0	20.16	20.26	20.27	20.5	0-2
5	16QAM	12	6	20.25	20.24	20.35		
5	16QAM	12	11	20.29	20.24	20.27		
5	16QAM	25	0	20.18	20.27	20.29		

<LTE Band 5>

BW [MHz]	Modulation	RB Size	RB Offset	Power Low Ch. / Freq.	Power Middle Ch. / Freq.	Power High Ch. / Freq.	Tune up Limit (dBm)	MPR (dB)
Channel				20450	20525	20600		
Frequency (MHz)				829	836.5	844		
10	QPSK	1	0	22.15	22.11	22.31	23.0	0
10	QPSK	1	24	22.12	22.19	22.36		
10	QPSK	1	49	22.29	22.33	**22.63**		
10	QPSK	25	0	21.16	21.14	21.29	22.0	0-1
10	QPSK	25	12	21.21	21.19	21.41		
10	QPSK	25	24	21.17	21.16	21.33		
10	QPSK	50	0	21.22	21.17	21.35		
10	16QAM	1	0	21.30	21.47	21.36	22.0	0-1
10	16QAM	1	24	21.03	21.41	21.49		
10	16QAM	1	49	21.37	21.54	21.72		
10	16QAM	25	0	20.21	20.22	20.36	21.0	0-2
10	16QAM	25	12	20.27	20.19	20.30		
10	16QAM	25	24	20.24	20.25	20.33		
10	16QAM	50	0	20.17	20.24	20.34		
Channel				20425	20525	20625	Tune up Limit (dBm)	MPR (dB)
Frequency (MHz)				826.5	836.5	846.5		
5	QPSK	1	0	22.06	22.01	22.25	23.0	0
5	QPSK	1	12	21.98	22.08	22.26		
5	QPSK	1	24	22.07	21.99	22.48		
5	QPSK	12	0	21.26	21.16	21.38	22.0	0-1
5	QPSK	12	6	21.19	21.21	21.41		
5	QPSK	12	11	21.25	21.23	21.49		
5	QPSK	25	0	21.16	21.12	21.53		
5	16QAM	1	0	21.14	21.05	21.25	22.0	0-1
5	16QAM	1	12	20.96	21.05	21.20		
5	16QAM	1	24	21.15	21.11	21.48		
5	16QAM	12	0	20.08	20.23	20.26	21.0	0-2
5	16QAM	12	6	20.13	20.30	20.50		
5	16QAM	12	11	20.09	20.23	20.53		
5	16QAM	25	0	20.18	20.15	20.52		

Channel				20415	20525	20635	Tune up Limit (dBm)	MPR (dB)
Frequency (MHz)				825.5	836.5	847.5		
3	QPSK	1	0	22.25	22.16	22.61	23.0	0
3	QPSK	1	7	22.06	22.15	22.48		
3	QPSK	1	14	22.12	22.09	22.45		
3	QPSK	8	0	21.23	21.25	21.37	22.0	0-1
3	QPSK	8	4	21.09	21.20	21.59		
3	QPSK	8	7	21.23	21.17	21.60		
3	QPSK	15	0	21.20	21.20	21.60		
3	16QAM	1	0	21.34	21.44	21.95	22.0	0-1
3	16QAM	1	7	21.22	21.38	21.66		
3	16QAM	1	14	21.32	21.25	21.50		
3	16QAM	8	0	20.20	20.22	20.37	21.0	0-2
3	16QAM	8	4	20.21	20.29	20.60		
3	16QAM	8	7	20.32	20.26	20.62		
3	16QAM	15	0	20.02	20.05	20.38		
Channel				20407	20525	20643	Tune up Limit (dBm)	Target MPR (dB)
Frequency (MHz)				824.7	836.5	848.3		
1.4	QPSK	1	0	22.23	22.11	22.50	23.0	0
1.4	QPSK	1	2	22.17	22.23	22.53		
1.4	QPSK	1	5	22.11	22.22	22.61		
1.4	QPSK	3	0	22.22	22.20	22.62		
1.4	QPSK	3	1	22.27	22.26	22.56		
1.4	QPSK	3	2	22.26	22.23	22.54		
1.4	QPSK	6	0	21.33	21.25	21.60	22.0	0-1
1.4	16QAM	1	0	21.10	21.10	21.43	22.0	0-1
1.4	16QAM	1	2	21.05	21.23	21.50		
1.4	16QAM	1	5	20.87	21.11	21.44		
1.4	16QAM	3	0	21.28	21.22	21.58		
1.4	16QAM	3	1	21.33	21.25	21.79		
1.4	16QAM	3	2	21.24	21.24	21.75		
1.4	16QAM	6	0	20.03	20.01	20.45	21.0	0-2

<LTE Band 4>

BW [MHz]	Modulation	RB Size	RB Offset	Power Low Ch. / Freq.	Power Middle Ch. / Freq.	Power High Ch. / Freq.	Tune up Limit (dBm)	MPR (dB)
Channel				20050	20175	20300		
Frequency (MHz)				1720	1732.5	1745		
20	QPSK	1	0	22.63	22.57	22.63	23.5	0
20	QPSK	1	49	22.76	22.77	22.75		
20	QPSK	1	99	22.57	22.40	22.56		
20	QPSK	50	0	21.74	21.71	21.74	22.5	0-1
20	QPSK	50	24	21.59	21.64	21.59		
20	QPSK	50	49	21.77	21.82	21.75		
20	QPSK	100	0	21.79	21.80	21.75		
20	16QAM	1	0	21.49	21.35	21.49	22.5	0-1
20	16QAM	1	49	21.50	21.62	21.50		
20	16QAM	1	99	21.37	21.37	21.33		
20	16QAM	50	0	20.59	20.60	20.59	21.5	0-2
20	16QAM	50	24	20.57	20.55	20.57		
20	16QAM	50	49	20.66	20.53	20.66		
20	16QAM	100	0	20.68	20.56	20.68		
Channel				20025	20175	20325	Tune up Limit (dBm)	MPR (dB)
Frequency (MHz)				1717.5	1732.5	1747.5		
15	QPSK	1	0	22.71	22.75	22.58	23.5	0
15	QPSK	1	37	22.72	22.62	22.63		
15	QPSK	1	74	22.63	22.57	22.70		
15	QPSK	36	0	21.72	21.73	21.59	22.5	0-1
15	QPSK	36	18	21.72	21.52	21.62		
15	QPSK	36	37	21.74	21.59	21.82		
15	QPSK	75	0	21.77	21.62	21.72		
15	16QAM	1	0	21.89	22.12	21.74	22.5	0-1
15	16QAM	1	37	21.87	21.70	21.82		
15	16QAM	1	74	21.84	21.66	21.91		
15	16QAM	36	0	20.70	20.58	20.56	21.5	0-2
15	16QAM	36	18	20.71	20.49	20.61		
15	16QAM	36	37	20.73	20.57	20.73		
15	16QAM	75	0	20.75	20.58	20.68		
Channel				20000	20175	20350	Tune up Limit (dBm)	MPR (dB)
Frequency (MHz)				1715	1732.5	1750		
10	QPSK	1	0	22.72	22.73	22.49	23.5	0
10	QPSK	1	24	22.73	22.53	22.52		
10	QPSK	1	49	22.70	22.64	22.67		
10	QPSK	25	0	21.79	21.58	21.64	22.5	0-1
10	QPSK	25	12	21.74	21.53	21.75		
10	QPSK	25	24	21.70	21.51	21.81		
10	QPSK	50	0	21.76	21.64	21.81		
10	16QAM	1	0	21.84	21.57	21.62	22.5	0-1
10	16QAM	1	24	21.79	21.45	21.59		
10	16QAM	1	49	21.79	21.44	21.73		
10	16QAM	25	0	20.69	20.47	20.60	21.5	0-2
10	16QAM	25	12	20.67	20.55	20.69		
10	16QAM	25	24	20.59	20.54	20.74		
10	16QAM	50	0	20.73	20.60	20.78		

Channel				19975	20175	20375	Tune up Limit (dBm)	MPR (dB)
Frequency (MHz)				1712.5	1732.5	1752.5		
5	QPSK	1	0	22.74	22.52	22.72	23.5	0
5	QPSK	1	12	22.75	22.50	22.70		
5	QPSK	1	24	22.72	22.50	22.73		
5	QPSK	12	0	21.77	21.57	21.86	22.5	0-1
5	QPSK	12	6	21.71	21.60	21.79		
5	QPSK	12	11	21.70	21.55	21.92		
5	QPSK	25	0	21.75	21.58	21.84		
5	16QAM	1	0	21.35	21.34	21.52	22.5	0-1
5	16QAM	1	12	21.28	21.25	21.44		
5	16QAM	1	24	21.34	21.07	21.42		
5	16QAM	12	0	20.77	20.53	20.85	21.5	0-2
5	16QAM	12	6	20.71	20.58	20.81		
5	16QAM	12	11	20.66	20.52	20.90		
5	16QAM	25	0	20.73	20.59	20.79		
Channel				19965	20175	20385	Tune up Limit (dBm)	MPR (dB)
Frequency (MHz)				1711.5	1732.5	1753.5		
3	QPSK	1	0	22.72	22.51	22.73	23.5	0
3	QPSK	1	7	22.65	22.50	22.74		
3	QPSK	1	14	22.73	22.49	22.72		
3	QPSK	8	0	21.77	21.59	21.86	22.5	0-1
3	QPSK	8	4	21.73	21.49	21.87		
3	QPSK	8	7	21.66	21.51	21.77		
3	QPSK	15	0	21.79	21.55	21.93		
3	16QAM	1	0	21.81	21.94	21.61	22.5	0-1
3	16QAM	1	7	21.75	21.80	21.60		
3	16QAM	1	14	21.70	21.29	21.63		
3	16QAM	8	0	20.79	20.56	20.85	21.5	0-2
3	16QAM	8	4	20.76	20.49	20.82		
3	16QAM	8	7	20.69	20.52	20.76		
3	16QAM	15	0	20.67	20.46	20.85		
Channel				19957	20175	20393	Tune up Limit (dBm)	MPR (dB)
Frequency (MHz)				1710.7	1732.5	1754.3		
1.4	QPSK	1	0	22.72	22.58	22.72	23.5	0
1.4	QPSK	1	2	22.74	22.62	22.74		
1.4	QPSK	1	5	22.73	22.61	22.73		
1.4	QPSK	3	0	22.70	22.63	22.72		
1.4	QPSK	3	1	22.72	22.55	22.70		
1.4	QPSK	3	2	22.71	22.56	22.73		
1.4	QPSK	6	0	21.74	21.64	21.86	22.5	0-1
1.4	16QAM	1	0	21.81	21.58	21.50	22.5	0-1
1.4	16QAM	1	2	21.61	21.57	21.59		
1.4	16QAM	1	5	21.65	21.44	21.70		
1.4	16QAM	3	0	21.73	21.65	21.81		
1.4	16QAM	3	1	21.68	21.59	21.85		
1.4	16QAM	3	2	21.69	21.51	21.80		
1.4	16QAM	6	0	20.70	20.46	20.63	21.5	0-2

<LTE Band 2>

BW [MHz]	Modulation	RB Size	RB Offset	Power Low Ch. / Freq.	Power Middle Ch. / Freq.	Power High Ch. / Freq.	Tune up Limit (dBm)	MPR (dB)
Channel				18700	18900	19100		
Frequency (MHz)				1860	1880	1900		
20	QPSK	1	0	22.08	21.82	22.40	23.0	0
20	QPSK	1	49	22.32	22.51	22.45		
20	QPSK	1	99	22.05	22.21	22.07		
20	QPSK	50	0	20.92	21.16	21.29	22.0	0-1
20	QPSK	50	24	20.97	21.25	21.28		
20	QPSK	50	49	21.00	21.33	21.30		
20	QPSK	100	0	20.92	21.20	21.15		
20	16QAM	1	0	20.68	20.85	21.27	22.0	0-1
20	16QAM	1	49	20.81	21.18	21.70		
20	16QAM	1	99	20.68	21.89	21.41		
20	16QAM	50	0	19.88	20.02	20.27	21.0	0-2
20	16QAM	50	24	19.89	20.10	20.14		
20	16QAM	50	49	19.80	20.17	19.97		
20	16QAM	100	0	19.80	20.03	20.07		
Channel				18675	18900	19125	Tune up Limit (dBm)	MPR (dB)
Frequency (MHz)				1857.5	1880	1902.5		
15	QPSK	1	0	21.96	22.24	22.44	23.0	0
15	QPSK	1	37	21.78	22.08	22.25		
15	QPSK	1	74	21.83	22.06	22.00		
15	QPSK	36	0	20.91	21.15	21.34	22.0	0-1
15	QPSK	36	18	21.02	21.21	21.18		
15	QPSK	36	37	20.85	21.32	20.89		
15	QPSK	75	0	21.03	21.06	21.24		
15	16QAM	1	0	20.85	20.98	21.24	22.0	0-1
15	16QAM	1	37	20.77	20.88	21.10		
15	16QAM	1	74	20.75	20.68	20.79		
15	16QAM	36	0	19.80	20.07	20.19	21.0	0-2
15	16QAM	36	18	19.91	20.11	20.15		
15	16QAM	36	37	19.75	20.22	19.88		
15	16QAM	75	0	19.93	19.98	20.16		
Channel				18650	18900	19150	Tune up Limit (dBm)	MPR (dB)
Frequency (MHz)				1855	1880	1905		
10	QPSK	1	0	22.24	22.32	22.24	23.0	0
10	QPSK	1	24	21.81	22.25	21.81		
10	QPSK	1	49	22.00	22.08	22.00		
10	QPSK	25	0	21.22	21.20	21.22	22.0	0-1
10	QPSK	25	12	21.11	21.17	21.11		
10	QPSK	25	24	20.95	21.20	20.95		
10	QPSK	50	0	21.05	21.14	21.05		
10	16QAM	1	0	20.91	20.91	20.91	22.0	0-1
10	16QAM	1	24	20.74	20.88	20.74		
10	16QAM	1	49	20.63	20.77	20.63		
10	16QAM	25	0	20.16	20.08	20.16	21.0	0-2
10	16QAM	25	12	19.89	20.17	19.89		
10	16QAM	25	24	19.94	20.09	19.94		
10	16QAM	50	0	19.98	19.99	19.98		

Channel				18625	18900	19175	Tune up Limit (dBm)	MPR (dB)
Frequency (MHz)				1852.5	1880	1907.5		
5	QPSK	1	0	22.11	22.23	22.11	23.0	0
5	QPSK	1	12	22.08	22.11	21.95		
5	QPSK	1	24	21.98	22.10	21.99		
5	QPSK	12	0	20.93	21.17	21.05	22.0	0-1
5	QPSK	12	6	20.97	21.14	20.87		
5	QPSK	12	11	20.94	21.18	20.80		
5	QPSK	25	0	20.95	21.12	20.90		
5	16QAM	1	0	21.10	21.44	21.20	22.0	0-1
5	16QAM	1	12	21.01	20.95	21.13		
5	16QAM	1	24	21.02	21.27	21.02		
5	16QAM	12	0	19.90	20.11	20.10	21.0	0-2
5	16QAM	12	6	19.84	20.18	19.91		
5	16QAM	12	11	19.92	20.11	19.85		
5	16QAM	25	0	20.03	20.11	19.89		
Channel				18615	18900	19185	Tune up Limit (dBm)	MPR (dB)
Frequency (MHz)				1851.5	1880	1908.5		
3	QPSK	1	0	22.05	22.31	22.10	23.0	0
3	QPSK	1	7	21.95	22.13	21.92		
3	QPSK	1	14	22.01	22.10	22.04		
3	QPSK	8	0	21.01	21.13	20.89	22.0	0-1
3	QPSK	8	4	20.98	21.20	21.19		
3	QPSK	8	7	21.03	21.18	20.97		
3	QPSK	15	0	20.98	21.14	21.15		
3	16QAM	1	0	20.68	20.97	20.63	22.0	0-1
3	16QAM	1	7	20.58	20.66	20.60		
3	16QAM	1	14	20.47	20.95	20.60		
3	16QAM	8	0	19.91	20.02	19.90	21.0	0-2
3	16QAM	8	4	19.89	20.08	19.78		
3	16QAM	8	7	19.84	20.06	20.07		
3	16QAM	15	0	19.86	19.96	20.11		
Channel				18607	18900	19193	Tune up Limit (dBm)	MPR (dB)
Frequency (MHz)				1850.7	1880	1909.3		
1.4	QPSK	1	0	22.11	22.34	21.94	23.0	0
1.4	QPSK	1	2	21.71	21.94	21.98		
1.4	QPSK	1	5	22.06	22.24	21.97		
1.4	QPSK	3	0	22.16	22.37	22.01		
1.4	QPSK	3	1	22.04	22.31	21.97		
1.4	QPSK	3	2	22.08	22.35	21.99		
1.4	QPSK	6	0	21.04	21.18	20.97	22.0	0-1
1.4	16QAM	1	0	21.06	20.85	20.83	22.0	0-1
1.4	16QAM	1	2	21.09	21.36	20.77		
1.4	16QAM	1	5	21.08	21.19	20.77		
1.4	16QAM	3	0	21.59	21.41	20.97		
1.4	16QAM	3	1	21.19	21.03	20.95		
1.4	16QAM	3	2	21.08	21.26	20.89		
1.4	16QAM	6	0	19.95	20.18	19.82	21.0	0-2

<LTE Band 7>

BW [MHz]	Modulation	RB Size	RB Offset	Power Low Ch. / Freq.	Power Middle Ch. / Freq.	Power High Ch. / Freq.	Tune up Limit (dBm)	MPR (dB)
Channel				20850	21100	21350		
Frequency (MHz)				2510	2535	2560		
20	QPSK	1	0	21.58	21.20	21.43	22.0	0
20	QPSK	1	49	21.64	21.47	**21.66**		
20	QPSK	1	99	21.20	21.19	21.40		
20	QPSK	50	0	20.26	20.20	20.18	21.0	0-1
20	QPSK	50	24	20.40	20.39	20.43		
20	QPSK	50	49	20.28	20.22	20.28		
20	QPSK	100	0	20.18	20.08	20.19		
20	16QAM	1	0	20.54	19.77	20.31	21.0	0-1
20	16QAM	1	49	20.60	20.42	20.38		
20	16QAM	1	99	20.20	20.00	20.02		
20	16QAM	50	0	19.47	19.30	19.20	20.0	0-2
20	16QAM	50	24	19.37	19.47	19.28		
20	16QAM	50	49	19.30	19.91	19.29		
20	16QAM	100	0	19.34	19.74	19.26		
Channel				20825	21100	21375	Tune up Limit (dBm)	MPR (dB)
Frequency (MHz)				2507.5	2535	2562.5		
15	QPSK	1	0	21.63	21.20	21.09	22.0	0
15	QPSK	1	37	21.38	21.21	21.05		
15	QPSK	1	74	21.36	21.25	21.32		
15	QPSK	36	0	20.66	20.14	20.26	21.0	0-1
15	QPSK	36	18	20.50	20.22	20.29		
15	QPSK	36	37	20.36	20.65	20.18		
15	QPSK	75	0	20.46	20.52	20.22		
15	16QAM	1	0	20.62	20.20	20.04	21.0	0-1
15	16QAM	1	37	20.24	20.26	20.03		
15	16QAM	1	74	20.52	20.29	20.23		
15	16QAM	36	0	19.41	19.26	19.29	20.0	0-2
15	16QAM	36	18	19.39	19.34	19.39		
15	16QAM	36	37	19.38	19.23	19.23		
15	16QAM	75	0	19.52	19.50	19.29		

Channel				20800	21100	21400	Tune up Limit (dBm)	MPR (dB)
Frequency (MHz)				2505	2535	2565		
10	QPSK	1	0	21.58	20.00	21.25	22.0	0
10	QPSK	1	24	21.41	20.07	21.24		
10	QPSK	1	49	21.30	20.66	20.89		
10	QPSK	25	0	20.55	19.11	20.25	21.0	0-1
10	QPSK	25	12	20.53	19.18	20.24		
10	QPSK	25	24	20.64	19.58	20.04		
10	QPSK	50	0	20.47	19.31	20.16		
10	16QAM	1	0	20.74	19.21	20.13	21.0	0-1
10	16QAM	1	24	20.31	19.02	20.08		
10	16QAM	1	49	20.24	19.83	19.62		
10	16QAM	25	0	19.58	18.39	19.36	20.0	0-2
10	16QAM	25	12	19.51	18.35	19.36		
10	16QAM	25	24	19.40	18.72	19.22		
10	16QAM	50	0	19.34	18.53	19.20		
Channel				20775	21100	21425	Tune up Limit (dBm)	MPR (dB)
Frequency (MHz)				2502.5	2535	2567.5		
5	QPSK	1	0	21.45	20.10	21.19	22.0	0
5	QPSK	1	12	21.59	20.08	21.09		
5	QPSK	1	24	21.34	20.52	20.86		
5	QPSK	12	0	20.40	19.15	20.12	21.0	0-1
5	QPSK	12	6	20.60	19.19	19.99		
5	QPSK	12	11	20.54	19.35	19.93		
5	QPSK	25	0	20.46	19.18	19.92		
5	16QAM	1	0	20.52	19.09	20.32	21.0	0-1
5	16QAM	1	12	20.65	19.34	20.25		
5	16QAM	1	24	20.51	19.73	19.86		
5	16QAM	12	0	19.55	18.33	19.17	20.0	0-2
5	16QAM	12	6	19.66	18.36	19.10		
5	16QAM	12	11	19.57	18.54	19.09		
5	16QAM	25	0	19.55	18.34	19.07		

Reduced Average RF Power (Proximity Sensor Active)
<LTE Band 17>

BW [MHz]	Modulation	RB Size	RB Offset	Power Low Ch. / Freq.	Power Middle Ch. / Freq.	Power High Ch. / Freq.	Tune up Limit (dBm)	MPR (dB)
Channel				23780	23790	23800		
Frequency (MHz)				709	710	711		
10	QPSK	1	0	15.08	15.05	15.19	16.0	0
10	QPSK	1	24	15.24	15.14	15.15		
10	QPSK	1	49	15.26	15.35	**15.39**		
10	QPSK	25	0	15.22	15.16	15.17	16.0	0-1
10	QPSK	25	12	15.25	15.28	15.30		
10	QPSK	25	24	15.21	15.23	15.21		
10	QPSK	50	0	15.22	15.18	15.23		
10	16QAM	1	0	14.78	14.74	14.81	15.5	0-1
10	16QAM	1	24	14.82	14.70	14.83		
10	16QAM	1	49	14.92	14.93	15.04		
10	16QAM	25	0	15.24	15.24	15.26	15.5	0-2
10	16QAM	25	12	15.22	15.23	15.28		
10	16QAM	25	24	15.25	15.30	15.28		
10	16QAM	50	0	15.12	15.23	15.29		
Channel				23755	23790	23825	Tune up Limit (dBm)	MPR (dB)
Frequency (MHz)				706.5	710	713.5		
5	QPSK	1	0	15.12	15.10	15.20	16.0	0
5	QPSK	1	12	15.20	15.22	15.31		
5	QPSK	1	24	15.25	15.34	15.33		
5	QPSK	12	0	15.06	15.30	15.26	16.0	0-1
5	QPSK	12	6	15.19	15.27	15.25		
5	QPSK	12	11	15.24	15.29	15.31		
5	QPSK	25	0	15.19	15.23	15.25		
5	16QAM	1	0	14.81	14.87	15.00	15.5	0-1
5	16QAM	1	12	15.07	15.03	15.08		
5	16QAM	1	24	14.94	15.02	15.01		
5	16QAM	12	0	15.10	15.31	15.32	15.5	0-2
5	16QAM	12	6	15.22	15.32	15.37		
5	16QAM	12	11	15.19	15.31	15.38		
5	16QAM	25	0	15.23	15.30	15.32		

<LTE Band 5>

BW [MHz]	Modulation	RB Size	RB Offset	Power Low Ch. / Freq.	Power Middle Ch. / Freq.	Power High Ch. / Freq.	Tune up Limit (dBm)	MPR (dB)
Channel				20450	20525	20600		
Frequency (MHz)				829	836.5	844		
10	QPSK	1	0	15.27	15.14	15.24	16.0	0
10	QPSK	1	24	15.28	15.12	15.21		
10	QPSK	1	49	15.34	15.26	**15.48**		
10	QPSK	25	0	15.07	14.98	15.22	16.0	0-1
10	QPSK	25	12	15.09	15.13	15.24		
10	QPSK	25	24	15.02	15.09	15.19		
10	QPSK	50	0	15.08	15.03	15.27		
10	16QAM	1	0	14.83	14.75	15.37	15.5	0-1
10	16QAM	1	24	14.90	14.93	15.32		
10	16QAM	1	49	14.86	15.14	15.33		
10	16QAM	25	0	15.11	15.24	15.35	15.5	0-2
10	16QAM	25	12	15.12	15.18	15.16		
10	16QAM	25	24	15.13	15.23	15.35		
10	16QAM	50	0	15.05	15.10	15.28		
Channel				20425	20525	20625	Tune up Limit (dBm)	MPR (dB)
Frequency (MHz)				826.5	836.5	846.5		
5	QPSK	1	0	15.04	14.93	15.10	16.0	0
5	QPSK	1	12	15.12	14.92	15.19		
5	QPSK	1	24	14.96	14.90	15.28		
5	QPSK	12	0	15.09	15.17	15.22	16.0	0-1
5	QPSK	12	6	14.98	15.13	15.23		
5	QPSK	12	11	15.02	15.04	15.20		
5	QPSK	25	0	15.05	15.13	15.27		
5	16QAM	1	0	14.99	14.96	15.14	15.5	0-1
5	16QAM	1	12	14.97	14.93	15.05		
5	16QAM	1	24	15.11	14.88	15.04		
5	16QAM	12	0	14.98	15.06	15.27	15.5	0-2
5	16QAM	12	6	14.94	15.05	15.22		
5	16QAM	12	11	14.99	15.05	15.27		
5	16QAM	25	0	15.03	15.10	15.30		

Channel				20415	20525	20635	Tune up Limit (dBm)	MPR (dB)
Frequency (MHz)				825.5	836.5	847.5		
3	QPSK	1	0	15.02	15.07	15.23	16.0	0
3	QPSK	1	7	14.89	15.02	15.31		
3	QPSK	1	14	14.70	14.96	15.36		
3	QPSK	8	0	14.50	15.08	15.27	16.0	0-1
3	QPSK	8	4	14.95	15.05	15.42		
3	QPSK	8	7	14.62	15.13	15.38		
3	QPSK	15	0	15.07	15.03	15.35		
3	16QAM	1	0	14.87	15.15	15.40	15.5	0-1
3	16QAM	1	7	14.90	15.24	15.44		
3	16QAM	1	14	14.83	15.18	15.37		
3	16QAM	8	0	15.12	15.09	15.34	15.5	0-2
3	16QAM	8	4	14.98	15.07	15.42		
3	16QAM	8	7	15.13	15.15	15.43		
3	16QAM	15	0	15.01	15.19	15.43		
Channel				20407	20525	20643	Tune up Limit (dBm)	Target MPR (dB)
Frequency (MHz)				824.7	836.5	848.3		
1.4	QPSK	1	0	15.11	15.10	15.33	16.0	0
1.4	QPSK	1	2	15.10	15.11	15.46		
1.4	QPSK	1	5	14.98	15.20	15.41		
1.4	QPSK	3	0	15.10	15.13	15.44		
1.4	QPSK	3	1	15.12	15.11	15.42		
1.4	QPSK	3	2	15.05	15.12	15.45		
1.4	QPSK	6	0	15.09	15.14	15.43	16.0	0-1
1.4	16QAM	1	0	15.20	15.10	15.28	15.5	0-1
1.4	16QAM	1	2	15.22	15.22	15.21		
1.4	16QAM	1	5	15.25	15.23	15.35		
1.4	16QAM	3	0	15.21	15.01	15.45		
1.4	16QAM	3	1	15.18	15.09	15.39		
1.4	16QAM	3	2	15.17	15.11	15.38		
1.4	16QAM	6	0	15.10	14.99	15.40	15.5	0-2

<LTE Band 4>

BW [MHz]	Modulation	RB Size	RB Offset	Power Low Ch. / Freq.	Power Middle Ch. / Freq.	Power High Ch. / Freq.	Tune up Limit (dBm)	MPR (dB)
Channel				20050	20175	20300		
Frequency (MHz)				1720	1732.5	1745		
20	QPSK	1	0	15.75	**15.82**	15.78	16.5	0
20	QPSK	1	49	15.59	15.47	15.53		
20	QPSK	1	99	15.45	15.42	15.62		
20	QPSK	50	0	15.55	15.60	15.54	16.5	0-1
20	QPSK	50	24	15.54	15.47	15.49		
20	QPSK	50	49	15.47	15.43	15.53		
20	QPSK	100	0	15.62	15.66	15.63		
20	16QAM	1	0	15.28	15.54	15.27	16.0	0-1
20	16QAM	1	49	15.28	15.17	15.12		
20	16QAM	1	99	15.21	15.25	15.31		
20	16QAM	50	0	15.63	15.52	15.64	16.0	0-2
20	16QAM	50	24	15.61	15.52	15.65		
20	16QAM	50	49	15.52	15.48	15.60		
20	16QAM	100	0	15.60	15.52	15.60		
Channel				20025	20175	20325	Tune up Limit (dBm)	MPR (dB)
Frequency (MHz)				1717.5	1732.5	1747.5		
15	QPSK	1	0	15.60	15.60	15.54	16.5	0
15	QPSK	1	37	15.64	15.43	15.48		
15	QPSK	1	74	15.50	15.38	15.63		
15	QPSK	36	0	15.58	15.58	15.51	16.5	0-1
15	QPSK	36	18	15.65	15.49	15.53		
15	QPSK	36	37	15.66	15.53	15.62		
15	QPSK	75	0	15.60	15.50	15.54		
15	16QAM	1	0	15.44	15.51	15.56	16.0	0-1
15	16QAM	1	37	15.56	15.38	15.65		
15	16QAM	1	74	15.29	15.18	15.64		
15	16QAM	36	0	15.61	15.63	15.51	16.0	0-2
15	16QAM	36	18	15.64	15.49	15.56		
15	16QAM	36	37	15.57	15.43	15.63		
15	16QAM	75	0	15.56	15.49	15.54		
Channel				20000	20175	20350	Tune up Limit (dBm)	MPR (dB)
Frequency (MHz)				1715	1732.5	1750		
10	QPSK	1	0	15.67	15.66	15.40	16.5	0
10	QPSK	1	24	15.65	15.50	15.57		
10	QPSK	1	49	15.64	15.54	15.57		
10	QPSK	25	0	15.61	15.46	15.62	16.5	0-1
10	QPSK	25	12	15.63	15.50	15.62		
10	QPSK	25	24	15.65	15.45	15.65		
10	QPSK	50	0	15.59	15.53	15.64		
10	16QAM	1	0	15.66	15.48	15.41	16.0	0-1
10	16QAM	1	24	15.65	15.45	15.39		
10	16QAM	1	49	15.64	15.49	15.63		
10	16QAM	25	0	15.61	15.46	15.58	16.0	0-2
10	16QAM	25	12	15.64	15.49	15.72		
10	16QAM	25	24	15.63	15.58	15.71		
10	16QAM	50	0	15.61	15.51	15.70		

Channel				19975	20175	20375	Tune up Limit (dBm)	MPR (dB)
Frequency (MHz)				1712.5	1732.5	1752.5		
5	QPSK	1	0	15.53	15.51	15.61	16.5	0
5	QPSK	1	12	15.60	15.43	15.67		
5	QPSK	1	24	15.48	15.40	15.63		
5	QPSK	12	0	15.64	15.50	15.76	16.5	0-1
5	QPSK	12	6	15.60	15.47	15.75		
5	QPSK	12	11	15.63	15.53	15.77		
5	QPSK	25	0	15.62	15.48	15.75		
5	16QAM	1	0	15.55	15.30	15.61	16.0	0-1
5	16QAM	1	12	15.49	15.37	15.76		
5	16QAM	1	24	15.55	15.50	15.75		
5	16QAM	12	0	15.66	15.57	15.74	16.0	0-2
5	16QAM	12	6	15.65	15.52	15.73		
5	16QAM	12	11	15.62	15.58	15.72		
5	16QAM	25	0	15.61	15.53	15.75		
Channel				19965	20175	20385	Tune up Limit (dBm)	MPR (dB)
Frequency (MHz)				1711.5	1732.5	1753.5		
3	QPSK	1	0	15.65	15.46	15.77	16.5	0
3	QPSK	1	7	15.60	15.47	15.69		
3	QPSK	1	14	15.64	15.47	15.67		
3	QPSK	8	0	15.63	15.44	15.74	16.5	0-1
3	QPSK	8	4	15.60	15.45	15.67		
3	QPSK	8	7	15.58	15.47	15.67		
3	QPSK	15	0	15.62	15.52	15.72		
3	16QAM	1	0	15.67	15.57	15.76	16.0	0-1
3	16QAM	1	7	15.65	15.59	15.75		
3	16QAM	1	14	15.66	15.66	15.73		
3	16QAM	8	0	15.65	15.53	15.72	16.0	0-2
3	16QAM	8	4	15.64	15.55	15.72		
3	16QAM	8	7	15.63	15.56	15.67		
3	16QAM	15	0	15.62	15.59	15.74		
Channel				19957	20175	20393	Tune up Limit (dBm)	MPR (dB)
Frequency (MHz)				1710.7	1732.5	1754.3		
1.4	QPSK	1	0	15.60	15.53	15.75	16.5	0
1.4	QPSK	1	2	15.59	15.51	15.74		
1.4	QPSK	1	5	15.66	15.47	15.69		
1.4	QPSK	3	0	15.66	15.58	15.73		
1.4	QPSK	3	1	15.65	15.54	15.72		
1.4	QPSK	3	2	15.64	15.54	15.72		
1.4	QPSK	6	0	15.67	15.48	15.73	16.5	0-1
1.4	16QAM	1	0	15.47	15.34	15.55	16.0	0-1
1.4	16QAM	1	2	15.39	15.17	15.47		
1.4	16QAM	1	5	15.37	15.16	15.52		
1.4	16QAM	3	0	15.65	15.45	15.49		
1.4	16QAM	3	1	15.64	15.31	15.49		
1.4	16QAM	3	2	15.66	15.44	15.52		
1.4	16QAM	6	0	15.60	15.32	15.70	16.0	0-2

<LTE Band 2>

BW [MHz]	Modulation	RB Size	RB Offset	Power Low Ch. / Freq.	Power Middle Ch. / Freq.	Power High Ch. / Freq.	Tune up Limit (dBm)	MPR (dB)
Channel				18700	18900	19100		
Frequency (MHz)				1860	1880	1900		
20	QPSK	1	0	15.02	15.43	15.42	16.0	0
20	QPSK	1	49	15.28	**15.58**	15.50		
20	QPSK	1	99	15.07	15.55	14.99		
20	QPSK	50	0	15.21	15.56	15.39	16.0	0-1
20	QPSK	50	24	15.12	15.47	15.20		
20	QPSK	50	49	15.10	15.55	14.99		
20	QPSK	100	0	15.08	15.48	15.20		
20	16QAM	1	0	14.63	15.14	15.22	16.0	0-1
20	16QAM	1	49	14.71	15.30	15.05		
20	16QAM	1	99	14.69	15.43	14.92		
20	16QAM	50	0	15.17	15.47	15.40	16.0	0-2
20	16QAM	50	24	15.18	15.49	15.23		
20	16QAM	50	49	15.08	15.45	15.13		
20	16QAM	100	0	15.10	15.40	15.21		
Channel				18675	18900	19125	Tune up Limit (dBm)	MPR (dB)
Frequency (MHz)				1857.5	1880	1902.5		
15	QPSK	1	0	14.98	15.53	15.45	16.0	0
15	QPSK	1	37	15.21	15.56	15.18		
15	QPSK	1	74	15.08	15.54	15.12		
15	QPSK	36	0	14.99	15.49	15.25	16.0	0-1
15	QPSK	36	18	15.15	15.52	15.17		
15	QPSK	36	37	15.00	15.55	15.02		
15	QPSK	75	0	15.09	15.55	15.13		
15	16QAM	1	0	15.11	15.51	15.43	16.0	0-1
15	16QAM	1	37	15.25	15.55	15.39		
15	16QAM	1	74	15.24	15.54	15.06		
15	16QAM	36	0	14.98	15.48	15.34	16.0	0-2
15	16QAM	36	18	15.11	15.51	15.20		
15	16QAM	36	37	15.07	15.50	15.04		
15	16QAM	75	0	15.14	15.39	15.17		
Channel				18650	18900	19150	Tune up Limit (dBm)	MPR (dB)
Frequency (MHz)				1855	1880	1905		
10	QPSK	1	0	14.88	15.25	15.12	16.0	0
10	QPSK	1	24	14.90	15.42	14.83		
10	QPSK	1	49	15.02	15.56	14.80		
10	QPSK	25	0	15.06	15.51	15.16	16.0	0-1
10	QPSK	25	12	15.02	15.56	14.94		
10	QPSK	25	24	15.07	15.57	14.82		
10	QPSK	50	0	15.00	15.51	14.92		
10	16QAM	1	0	14.79	15.29	15.13	16.0	0-1
10	16QAM	1	24	14.99	15.36	14.75		
10	16QAM	1	49	14.97	15.51	14.79		
10	16QAM	25	0	15.10	15.52	15.15	16.0	0-2
10	16QAM	25	12	15.05	15.54	15.07		
10	16QAM	25	24	15.09	15.50	14.90		
10	16QAM	50	0	15.01	15.47	15.09		

Channel				18625	18900	19175	Tune up Limit (dBm)	MPR (dB)
Frequency (MHz)				1852.5	1880	1907.5		
5	QPSK	1	0	15.02	15.45	14.86	16.0	0
5	QPSK	1	12	15.11	15.49	14.73		
5	QPSK	1	24	14.99	15.56	14.83		
5	QPSK	12	0	15.03	15.48	14.88	16.0	0-1
5	QPSK	12	6	15.06	15.45	14.78		
5	QPSK	12	11	15.02	15.47	14.76		
5	QPSK	25	0	15.04	15.43	14.82		
5	16QAM	1	0	15.09	15.50	15.04	16.0	0-1
5	16QAM	1	12	15.16	15.55	14.92		
5	16QAM	1	24	15.02	15.53	15.03		
5	16QAM	12	0	14.99	15.50	15.02	16.0	0-2
5	16QAM	12	6	15.03	15.52	14.92		
5	16QAM	12	11	15.07	15.46	14.91		
5	16QAM	25	0	15.04	15.47	14.80		
Channel				18615	18900	19185	Tune up Limit (dBm)	MPR (dB)
Frequency (MHz)				1851.5	1880	1908.5		
3	QPSK	1	0	14.99	15.44	14.77	16.0	0
3	QPSK	1	7	14.93	15.42	14.80		
3	QPSK	1	14	15.01	15.50	14.82		
3	QPSK	8	0	14.97	15.48	14.87	16.0	0-1
3	QPSK	8	4	15.04	15.45	14.77		
3	QPSK	8	7	14.99	15.51	14.80		
3	QPSK	15	0	14.96	15.49	14.83		
3	16QAM	1	0	14.78	15.21	14.40	16.0	0-1
3	16QAM	1	7	14.70	15.24	14.61		
3	16QAM	1	14	14.87	15.41	14.45		
3	16QAM	8	0	15.03	15.52	14.77	16.0	0-2
3	16QAM	8	4	15.04	15.56	14.78		
3	16QAM	8	7	15.05	15.53	14.87		
3	16QAM	15	0	15.06	15.47	14.76		
Channel				18607	18900	19193	Tune up Limit (dBm)	MPR (dB)
Frequency (MHz)				1850.7	1880	1909.3		
1.4	QPSK	1	0	15.01	15.51	14.84	16.0	0
1.4	QPSK	1	2	14.96	15.53	14.79		
1.4	QPSK	1	5	15.10	15.48	14.86		
1.4	QPSK	3	0	15.07	15.51	14.79		
1.4	QPSK	3	1	15.03	15.54	14.80		
1.4	QPSK	3	2	15.02	15.51	14.75		
1.4	QPSK	6	0	15.07	15.51	14.76	16.0	0-1
1.4	16QAM	1	0	14.47	15.09	14.30	16.0	0-1
1.4	16QAM	1	2	14.63	15.20	14.36		
1.4	16QAM	1	5	14.57	15.13	14.45		
1.4	16QAM	3	0	14.78	15.50	14.87		
1.4	16QAM	3	1	14.94	15.53	14.80		
1.4	16QAM	3	2	14.95	15.51	14.83		
1.4	16QAM	6	0	14.76	15.24	14.67	16.0	0-2

<LTE Band 7>

BW [MHz]	Modulation	RB Size	RB Offset	Power Low Ch. / Freq.	Power Middle Ch. / Freq.	Power High Ch. / Freq.	Tune up Limit (dBm)	MPR (dB)
Channel				20850	21100	21350		
Frequency (MHz)				2510	2535	2560		
20	QPSK	1	0	11.48	11.50	11.78	12.0	0
20	QPSK	1	49	11.53	11.76	**11.83**		
20	QPSK	1	99	10.83	11.40	11.75		
20	QPSK	50	0	11.24	11.19	11.55	12.0	0-1
20	QPSK	50	24	11.47	11.66	11.69		
20	QPSK	50	49	11.25	11.64	11.62		
20	QPSK	100	0	11.17	11.54	11.60		
20	16QAM	1	0	11.26	11.64	11.81	12.0	0-1
20	16QAM	1	49	11.48	11.43	11.80		
20	16QAM	1	99	11.26	11.46	11.80		
20	16QAM	50	0	11.21	11.42	11.35	12.0	0-2
20	16QAM	50	24	11.47	11.48	11.50		
20	16QAM	50	49	11.26	11.46	11.47		
20	16QAM	100	0	11.19	11.74	11.49		
Channel				20825	21100	21375	Tune up Limit (dBm)	MPR (dB)
Frequency (MHz)				2507.5	2535	2562.5		
15	QPSK	1	0	11.19	10.13	11.46	12.0	0
15	QPSK	1	37	11.47	10.19	11.37		
15	QPSK	1	74	11.43	10.36	11.76		
15	QPSK	36	0	11.41	10.54	11.44	12.0	0-1
15	QPSK	36	18	11.45	10.92	11.54		
15	QPSK	36	37	11.45	10.80	11.64		
15	QPSK	75	0	11.41	10.90	11.49		
15	16QAM	1	0	11.45	10.29	11.79	12.0	0-1
15	16QAM	1	37	11.41	10.80	11.78		
15	16QAM	1	74	11.44	11.05	11.82		
15	16QAM	36	0	11.32	10.04	11.48	12.0	0-2
15	16QAM	36	18	11.42	10.30	11.58		
15	16QAM	36	37	11.44	10.34	11.74		
15	16QAM	75	0	11.40	10.24	11.55		

Channel				20800	21100	21400	Tune up Limit (dBm)	MPR (dB)
Frequency (MHz)				2505	2535	2565		
10	QPSK	1	0	10.89	10.43	11.44	12.0	0
10	QPSK	1	24	11.43	10.70	11.79		
10	QPSK	1	49	11.44	10.83	11.78		
10	QPSK	25	0	11.23	10.54	11.57	12.0	0-1
10	QPSK	25	12	11.46	10.78	11.82		
10	QPSK	25	24	11.47	10.91	11.70		
10	QPSK	50	0	11.34	10.84	11.74		
10	16QAM	1	0	11.33	10.95	11.45	12.0	0-1
10	16QAM	1	24	11.40	11.40	11.81		
10	16QAM	1	49	11.46	11.33	11.78		
10	16QAM	25	0	11.18	10.81	11.51	12.0	0-2
10	16QAM	25	12	11.45	11.06	11.78		
10	16QAM	25	24	11.45	11.05	11.79		
10	16QAM	50	0	11.32	10.95	11.80		
Channel				20775	21100	21425	Tune up Limit (dBm)	MPR (dB)
Frequency (MHz)				2502.5	2535	2567.5		
5	QPSK	1	0	10.96	10.80	11.60	12.0	0
5	QPSK	1	12	10.96	10.85	11.07		
5	QPSK	1	24	11.33	11.14	11.45		
5	QPSK	12	0	10.98	10.74	11.31	12.0	0-1
5	QPSK	12	6	11.02	10.85	11.19		
5	QPSK	12	11	11.08	10.86	11.30		
5	QPSK	25	0	11.09	11.01	11.44		
5	16QAM	1	0	11.31	10.98	11.78	12.0	0-1
5	16QAM	1	12	11.43	11.06	11.65		
5	16QAM	1	24	11.49	11.26	11.80		
5	16QAM	12	0	10.96	10.65	11.58	12.0	0-2
5	16QAM	12	6	11.03	10.76	11.57		
5	16QAM	12	11	11.12	10.77	11.67		
5	16QAM	25	0	10.96	10.80	11.65		

LTE Carrier Aggregation Conducted Power

Note:

1. According to KDB941225 D05A v01, Uplink maximum output power measurement with downlink carrier aggregation active should be measured, using the highest output channel measured without downlink carrier aggregation, to confirm that uplink maximum output power with downlink carrier aggregation active remains within the specified tune-up tolerance limits and not more than ¼ dB higher than the maximum output measured without downlink carrier aggregation active.
2. Uplink maximum output power with downlink carrier aggregation active does not show more than ¼ dB higher than the maximum output power without downlink carrier aggregation active, therefore SAR evaluation with downlink carrier aggregation active can be excluded.

Maximum Average RF Power (Proximity Sensor Inactive)

LTE Band 2 with LTE Band17

Frequency (MHz)	Uplink Channel Number	BW(MHz)	RB Size	RB Offset	Mode	Without CA	With CA 2A+17A 5MHz+5MHz	With CA 2A+17A 5MHz+10MHz
						Average Power (dBm)	Average Power (dBm)	Average Power (dBm)
1852.5	18625	5	1	0	QPSK	22.11	22.08	22.13
1852.5	18625	5	1	12		22.08	22.15	22.12
1852.5	18625	5	1	24		21.98	22.01	22.05
1852.5	18625	5	1	0	16QAM	21.10	21.15	21.11
1852.5	18625	5	1	12		21.01	21.05	21.04
1852.5	18625	5	1	24		21.02	21.06	21.06
1880	18900	5	1	0	QPSK	22.23	22.26	22.23
1880	18900	5	1	12		22.11	22.15	22.14
1880	18900	5	1	24		22.10	22.15	22.14
1880	18900	5	1	0	16QAM	21.44	21.49	21.42
1880	18900	5	1	12		20.95	20.99	20.96
1880	18900	5	1	24		21.27	21.22	21.28
1907.5	19175	5	1	0	QPSK	22.11	22.08	22.07
1907.5	19175	5	1	12		21.95	21.92	21.90
1907.5	19175	5	1	24		21.99	21.96	21.90
1907.5	19175	5	1	0	16QAM	21.20	21.22	21.18
1907.5	19175	5	1	12		21.13	21.15	21.09
1907.5	19175	5	1	24		21.02	21.05	21.06

Frequency (MHz)	Uplink Channel Number	BW(MHz)	RB Size	RB Offset	Mode	Without CA	With CA 2A+17A 10MHz+5MHz	With CA 2A+17A 10MHz+10MHz
						Average Power (dBm)	Average Power (dBm)	Average Power (dBm)
1855	18650	10	1	0	QPSK	22.24	22.20	22.25
1855	18650	10	1	24		21.81	21.75	21.85
1855	18650	10	1	49		22.00	21.95	22.02
1855	18650	10	1	0	16QAM	20.91	20.88	20.92
1855	18650	10	1	24		20.74	20.70	20.79
1855	18650	10	1	49		20.63	20.65	20.69
1880	18900	10	1	0	QPSK	22.32	22.28	22.35
1880	18900	10	1	24		22.25	22.28	22.32
1880	18900	10	1	49		22.08	22.04	22.12
1880	18900	10	1	0	16QAM	20.91	20.88	20.95
1880	18900	10	1	24		20.88	20.91	20.92
1880	18900	10	1	49		20.77	20.82	20.85
1905	19150	10	1	0	QPSK	22.24	22.29	22.26
1905	19150	10	1	24		21.81	21.85	21.88
1905	19150	10	1	49		22.00	22.00	22.06
1905	19150	10	1	0	16QAM	20.91	20.92	20.98
1905	19150	10	1	24		20.74	20.79	20.81
1905	19150	10	1	49		20.63	20.69	20.65

LTE Band 4 with LTE Band17

Frequency (MHz)	Uplink Channel Number	BW(MHz)	RB Size	RB Offset	Mode	Without CA	With CA 4A+17A 5MHz+5MHz	With CA 4A+17A 5MHz+10MHz
						Average Power (dBm)	Average Power (dBm)	Average Power (dBm)
1712.5	19975	5	1	0	QPSK	22.74	22.69	22.78
1712.5	19975	5	1	12		22.75	22.78	22.75
1712.5	19975	5	1	24		22.72	22.72	22.78
1712.5	19975	5	1	0	16QAM	21.35	21.35	21.30
1712.5	19975	5	1	12		21.28	21.29	21.25
1712.5	19975	5	1	24		21.34	21.34	21.30
1732.5	20175	5	1	0	QPSK	22.52	22.55	22.50
1732.5	20175	5	1	12		22.50	22.48	22.45
1732.5	20175	5	1	24		22.50	22.42	22.45
1732.5	20175	5	1	0	16QAM	21.34	21.38	21.35
1732.5	20175	5	1	12		21.25	21.26	21.29
1732.5	20175	5	1	24		21.07	21.09	21.05
1752.5	20375	5	1	0	QPSK	22.72	22.78	22.75
1752.5	20375	5	1	12		22.70	22.76	22.73
1752.5	20375	5	1	24		22.73	22.78	22.70
1752.5	20375	5	1	0	16QAM	21.52	21.48	21.52
1752.5	20375	5	1	12		21.44	21.49	21.45
1752.5	20375	5	1	24		21.42	21.40	21.48

Frequency (MHz)	Uplink Channel Number	BW(MHz)	RB Size	RB Offset	Mode	Without CA	With CA 4A+17A 10MHz+5MHz	With CA 4A+17A 10MHz+10MHz
						Average Power (dBm)	Average Power (dBm)	Average Power (dBm)
1715	20000	10	1	0	QPSK	22.72	22.75	22.78
1715	20000	10	1	24		22.73	22.79	22.75
1715	20000	10	1	49		22.70	22.68	22.74
1715	20000	10	1	0	16QAM	21.84	21.84	21.88
1715	20000	10	1	24		21.79	21.78	21.82
1715	20000	10	1	49		21.79	21.83	21.85
1732.5	20175	10	1	0	QPSK	22.73	22.78	22.82
1732.5	20175	10	1	24		22.53	22.56	22.50
1732.5	20175	10	1	49		22.64	22.69	22.65
1732.5	20175	10	1	0	16QAM	21.57	21.59	21.55
1732.5	20175	10	1	24		21.45	21.48	21.48
1732.5	20175	10	1	49		21.44	21.49	21.40
1750	20350	10	1	0	QPSK	22.49	22.52	22.55
1750	20350	10	1	24		22.52	22.56	22.50
1750	20350	10	1	49		22.67	22.69	22.72
1750	20350	10	1	0	16QAM	21.62	21.67	21.60
1750	20350	10	1	24		21.59	21.55	21.52
1750	20350	10	1	49		21.73	21.69	21.70

LTE Band 17 with LTE Band 2

Frequency (MHz)	Uplink Channel Number	BW(MHz)	RB Size	RB Offset	Mode	Without CA	With CA 17A+2A 5MHz+5MHz	With CA 17A+2A 5MHz+10MHz
						Average Power (dBm)	Average Power (dBm)	Average Power (dBm)
706.5	23755	5	1	0	QPSK	21.93	21.88	21.96
706.5	23755	5	1	12		22.30	22.28	22.35
706.5	23755	5	1	24		22.27	22.25	22.32
706.5	23755	5	1	0	16QAM	20.90	20.83	20.96
706.5	23755	5	1	12		21.14	21.11	21.17
706.5	23755	5	1	24		20.94	20.88	20.93
710	23790	5	1	0	QPSK	22.18	22.12	22.21
710	23790	5	1	12		22.09	22.02	22.11
710	23790	5	1	24		22.25	22.20	22.20
710	23790	5	1	0	16QAM	20.85	20.92	20.85
710	23790	5	1	12		20.92	20.96	20.93
710	23790	5	1	24		21.13	21.05	21.15
713.5	23825	5	1	0	QPSK	22.18	22.11	22.11
713.5	23825	5	1	12		22.31	22.26	22.26
713.5	23825	5	1	24		22.28	22.24	22.26
713.5	23825	5	1	0	16QAM	20.97	20.96	20.90
713.5	23825	5	1	12		21.02	21.02	21.05
713.5	23825	5	1	24		20.98	20.91	20.92

Frequency (MHz)	Uplink Channel Number	BW(MHz)	RB Size	RB Offset	Mode	Without CA	With CA 17A+2A 10MHz+5MHz	With CA 17A+2A 10MHz+10MHz
						Average Power (dBm)	Average Power (dBm)	Average Power (dBm)
709	23780	10	1	0	QPSK	22.29	22.25	22.26
709	23780	10	1	24		22.28	22.31	22.28
709	23780	10	1	49		22.35	22.30	22.30
709	23780	10	1	0	16QAM	20.87	20.85	20.89
709	23780	10	1	24		20.91	20.93	20.91
709	23780	10	1	49		21.02	21.10	21.12
710	23790	10	1	0	QPSK	22.10	22.12	22.10
710	23790	10	1	24		22.18	22.20	22.25
710	23790	10	1	49		22.29	22.23	22.29
710	23790	10	1	0	16QAM	21.11	21.08	21.15
710	23790	10	1	24		21.20	21.25	21.22
710	23790	10	1	49		21.28	21.32	21.25
711	23800	10	1	0	QPSK	22.31	21.35	21.38
711	23800	10	1	24		22.27	22.25	22.20
711	23800	10	1	49		22.39	22.32	22.30
711	23800	10	1	0	16QAM	20.85	20.80	20.82
711	23800	10	1	24		20.98	20.95	20.89
711	23800	10	1	49		21.01	21.05	21.09

LTE Band 17 with LTE Band 4

Frequency (MHz)	Uplink Channel Number	BW(MHz)	RB Size	RB Offset	Mode	Without CA	With CA 17A+4A 5MHz+5MHz	With CA 17A+4A 5MHz+10MHz
						Average Power (dBm)	Average Power (dBm)	Average Power (dBm)
706.5	23755	5	1	0	QPSK	21.93	21.98	21.95
706.5	23755	5	1	12		22.30	22.35	22.32
706.5	23755	5	1	24		22.27	22.29	22.27
706.5	23755	5	1	0	16QAM	20.90	20.95	20.92
706.5	23755	5	1	12		21.14	21.16	21.19
706.5	23755	5	1	24		20.94	20.98	20.92
710	23790	5	1	0	QPSK	22.18	22.21	22.15
710	23790	5	1	12		22.09	22.12	22.15
710	23790	5	1	24		22.25	22.20	22.18
710	23790	5	1	0	16QAM	20.85	20.88	20.88
710	23790	5	1	12		20.92	20.95	20.89
710	23790	5	1	24		21.13	21.16	21.11
713.5	23825	5	1	0	QPSK	22.18	22.15	22.12
713.5	23825	5	1	12		22.31	22.26	22.28
713.5	23825	5	1	24		22.28	22.25	22.23
713.5	23825	5	1	0	16QAM	20.97	20.95	20.89
713.5	23825	5	1	12		21.02	21.00	20.92
713.5	23825	5	1	24		20.98	20.95	20.93

Frequency (MHz)	Uplink Channel Number	BW(MHz)	RB Size	RB Offset	Mode	Without CA	With CA 17A+4A 10MHz+5MHz	With CA 17A+4A 10MHz+10MHz
						Average Power (dBm)	Average Power (dBm)	Average Power (dBm)
709	23780	10	1	0	QPSK	22.29	22.25	22.32
709	23780	10	1	24		22.28	22.26	22.20
709	23780	10	1	49		22.35	22.30	22.33
709	23780	10	1	0	16QAM	20.87	20.86	20.82
709	23780	10	1	24		20.91	20.92	20.88
709	23780	10	1	49		21.02	20.96	20.99
710	23790	10	1	0	QPSK	22.10	22.15	22.12
710	23790	10	1	24		22.18	22.15	22.11
710	23790	10	1	49		22.29	22.28	22.28
710	23790	10	1	0	16QAM	21.11	21.08	21.05
710	23790	10	1	24		21.20	21.26	21.22
710	23790	10	1	49		21.28	21.25	21.23
711	23800	10	1	0	QPSK	22.31	21.35	21.32
711	23800	10	1	24		22.27	22.20	22.20
711	23800	10	1	49		22.39	22.36	22.35
711	23800	10	1	0	16QAM	20.85	20.89	20.86
711	23800	10	1	24		20.98	20.95	20.96
711	23800	10	1	49		21.01	21.06	21.03

Maximum Average RF Power (Proximity Sensor Active)

LTE Band 2 with LTE Band17

Frequency (MHz)	Uplink Channel Number	BW(MHz)	RB Size	RB Offset	Mode	Without CA	With CA 2A+17A 5MHz+5MHz	With CA 2A+17A 5MHz+10MHz
						Average Power (dBm)	Average Power (dBm)	Average Power (dBm)
1852.5	18625	5	1	0	QPSK	15.02	15.00	15.03
1852.5	18625	5	1	12		15.11	15.13	15.11
1852.5	18625	5	1	24		14.99	15.01	15.03
1852.5	18625	5	1	0	16QAM	15.09	15.05	15.08
1852.5	18625	5	1	12		15.16	15.11	15.15
1852.5	18625	5	1	24		15.02	15.05	15.03
1880	18900	5	1	0	QPSK	15.45	15.42	15.44
1880	18900	5	1	12		15.49	15.46	15.45
1880	18900	5	1	24		15.56	15.50	15.58
1880	18900	5	1	0	16QAM	15.50	15.52	15.53
1880	18900	5	1	12		15.55	15.55	15.58
1880	18900	5	1	24		15.53	15.52	15.54
1907.5	19175	5	1	0	QPSK	14.86	14.86	14.88
1907.5	19175	5	1	12		14.73	14.78	14.82
1907.5	19175	5	1	24		14.83	14.88	14.88
1907.5	19175	5	1	0	16QAM	15.04	15.00	15.02
1907.5	19175	5	1	12		14.92	14.95	14.98
1907.5	19175	5	1	24		15.03	15.03	15.09

Frequency (MHz)	Uplink Channel Number	BW(MHz)	RB Size	RB Offset	Mode	Without CA	With CA 2A+17A 10MHz+5MHz	With CA 2A+17A 10MHz+10MHz
						Average Power (dBm)	Average Power (dBm)	Average Power (dBm)
1855	18650	10	1	0	QPSK	14.88	14.92	14.89
1855	18650	10	1	24		14.90	14.95	14.92
1855	18650	10	1	49		15.02	15.08	15.05
1855	18650	10	1	0	16QAM	14.79	14.85	14.83
1855	18650	10	1	24		14.99	14.95	14.92
1855	18650	10	1	49		14.97	15.02	15.01
1880	18900	10	1	0	QPSK	15.25	15.22	15.23
1880	18900	10	1	24		15.42	15.38	15.39
1880	18900	10	1	49		15.56	15.55	15.58
1880	18900	10	1	0	16QAM	15.29	15.25	15.31
1880	18900	10	1	24		15.36	15.33	15.32
1880	18900	10	1	49		15.51	15.58	15.53
1905	19150	10	1	0	QPSK	15.12	15.18	15.15
1905	19150	10	1	24		14.83	14.80	14.82
1905	19150	10	1	49		14.80	14.78	14.78
1905	19150	10	1	0	16QAM	15.13	15.12	15.12
1905	19150	10	1	24		14.75	14.79	14.78
1905	19150	10	1	49		14.79	14.82	14.80

LTE Band 4 with LTE Band17

Frequency (MHz)	Uplink Channel Number	BW(MHz)	RB Size	RB Offset	Mode	Without CA	With CA 4A+17A 5MHz+5MHz	With CA 4A+17A 5MHz+10MHz
						Average Power (dBm)	Average Power (dBm)	Average Power (dBm)
1712.5	19975	5	1	0	QPSK	15.53	15.58	15.55
1712.5	19975	5	1	12		15.60	15.62	15.68
1712.5	19975	5	1	24		15.48	15.40	15.45
1712.5	19975	5	1	0	16QAM	15.55	15.59	15.56
1712.5	19975	5	1	12		15.49	15.40	15.42
1712.5	19975	5	1	24		15.55	15.56	15.50
1732.5	20175	5	1	0	QPSK	15.51	15.49	15.45
1732.5	20175	5	1	12		15.43	15.32	15.38
1732.5	20175	5	1	24		15.40	15.36	15.39
1732.5	20175	5	1	0	16QAM	15.30	15.26	15.25
1732.5	20175	5	1	12		15.37	15.29	15.39
1732.5	20175	5	1	24		15.50	15.44	15.52
1752.5	20375	5	1	0	QPSK	15.61	15.54	15.63
1752.5	20375	5	1	12		15.67	15.62	15.59
1752.5	20375	5	1	24		15.63	15.60	15.58
1752.5	20375	5	1	0	16QAM	15.61	15.56	15.63
1752.5	20375	5	1	12		15.76	15.77	15.85
1752.5	20375	5	1	24		15.75	15.79	15.83

Frequency (MHz)	Uplink Channel Number	BW(MHz)	RB Size	RB Offset	Mode	Without CA	With CA 4A+17A 10MHz+5MHz	With CA 4A+17A 10MHz+10MHz
						Average Power (dBm)	Average Power (dBm)	Average Power (dBm)
1715	20000	10	1	0	QPSK	15.67	15.72	15.66
1715	20000	10	1	24		15.65	15.59	15.60
1715	20000	10	1	49		15.64	15.66	15.69
1715	20000	10	1	0	16QAM	15.66	15.60	15.62
1715	20000	10	1	24		15.65	15.69	15.60
1715	20000	10	1	49		15.64	15.60	15.66
1732.5	20175	10	1	0	QPSK	15.66	15.65	15.62
1732.5	20175	10	1	24		15.50	15.52	15.54
1732.5	20175	10	1	49		15.54	15.58	15.62
1732.5	20175	10	1	0	16QAM	15.48	15.54	15.52
1732.5	20175	10	1	24		15.45	15.40	15.44
1732.5	20175	10	1	49		15.49	15.52	15.53
1750	20350	10	1	0	QPSK	15.40	15.38	15.45
1750	20350	10	1	24		15.57	15.59	15.62
1750	20350	10	1	49		15.57	15.62	15.65
1750	20350	10	1	0	16QAM	15.41	15.42	15.48
1750	20350	10	1	24		15.39	15.32	15.42
1750	20350	10	1	49		15.63	15.66	15.69

LTE Band 17 with LTE Band 2

Frequency (MHz)	Uplink Channel Number	BW(MHz)	RB Size	RB Offset	Mode	Without CA	With CA 17A+2A 5MHz+5MHz	With CA 17A+2A 5MHz+10MHz
						Average Power (dBm)	Average Power (dBm)	Average Power (dBm)
706.5	23755	5	1	0	QPSK	15.12	15.15	15.14
706.5	23755	5	1	12		15.20	15.22	15.21
706.5	23755	5	1	24		15.25	15.23	15.26
706.5	23755	5	1	0	16QAM	14.81	14.88	14.82
706.5	23755	5	1	12		15.07	15.05	15.06
706.5	23755	5	1	24		14.94	14.95	14.95
710	23790	5	1	0	QPSK	15.10	15.11	15.08
710	23790	5	1	12		15.22	15.23	15.18
710	23790	5	1	24		15.34	15.35	15.32
710	23790	5	1	0	16QAM	14.87	14.88	14.92
710	23790	5	1	12		15.03	15.05	15.04
710	23790	5	1	24		15.02	15.08	15.05
713.5	23825	5	1	0	QPSK	15.20	15.26	15.28
713.5	23825	5	1	12		15.31	15.32	15.35
713.5	23825	5	1	24		15.33	15.30	15.32
713.5	23825	5	1	0	16QAM	15.00	14.97	15.02
713.5	23825	5	1	12		15.08	15.06	15.02
713.5	23825	5	1	24		15.01	15.06	15.05

Frequency (MHz)	Uplink Channel Number	BW(MHz)	RB Size	RB Offset	Mode	Without CA	With CA 17A+2A 10MHz+5MHz	With CA 17A+2A 10MHz+10MHz
						Average Power (dBm)	Average Power (dBm)	Average Power (dBm)
709	23780	10	1	0	QPSK	15.08	15.02	15.00
709	23780	10	1	24		15.24	15.26	15.29
709	23780	10	1	49		15.26	15.22	15.31
709	23780	10	1	0	16QAM	14.78	14.77	14.82
709	23780	10	1	24		14.82	14.80	14.85
709	23780	10	1	49		14.92	14.90	14.88
710	23790	10	1	0	QPSK	15.05	15.03	15.08
710	23790	10	1	24		15.14	15.11	15.10
710	23790	10	1	49		15.35	15.33	15.32
710	23790	10	1	0	16QAM	14.74	14.72	14.75
710	23790	10	1	24		14.70	14.68	14.72
710	23790	10	1	49		14.93	14.92	14.96
711	23800	10	1	0	QPSK	15.19	15.15	15.18
711	23800	10	1	24		15.15	15.10	15.11
711	23800	10	1	49		15.39	15.32	15.33
711	23800	10	1	0	16QAM	14.81	14.78	14.82
711	23800	10	1	24		14.83	14.80	14.85
711	23800	10	1	49		15.04	15.00	15.02

LTE Band 17 with LTE Band 4

Frequency (MHz)	Uplink Channel Number	BW(MHz)	RB Size	RB Offset	Mode	Without CA	With CA 17A+4A 5MHz+5MHz	With CA 17A+4A 5MHz+10MHz
						Average Power (dBm)	Average Power (dBm)	Average Power (dBm)
706.5	23755	5	1	0	QPSK	15.12	15.12	15.08
706.5	23755	5	1	12		15.20	15.22	15.26
706.5	23755	5	1	24		15.25	15.32	15.30
706.5	23755	5	1	0	16QAM	14.81	14.89	14.82
706.5	23755	5	1	12		15.07	15.11	15.05
706.5	23755	5	1	24		14.94	14.99	14.92
710	23790	5	1	0	QPSK	15.10	15.12	15.18
710	23790	5	1	12		15.22	15.29	15.25
710	23790	5	1	24		15.34	15.38	15.35
710	23790	5	1	0	16QAM	14.87	14.92	14.88
710	23790	5	1	12		15.03	15.09	15.10
710	23790	5	1	24		15.02	14.98	15.05
713.5	23825	5	1	0	QPSK	15.20	15.26	15.32
713.5	23825	5	1	12		15.31	15.38	15.33
713.5	23825	5	1	24		15.33	15.39	15.35
713.5	23825	5	1	0	16QAM	15.00	15.05	15.02
713.5	23825	5	1	12		15.08	15.12	15.14
713.5	23825	5	1	24		15.01	15.06	15.08

Frequency (MHz)	Uplink Channel Number	BW(MHz)	RB Size	RB Offset	Mode	Without CA	With CA 17A+4A 10MHz+5MHz	With CA 17A+4A 10MHz+10MHz
						Average Power (dBm)	Average Power (dBm)	Average Power (dBm)
709	23780	10	1	0	QPSK	15.08	15.02	15.12
709	23780	10	1	24		15.24	15.20	15.19
709	23780	10	1	49		15.26	15.29	15.28
709	23780	10	1	0	16QAM	14.78	14.72	14.75
709	23780	10	1	24		14.82	14.85	14.89
709	23780	10	1	49		14.92	14.99	14.93
710	23790	10	1	0	QPSK	15.05	15.02	15.00
710	23790	10	1	24		15.14	15.11	15.12
710	23790	10	1	49		15.35	15.35	15.39
710	23790	10	1	0	16QAM	14.74	14.73	14.79
710	23790	10	1	24		14.70	14.76	14.79
710	23790	10	1	49		14.93	14.99	14.92
711	23800	10	1	0	QPSK	15.19	15.20	15.25
711	23800	10	1	24		15.15	15.14	15.19
711	23800	10	1	49		15.39	15.39	15.43
711	23800	10	1	0	16QAM	14.81	14.86	14.88
711	23800	10	1	24		14.83	14.80	14.89
711	23800	10	1	49		15.04	15.02	15.08

<WLAN Conducted Power>

General Note:

1. Per KDB 248227 D01v02r01, SAR test reduction is determined according to 802.11 transmission mode configurations and certain exposure conditions with multiple test positions. In the 2.4 GHz band, separate SAR procedures are applied to DSSS and OFDM configurations to simplify DSSS test requirements. For OFDM, in both 2.4 and 5 GHz bands, an initial test configuration must be determined for each standalone and aggregated frequency band, according to the transmission mode configuration with the highest maximum output power specified for production units to perform SAR measurements. If the same highest maximum output power applies to different combinations of channel bandwidths, modulations and data rates, additional procedures are applied to determine which test configurations require SAR measurement. When applicable, an initial test position may be applied to reduce the number of SAR measurements required for next to the ear, UMPC mini-tablet or hotspot mode configurations with multiple test positions.
2. For 2.4 GHz 802.11b DSSS, either the initial test position procedure for multiple exposure test positions or the DSSS procedure for fixed exposure position is applied; these are mutually exclusive. For 2.4 GHz and 5 GHz OFDM configurations, the initial test configuration is applied to measure SAR using either the initial test position procedure for multiple exposure test position configurations or the initial test configuration procedures for fixed exposure test conditions. Based on the reported SAR of the measured configurations and maximum output power of the transmission mode configurations that are not included in the initial test configuration, the subsequent test configuration and initial test position procedures are applied to determine if SAR measurements are required for the remaining OFDM transmission configurations. In general, the number of test channels that require SAR measurement is minimized based on maximum output power measured for the test sample(s).
3. For OFDM transmission configurations in the 2.4 GHz and 5 GHz bands, When the same maximum power is specified for multiple transmission modes in a frequency band, the largest channel bandwidth, lowest order modulation, lowest data rate and lowest order 802.11a/g/n/ac mode is used for SAR measurement, on the highest measured output power channel for each frequency band.
4. DSSS and OFDM configurations are considered separately according to the required SAR procedures. SAR is measured in the initial test position using the 802.11 transmission mode configuration required by the DSSS procedure or initial test configuration and subsequent test configuration(s) according to the OFDM procedures.18 The initial test position procedure is described in the following:
   a. When the reported SAR of the initial test position is ≤ 0.4 W/kg, further SAR measurement is not required for the other test positions in that exposure configuration and 802.11 transmission mode combinations within the frequency band or aggregated band.
   b. When the reported SAR of the test position is > 0.4 W/kg, SAR is repeated for the 802.11 transmission mode configuration tested in the initial test position to measure the subsequent next closet/smallest test separation distance and maximum coupling test position on the highest maximum output power channel, until the report SAR is ≤ 0.8 W/kg or all required test position are tested.
   c. For all positions/configurations, when the reported SAR is > 0.8 W/kg, SAR is measured for these test positions/configurations on the subsequent next highest measured output power channel(s) until the reported SAR is ≤ 1.2 W/kg or all required channels are tested.

<WLAN 2.4GHz>

	Mode	Channel	Frequency (MHz)	Data Rate	Average power (dBm)	Duty cycle
2.4GHz WLAN	802.11b	CH 01	2412	1Mbps	**14.08**	97.87%
		CH 06	2437		13.90	
		CH 11	2462		13.20	
	802.11g	CH 01	2412	6Mbps	**13.82**	87.47%
		CH 06	2437		13.35	
		CH 11	2462		12.78	
	802.11n-HT20	CH 01	2412	MCS0	**12.78**	86.62%
		CH 06	2437		12.74	
		CH 11	2462		11.78	

<WLAN 5GHz>

	Mode	Channel	Frequency (MHz)	Data Rate	Average power (dBm)	Duty cycle
5GHz WLAN	802.11a	CH 36	5180	6Mbps	9.13	87.13%
		CH 40	5200		8.42	
		CH 44	5220		8.95	
		CH 48	5240		**9.16**	
		CH 52	5260		9.01	87.13%
		CH 56	5280		8.34	
		CH 60	5300		**9.06**	
		CH 64	5320		8.95	
		CH 100	5500		9.76	87.13%
		CH 104	5520		9.17	
		CH 108	5540		9.38	
		CH 112	5560		9.53	
		CH 116	5580		10.64	
		CH 132	5660		11.50	
		CH 136	5680		**11.71**	
		CH 140	5700		9.35	
	802.11n-HT20	CH 36	5180	MCS0	**9.19**	85.95%
		CH 40	5200		8.48	
		CH 44	5220		9.08	
		CH 48	5240		9.08	
		CH 52	5260		**9.06**	85.95%
		CH 56	5280		8.28	
		CH 60	5300		8.91	
		CH 64	5320		8.89	
		CH 100	5500		9.64	85.95%
		CH 104	5520		9.20	
		CH 108	5540		9.41	
		CH 112	5560		9.53	
		CH 116	5580		10.64	
		CH 132	5660		11.52	
		CH 136	5680		**11.75**	
		CH 140	5700		9.35	
	802.11n-HT40	CH 38	5190	MCS0	10.18	75.71%
		CH 46	5230		**11.05**	
		CH 54	5270		**10.86**	75.71%
		CH 62	5310		10.55	
		CH 102	5510		9.53	75.71%
		CH 110	5550		10.52	
		CH 134	5670		**11.53**	

14. Bluetooth Exclusions Applied

Mode Band	Average power(dBm)	
	Bluetooth v3.0+EDR	Bluetooth v4.0 LE
2.4GHz Bluetooth	3.5	-0.5

Note:

1. Per KDB 447498 D01v05r02, the 1-g and 10-g SAR test exclusion thresholds for 100 MHz to 6 GHz at *test separation distances* ≤ 50 mm are determined by:
   [(*max. power of channel, including tune-up tolerance, mW*)/(*min. test separation distance, mm*)] ·[$\sqrt{f(GHz)}$] ≤ 3.0 for 1-g SAR and ≤ 7.5 for 10-g extremity SAR
   - f(GHz) is the RF channel transmit frequency in GHz
   - Power and distance are rounded to the nearest mW and mm before calculation
   - The result is rounded to one decimal place for comparison

Bluetooth Max Power (dBm)	Separation Distance (mm)	Frequency (GHz)	Exclusion Thresholds
3.5	0	2.48	0.6

Note:
Per KDB 447498 D01v05r02, when the minimum test separation distance is < 5 mm, a distance of 5 mm is applied to determine SAR test exclusion. The test exclusion threshold is 0.6 which is <= 3, SAR testing is not required.

15. Antenna Location

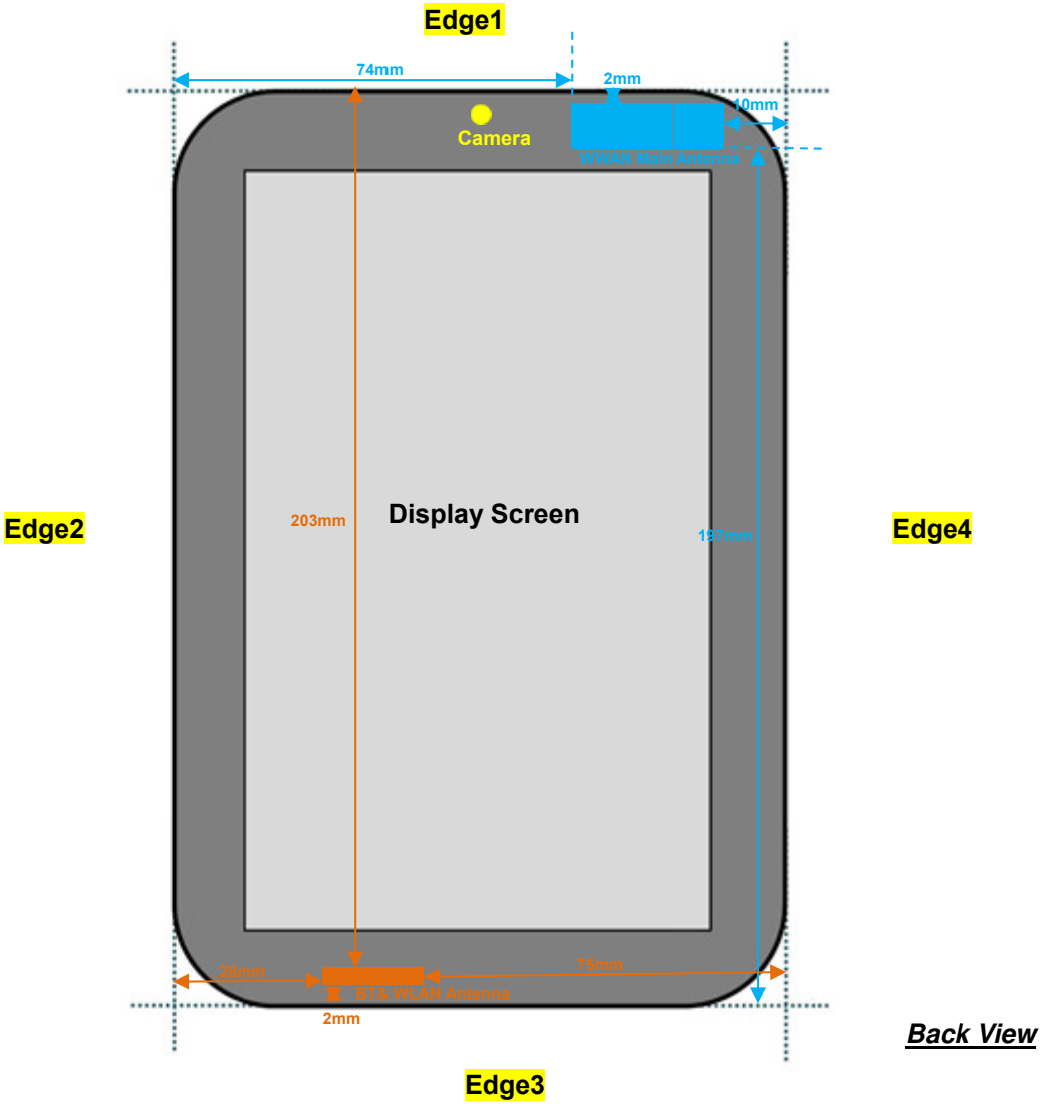

Diagonal Dimension : 235mm

General Note:

1. The below table, when the distance is < 50 mm exclusion threshold is "Ratio", when the distance is > 50 mm exclusion threshold is "mW"
2. Maximum power is the source-based time-average power and represents the maximum RF output power among production units
3. Per KDB 447498 D01v05r02, for larger devices, the test separation distance of adjacent edge configuration is determined by the closest separation between the antenna and the user.
4. Per KDB 447498 D01v05r02, standalone SAR test exclusion threshold is applied; If the test separation distance is < 5mm, 5mm is used to determine SAR exclusion threshold.
5. Per KDB 447498 D01v05r02, the 1-g and 10-g SAR test exclusion thresholds for 100 MHz to 6 GHz at *test separation distances* ≤ 50 mm are determined by:
   [(*max. power of channel, including tune-up tolerance, mW*)/(*min. test separation distance, mm*)] ·[$\sqrt{f(GHz)}$] ≤ 3.0 for 1-g SAR and ≤ 7.5 for 10-g extremity SAR
   - f(GHz) is the RF channel transmit frequency in GHz
   - Power and distance are rounded to the nearest mW and mm before calculation
   - The result is rounded to one decimal place for comparison
6. Per KDB 447498 D01v05r02, at 100 MHz to 6 GHz and for *test separation distances* > 50 mm, the SAR test exclusion threshold is determined according to the following
   a) [Threshold at 50 mm in step 1) + (test separation distance - 50 mm)·(f(MHz)/150)] mW, at 100 MHz to 1500 MHz
   b) [Threshold at 50 mm in step 1) + (test separation distance - 50 mm)·10] mW at > 1500 MHz and ≤ 6 GHz

SAR test exclusion table distance is ≤ 50mm

Exposure Position	Wireless Interface	WCDMA Band V	WCDMA Band II	LTE Band 17	LTE Band 5	LTE Band 4	LTE Band 2	LTE Band 7	WLAN 2.4GHz 802.11b	WLAN 5.2GHz 802.11a	WLAN 5.3GHz 802.11a	WLAN 5.5GHz 802.11a
	Calculated Frequency (MHz)	846.6	1907.6	713.5	848.3	1754.3	1909.3	2567.5	2462	5240	5320	5700
	Tune-up Maximum power (dBm)	25.0	25.0	22.5	23.0	23.5	23.0	22.0	14.5	9.5	9.5	12.0
Bottom Face	Antenna to user (mm)	0							0			
	SAR exclusion threshold	58	87	30	37	59	55	51	9	4	4	8
	SAR testing required?	**Yes**	**Yes**	**Yes**	**Yes**	**Yes**	**Yes**	**Yes**	**Yes**	**Yes**	**Yes**	**Yes**
Edge 1	Antenna to user (mm)	2										
	SAR exclusion threshold	58	87	30	37	59	55	51				
	SAR testing required?	**Yes**	**Yes**	**Yes**	**Yes**	**Yes**	**Yes**	**Yes**				
Edge 2	Antenna to user (mm)								28			
	SAR exclusion threshold								2	1	1	1
	SAR testing required?								**No**	**No**	**No**	**No**
Edge 3	Antenna to user (mm)								2			
	SAR exclusion threshold								9	4	4	8
	SAR testing required?								**Yes**	**Yes**	**Yes**	**Yes**
Edge 4	Antenna to user (mm)	10										
	SAR exclusion threshold	29	44	15	18	30	28	25				
	SAR testing required?	**Yes**	**Yes**	**Yes**	**Yes**	**Yes**	**Yes**	**Yes**				

SAR test exclusion table distance is > 50mm

Exposure Position	Wireless Interface	WCDMA Band V	WCDMA Band II	LTE Band 17	LTE Band 5	LTE Band 4	LTE Band 2	LTE Band 7	WLAN 2.4GHz 802.11b	WLAN 5.2GHz 802.11a	WLAN 5.3GHz 802.11a	WLAN 5.5GHz 802.11a
	Calculated Frequency (MHz)	846.6	1907.6	713.5	848.3	1754.3	1909.3	2567.5	2462	5240	5320	5700
	Tune-up Maximum power (dBm)	25.0	25.0	22.5	23.0	23.5	23.0	22.0	14.5	9.5	9.5	12.0
	Tune-up Maximum rated power (mW)	316	316	178	200	224	200	158	28	8.9	8.9	15.8
Edge 1	Antenna to user (mm)								203			
	SAR exclusion threshold (mW)								1626	1596	1595	1593
	SAR testing required?								No	No	No	No
Edge 2	Antenna to user (mm)	74										
	SAR exclusion threshold (mW)	298	349	292	299	353	349	334				
	SAR testing required?	**Yes**	No	No	No	No	No	No				
Edge 3	Antenna to user (mm)	197										
	SAR exclusion threshold (mW)	992	1579	876	994	1583	1579	1564				
	SAR testing required?	No	No	No	No	No	No	No				
Edge 4	Antenna to user (mm)								75			
	SAR exclusion threshold (mW)								346	316	315	313
	SAR testing required?								No	No	No	No

16. SAR Test Results

General Note:

1. Per KDB 447498 D01v05r02, the reported SAR is the measured SAR value adjusted for maximum tune-up tolerance.
   a. Tune-up scaling Factor = tune-up limit power (mW) / EUT RF power (mW), where tune-up limit is the maximum rated power among all production units.
   b. For SAR testing of WLAN signal with non-100% duty cycle, the measured SAR is scaled-up by the duty cycle scaling factor which is equal to "1/(duty cycle)"
   c. For WWAN: Reported SAR(W/kg)= Measured SAR(W/kg)*Tune-up Scaling Factor
   d. For WLAN: Reported SAR(W/kg)= Measured SAR(W/kg)* Duty Cycle scaling factor * Tune-up scaling factor
2. Per KDB 447498 D01v05r02, for each exposure position, testing of other required channels within the operating mode of a frequency band is not required when the *reported* 1-g or 10-g SAR for the mid-band or highest output power channel is:
   - ≤ 0.8 W/kg or 2.0 W/kg, for 1-g or 10-g respectively, when the transmission band is ≤ 100 MHz
   - ≤ 0.6 W/kg or 1.5 W/kg, for 1-g or 10-g respectively, when the transmission band is between 100 MHz and 200 MHz
   - ≤ 0.4 W/kg or 1.0 W/kg, for 1-g or 10-g respectively, when the transmission band is ≥ 200 MHz
3. Per KDB 941225 D01v03, SAR for Body exposure is measured using a 12.2 kbps RMC with TPC bits configured to all “1’s”.
4. Per KDB 941225 D01v03, RMC 12.2kbps setting is used to evaluate SAR when EUT operating without power back-off and operating with power back-off. If the maximum output power and tune-up tolerance specified for production units in HSDPA / HSUPA is ≤ ¼ dB higher than RMC 12.2Kbps or when the highest reported SAR of the RMC12.2Kbps is scaled by the ratio of specified maximum output power and tune-up tolerance of HSDPA / HSUPA to RMC12.2Kbps and the adjusted SAR is ≤ 1.2 W/kg, SAR measurement is not required for HSDPA / HSUPA.
5. Anritsu MT8820C base station simulator was used to setup the connection with EUT; the frequency band, channel bandwidth, RB allocation configuration, modulation type are set in the base station simulator to configure EUT transmitting at maximum power and at different configurations which are requested to be reported to FCC, for conducted power measurement and SAR testing.
6. Per KDB 941225 D05v02r03, when a properly configured base station simulator is used for the SAR and power measurements, spectrum plots for each RB allocation and offset configuration is not required.
7. Per KDB 941225 D05v02r03, start with the largest channel bandwidth and measure SAR for QPSK with 1 RB allocation, using the RB offset and required test channel combination with the highest maximum output power for RB offsets at the upper edge, middle and lower edge of each required test channel.
8. Per KDB 941225 D05v02r03, 50% RB allocation for QPSK SAR testing follows 1RB QPSK allocation procedure.
9. Per KDB 941225 D05v02r03, For QPSK with 100% RB allocation, SAR is not required when the highest maximum output power for 100 % RB allocation is less than the highest maximum output power in 50% and 1 RB allocations and the highest reported SAR for 1 RB and 50% RB allocation are ≤ 0.8 W/kg. Otherwise, SAR is measured for the highest output power channel; and if the reported SAR is > 1.45 W/kg, the remaining required test channels must also be tested.
10. Per KDB 941225 D05v02r03, 16QAM output power for each RB allocation configuration is > not ½ dB higher than the same configuration in QPSK and the reported SAR for the QPSK configuration is ≤ 1.45 W/kg; Per KDB 941225 D05v02r03, 16QAM SAR testing is not required.
11. Per KDB 941225 D05v02r03, smaller bandwidth output power for each RB allocation configuration is > not ½ dB higher than the same configuration in the largest supported bandwidth, and the reported SAR for the largest supported bandwidth is ≤ 1.45 W/kg; Per KDB 941225 D05v02r03, smaller bandwidth SAR testing is not required.
12. This device 2.4GHz WLAN supports hotspot operation, and 2.4GHz WLAN supports WiFi Direct (Group Client / Group Owner), and 5.2GHz / 5.3GHz / 5.5GHz supports WiFi Direct (Group Client only).
13. Per KDB 248227 D01v02r01, for 2.4GHz 802.11g/n SAR testing is not required when the highest reported SAR for DSSS is adjusted by the ratio of OFDM to DSSS specified maximum output power and the adjusted SAR is ≤ 1.2 W/kg.
14. Per KDB 248227 D01v02r01, for U-NII-1 Head and Body-worn SAR testing is not required when the U-NII-2A band highest reported SAR for a test configuration is ≤ 1.2 W/kg, SAR is not required for U-NII-1 band.
15. When the reported SAR of the test position is > 0.4 W/kg, SAR is repeated for the 802.11 transmission mode configuration tested in the initial test position to measure the subsequent next closet/smallest test separation distance and maximum coupling test position on the highest maximum output power channel, until the report SAR is ≤ 0.8 W/kg or all required test position are tested.
16. For all positions / configurations, when the reported SAR is > 0.8 W/kg, SAR is measured for these test positions / configurations on the subsequent next highest measured output power channel(s) until the reported SAR is ≤ 1.2 W/kg or all

required channels are tested.

17. For the exposure positions that proximity sensor power reduction is applied for SAR compliance, additional SAR testing with EUT transmitting full power in normal mode was performed; 1.7cm for bottom face and edge1
18. Curved region diagram of the device according to the test setup photo (exterior radius dimension), for WWAN, X=3.4mm, Y=1.21mm, Z=1.82mm, X>Z, Y<Z; for BT&WLAN, X=3.32mm, Y=1.5mm, Z=1.71mm, X>Z, Y<Z, Per KDB 616217 D04v01r01, curved SAR evaluation can be excluded. More detail information please refer to the setup photo.

16.1 Body SAR

<WCDMA SAR>

Plot No.	Band	Mode	Test Position	Gap (cm)	Power Back-off	Ch.	Freq. (MHz)	Average Power (dBm)	Tune-Up Limit (dBm)	Tune-up Scaling Factor	Power Drift (dB)	Measured 1g SAR (W/kg)	Reported 1g SAR (W/kg)
	WCDMA Band V	RMC 12.2Kbps	Bottom Face	0	On	4132	826.4	16.59	17.00	1.099	0.19	0.315	0.346
	WCDMA Band V	RMC 12.2Kbps	Edge 1	0	On	4132	826.4	16.59	17.00	1.099	0.09	0.224	0.246
	WCDMA Band V	RMC 12.2Kbps	Bottom Face	1.7	Off	4132	826.4	24.60	25.00	1.096	-0.05	0.347	0.380
	WCDMA Band V	RMC 12.2Kbps	Edge 1	1.7	Off	4132	826.4	24.60	25.00	1.096	-0.08	0.279	0.306
	WCDMA Band V	RMC 12.2Kbps	Edge 2	0	Off	4132	826.4	24.60	25.00	1.096	-0.05	0.147	0.161
#01	WCDMA Band V	RMC 12.2Kbps	Edge 4	0	Off	4132	826.4	24.60	25.00	1.096	-0.08	0.853	**0.935**
	WCDMA Band V	RMC 12.2Kbps	Edge 4	0	Off	4182	836.4	24.47	25.00	1.130	0.11	0.796	0.899
	WCDMA Band V	RMC 12.2Kbps	Edge 4	0	Off	4233	846.6	24.55	25.00	1.109	0.12	0.749	0.831
	WCDMA Band II	RMC 12.2Kbps	Bottom Face	0	On	9400	1880	13.94	14.50	1.138	0.01	0.878	0.999
	WCDMA Band II	RMC 12.2Kbps	Edge 1	0	On	9400	1880	13.94	14.50	1.138	-0.13	0.575	0.654
	WCDMA Band II	RMC 12.2Kbps	Bottom Face	0	On	9262	1852.4	13.72	14.50	1.197	-0.02	0.792	0.948
	WCDMA Band II	RMC 12.2Kbps	Bottom Face	0	On	9538	1907.6	13.75	14.50	1.189	-0.08	0.811	0.964
	WCDMA Band II	RMC 12.2Kbps	Bottom Face	1.7	Off	9400	1880	24.36	25.00	1.159	-0.08	0.505	0.585
	WCDMA Band II	RMC 12.2Kbps	Edge 1	1.7	Off	9400	1880	24.36	25.00	1.159	-0.06	0.395	0.458
	WCDMA Band II	RMC 12.2Kbps	Edge 4	0	Off	9400	1880	24.36	25.00	1.159	-0.19	0.883	1.023
#02	WCDMA Band II	RMC 12.2Kbps	Edge 4	0	Off	9262	1852.4	24.12	25.00	1.225	-0.08	0.947	**1.160**
	WCDMA Band II	RMC 12.2Kbps	Edge 4	0	Off	9538	1907.6	24.34	25.00	1.164	-0.14	0.809	0.942

<LTE SAR>

Plot No.	Band	BW (MHz)	RB Size	RB Offset	Mode	Test Position	Gap (cm)	Power Back-off	Ch.	Freq. (MHz)	Average Power (dBm)	Tune-Up Limit (dBm)	Tune-up Scaling Factor	Power Drift (dB)	Measured 1g SAR (W/kg)	Reported 1g SAR (W/kg)
	LTE Band 17	10M	1	49	QPSK	Bottom Face	0	On	23800	711	15.39	16.00	1.151	-0.02	0.405	0.466
#03	LTE Band 17	10M	25	12	QPSK	Bottom Face	0	On	23800	711	15.30	16.00	1.175	-0.03	0.402	**0.472**
	LTE Band 17	10M	1	49	QPSK	Edge 1	0	On	23800	711	15.39	16.00	1.151	0.04	0.217	0.250
	LTE Band 17	10M	25	12	QPSK	Edge 1	0	On	23800	711	15.30	16.00	1.175	0.18	0.219	0.257
	LTE Band 17	10M	1	49	QPSK	Bottom Face	1.7	Off	23800	711	22.39	22.50	1.026	0.14	0.161	0.165
	LTE Band 17	10M	25	24	QPSK	Bottom Face	1.7	Off	23800	711	21.40	21.50	1.023	0.03	0.124	0.127
	LTE Band 17	10M	1	49	QPSK	Edge 1	1.7	Off	23800	711	22.39	22.50	1.026	0.04	0.113	0.116
	LTE Band 17	10M	25	24	QPSK	Edge 1	1.7	Off	23800	711	21.40	21.50	1.023	0.01	0.086	0.088
	LTE Band 17	10M	1	49	QPSK	Edge 4	0	Off	23800	711	22.39	22.50	1.026	0.09	0.238	0.244
	LTE Band 17	10M	25	24	QPSK	Edge 4	0	Off	23800	711	21.40	21.50	1.023	0.11	0.188	0.192
	LTE Band 5	10M	1	49	QPSK	Bottom Face	0	On	20600	844	15.48	16.00	1.127	0.14	0.233	0.263
	LTE Band 5	10M	25	12	QPSK	Bottom Face	0	On	20600	844	15.24	16.00	1.191	-0.03	0.224	0.267
	LTE Band 5	10M	1	49	QPSK	Edge 1	0	On	20600	844	15.48	16.00	1.127	0.08	0.166	0.187
	LTE Band 5	10M	25	12	QPSK	Edge 1	0	On	20600	844	15.24	16.00	1.191	0.09	0.160	0.191
	LTE Band 5	10M	1	49	QPSK	Bottom Face	1.7	Off	20600	844	22.63	23.00	1.089	-0.03	0.193	0.210
	LTE Band 5	10M	25	12	QPSK	Bottom Face	1.7	Off	20600	844	21.41	22.00	1.146	0.09	0.150	0.172
	LTE Band 5	10M	1	49	QPSK	Edge 1	1.7	Off	20600	844	22.63	23.00	1.089	0.04	0.147	0.160
	LTE Band 5	10M	25	12	QPSK	Edge 1	1.7	Off	20600	844	21.41	22.00	1.146	0.04	0.115	0.132
#04	LTE Band 5	10M	1	49	QPSK	Edge 4	0	Off	20600	844	22.63	23.00	1.089	0.14	0.426	**0.464**
	LTE Band 5	10M	25	12	QPSK	Edge 4	0	Off	20600	844	21.41	22.00	1.146	0.12	0.327	0.375

Plot No.	Band	BW (MHz)	RB Size	RB offest	Modulation	Test Position	Gap (cm)	Power Back-off	Ch.	Freq. (MHz)	Average Power (dBm)	Tune-Up Limit (dBm)	Tune-up Scaling Factor	Power Drift (dB)	Measured 1g SAR (W/kg)	Reported 1g SAR (W/kg)
	LTE Band 4	20M	1	0	QPSK	Bottom Face	0	On	20175	1732.5	15.82	16.50	1.169	0.06	0.878	1.027
	LTE Band 4	20M	1	0	QPSK	Bottom Face	0	On	20050	1720	15.75	16.50	1.189	0.05	0.835	0.992
	LTE Band 4	20M	1	0	QPSK	Bottom Face	0	On	20300	1745	15.78	16.50	1.180	-0.03	1.120	1.322
	LTE Band 4	20M	50	0	QPSK	Bottom Face	0	On	20175	1732.5	15.60	16.50	1.230	-0.06	0.876	1.078
	LTE Band 4	20M	50	0	QPSK	Bottom Face	0	On	20050	1720	15.55	16.50	1.245	-0.1	0.858	1.068
#05	LTE Band 4	20M	50	0	QPSK	Bottom Face	0	On	20300	1745	15.54	16.50	1.247	-0.08	1.140	**1.422**
	LTE Band 4	20M	100	0	QPSK	Bottom Face	0	On	20175	1732.5	15.66	16.50	1.213	0.03	0.846	1.027
	LTE Band 4	20M	1	0	QPSK	Edge 1	0	On	20175	1732.5	15.82	16.50	1.169	0.05	0.523	0.612
	LTE Band 4	20M	50	0	QPSK	Edge 1	0	On	20175	1732.5	15.60	16.50	1.230	0.01	0.518	0.637
	LTE Band 4	20M	1	49	QPSK	Bottom Face	1.7	Off	20175	1732.5	22.77	23.50	1.183	-0.02	0.376	0.445
	LTE Band 4	20M	50	49	QPSK	Bottom Face	1.7	Off	20175	1732.5	21.82	22.50	1.169	-0.04	0.316	0.370
	LTE Band 4	20M	1	49	QPSK	Edge 1	1.7	Off	20175	1732.5	22.77	23.50	1.183	0.04	0.206	0.244
	LTE Band 4	20M	50	49	QPSK	Edge 1	1.7	Off	20175	1732.5	21.82	22.50	1.169	0.12	0.171	0.200
	LTE Band 4	20M	1	49	QPSK	Edge 4	0	Off	20175	1732.5	22.77	23.50	1.183	0.05	0.975	1.153
	LTE Band 4	20M	1	49	QPSK	Edge 4	0	Off	20050	1720	22.76	23.50	1.186	-0.02	1.020	1.209
	LTE Band 4	20M	1	49	QPSK	Edge 4	0	Off	20300	1745	22.75	23.50	1.189	-0.08	0.985	1.171
	LTE Band 4	20M	50	49	QPSK	Edge 4	0	Off	20175	1732.5	21.82	22.50	1.169	-0.01	0.788	0.922
	LTE Band 4	20M	50	49	QPSK	Edge 4	0	Off	20050	1720	21.77	22.50	1.183	-0.01	0.805	0.952
	LTE Band 4	20M	50	49	QPSK	Edge 4	0	Off	20300	1745	21.75	22.50	1.189	-0.03	0.816	0.970
	LTE Band 4	20M	100	0	QPSK	Edge 4	0	Off	20175	1732.5	21.80	22.50	1.175	-0.02	0.788	0.926
	LTE Band 2	20M	1	49	QPSK	Bottom Face	0	On	18900	1880	15.58	16.00	1.102	0.03	1.080	1.190
	LTE Band 2	20M	1	49	QPSK	Bottom Face	0	On	18700	1860	15.28	16.00	1.180	0.08	0.980	1.157
	LTE Band 2	20M	1	49	QPSK	Bottom Face	0	On	19100	1900	15.50	16.00	1.122	-0.01	1.000	1.122
	LTE Band 2	20M	50	0	QPSK	Bottom Face	0	On	18900	1880	15.56	16.00	1.107	0.01	0.998	1.104
	LTE Band 2	20M	50	0	QPSK	Bottom Face	0	On	18700	1860	15.21	16.00	1.199	0.01	0.999	1.198
	LTE Band 2	20M	50	0	QPSK	Bottom Face	0	On	19100	1900	15.39	16.00	1.151	-0.06	1.030	1.185
#06	LTE Band 2	20M	100	0	QPSK	Bottom Face	0	On	18900	1880	15.48	16.00	1.127	-0.06	1.070	**1.206**
	LTE Band 2	20M	1	49	QPSK	Edge 1	0	On	18900	1880	15.58	16.00	1.102	0.05	0.604	0.665
	LTE Band 2	20M	50	0	QPSK	Edge 1	0	On	18900	1880	15.56	16.00	1.107	-0.08	0.590	0.653
	LTE Band 2	20M	1	49	QPSK	Bottom Face	1.7	Off	18900	1880	22.51	23.00	1.119	0.03	0.369	0.413
	LTE Band 2	20M	50	49	QPSK	Bottom Face	1.7	Off	18900	1880	21.33	22.00	1.167	-0.06	0.306	0.357
	LTE Band 2	20M	1	49	QPSK	Edge 1	1.7	Off	18900	1880	22.51	23.00	1.119	0.08	0.243	0.272
	LTE Band 2	20M	50	49	QPSK	Edge 1	1.7	Off	18900	1880	21.33	22.00	1.167	-0.02	0.199	0.232
	LTE Band 2	20M	1	49	QPSK	Edge 4	0	Off	18900	1880	22.51	23.00	1.119	0.02	0.615	0.688
	LTE Band 2	20M	50	49	QPSK	Edge 4	0	Off	18900	1880	21.33	22.00	1.167	-0.03	0.501	0.585

Plot No.	Band	BW (MHz)	RB Size	RB offest	Modulation	Test Position	Gap (cm)	Power Back-off	Ch.	Freq. (MHz)	Average Power (dBm)	Tune-Up Limit (dBm)	Tune-up Scaling Factor	Power Drift (dB)	Measured 1g SAR (W/kg)	Reported 1g SAR (W/kg)
	LTE Band 7	20M	1	49	QPSK	Bottom Face	0	On	21350	2560	11.83	12.00	1.040	-0.19	1.070	1.113
	LTE Band 7	20M	1	49	QPSK	Bottom Face	0	On	20850	2510	11.53	12.00	1.114	0.13	0.816	0.909
	LTE Band 7	20M	1	49	QPSK	Bottom Face	0	On	21100	2535	11.76	12.00	1.057	0.01	1.320	1.395
	LTE Band 7	20M	50	24	QPSK	Bottom Face	0	On	21350	2560	11.69	12.00	1.074	-0.17	0.974	1.046
	LTE Band 7	20M	50	24	QPSK	Bottom Face	0	On	20850	2510	11.47	12.00	1.130	0.05	0.833	0.941
	LTE Band 7	20M	50	24	QPSK	Bottom Face	0	On	21100	2535	11.66	12.00	1.081	0.07	1.300	1.406
	LTE Band 7	20M	100	0	QPSK	Bottom Face	0	On	21350	2560	11.60	12.00	1.096	-0.05	1.070	1.173
	LTE Band 7	20M	1	49	QPSK	Edge 1	0	On	21350	2560	11.83	12.00	1.040	0.1	0.800	0.832
	LTE Band 7	20M	1	49	QPSK	Edge 1	0	On	20850	2510	11.53	12.00	1.114	-0.05	0.584	0.651
	LTE Band 7	20M	1	49	QPSK	Edge 1	0	On	21100	2535	11.76	12.00	1.057	0.08	1.270	1.342
	LTE Band 7	20M	50	24	QPSK	Edge 1	0	On	21350	2560	11.69	12.00	1.074	0.05	0.820	0.881
	LTE Band 7	20M	50	24	QPSK	Edge 1	0	On	20850	2560	11.47	12.00	1.130	0.09	0.577	0.652
	LTE Band 7	20M	50	24	QPSK	Edge 1	0	On	21100	2560	11.66	12.00	1.081	0.04	1.250	1.352
	LTE Band 7	20M	100	0	QPSK	Edge 1	0	On	21350	2560	11.60	12.00	1.096	0.07	0.712	0.781
	LTE Band 7	20M	1	49	QPSK	Bottom Face	1.7	Off	21350	2560	21.66	22.00	1.081	0.1	0.825	0.892
	LTE Band 7	20M	1	49	QPSK	Bottom Face	1.7	Off	20850	2510	21.64	22.00	1.086	0.03	0.694	0.754
	LTE Band 7	20M	1	49	QPSK	Bottom Face	1.7	Off	21100	2535	21.47	22.00	1.130	0.18	0.601	0.679
	LTE Band 7	20M	50	24	QPSK	Bottom Face	1.7	Off	21350	2560	20.43	21.00	1.140	0.13	0.633	0.722
	LTE Band 7	20M	100	0	QPSK	Bottom Face	1.7	Off	21350	2560	20.19	21.00	1.205	0.07	0.619	0.746
	LTE Band 7	20M	1	49	QPSK	Edge 1	1.7	Off	21350	2560	21.66	22.00	1.081	0.02	1.260	1.363
	LTE Band 7	20M	1	49	QPSK	Edge 1	1.7	Off	20850	2510	21.64	22.00	1.086	0.16	0.931	1.011
	LTE Band 7	20M	1	49	QPSK	Edge 1	1.7	Off	21100	2535	21.47	22.00	1.130	0.03	0.926	1.046
	LTE Band 7	20M	50	24	QPSK	Edge 1	1.7	Off	21350	2560	20.43	21.00	1.140	0.09	1.000	1.140
	LTE Band 7	20M	50	24	QPSK	Edge 1	1.7	Off	20850	2560	20.40	21.00	1.148	0.01	0.941	1.080
	LTE Band 7	20M	50	24	QPSK	Edge 1	1.7	Off	21100	2560	20.39	21.00	1.151	0.03	0.760	0.875
	LTE Band 7	20M	100	0	QPSK	Edge 1	1.7	Off	21350	2560	20.19	21.00	1.205	0.13	0.937	1.129
#07	LTE Band 7	20M	1	49	QPSK	Edge 4	0	Off	21350	2560	21.66	22.00	1.081	0.07	1.330	**1.438**
	LTE Band 7	20M	1	49	QPSK	Edge 4	0	Off	20850	2510	21.64	22.00	1.086	0.01	1.250	1.358
	LTE Band 7	20M	1	49	QPSK	Edge 4	0	Off	21100	2535	21.47	22.00	1.130	0.07	1.080	1.220
	LTE Band 7	20M	50	24	QPSK	Edge 4	0	Off	21350	2560	20.43	21.00	1.140	0.01	1.140	1.300
	LTE Band 7	20M	50	24	QPSK	Edge 4	0	Off	20850	2560	20.40	21.00	1.148	0.06	1.100	1.263
	LTE Band 7	20M	50	24	QPSK	Edge 4	0	Off	21100	2560	20.39	21.00	1.151	0.02	0.876	1.008
	LTE Band 7	20M	100	0	QPSK	Edge 4	0	Off	21350	2560	20.19	21.00	1.205	0.06	1.120	1.350

<DTS WLAN SAR>

Plot No.	Band	Mode	Test Position	Gap (cm)	Ch.	Freq. (MHz)	Average Power (dBm)	Tune-Up Limit (dBm)	Tune-up Scaling Factor	Duty Cycle %	Duty Cycle Scaling Factor	Power Drift (dB)	Measured 1g SAR (W/kg)	Reported 1g SAR (W/kg)
	WLAN 2.4GHz	802.11b 1Mbps	Bottom Face	0	1	2412	14.08	14.5	1.102	97.87	1.022	-0.09	0.914	1.029
	WLAN 2.4GHz	802.11b 1Mbps	Edge 3	0	1	2412	14.08	14.5	1.102	97.87	1.022	0.01	0.434	0.489
	WLAN 2.4GHz	802.11b 1Mbps	Bottom Face	0	6	2437	13.90	14.5	1.148	97.87	1.022	0.09	0.633	0.743
#08	WLAN 2.4GHz	802.11b 1Mbps	Bottom Face	0	11	2462	13.20	14.5	1.349	97.87	1.022	0.02	0.949	**1.308**

<UNII WLAN SAR>

Plot No.	Band	Mode	Test Position	Gap (cm)	Ch.	Freq. (MHz)	Average Power (dBm)	Tune-Up Limit (dBm)	Tune-up Scaling Factor	Duty Cycle %	Duty Cycle Scaling Factor	Power Drift (dB)	Measured 1g SAR (W/kg)	Reported 1g SAR (W/kg)
	WLAN 5.2GHz	802.11a 6Mbps	Bottom Face	0	48	5240	9.16	9.50	1.081	87.13	1.148	-0.03	0.055	0.068
	WLAN 5.2GHz	802.11a 6Mbps	Edge 3	0	48	5240	9.16	9.50	1.081	87.13	1.148	0.03	0.124	0.154
#09	WLAN 5.2GHz	802.11n HT40 MCS0	Edge 3	0	46	5230	11.05	11.50	1.109	75.71	1.321	0.01	0.490	**0.718**
	WLAN 5.3GHz	802.11a 6Mbps	Bottom Face	0	60	5300	9.06	9.50	1.107	87.13	1.148	-0.09	0.058	0.074
#10	WLAN 5.3GHz	802.11a 6Mbps	Edge 3	0	60	5300	9.06	9.50	1.107	87.13	1.148	0.02	0.103	**0.131**
	WLAN 5.3GHz	802.11n HT40 MCS0	Edge 3	0	54	5270	10.86	11.00	1.033	75.71	1.321	0.02	0.081	0.111
	WLAN 5.5GHz	802.11a 6Mbps	Bottom Face	0	136	5680	11.71	12.00	1.069	87.13	1.148	-0.05	0.412	0.506
	WLAN 5.5GHz	802.11a 6Mbps	Edge 3	0	136	5680	11.71	12.00	1.069	87.13	1.148	0.07	0.501	0.615
	WLAN 5.5GHz	802.11a 6Mbps	Bottom Face	0	100	5500	9.76	10.00	1.057	87.13	1.148	0.05	0.304	0.369
	WLAN 5.5GHz	802.11a 6Mbps	Bottom Face	0	116	5580	10.64	11.00	1.087	87.13	1.148	0.03	0.472	0.589
	WLAN 5.5GHz	802.11a 6Mbps	Edge 3	0	100	5500	9.76	10.00	1.057	87.13	1.148	0.07	0.309	0.375
#11	WLAN 5.5GHz	802.11a 6Mbps	Edge 3	0	116	5580	10.64	11.00	1.087	87.13	1.148	-0.06	0.545	**0.680**

16.2 Repeated SAR Measurement

No.	Band	BW (MHz)	RB Size	RB offest	Mode	Test Position	Gap (cm)	Power Back-off	Ch.	Freq. (MHz)	Average Power (dBm)	Tune-Up Limit (dBm)	Tune-up Scaling Factor	Duty Cycle %	Duty Cycle Scaling Factor	Power Drift (dB)	Measured 1g SAR (W/kg)	Ratio	Reported 1g SAR (W/kg)
1st	WCDMA Band V	-	-	-	RMC 12.2Kbps	Edge 4	0	Off	4132	826.4	24.60	25.00	1.096	100	1.000	-0.08	0.853	1	0.935
2nd	WCDMA Band V	-	-	-	RMC 12.2Kbps	Edge 4	0	Off	4132	826.4	24.60	25.00	1.096	100	1.000	-0.02	0.843	1.012	0.924
1st	LTE Band 4	20M	50	0	QPSK	Bottom Face	0	On	20300	1745	15.54	16.50	1.247	100	1.000	-0.08	1.140	1	1.422
2nd	LTE Band 4	20M	50	0	QPSK	Bottom Face	0	On	20300	1745	15.54	16.50	1.247	100	1.000	-0.08	1.090	1.046	1.360
1st	LTE Band 2	20M	1	49	QPSK	Bottom Face	0	On	18900	1880	15.58	16.00	1.102	100	1.000	0.03	1.080	1	1.190
2nd	LTE Band 2	20M	1	49	QPSK	Bottom Face	0	On	18900	1880	15.58	16.00	1.102	100	1.000	-0.08	0.987	1.094	1.087
1st	LTE Band 7	20M	1	49	QPSK	Edge 4	0	Off	21350	2560	21.66	22.00	1.081	100	1.000	0.07	1.330	1	1.438
2nd	LTE Band 7	20M	1	49	QPSK	Edge 4	0	Off	21350	2560	21.66	22.00	1.081	100	1.000	-0.07	1.320	1.008	1.427
1st	WLAN 2.4GHz	-	-	-	802.11b 1Mbps	Bottom Face	0	-	11	2462	13.20	14.5	1.349	97.87	1.022	0.02	0.949	1	1.308
2nd	WLAN 2.4GHz	-	-	-	802.11b 1Mbps	Bottom Face	0	-	11	2462	13.20	14.5	1.349	97.87	1.022	0.02	0.875	1.085	1.206

General Note:

1. Per KDB 865664 D01v01r03, for each frequency band, repeated SAR measurement is required only when the measured SAR is ≥0.8W/kg.
2. Per KDB 865664 D01v01r03, if the ratio among the repeated measurement is ≤ 1.2 and the measured SAR <1.45W/kg, only one repeated measurement is required.
3. The ratio is the difference in percentage between original and repeated *measured SAR*.
4. All measurement SAR result is scaled-up to account for tune-up tolerance and is compliant.

17. Simultaneous Transmission Analysis

NO.	Simultaneous Transmission Configurations	Tablet	Note
		Body	
1.	WCDMA(data) + WLAN2.4GHz(data)	Yes	2.4GHz Hotspot
2.	LTE(data) + WLAN2.4GHz(data)	Yes	2.4GHz Hotspot
3.	WCDMA(data) + WLAN5GHz(data)	Yes	WiFi Direct (GC)
4.	LTE(data) + WLAN5GHz(data)	Yes	WiFi Direct (GC)
5.	WCDMA(data) + Bluetooth(data)	Yes	Bluetooth Tethering
6.	LTE(data) + Bluetooth(data)	Yes	Bluetooth Tethering

General Note:

1. This device 2.4GHz WLAN supports Hotspot operation, and 2.4GHzWLAN supports WiFi Direct (Group Client / Group Owner), and 5.2GHz / 5.3GHz / 5.5GHz supports WiFi Direct (Group Client only).
2. EUT will choose either WCDMA or LTE according to the network signal condition; therefore, they will not operate simultaneously at any moment.
3. WLAN and Bluetooth share the same antenna, and cannot transmit simultaneously
4. EUT will choose either WLAN 2.4GHz or WLAN 5GHz according to the network signal condition; therefore, 2.4GHz WLAN and 5GHz WLAN will not operate simultaneously at any moment.
5. The worst case 5GHz WLAN reported SAR for each configuration was used for SAR summation, therefore, the following summations represent the absolute worst cases for simultaneous transmission with 5GHz WLAN.
6. For simultaneous transmission analysis for exposure position of bottom face 1.7cm, WLAN SAR tested at 0mm separation is worse and the test data is used for conservative SAR summation.
7. The reported SAR summation is calculated based on the same configuration and test position.
8. Per KDB 447498 D01v05r02, simultaneous transmission SAR is compliant if,
   i) Scalar SAR summation < 1.6W/kg.
   ii) SPLSR = $(SAR_1 + SAR_2)^{1.5}$ / (*min. separation distance, mm*), and the peak separation distance is determined from the square root of $[(x_1-x_2)^2 + (y_1-y_2)^2 + (z_1-z_2)^2]$, where (x_1, y_1, z_1) and (x_2, y_2, z_2) are the coordinates of the extrapolated peak SAR locations in the zoom scan.
   iii) If SPLSR ≤ 0.04, simultaneously transmission SAR measurement is not necessary.
   iv) Simultaneously transmission SAR measurement, and the reported multi-band SAR < 1.6W/kg.
   v) The SPLSR calculated results please refer to section 17.2.
9. For simultaneous transmission analysis, Bluetooth SAR is estimated per KDB 447498 D01v05r02 based on the formula below.
   i) (*max. power of channel, including tune-up tolerance, mW*)/(*min. test separation distance, mm*)]·[$\sqrt{f(GHz)/x}$] W/kg for *test separation distances* ≤ 50 mm; where *x* = 7.5 for 1-g SAR, and *x* = 18.75 for 10-g SAR.
   ii) 0.4 W/kg for 1-g SAR and 1.0 W/kg for 10-g SAR, when the *test separation distances* is > 50 mm.
   iii) Bluetooth estimated SAR is conservatively determined by 5mm separation, for all applicable exposure positions.

Bluetooth Max Power	Exposure Position	All Positions
3.5 dBm	Estimated SAR (W/kg)	0.084 W/kg

17.1 Tablet Body Exposure Conditions

<WWAN PCB + WLAN DTS>

WWAN Band		Exposure Position	WWAN PCB Max. WWAN SAR (W/kg)	WLAN DTS Max. WLAN SAR (W/kg)	Summed SAR (W/kg)	SPLSR	Case No
WCDMA	Band V	Bottom Face at 1.7cm	0.380	1.308	**1.69**	**0.01**	**#1**
		Edge 1 at 1.7cm	0.306		0.31		
		Bottom Face at 0cm	0.346	1.308	**1.65**	**0.01**	**#2**
		Edge1 at 0cm	0.246		0.25		
		Edge2 at 0cm	0.161		0.16		
		Edge3 at 0cm		0.489	0.49		
		Edge4 at 0cm	0.935		0.94		
	Band II	Bottom Face at 1.7cm	0.585	1.308	**1.89**	**0.01**	**#3**
		Edge 1 at 1.7cm	0.458		0.46		
		Bottom Face at 0cm	0.999	1.308	**2.31**	**0.02**	**#4**
		Edge1 at 0cm	0.654		0.65		
		Edge3 at 0cm		0.489	0.49		
		Edge4 at 0cm	1.160		1.16		
LTE	Band 17	Bottom Face at 1.7cm	0.165	1.308	1.47		
		Edge 1 at 1.7cm	0.116		0.12		
		Bottom Face at 0cm	0.472	1.308	**1.78**	**0.01**	**#5**
		Edge1 at 0cm	0.257		0.26		
		Edge3 at 0cm		0.489	0.49		
		Edge4 at 0cm	0.244		0.24		
	Band 5	Bottom Face at 1.7cm	0.210	1.308	1.52		
		Edge 1 at 1.7cm	0.160		0.16		
		Bottom Face at 0cm	0.267	1.308	**1.58**		
		Edge1 at 0cm	0.191		0.19		
		Edge3 at 0cm		0.489	0.49		
		Edge4 at 0cm	0.464		0.46		
	Band 4	Bottom Face at 1.7cm	0.445	1.308	**1.75**	**0.01**	**#6**
		Edge 1 at 1.7cm	0.244		0.24		
		Bottom Face at 0cm	1.422	1.308	**2.73**	**0.02**	**#7**
		Edge1 at 0cm	0.637		0.64		
		Edge3 at 0cm		0.489	0.49		
		Edge4 at 0cm	1.209		1.21		
	Band 2	Bottom Face at 1.7cm	0.413	1.308	**1.72**	**0.01**	**#8**
		Edge 1 at 1.7cm	0.272		0.27		
		Bottom Face at 0cm	1.206	1.308	**2.51**	**0.02**	**#9**
		Edge1 at 0cm	0.665		0.67		
		Edge3 at 0cm		0.489	0.49		
		Edge4 at 0cm	0.688		0.69		
	Band 7	Bottom Face at 1.7cm	0.892	1.308	**2.20**	**0.02**	**#10**
		Edge 1 at 1.7cm	1.363		1.36		
		Bottom Face at 0cm	1.406	1.308	**2.71**	**0.02**	**#11**
		Edge1 at 0cm	1.352		1.35		
		Edge3 at 0cm		0.489	0.49		
		Edge4 at 0cm	1.438		1.44		

<WWAN PCB + WLAN NII>

WWAN Band		Exposure Position	WWAN PCB Max. WWAN SAR (W/kg)	WLAN NII Max. WLAN SAR (W/kg)	Summed SAR (W/kg)	SPLSR	Case No
WCDMA	Band V	Bottom Face at 1.7cm	0.380	0.589	0.97		
		Edge 1 at 1.7cm	0.306		0.31		
		Bottom Face at 0cm	0.346	0.589	0.94		
		Edge1 at 0cm	0.246		0.25		
		Edge2 at 0cm	0.161		0.16		
		Edge3 at 0cm		0.718	0.72		
		Edge4 at 0cm	0.935		0.94		
	Band II	Bottom Face at 1.7cm	0.585	0.589	1.17		
		Edge 1 at 1.7cm	0.458		0.46		
		Bottom Face at 0cm	0.999	0.589	**1.59**		
		Edge1 at 0cm	0.654		0.65		
		Edge3 at 0cm		0.718	0.72		
		Edge4 at 0cm	1.160		1.16		
LTE	Band 17	Bottom Face at 1.7cm	0.165	0.589	0.75		
		Edge 1 at 1.7cm	0.116		0.12		
		Bottom Face at 0cm	0.472	0.589	1.06		
		Edge1 at 0cm	0.257		0.26		
		Edge3 at 0cm		0.718	0.72		
		Edge4 at 0cm	0.244		0.24		
	Band 5	Bottom Face at 1.7cm	0.210	0.589	0.80		
		Edge 1 at 1.7cm	0.160		0.16		
		Bottom Face at 0cm	0.267	0.589	0.86		
		Edge1 at 0cm	0.191		0.19		
		Edge3 at 0cm		0.718	0.72		
		Edge4 at 0cm	0.464		0.46		
	Band 4	Bottom Face at 1.7cm	0.445	0.589	1.03		
		Edge 1 at 1.7cm	0.244		0.24		
		Bottom Face at 0cm	1.422	0.589	**2.01**	**0.01**	**#12**
		Edge1 at 0cm	0.637		0.64		
		Edge3 at 0cm		0.718	0.72		
		Edge4 at 0cm	1.209		1.21		
	Band 2	Bottom Face at 1.7cm	0.413	0.589	1.00		
		Edge 1 at 1.7cm	0.272		0.27		
		Bottom Face at 0cm	1.206	0.589	**1.80**	**0.01**	**#13**
		Edge1 at 0cm	0.665		0.67		
		Edge3 at 0cm		0.718	0.72		
		Edge4 at 0cm	0.688		0.69		
	Band 7	Bottom Face at 1.7cm	0.892	0.589	1.48		
		Edge 1 at 1.7cm	1.363		1.36		
		Bottom Face at 0cm	1.406	0.589	**2.00**	**0.01**	**#14**
		Edge1 at 0cm	1.352		1.35		
		Edge3 at 0cm		0.718	0.72		
		Edge4 at 0cm	1.438		1.44		

<WWAN PCB + Bluetooth DSS>

WWAN Band		Exposure Position	WWAN PCB Max. WWAN SAR (W/kg)	Bluetooth DSS Max. Bluetooth SAR (W/kg)	Summed SAR (W/kg)	SPLSR	Case No
WCDMA	Band V	Bottom Face at 1.7cm	0.380	0.084	0.46		
		Edge 1 at 1.7cm	0.306	0.084	0.39		
		Bottom Face at 0cm	0.346	0.084	0.43		
		Edge1 at 0cm	0.246	0.084	0.33		
		Edge2 at 0cm	0.161	0.084	0.25		
		Edge4 at 0cm	0.935	0.084	1.02		
	Band II	Bottom Face at 1.7cm	0.585	0.084	0.67		
		Edge 1 at 1.7cm	0.458	0.084	0.54		
		Bottom Face at 0cm	0.999	0.084	1.08		
		Edge1 at 0cm	0.654	0.084	0.74		
		Edge4 at 0cm	1.160	0.084	1.24		
LTE	Band 17	Bottom Face at 1.7cm	0.165	0.084	0.25		
		Edge 1 at 1.7cm	0.116	0.084	0.20		
		Bottom Face at 0cm	0.472	0.084	0.56		
		Edge1 at 0cm	0.257	0.084	0.34		
		Edge4 at 0cm	0.244	0.084	0.33		
	Band 5	Bottom Face at 1.7cm	0.210	0.084	0.29		
		Edge 1 at 1.7cm	0.160	0.084	0.24		
		Bottom Face at 0cm	0.267	0.084	0.35		
		Edge1 at 0cm	0.191	0.084	0.28		
		Edge4 at 0cm	0.464	0.084	0.55		
	Band 4	Bottom Face at 1.7cm	0.445	0.084	0.53		
		Edge 1 at 1.7cm	0.244	0.084	0.33		
		Bottom Face at 0cm	1.422	0.084	1.51		
		Edge1 at 0cm	0.637	0.084	0.72		
		Edge4 at 0cm	1.209	0.084	1.29		
	Band 2	Bottom Face at 1.7cm	0.413	0.084	0.50		
		Edge 1 at 1.7cm	0.272	0.084	0.36		
		Bottom Face at 0cm	1.206	0.084	1.29		
		Edge1 at 0cm	0.665	0.084	0.75		
		Edge4 at 0cm	0.688	0.084	0.77		
	Band 7	Bottom Face at 1.7cm	0.892	0.084	0.98		
		Edge 1 at 1.7cm	1.363	0.084	1.45		
		Bottom Face at 0cm	1.406	0.084	1.49		
		Edge1 at 0cm	1.352	0.084	1.44		
		Edge4 at 0cm	1.438	0.084	1.52		

17.2 SPLSR Evaluation and Analysis

General Note:

SPLSR = $(SAR_1 + SAR_2)^{1.5}$ / (*min. separation distance, mm*). If SPLSR ≤ 0.04, simultaneously transmission SAR measurement is not necessary.

Case No #1 Position	Band	SAR (W/kg)	Gap (cm)	SAR peak location (m)			3D distance (mm)	Pair SAR sum (W/kg)	SPLSR	Simultaneous SAR
				X	Y	Z				
Bottom Face	WCDMA Band V	0.38	1.7	0.042	0.0865	-0.182	197.6	1.69	0.01	Not required
	WLAN 2.4GHz	1.308	0	-0.0348	-0.0956	-0.182				

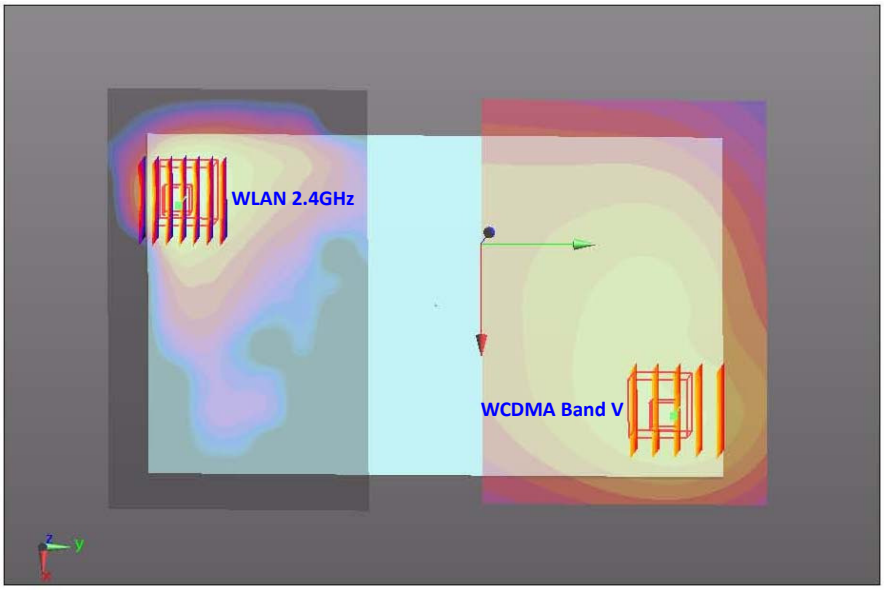

Case No #2 Position	Band	SAR (W/kg)	Gap (cm)	SAR peak location (m)			3D distance (mm)	Pair SAR sum (W/kg)	SPLSR	Simultaneous SAR
				X	Y	Z				
Bottom Face	WCDMA Band V	0.346	0	0.0325	0.1	-0.182	206.9	1.65	0.01	Not required
	WLAN 2.4GHz	1.308	0	-0.0348	-0.0956	-0.182				

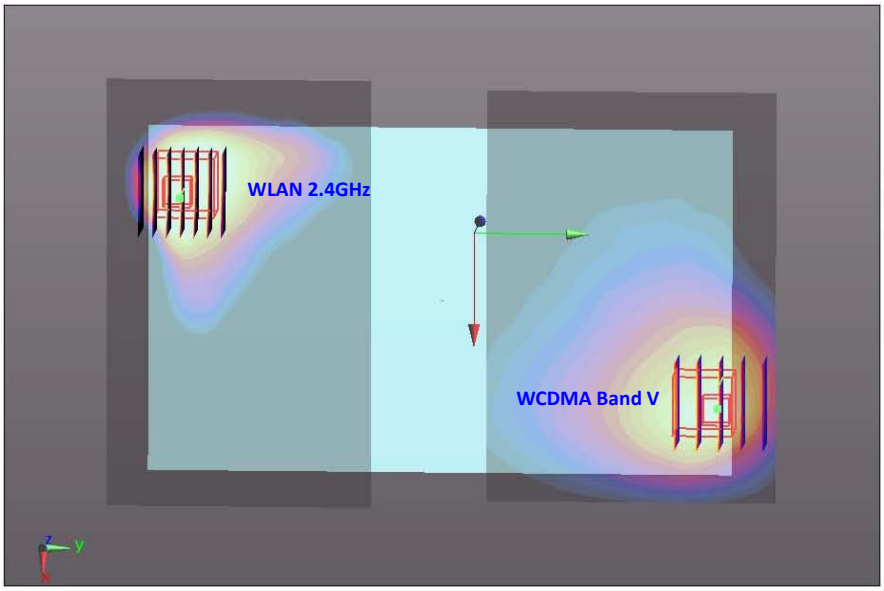

Case No #3 Position	Band	SAR (W/kg)	Gap (cm)	SAR peak location (m)			3D distance (mm)	Pair SAR sum (W/kg)	SPLSR	Simultaneous SAR
				X	Y	Z				
Bottom Face	WCDMA Band II	0.585	1.7	0.0325	0.099	-0.182	205.9	1.89	0.01	Not required
	WLAN 2.4GHz	1.308	0	-0.0348	-0.0956	-0.182				

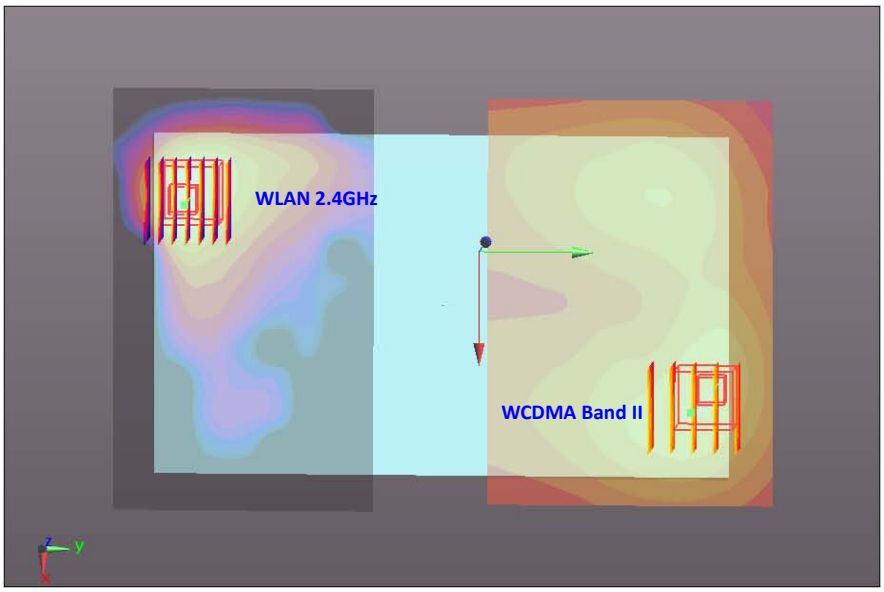

Case No #4 Position	Band	SAR (W/kg)	Gap (cm)	SAR peak location (m)			3D distance (mm)	Pair SAR sum (W/kg)	SPLSR	Simultaneous SAR
				X	Y	Z				
Bottom Face	WCDMA Band II	0.999	0	0.026	0.0975	-0.182	202.4	2.31	0.02	Not required
	WLAN 2.4GHz	1.308	0	-0.0348	-0.0956	-0.182				

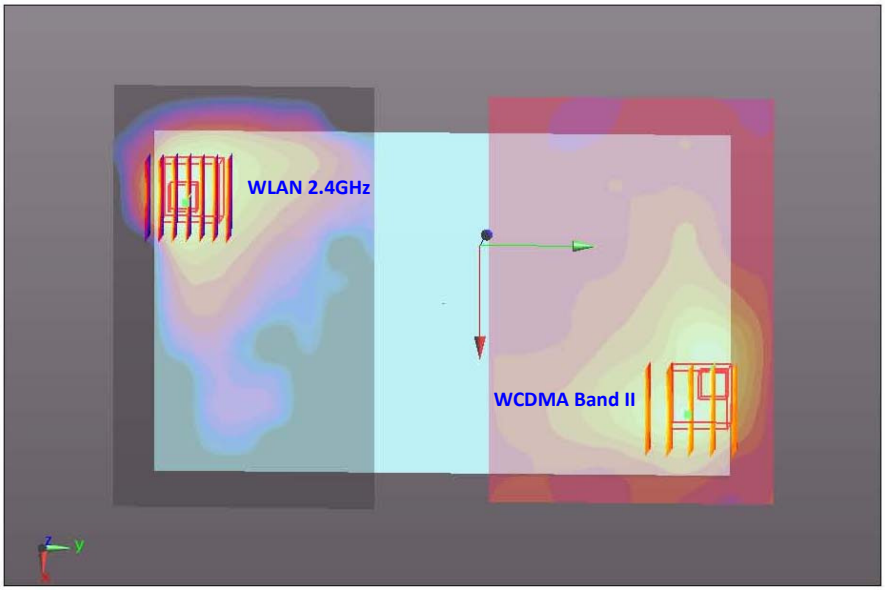

Case No #5 Position	Band	SAR (W/kg)	Gap (cm)	SAR peak location (m)			3D distance (mm)	Pair SAR sum (W/kg)	SPLSR	Simultaneous SAR
				X	Y	Z				
Bottom Face	LTE Band 17	0.472	0	0.0325	0.1	-0.182	206.9	1.78	0.01	Not required
	WLAN 2.4GHz	1.308	0	-0.0348	-0.0956	-0.182				

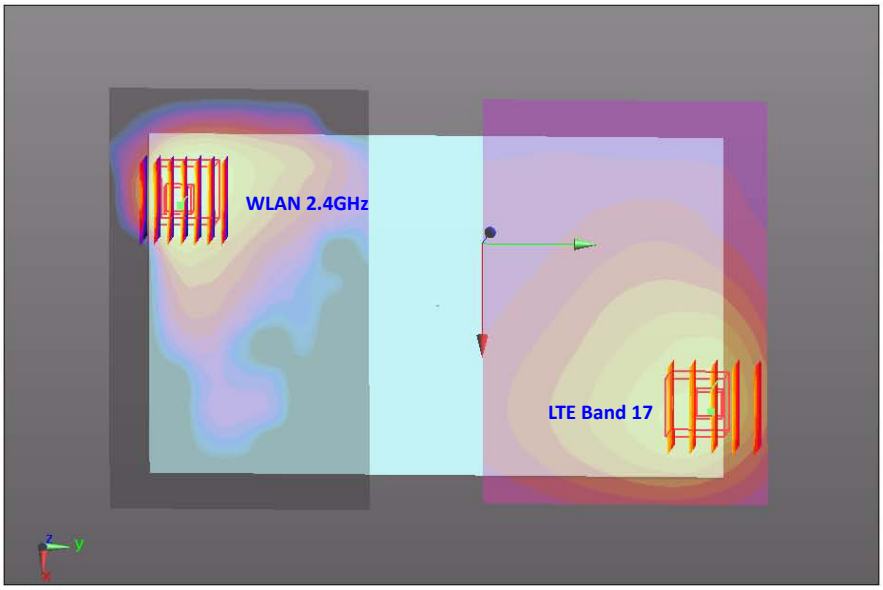

Case No #6 Position	Band	SAR (W/kg)	Gap (cm)	SAR peak location (m)			3D distance (mm)	Pair SAR sum (W/kg)	SPLSR	Simultaneous SAR
				X	Y	Z				
Bottom Face	LTE Band 4	0.445	1.7	0.0405	0.1	-0.182	209.6	1.75	0.01	Not required
	WLAN 2.4GHz	1.308	0	-0.0348	-0.0956	-0.182				

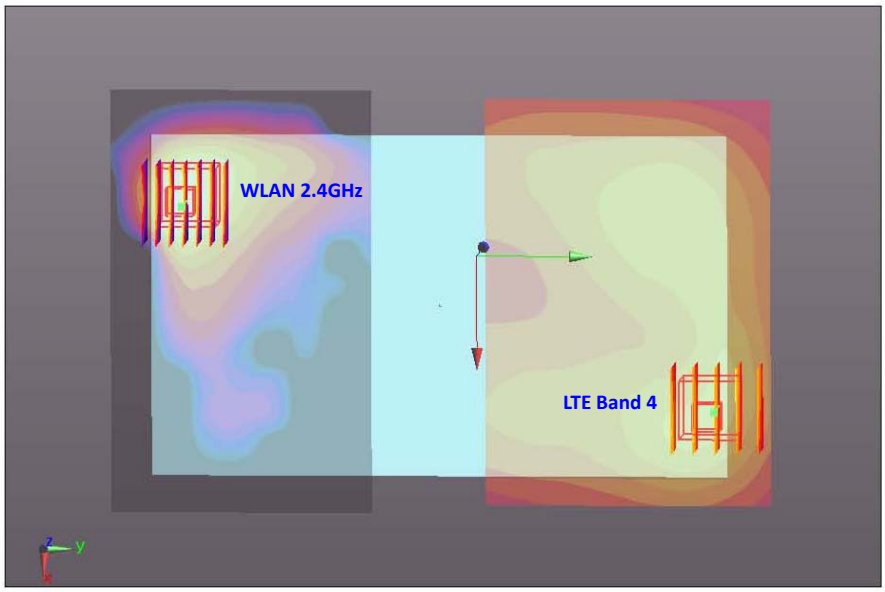

Case No #7 Position	Band	SAR (W/kg)	Gap (cm)	SAR peak location (m)			3D distance (mm)	Pair SAR sum (W/kg)	SPLSR	Simultaneous SAR
				X	Y	Z				
Bottom Face	LTE Band 4	1.422	0	0.022	0.0965	-0.181	200.3	2.73	0.02	Not required
	WLAN 2.4GHz	1.308	0	-0.0348	-0.0956	-0.182				

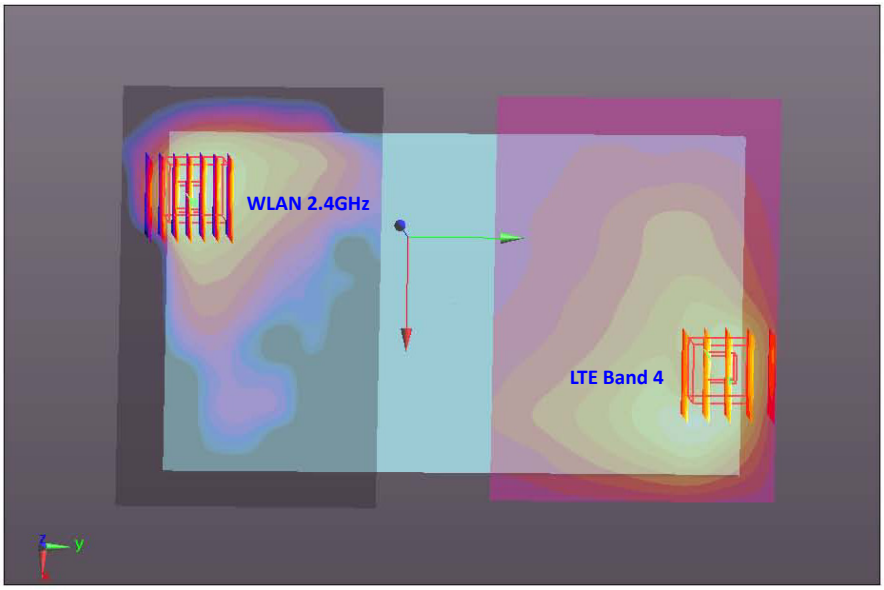

Case No #8 Position	Band	SAR (W/kg)	Gap (cm)	SAR peak location (m)			3D distance (mm)	Pair SAR sum (W/kg)	SPLSR	Simultaneous SAR
				X	Y	Z				
Bottom Face	LTE Band 2	0.413	1.7	0.0405	0.1	-0.182	209.6	1.72	0.01	Not required
	WLAN 2.4GHz	1.308	0	-0.0348	-0.0956	-0.182				

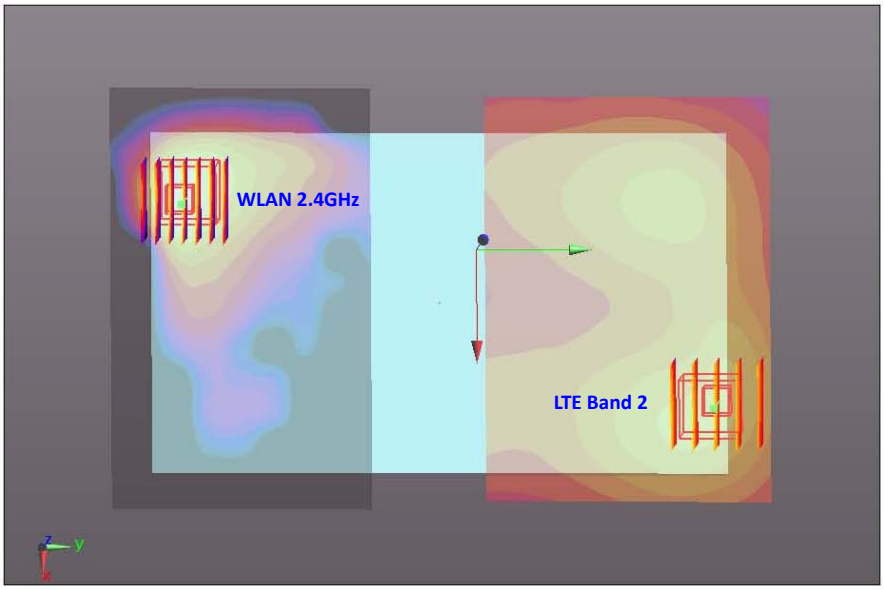

Case No #9 Position	Band	SAR (W/kg)	Gap (cm)	SAR peak location (m)			3D distance (mm)	Pair SAR sum (W/kg)	SPLSR	Simultaneous SAR
				X	Y	Z				
Bottom Face	LTE Band 2	1.206	0	0.022	0.103	-0.181	206.6	2.51	0.02	Not required
	WLAN 2.4GHz	1.308	0	-0.0348	-0.0956	-0.182				

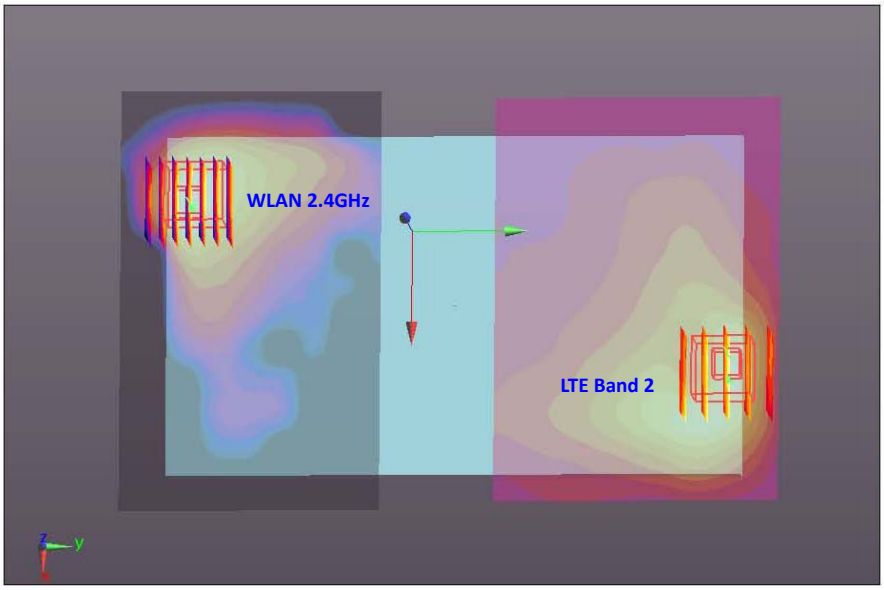

Case No #10 Position	Band	SAR (W/kg)	Gap (cm)	SAR peak location (m)			3D distance (mm)	Pair SAR sum (W/kg)	SPLSR	Simultaneous SAR
				X	Y	Z				
Bottom Face	LTE Band 7	0.892	1.7	0.0228	0.108	-0.182	211.6	2.20	0.02	Not required
	WLAN 2.4GHz	1.308	0	-0.0348	-0.0956	-0.182				

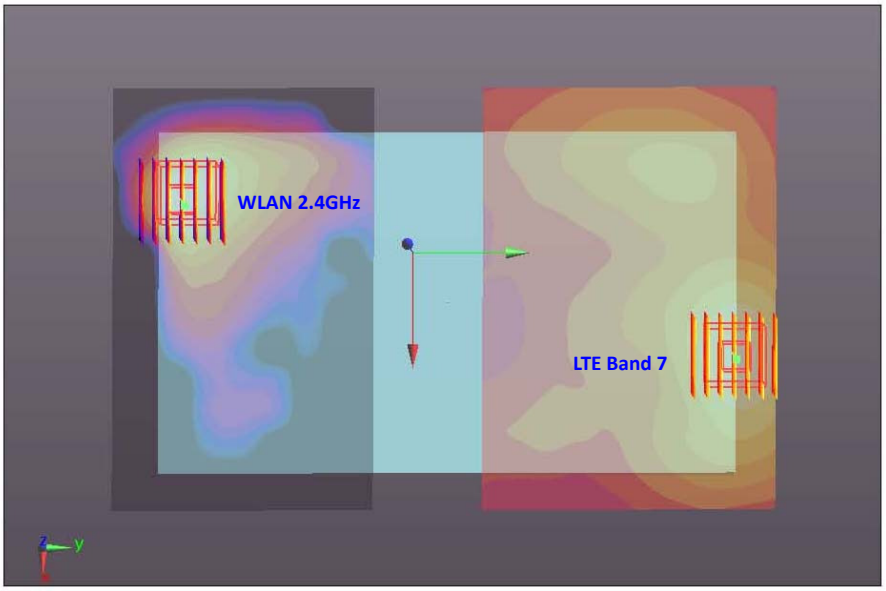

Case No #11 Position	Band	SAR (W/kg)	Gap (cm)	SAR peak location (m)			3D distance (mm)	Pair SAR sum (W/kg)	SPLSR	Simultaneous SAR
				X	Y	Z				
Bottom Face	LTE Band 7	1.406	0	0.0228	0.0992	-0.182	203.1	2.71	0.02	Not required
	WLAN 2.4GHz	1.308	0	-0.0348	-0.0956	-0.182				

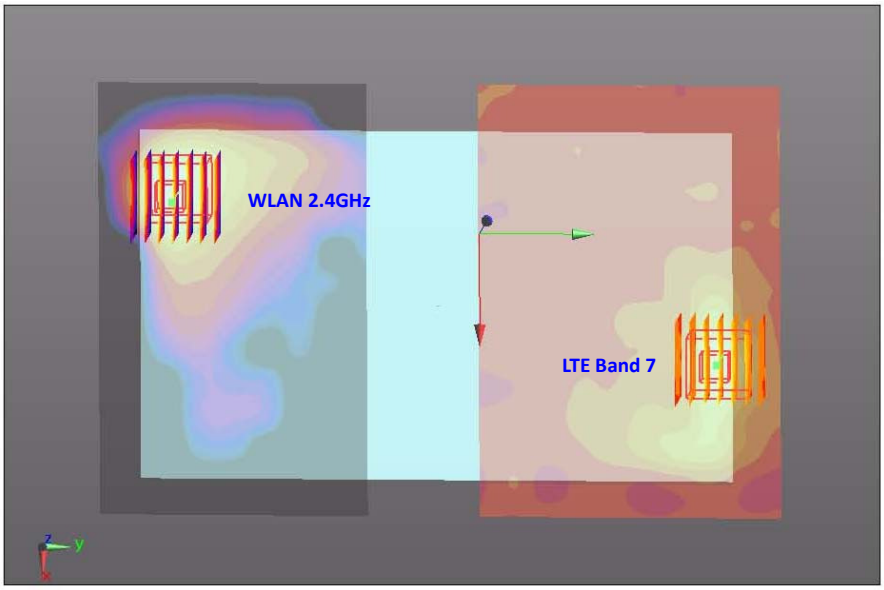

Case No #12 Position	Band	SAR (W/kg)	Gap (cm)	SAR peak location (m)			3D distance (mm)	Pair SAR sum (W/kg)	SPLSR	Simultaneous SAR
				X	Y	Z				
Bottom Face	LTE Band 4	1.422	0	0.022	0.0965	-0.181	202.4	2.01	0.01	Not required
	WLAN 5GHz	0.589	0	-0.034	-0.098	-0.183				

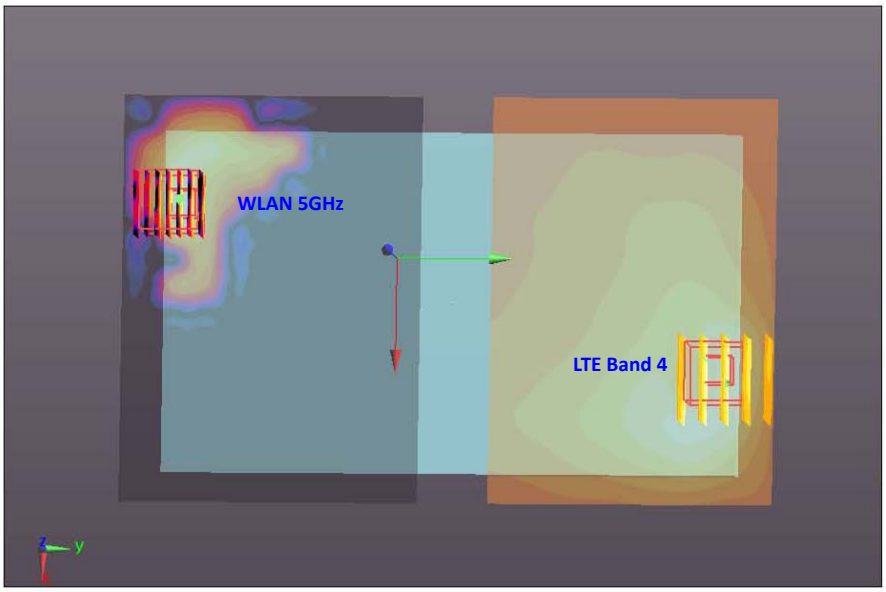

Case No #13 Position	Band	SAR (W/kg)	Gap (cm)	SAR peak location (m)			3D distance (mm)	Pair SAR sum (W/kg)	SPLSR	Simultaneous SAR
				X	Y	Z				
Bottom Face	LTE Band 2	1.206	0	0.022	0.103	-0.181	208.7	1.80	0.01	Not required
	WLAN 5GHz	0.589	0	-0.034	-0.098	-0.183				

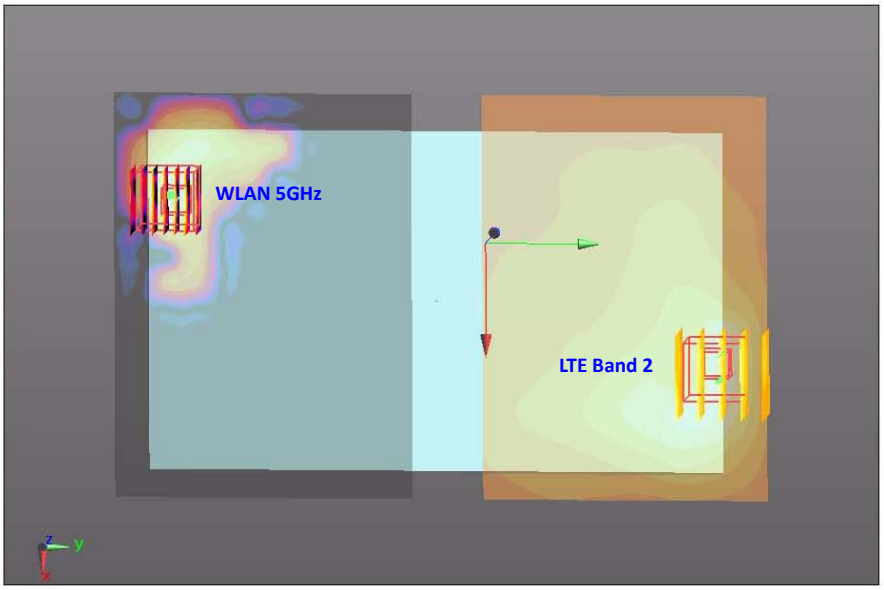

Case No #14 Position	Band	SAR (W/kg)	Gap (cm)	SAR peak location (m)			3D distance (mm)	Pair SAR sum (W/kg)	SPLSR	Simultaneous SAR
				X	Y	Z				
Bottom Face	LTE Band 7	1.406	0	0.0228	0.0992	-0.182	205.2	2.00	0.01	Not required
	WLAN 5GHz	0.589	0	-0.034	-0.098	-0.183				

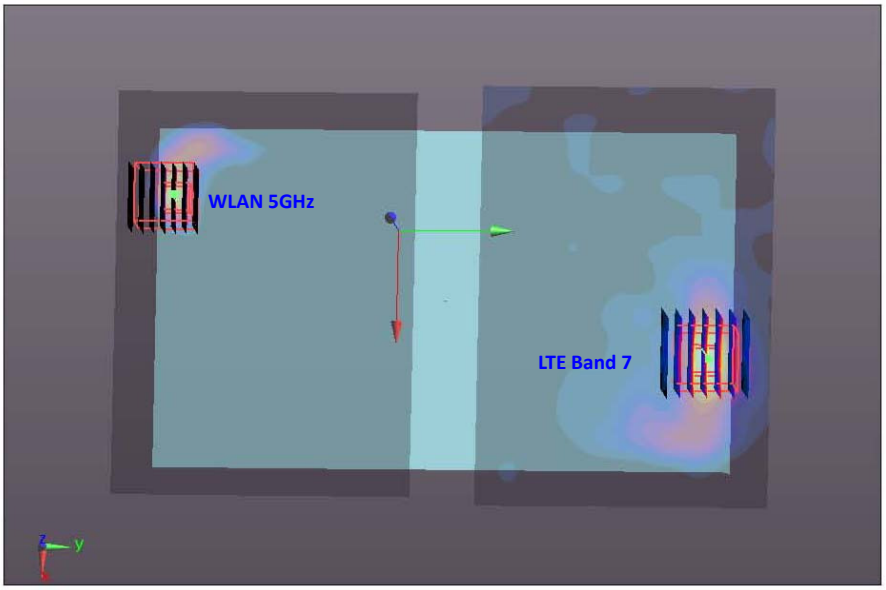

Test Engineer： Luke Lu

18. Uncertainty Assessment

The component of uncertainly may generally be categorized according to the methods used to evaluate them. The evaluation of uncertainly by the statistical analysis of a series of observations is termed a Type An evaluation of uncertainty. The evaluation of uncertainty by means other than the statistical analysis of a series of observation is termed a Type B evaluation of uncertainty. Each component of uncertainty, however evaluated, is represented by an estimated standard deviation, termed standard uncertainty, which is determined by the positive square root of the estimated variance.

A Type A evaluation of standard uncertainty may be based on any valid statistical method for treating data. This includes calculating the standard deviation of the mean of a series of independent observations; using the method of least squares to fit a curve to the data in order to estimate the parameter of the curve and their standard deviations; or carrying out an analysis of variance in order to identify and quantify random effects in certain kinds of measurement.

A type B evaluation of standard uncertainty is typically based on scientific judgment using all of the relevant information available. These may include previous measurement data, experience, and knowledge of the behavior and properties of relevant materials and instruments, manufacture's specification, data provided in calibration reports and uncertainties assigned to reference data taken from handbooks. Broadly speaking, the uncertainty is either obtained from an outdoor source or obtained from an assumed distribution, such as the normal distribution, rectangular or triangular distributions indicated in table below.

Uncertainty Distributions	Normal	Rectangular	Triangular	U-Shape
Multi-plying Factor[(a)]	1/k[(b)]	$1/\sqrt{3}$	$1/\sqrt{6}$	$1/\sqrt{2}$

(a) standard uncertainty is determined as the product of the multiplying factor and the estimated range of variations in the measured quantity

(b) κ is the coverage factor

Table 18.1. Standard Uncertainty for Assumed Distribution

The combined standard uncertainty of the measurement result represents the estimated standard deviation of the result. It is obtained by combining the individual standard uncertainties of both Type A and Type B evaluation using the usual "root-sum-squares" (RSS) methods of combining standard deviations by taking the positive square root of the estimated variances.

Expanded uncertainty is a measure of uncertainty that defines an interval about the measurement result within which the measured value is confidently believed to lie. It is obtained by multiplying the combined standard uncertainty by a coverage factor. Typically, the coverage factor ranges from 2 to 3. Using a coverage factor allows the true value of a measured quantity to be specified with a defined probability within the specified uncertainty range. For purpose of this document, a coverage factor two is used, which corresponds to confidence interval of about 95 %. The DASY uncertainty Budget is shown in the following tables.

Error Description	Uncertainty Value (±%)	Probability Distribution	Divisor	Ci (1g)	Ci (10g)	Standard Uncertainty (1g)	Standard Uncertainty (10g)
Measurement System							
Probe Calibration	6.0	Normal	1	1	1	± 6.0 %	± 6.0 %
Axial Isotropy	4.7	Rectangular	√3	0.7	0.7	± 1.9 %	± 1.9 %
Hemispherical Isotropy	9.6	Rectangular	√3	0.7	0.7	± 3.9 %	± 3.9 %
Boundary Effects	1.0	Rectangular	√3	1	1	± 0.6 %	± 0.6 %
Linearity	4.7	Rectangular	√3	1	1	± 2.7 %	± 2.7 %
System Detection Limits	1.0	Rectangular	√3	1	1	± 0.6 %	± 0.6 %
Readout Electronics	0.3	Normal	1	1	1	± 0.3 %	± 0.3 %
Response Time	0.8	Rectangular	√3	1	1	± 0.5 %	± 0.5 %
Integration Time	2.6	Rectangular	√3	1	1	± 1.5 %	± 1.5 %
RF Ambient Noise	3.0	Rectangular	√3	1	1	± 1.7 %	± 1.7 %
RF Ambient Reflections	3.0	Rectangular	√3	1	1	± 1.7 %	± 1.7 %
Probe Positioner	0.4	Rectangular	√3	1	1	± 0.2 %	± 0.2 %
Probe Positioning	2.9	Rectangular	√3	1	1	± 1.7 %	± 1.7 %
Max. SAR Eval.	1.0	Rectangular	√3	1	1	± 0.6 %	± 0.6 %
Test Sample Related							
Device Positioning	2.9	Normal	1	1	1	± 2.9 %	± 2.9 %
Device Holder	3.6	Normal	1	1	1	± 3.6 %	± 3.6 %
Power Drift	5.0	Rectangular	√3	1	1	± 2.9 %	± 2.9 %
Phantom and Setup							
Phantom Uncertainty	4.0	Rectangular	√3	1	1	± 2.3 %	± 2.3 %
Liquid Conductivity (Target)	5.0	Rectangular	√3	0.64	0.43	± 1.8 %	± 1.2 %
Liquid Conductivity (Meas.)	2.5	Normal	1	0.64	0.43	± 1.6 %	± 1.1 %
Liquid Permittivity (Target)	5.0	Rectangular	√3	0.6	0.49	± 1.7 %	± 1.4 %
Liquid Permittivity (Meas.)	2.5	Normal	1	0.6	0.49	± 1.5 %	± 1.2 %
Combined Standard Uncertainty						± 11.0 %	± 10.8 %
Coverage Factor for 95 %						K=2	
Expanded Uncertainty						**± 22.0 %**	**± 21.5 %**

Table 18.2. Uncertainty Budget for frequency range 300 MHz to 3 GHz

Error Description	Uncertainty Value (±%)	Probability Distribution	Divisor	Ci (1g)	Ci (10g)	Standard Uncertainty (1g)	Standard Uncertainty (10g)
Measurement System							
Probe Calibration	6.55	Normal	1	1	1	± 6.55 %	± 6.55 %
Axial Isotropy	4.7	Rectangular	√3	0.7	0.7	± 1.9 %	± 1.9 %
Hemispherical Isotropy	9.6	Rectangular	√3	0.7	0.7	± 3.9 %	± 3.9 %
Boundary Effects	2.0	Rectangular	√3	1	1	± 1.2 %	± 1.2 %
Linearity	4.7	Rectangular	√3	1	1	± 2.7 %	± 2.7 %
System Detection Limits	1.0	Rectangular	√3	1	1	± 0.6 %	± 0.6 %
Readout Electronics	0.3	Normal	1	1	1	± 0.3 %	± 0.3 %
Response Time	0.8	Rectangular	√3	1	1	± 0.5 %	± 0.5 %
Integration Time	2.6	Rectangular	√3	1	1	± 1.5 %	± 1.5 %
RF Ambient Noise	3.0	Rectangular	√3	1	1	± 1.7 %	± 1.7 %
RF Ambient Reflections	3.0	Rectangular	√3	1	1	± 1.7 %	± 1.7 %
Probe Positioner	0.8	Rectangular	√3	1	1	± 0.5 %	± 0.5 %
Probe Positioning	9.9	Rectangular	√3	1	1	± 5.7 %	± 5.7 %
Max. SAR Eval.	4.0	Rectangular	√3	1	1	± 2.3 %	± 2.3 %
Test Sample Related							
Device Positioning	2.9	Normal	1	1	1	± 2.9 %	± 2.9 %
Device Holder	3.6	Normal	1	1	1	± 3.6 %	± 3.6 %
Power Drift	5.0	Rectangular	√3	1	1	± 2.9 %	± 2.9 %
Phantom and Setup							
Phantom Uncertainty	4.0	Rectangular	√3	1	1	± 2.3 %	± 2.3 %
Liquid Conductivity (Target)	5.0	Rectangular	√3	0.64	0.43	± 1.8 %	± 1.2 %
Liquid Conductivity (Meas.)	2.5	Normal	1	0.64	0.43	± 1.6 %	± 1.1 %
Liquid Permittivity (Target)	5.0	Rectangular	√3	0.6	0.49	± 1.7 %	± 1.4 %
Liquid Permittivity (Meas.)	2.5	Normal	1	0.6	0.49	± 1.5 %	± 1.2 %
Combined Standard Uncertainty						± 12.8 %	± 12.6 %
Coverage Factor for 95 %						K=2	
Expanded Uncertainty						**± 25.6 %**	**± 25.2 %**

Table 18.3. Uncertainty Budget for frequency range 3 GHz to 6 GHz

19. References

[1] FCC 47 CFR Part 2 “Frequency Allocations and Radio Treaty Matters; General Rules and Regulations”.

[2] ANSI/IEEE Std. C95.1-1992, “IEEE Standard for Safety Levels with Respect to Human Exposure to Radio Frequency Electromagnetic Fields, 3 kHz to 300 GHz”, September 1992.

[3] IEEE Std. 1528-2003, “Recommended Practice for Determining the Peak Spatial-Average Specific Absorption Rate (SAR) in the Human Head from Wireless Communications Devices: Measurement Techniques”, December 2003.

[4] SPEAG DASY System Handbook.

[5] FCC KDB 865664 D01 v01r03 "SAR Measurement Requirements for 100 MHz to 6 GHz", February 2014.

[6] FCC KDB 865664 D02 v01r01, “RF Exposure Compliance Reporting and Documentation Considerations”, May 2013.

[7] FCC KDB 447498 D01 v05r02 General RF Exposure Guidance “Mobile and Portable Device RF Exposure Procedures and Equipment Authorization Policies”, February 2014.

[8] FCC KDB 248227 D01 v01r02, “SAR Measurement Procedures for 802.11 a/b/g Transmitters”, May 2007.

[9] FCC KDB 616217 D04 v01r01, “SAR Evaluation Considerations for Laptop, Notebook, Netbook and Tablet Computers”, May 2013.

[10] FCC KDB 941225 D01 3G SAR Procedures v03, “3G SAR measurement procedures”, October 2014.

[11] FCC KDB 941225 D05 v02r03, “SAR Evaluation Considerations for LTE Devices”, December 2013.

[12] FCC KDB 941225 D05A v01r01, “Rel. 10 LTE SAR Test Guidance and KDB Inquiries”, August 2014.

Appendix A. Plots of System Performance Check

The plots are shown as follows.

Test Laboratory: Sporton International Inc. SAR/HAC Testing Lab Date: 2015.01.09

System Check_Body_750MHz_150109

DUT: D750V3 - SN: 1012

Communication System: UID 0, CW; Frequency: 750 MHz;Duty Cycle: 1:1
Medium: MSL_750_150109 Medium parameters used: f = 750 MHz; σ = 0.971 S/m; ε_r = 54.634; ρ = 1000 kg/m^3
Ambient Temperature：23.5 ℃； Liquid Temperature：22.7 ℃

DASY5 Configuration:
- Probe: EX3DV4 - SN3819; ConvF(9.55, 9.55, 9.55); Calibrated: 2014.11.13;
- Sensor-Surface: 2mm (Mechanical Surface Detection)
- Electronics: DAE4 Sn910; Calibrated: 2014.07.22
- Phantom: SAM3; Type: QDOVA002AA; Serial: TP:1149
- Measurement SW: DASY52, Version 52.8 (7); SEMCAD X Version 14.6.10 (7164)

Pin=250mW/Area Scan (61x61x1): Interpolated grid: dx=15mm, dy=15mm
Maximum value of SAR (interpolated) = 2.85 W/kg

Pin=250mW/Zoom Scan (5x5x7)/Cube 0: Measurement grid: dx=8mm, dy=8mm, dz=5mm
Reference Value = 50.367 V/m; Power Drift = 0.01 dB
Peak SAR (extrapolated) = 3.28 W/kg
SAR(1 g) = 2.28 W/kg; SAR(10 g) = 1.54 W/kg
Maximum value of SAR (measured) = 2.83 W/kg

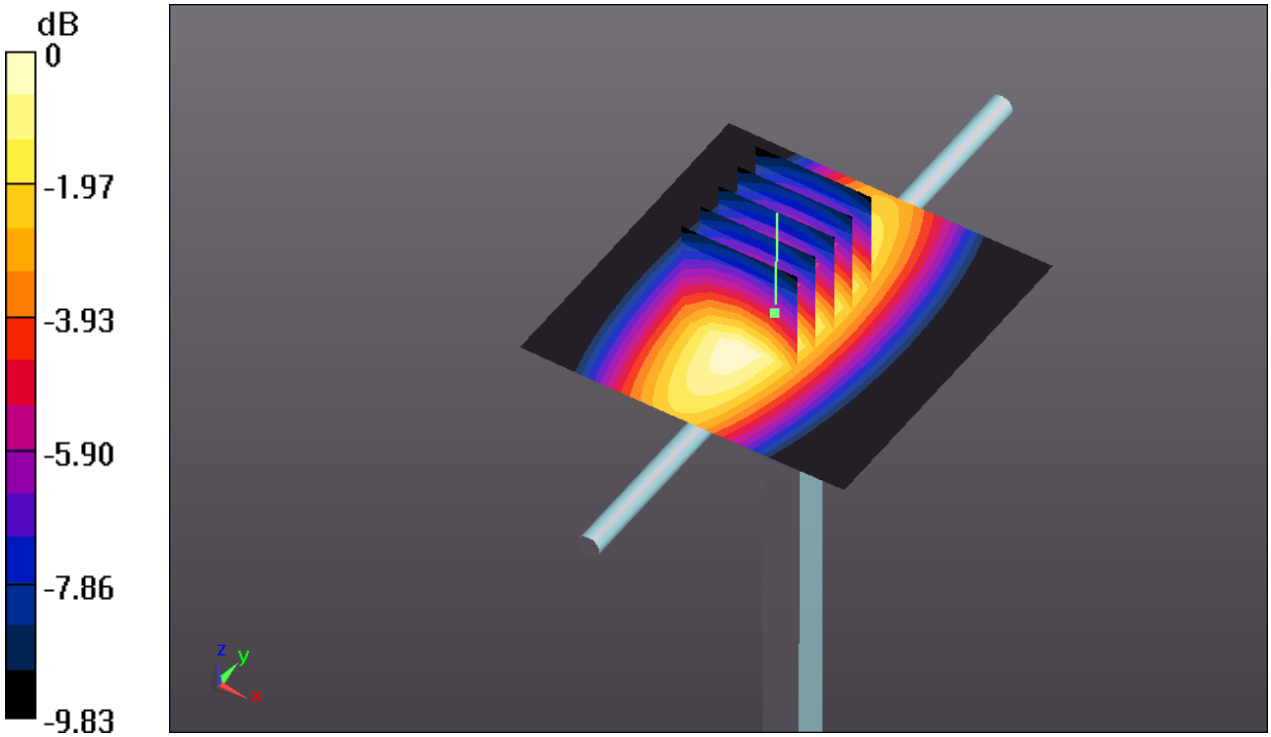

0 dB = 2.83 W/kg

Test Laboratory: Sporton International Inc. SAR/HAC Testing Lab Date: 2015.01.09

System Check_Body_835MHz_150109

DUT: D835V2 - SN: 4d151

Communication System: UID 0, CW; Frequency: 835 MHz;Duty Cycle: 1:1
Medium: MSL_835_150109 Medium parameters used: f = 835 MHz; σ = 0.972 S/m; ε_r = 53.975; ρ = 1000 kg/m^3
Ambient Temperature：23.5 ℃； Liquid Temperature：22.8 ℃

DASY5 Configuration:
- Probe: EX3DV4 - SN3819; ConvF(9.49, 9.49, 9.49); Calibrated: 2014.11.13;
- Sensor-Surface: 2mm (Mechanical Surface Detection)
- Electronics: DAE4 Sn910; Calibrated: 2014.07.22
- Phantom: SAM3; Type: QDOVA002AA; Serial: TP:1149
- Measurement SW: DASY52, Version 52.8 (7); SEMCAD X Version 14.6.10 (7164)

Pin=250mW/Area Scan (61x61x1): Interpolated grid: dx=15mm, dy=15mm
Maximum value of SAR (interpolated) = 2.64 W/kg

Pin=250mW/Zoom Scan (5x5x7)/Cube 0: Measurement grid: dx=8mm, dy=8mm, dz=5mm
Reference Value = 52.193 V/m; Power Drift = 0.04 dB
Peak SAR (extrapolated) = 3.57 W/kg
SAR(1 g) = 2.44 W/kg; SAR(10 g) = 1.62 W/kg
Maximum value of SAR (measured) = 2.63 W/kg

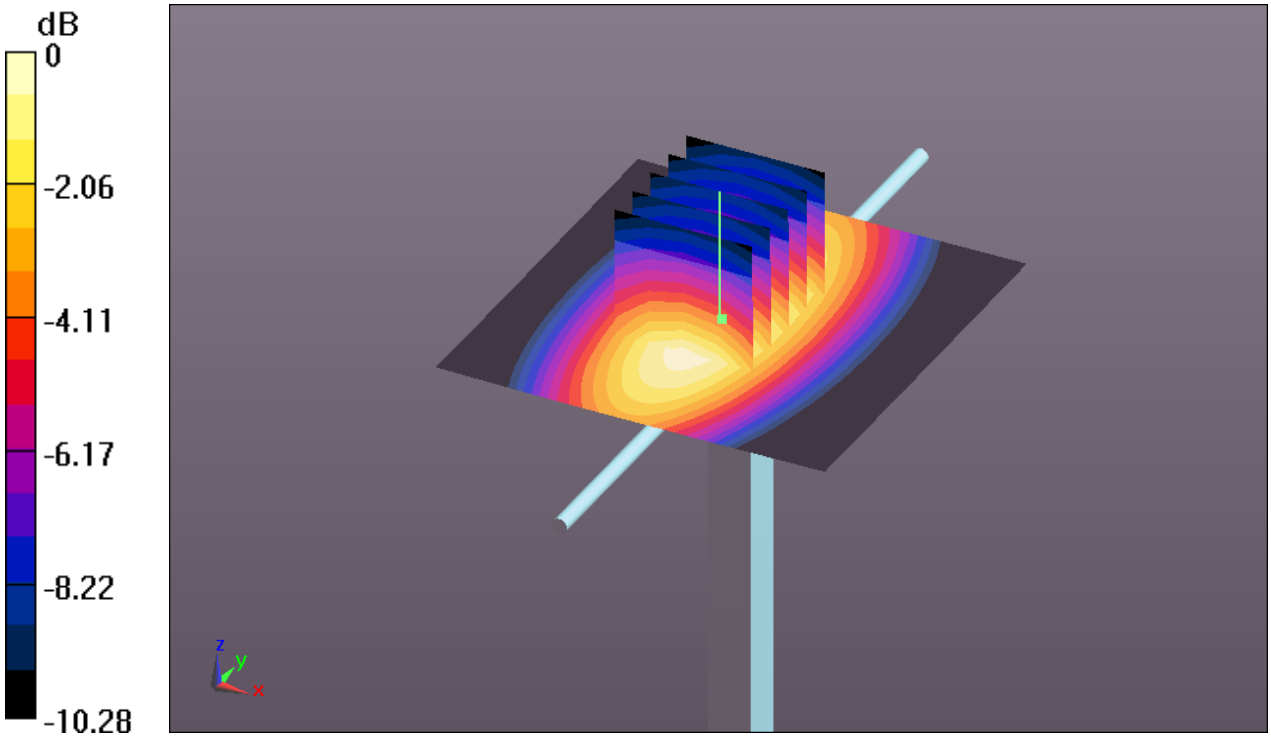

0 dB = 2.63 W/kg

Test Laboratory: Sporton International Inc. SAR/HAC Testing Lab Date: 2015.01.10

System Check_Body_1750MHz_150110

DUT: D1750V2 - SN: 1090

Communication System: UID 0, CW; Frequency: 1750 MHz;Duty Cycle: 1:1
Medium: MSL_1750_150110 Medium parameters used: f = 1750 MHz; σ = 1.527 S/m; ε_r = 51.995; ρ = 1000 kg/m^3
Ambient Temperature：23.2 ℃; Liquid Temperature：22.6 ℃

DASY5 Configuration:
- Probe: EX3DV4 - SN3819; ConvF(7.74, 7.74, 7.74); Calibrated: 2014.11.13;
- Sensor-Surface: 2mm (Mechanical Surface Detection)
- Electronics: DAE4 Sn910; Calibrated: 2014.07.22
- Phantom: SAM3; Type: QDOVA002AA; Serial: TP:1149
- Measurement SW: DASY52, Version 52.8 (7); SEMCAD X Version 14.6.10 (7164)

Pin=250mW/Area Scan (61x61x1): Interpolated grid: dx=15mm, dy=15mm
Maximum value of SAR (interpolated) = 14.5 W/kg

Pin=250mW/Zoom Scan (5x5x7)/Cube 0: Measurement grid: dx=8mm, dy=8mm, dz=5mm
Reference Value = 98.314 V/m; Power Drift = 0.02 dB
Peak SAR (extrapolated) = 18.0 W/kg
SAR(1 g) = 10.3 W/kg; SAR(10 g) = 5.5 W/kg
Maximum value of SAR (measured) = 14.4 W/kg

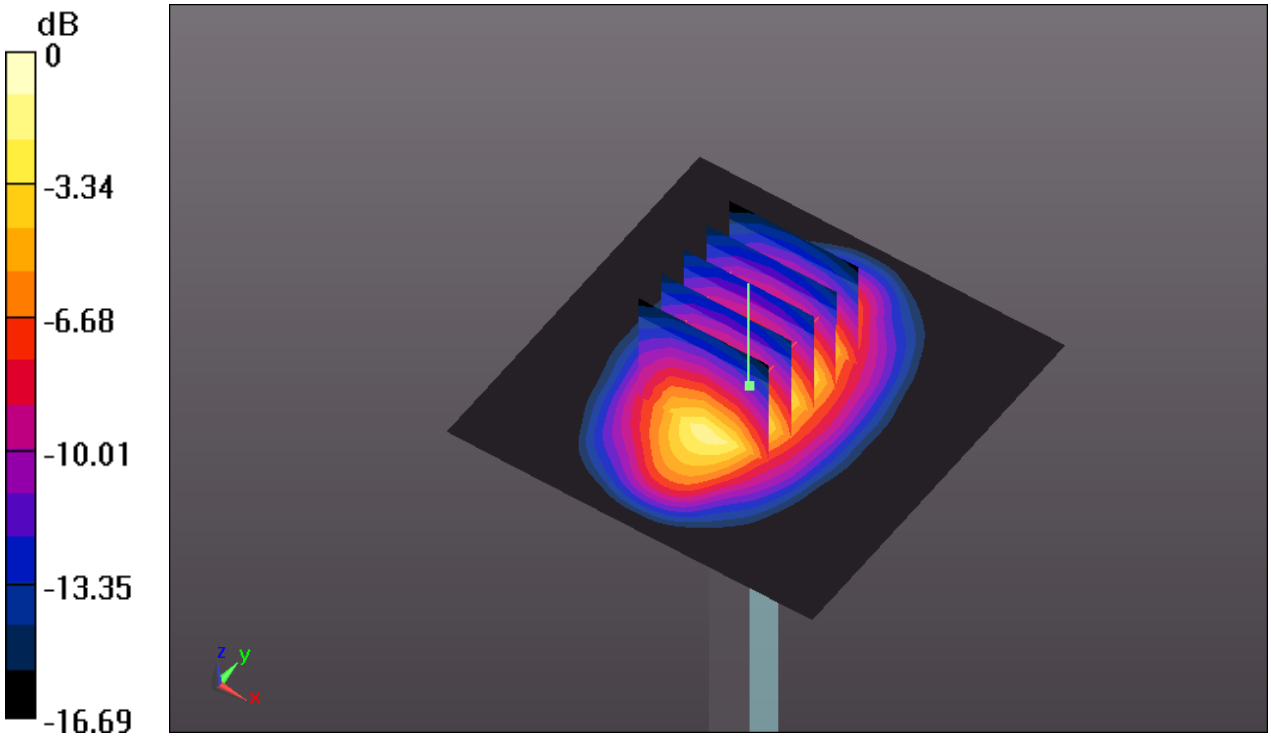

0 dB = 14.4 W/kg

Test Laboratory: Sporton International Inc. SAR/HAC Testing Lab Date: 2015.01.10

System Check_Body_1900MHz_150110

DUT: D1900V2 - SN: 5d170

Communication System: UID 0, CW; Frequency: 1900 MHz;Duty Cycle: 1:1
Medium: MSL_1900_150110 Medium parameters used: f = 1900 MHz; σ = 1.538 S/m; ε_r = 53.79; ρ = 1000 kg/m^3
Ambient Temperature：23.3 ℃; Liquid Temperature：22.6 ℃

DASY5 Configuration:
- Probe: EX3DV4 - SN3819; ConvF(7.39, 7.39, 7.39); Calibrated: 2014.11.13;
- Sensor-Surface: 2mm (Mechanical Surface Detection)
- Electronics: DAE4 Sn910; Calibrated: 2014.07.22
- Phantom: SAM3; Type: QDOVA002AA; Serial: TP:1149
- Measurement SW: DASY52, Version 52.8 (7); SEMCAD X Version 14.6.10 (7164)

Pin=250mW/Area Scan (61x61x1): Interpolated grid: dx=15mm, dy=15mm
Maximum value of SAR (interpolated) = 15.8 W/kg

Pin=250mW/Zoom Scan (5x5x7)/Cube 0: Measurement grid: dx=8mm, dy=8mm, dz=5mm
Reference Value = 89.833 V/m; Power Drift = 0.02 dB
Peak SAR (extrapolated) = 19.6 W/kg
SAR(1 g) = 11 W/kg; SAR(10 g) = 5.75 W/kg
Maximum value of SAR (measured) = 15.4 W/kg

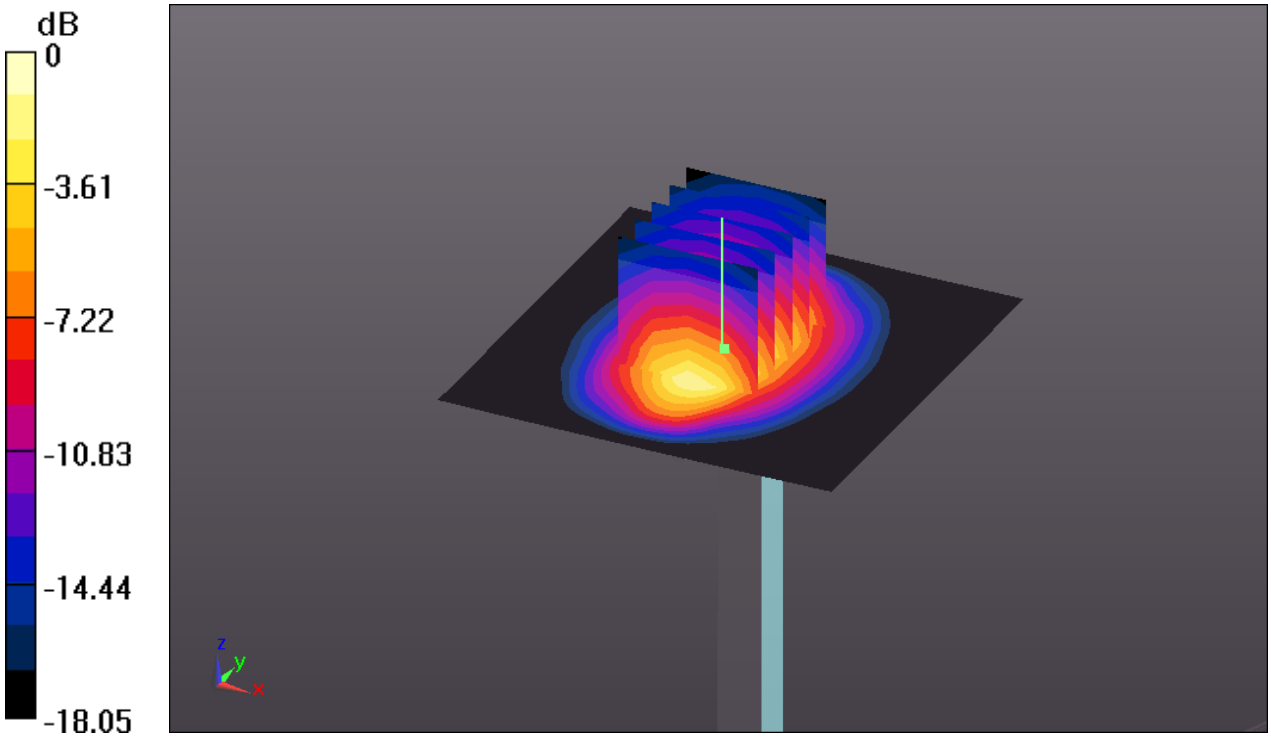

0 dB = 15.4 W/kg

Test Laboratory: Sporton International Inc. SAR/HAC Testing Lab Date: 2015.01.18

System Check_Body_2450MHz_150118

DUT: D2450V2 - SN: 908

Communication System: UID 0, CW; Frequency: 2450 MHz;Duty Cycle: 1:1
Medium: MSL_2450_150118 Medium parameters used: f = 2450 MHz; σ = 1.991 S/m; ε_r = 52.32; ρ = 1000 kg/m^3
Ambient Temperature：23.3 ℃; Liquid Temperature：22.7 ℃

DASY5 Configuration:
- Probe: EX3DV4 - SN3819; ConvF(6.95, 6.95, 6.95); Calibrated: 2014.11.13;
- Sensor-Surface: 2mm (Mechanical Surface Detection)
- Electronics: DAE4 Sn910; Calibrated: 2014.07.22
- Phantom: SAM3; Type: QDOVA002AA; Serial: TP:1149
- Measurement SW: DASY52, Version 52.8 (7); SEMCAD X Version 14.6.10 (7164)

Pin=250mW/Area Scan (81x81x1): Interpolated grid: dx=12mm, dy=12mm
Maximum value of SAR (interpolated) = 18.4 W/kg

Pin=250mW/Zoom Scan (7x7x7)/Cube 0: Measurement grid: dx=5mm, dy=5mm, dz=5mm
Reference Value = 78.741 V/m; Power Drift = 0.67 dB
Peak SAR (extrapolated) = 25.5 W/kg
SAR(1 g) = 12.3 W/kg; SAR(10 g) = 5.85 W/kg
Maximum value of SAR (measured) = 18.7 W/kg

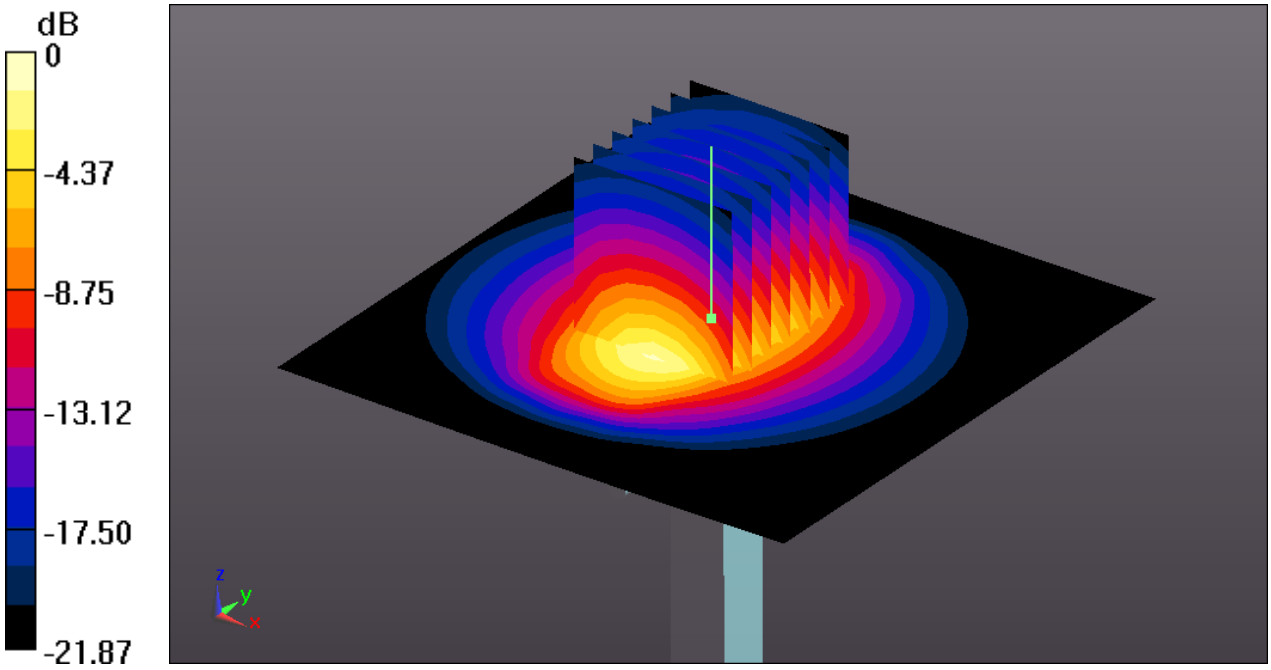

0 dB = 18.7 W/kg

Test Laboratory: Sporton International Inc. SAR/HAC Testing Lab Date: 2015.01.11

System Check_Body_2600MHz_150111

DUT: D2450V2 - SN: 1061

Communication System: UID 0, CW; Frequency: 2600 MHz;Duty Cycle: 1:1
Medium: MSL_2600_150111 Medium parameters used: f = 2600 MHz; σ = 2.209 S/m; ε_r = 51.123; ρ = 1000 kg/m^3
Ambient Temperature：23.5 ℃; Liquid Temperature：22.6 ℃

DASY5 Configuration:
- Probe: EX3DV4 - SN3819; ConvF(6.8, 6.8, 6.8); Calibrated: 2014.11.13;
- Sensor-Surface: 2mm (Mechanical Surface Detection)
- Electronics: DAE4 Sn910; Calibrated: 2014.07.22
- Phantom: SAM3; Type: QDOVA002AA; Serial: TP:1149
- Measurement SW: DASY52, Version 52.8 (7); SEMCAD X Version 14.6.10 (7164)

Pin=250mW/Area Scan (61x61x1): Interpolated grid: dx=12mm, dy=12mm
Maximum value of SAR (interpolated) = 21.6 W/kg

Pin=250mW/Zoom Scan (7x7x7)/Cube 0: Measurement grid: dx=5mm, dy=5mm, dz=5mm
Reference Value = 100.9 V/m; Power Drift = 0.08 dB
Peak SAR (extrapolated) = 29.1 W/kg
SAR(1 g) = 14 W/kg; SAR(10 g) = 6.28 W/kg
Maximum value of SAR (measured) = 21.6 W/kg

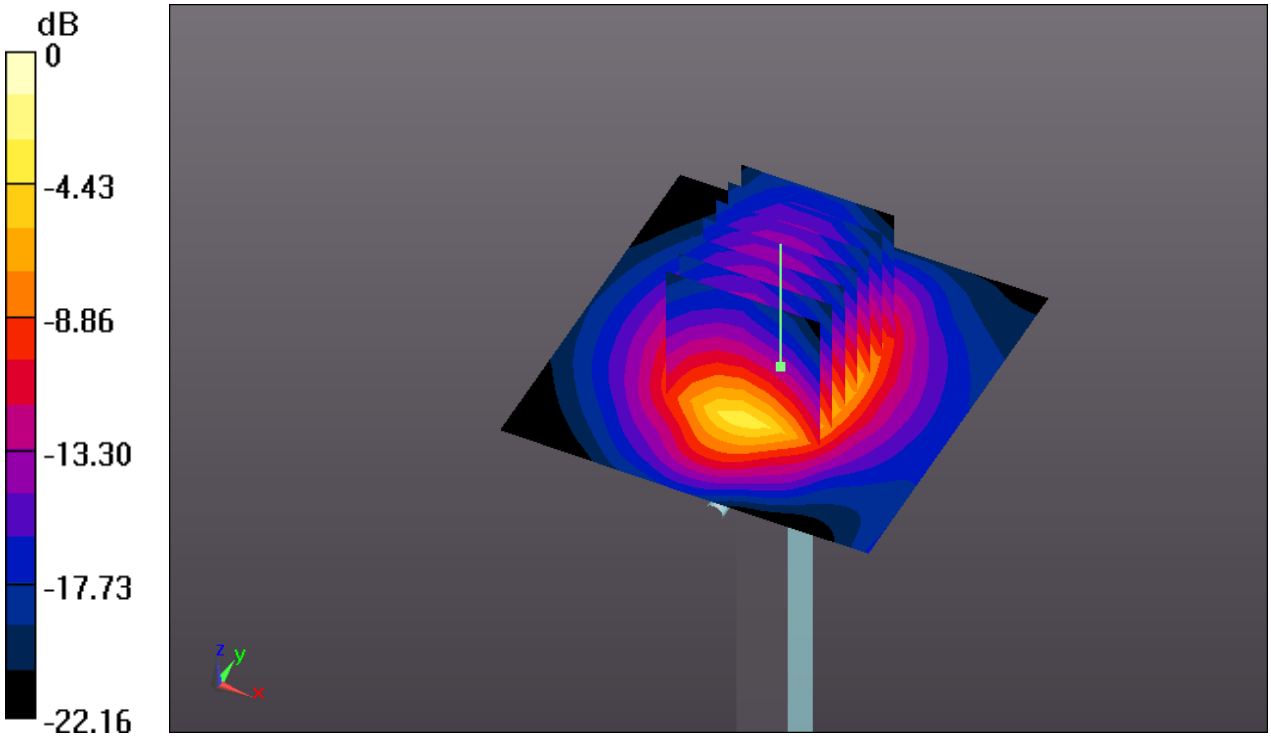

0 dB = 21.6 W/kg

Test Laboratory: Sporton International Inc. SAR/HAC Testing Lab Date: 2015.01.20

System Check_Body_5200MHz_150120

DUT: D5GHzV2 - SN: 1128

Communication System: UID 0, CW; Frequency: 5200 MHz;Duty Cycle: 1:1
Medium: MSL_5200_150120 Medium parameters used: f = 5200 MHz; σ = 5.137 S/m; ε_r = 48.164; ρ = 1000 kg/m^3
Ambient Temperature：23.3 ℃; Liquid Temperature：22.7 ℃

DASY5 Configuration:
- Probe: EX3DV4 - SN3819; ConvF(4.52, 4.52, 4.52); Calibrated: 2014.11.13;
- Sensor-Surface: 1.4mm (Mechanical Surface Detection)
- Electronics: DAE4 Sn910; Calibrated: 2014.07.22
- Phantom: SAM3; Type: QDOVA002AA; Serial: TP:1149
- Measurement SW: DASY52, Version 52.8 (7); SEMCAD X Version 14.6.10 (7164)

Pin=100mW/Area Scan (71x71x1): Interpolated grid: dx=10mm, dy=10mm
Maximum value of SAR (interpolated) = 19.5 W/kg

Pin=100mW/Zoom Scan (7x7x7)/Cube 0: Measurement grid: dx=4mm, dy=4mm, dz=1.4mm
Reference Value = 50.079 V/m; Power Drift = 0.08 dB
Peak SAR (extrapolated) = 33.7 W/kg
SAR(1 g) = 8.17 W/kg; SAR(10 g) = 2.23 W/kg
Maximum value of SAR (measured) = 20.2 W/kg

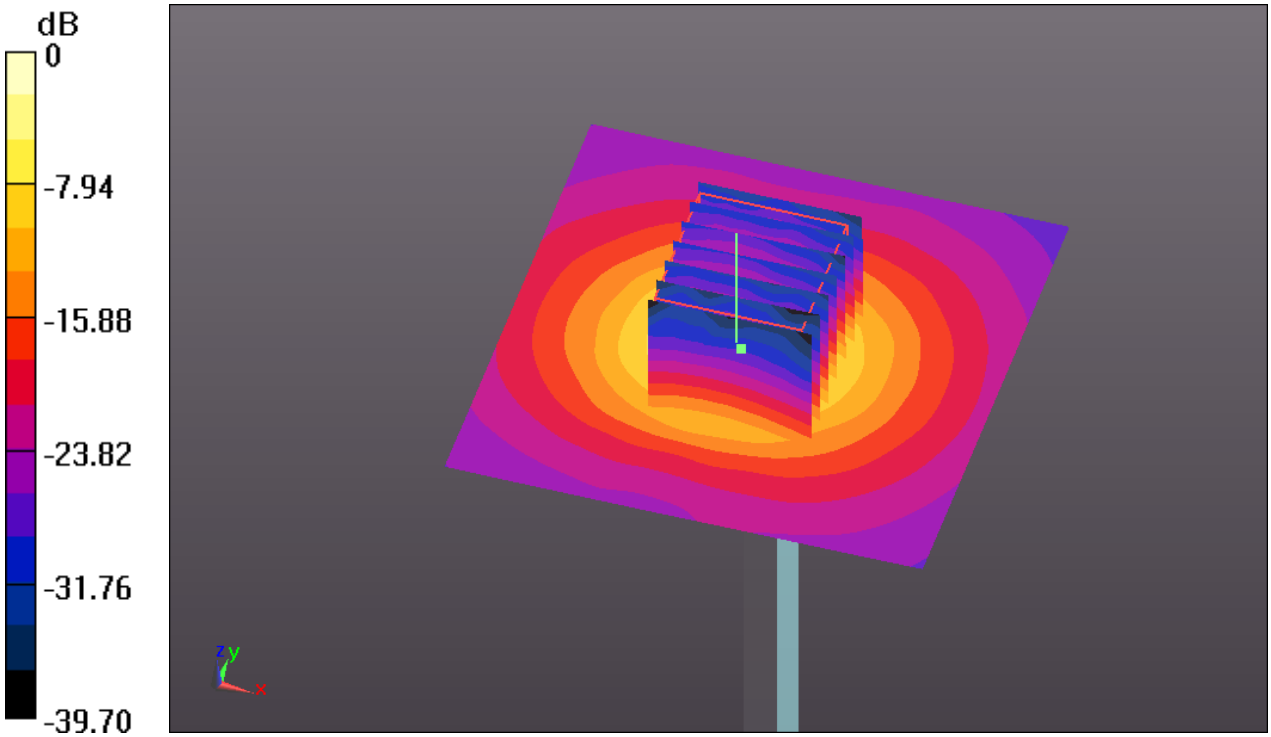

0 dB = 20.2 W/kg

Test Laboratory: Sporton International Inc. SAR/HAC Testing Lab Date: 2015.01.20

System Check_Body_5300MHz_150120

DUT: D5GHzV2 - SN: 1128

Communication System: UID 0, CW (0); Frequency: 5300 MHz;Duty Cycle: 1:1
Medium: MSL_5300_150120 Medium parameters used: f = 5300 MHz; σ = 5.251 S/m; ε_r = 47.988; ρ = 1000 kg/m^3
Ambient Temperature：23.5 ℃; Liquid Temperature：22.7 ℃

DASY5 Configuration:
- Probe: EX3DV4 - SN3819; ConvF(4.37, 4.37, 4.37); Calibrated: 2014.11.13;
- Sensor-Surface: 1.4mm (Mechanical Surface Detection)
- Electronics: DAE4 Sn910; Calibrated: 2014.07.22
- Phantom: SAM3; Type: QDOVA002AA; Serial: TP:1149
- Measurement SW: DASY52, Version 52.8 (7); SEMCAD X Version 14.6.10 (7164)

Pin=100mW/Area Scan (71x71x1): Interpolated grid: dx=10mm, dy=10mm
Maximum value of SAR (interpolated) = 17.4 W/kg

Pin=100mW/Zoom Scan (7x7x7)/Cube 0: Measurement grid: dx=4mm, dy=4mm, dz=1.4mm
Reference Value = 45.438 V/m; Power Drift = 0.06 dB
Peak SAR (extrapolated) = 31.6 W/kg
SAR(1 g) = 7.45 W/kg; SAR(10 g) = 1.92 W/kg
Maximum value of SAR (measured) = 17.9 W/kg

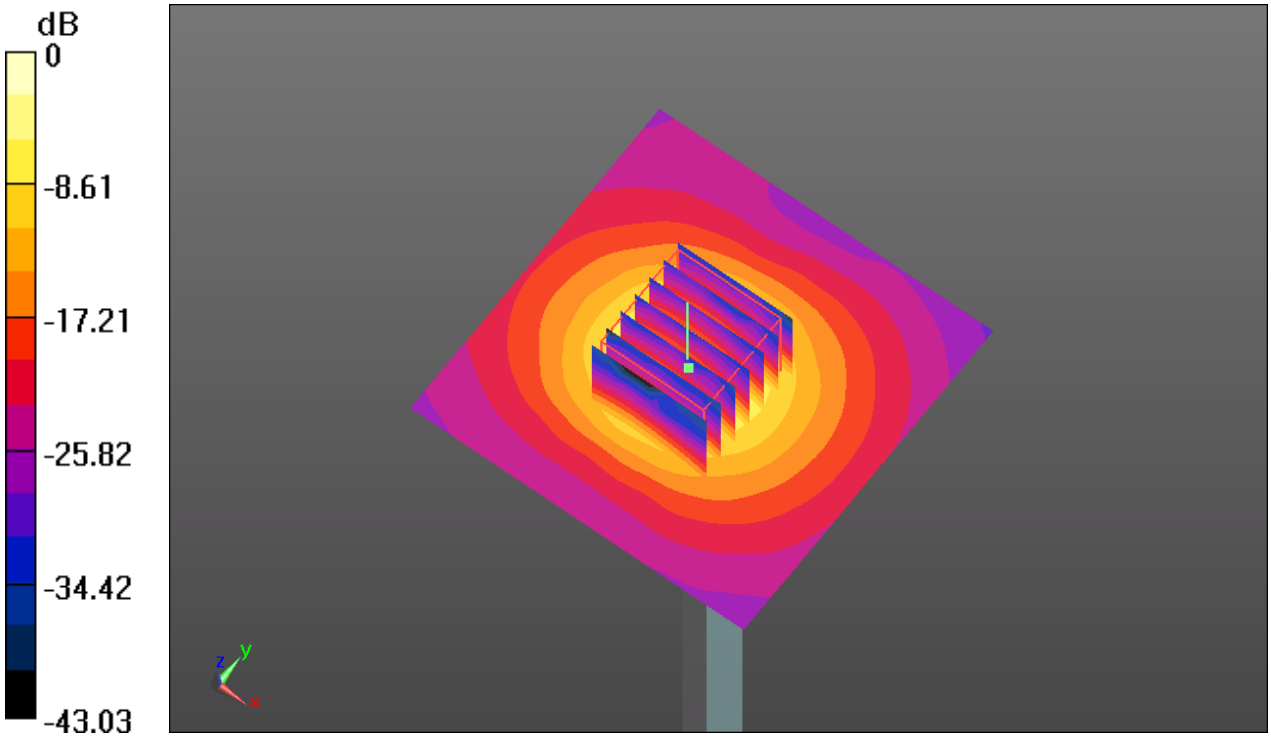

0 dB = 17.9 W/kg

Test Laboratory: Sporton International Inc. SAR/HAC Testing Lab Date: 2015.01.20

System Check_Body_5600MHz_150120

DUT: D5GHzV2 - SN: 1128

Communication System: UID 0, CW (0); Frequency: 5600 MHz;Duty Cycle: 1:1
Medium: MSL_5600_150120 Medium parameters used: f = 5600 MHz; σ = 5.644 S/m; ε_r = 47.452; ρ = 1000 kg/m^3
Ambient Temperature：23.4 ℃; Liquid Temperature：22.8 ℃

DASY5 Configuration:
- Probe: EX3DV4 - SN3819; ConvF(3.86, 3.86, 3.86); Calibrated: 2014.11.13;
- Sensor-Surface: 1.4mm (Mechanical Surface Detection)
- Electronics: DAE4 Sn910; Calibrated: 2014.07.22
- Phantom: SAM3; Type: QDOVA002AA; Serial: TP:1149
- Measurement SW: DASY52, Version 52.8 (7); SEMCAD X Version 14.6.10 (7164)

Pin=100mW/Area Scan (71x71x1): Interpolated grid: dx=10mm, dy=10mm
Maximum value of SAR (interpolated) = 20.5 W/kg

Pin=100mW/Zoom Scan (7x7x7)/Cube 0: Measurement grid: dx=4mm, dy=4mm, dz=1.4mm
Reference Value = 47.799 V/m; Power Drift = 0.08 dB
Peak SAR (extrapolated) = 35.8 W/kg
SAR(1 g) = 8.28 W/kg; SAR(10 g) = 2.25 W/kg
Maximum value of SAR (measured) = 20.9 W/kg

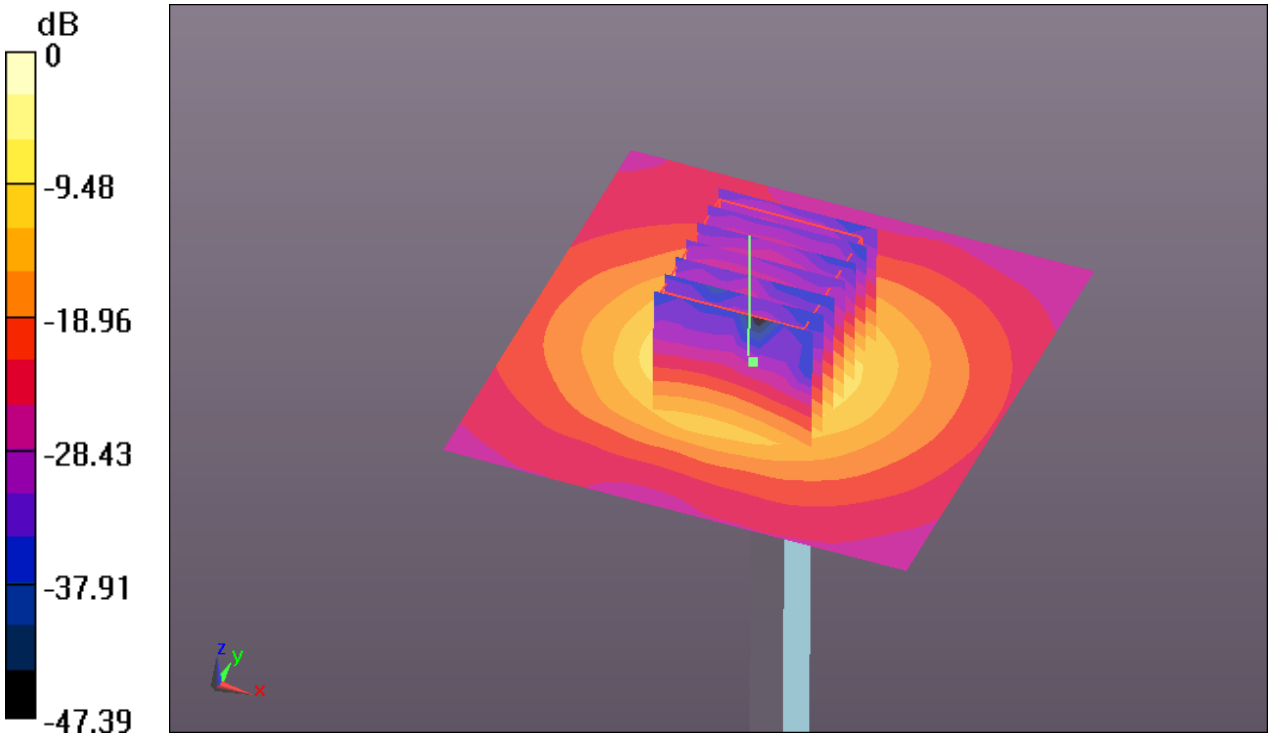

0 dB = 20.9 W/kg

Appendix B. Plots of SAR Measurement

The plots are shown as follows.