Hearing Aid Compatibility (HAC) RF Emissions Test Report

APPLICANT	:	TCL Communication Ltd.
EQUIPMENT	:	Tablet PC
BRAND NAME	:	ALCATEL ONETOUCH
MODEL NAME	:	9002W
MARKETING NAME	:	ALCATEL ONETOUCH PIXI 3 (7)
FCC ID	:	2ACCJB040
STANDARD	:	FCC 47 CFR §20.19 ANSI C63.19-2011

We, SPORTON INTERNATIONAL (SHENZHEN) INC., would like to declare that the tested sample has been evaluated in accordance with the procedures and had been in compliance with the applicable technical standards.

The test results in this report apply exclusively to the tested model / sample. Without written approval of SPORTON INTERNATIONAL (SHENZHEN) INC., the test report shall not be reproduced except in full.

Prepared by: Mark Qu / Manager

Approved by: Jones Tsai / Manager

Testing Laboratory
2353

SPORTON INTERNATIONAL (SHENZHEN) INC.
1F & 2F, Building A, Morning Business Center, No. 4003 ShiGu Rd., Xili Town, Nanshan District, Shenzhen, Guangdong, P. R. China

Table of Contents

1. Attestation of Test Results 4
2. Administration Data 4
3. Equipment Under Test Information 5
3.1 General Information 5
3.2 Air Interface and Operating Mode 6
3.3 Applied Standards 6
4. HAC RF Emission 7
5. Measurement System Specification 8
5.1 Test Arch Phantom 8
5.2 E-Field Probe System 9
E-Field Probe Specification 9
Probe Tip Description: 9
5.3 System Hardware 9
5.4 Data Storage and Evaluation 10
5.5 Test Equipment List 11
6. Measurement System Validation 12
6.1 Purpose of System Performance Check 12
6.2 System Setup 12
6.3 Verification Results 13
7. RF Emissions Test Procedure 14
8. Modulation Interference Factor 17
9. Low-power Exemption 19
10. Conducted RF Output Power (Unit: dBm) 20
11. HAC RF Emission Test Results 20
12. Uncertainty Assessment 21
13. References 23

Appendix A. Plots of System Performance Check
Appendix B. Plots of RF Emission Measurement
Appendix C. DASY Calibration Certificate
Appendix D. Test Setup Photos

Revision History

REPORT NO.	VERSION	DESCRIPTION	ISSUED DATE
HA532002-03	Rev. 01	Initial issue of report	Dec. 21, 2015

1. Attestation of Test Results

Applicant Name	TCL Communication Ltd.
Equipment Name	Tablet PC
Brand Name	ALCATEL ONETOUCH
Model Name	9002W
Marketing Name	ALCATEL ONETOUCH PIXI 3 (7)
FCC ID	2ACCJB040
IMEI Code	014472000882675
HW Version	V03
SW Version	BFO
EUT Stage	Production Unit
HAC Rating	M3
Date Tested	2015/11/23
Test Result	Pass

This device is compliance with HAC limits specified in guidelines FCC 47 CFR §20.19 and ANSI Standard ANSI C63.19.

2. Administration Data

Testing Laboratory	
Test Site	SPORTON INTERNATIONAL (SHENZHEN) INC.
Test Site Location	1F & 2F,Building A, Morning Business Center, No. 4003 ShiGu Rd., Xili Town, Nanshan District, Shenzhen, Guangdong, P. R. China TEL: +86-755-8637-9589 FAX: +86-755-8637-9595
Test Site No.	Sporton Site No. : **SAR01-SZ**
Applicant	
Company Name	TCL Communication Ltd.
Address	5F, C-Tower, No. 232, Liang Jing Road, ZhangJiang High-Tech Park, Pudong Area, Shanghai, 201203, P. R. China
Manufacturer	
Company Name	TCL Communication Ltd.
Address	5F, C-Tower, No. 232, Liang Jing Road, ZhangJiang High-Tech Park, Pudong Area, Shanghai, 201203, P. R. China

3. Equipment Under Test Information

3.1 General Information

Product Feature & Specification	
Frequency Band	GSM850: 824.2 MHz ~ 848.8 MHz GSM1900: 1850.2 MHz ~ 1909.8 MHz WCDMA Band II: 1852.4 MHz ~ 1907.6 MHz WCDMA Band IV: 1712.4 MHz ~ 1752.6 MHz WCDMA Band V: 826.4 MHz ~ 846.6 MHz WLAN 2.4GHz Band: 2412 MHz ~ 2462 MHz Bluetooth: 2402 MHz ~ 2480 MHz
Mode	• GSM/GPRS/EGPRS • AMR / RMC 12.2Kbps • HSDPA • HSUPA • HSPA+ (16QAM uplink is not supported) • 802.11b/g/n HT20/HT40 • Bluetooth v3.0+EDR, Bluetooth v4.0 LE

3.2 Air Interface and Operating Mode

Air Interface	Band MHz	Type	C63.19 Tested	Simultaneous Transmitter	OTT	Power Reduction
GSM	850	VO	Yes	WLAN, BT	NA	Yes
	1900			WLAN, BT	NA	Yes
	GPRS/EDGE	DT	No	WLAN, BT	Yes	Yes
WCDMA	Band II	VO	No(1)	WLAN, BT	NA	Yes
	Band VI			WLAN, BT	NA	Yes
	Band V			WLAN, BT	NA	Yes
	HSPA	DT	No	WLAN, BT	Yes	Yes
WLAN	2450	VD	No(2)	GSM, WCDMA	Yes	No
BT	2450	DT	No	GSM, WCDMA	NA	No

VO=CMRS Voice Service
DT=Digital Transport
VD=CMRS IP Voice Service and Digital Transport

Remark:
1. WCDMA is exempted from testing by low power exemption that its average antenna input power plus its MIF is ≤17 dBm, and is rated as M4
2. For 2.4GHz WLAN RF emissions testing exemption shall be applied to an RF air interface technology in a device whose Peak antenna input power, averaged over intervals ≤50 μs, is ≤23 dBm.

3.3 Applied Standards

- FCC CFR47 Part 20.19
- ANSI C63.19 2011-version
- FCC KDB 285076 D01 HAC Guidance v04
- FCC KDB 285076 D02 T Coil testing for CMRS IP v01r01

4. HAC RF Emission

FCC wireless hearing aid compatibility rules ensure that consumers with hearing loss are able to access wireless communications services through a wide selection of handsets without experiencing disabling radio frequency (RF) interference or other technical obstacles.

To define and measure the hearing aid compatibility of handsets, in CFR47 part 20.19 ANSI C63.19 is referenced. A handset is considered hearing aid-compatible for acoustic coupling if it meets a rating of at least M3 under ANSI C63.19, and A handset is considered hearing aid compatible for inductive coupling if it meets a rating of at least T3.

According to ANSI C63.19 2011 version, for acoustic coupling, the RF electric field emissions of wireless communication devices should be measured and rated according to the emission level as below.

Emission Categories	E-field emissions	
	<960Mhz	>960Mhz
M1	50 to 55 dB (V/m)	40 to 45 dB (V/m)
M2	45 to 50 dB (V/m)	35 to 40 dB (V/m)
M3	40 to 45 dB (V/m)	30 to 35 dB (V/m)
M4	<40 dB (V/m)	<30 dB (V/m)

Table 4.1 Telephone near-field categories in linear units

5. Measurement System Specification

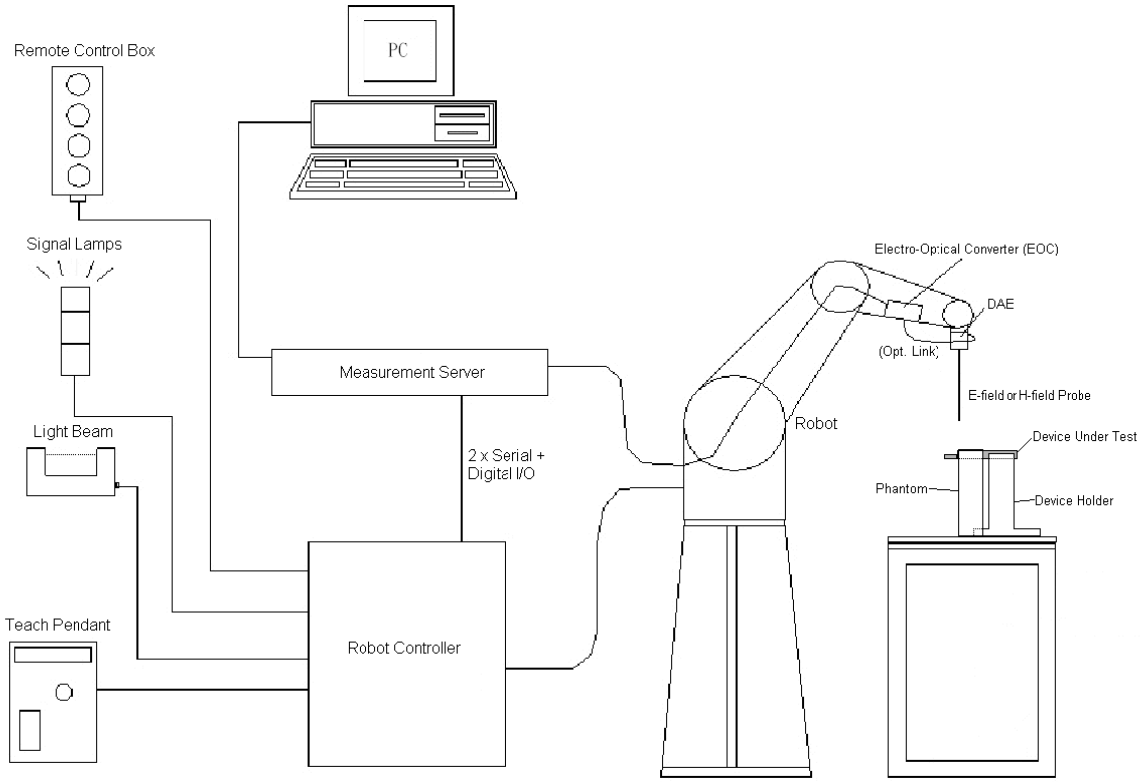

Fig 5.1 SPEAG DASY5 System Configurations

5.1 Test Arch Phantom

Construction :	Enables easy and well defined positioning of the phone and validation dipoles as well as simple teaching of the robot.	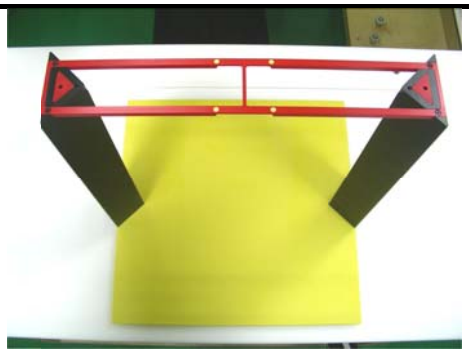
Dimensions :	370 x 370 x 370 mm	**Fig 5.8 Photo of Arch Phantom**

5.2 E-Field Probe System

E-Field Probe Specification
<ER3DV6>

Construction	One dipole parallel, two dipoles normal to probe axis Built-in shielding against static charges
Calibration	In air from 100 MHz to 3.0 GHz (absolute accuracy ±6.0%, k=2)
Frequency	100 MHz to 6 GHz; Linearity: ± 2.0 dB (100 MHz to 3 GHz)
Directivity	± 0.2 dB in air (rotation around probe axis) ± 0.4 dB in air (rotation normal to probe axis)
Dynamic Range	2 V/m to 1000 V/m (M3 or better device readings fall well below diode compression point)
Linearity	± 0.2 dB
Dimensions	Overall length: 330 mm (Tip: 16 mm) Tip diameter: 8 mm (Body: 12 mm) Distance from probe tip to dipole centers: 2.5 mm

Fig 5.2 Photo of E-field Probe

Probe Tip Description:

HAC field measurements take place in the close near field with high gradients. Increasing the measuring distance from the source will generally decrease the measured field values (in case of the validation dipole approx. 10%per mm).

5.3 System Hardware

DAE
The data acquisition electronics (DAE) consists of a highly sensitive electrometer-grade preamplifier with auto-zeroing, a channel and gain-switching multiplexer, a fast 16 bit AD-converter and a command decoder and control logic unit.
Robot
The SPEAG DASY system uses the high precision robots (DASY5: TX90XL) type from Stäubli SA (France). For the 6-axis controller system, the robot controller version (DASY5: CS8c) from Stäubli is used.

5.4 Data Storage and Evaluation

The DASY software stores the assessed data from the data acquisition electronics as raw data (in microvolt readings from the probe sensors), together with all the necessary software parameters for the data evaluation (probe calibration data, and device frequency and modulation data) in measurement files.

Probe parameters：	- Sensitivity	$Norm_i$, a_{i0}, a_{i1}, a_{i2}
	- Conversion factor	$ConvF_i$
	- Diode compression point	dcp_i
Device parameters：	- Frequency	f
	- Crest factor	cf
Media parameters：	- Conductivity	σ
	- Density	ρ

The formula for each channel can be given as：

$$\mathbf{V_i = U_i + U_i^2 \cdot \frac{cf}{dcp_i}}$$

with V_i = compensated signal of channel i, (i = x, y, z)
U_i = input signal of channel i, (i = x, y, z)
cf = crest factor of exciting field (DASY parameter)
dcp_i = diode compression point (DASY parameter)

From the compensated input signals, the primary field data for each channel can be evaluated：

E-field Probes：$\mathbf{E_i = \sqrt{\frac{V_i}{Norm_i \cdot ConvF}}}$

with V_i = compensated signal of channel i, (i = x, y, z)
$Norm_i$ = sensor sensitivity of channel i, (i = x, y, z), μV/(V/m)^2 for E-field Probes
ConvF = sensitivity enhancement in solution
f = carrier frequency [GHz]
E_i = electric field strength of channel i in V/m

The RSS value of the field components gives the total field strength (Hermitian magnitude)：

$$\mathbf{E_{tot} = \sqrt{E_x^2 + E_y^2 + E_z^2}}$$

The primary field data are used to calculate the derived field units.

5.5 Test Equipment List

Manufacturer	Name of Equipment	Type/Model	Serial Number	Calibration	
				Last Cal.	Due Date
SPEAG	Dipole	CD835V3	1184	Apr. 22, 2015	Apr. 21, 2016
SPEAG	Dipole	CD1880V3	1170	Apr. 22, 2015	Apr. 21, 2016
SPEAG	Data Acquisition Electronics	DAE4	1490	Sep. 14, 2015	Sep. 13, 2016
SPEAG	Prober	ER3DV6	2528	Mar. 24, 2015	Mar. 23, 2016
SPEAG	Test Arch Phantom	Par phantom	1105	NCR	NCR
SPEAG	Phone Positioner	N/A	N/A	NCR	NCR
Agilent	Base Station	E5515C	MY50267224	Aug. 07, 2015	Aug. 06, 2016
AR	Amplifier	5S1G4	333096	NCR	NCR
Anritsu	Power Sensor	MA2411B	1207253	Jan. 28, 2015	Jan. 27, 2016
Anritsu	Power Meter	ML2495A	1218010	Jan. 28, 2015	Jan. 27, 2016
Anritsu	Power Senor	MA2411B	917070	Jan. 23, 2015	Jan. 22, 2016
Anritsu	Power Meter	ML2495A	1005002	Jan. 23, 2015	Jan. 22, 2016
R&S	Spectrum Analyzer	FSP7	101634	Aug. 07, 2015	Aug. 06, 2016
Agilent	Dual Directional Coupler	778D	50422	NA	NA
MCL	Attenuation1	BW-S10W5	N/A	NA	NA
Weinschel	Attenuation2	3M-20	N/A	NA	NA
Zhongjilianhe	Attenuation3	MVE2214-03	N/A	NA	NA

Table 5.1 Test Equipment List

Note:

1. NCR: “No-Calibration Required”

6. Measurement System Validation

Each DASY system is equipped with one or more system validation kits. These units, together with the predefined measurement procedures within the DASY software, enable the user to conduct the system performance check and system validation. System validation kit includes a dipole, tripod holder to fix it underneath the test Arch and a corresponding distance holder.

6.1 Purpose of System Performance Check

The system performance check verifies that the system operates within its specifications. System and operator errors can be detected and corrected. It is recommended that the system performance check be performed prior to any usage of the system in order to guarantee reproducible results. The system performance check uses normal HAC measurements in a simplified setup with a well characterized source. This setup was selected to give a high sensitivity to all parameters that might fail or vary over time. The system check does not intend to replace the calibration of the components, but indicates situations where the system uncertainty is exceeded due to drift or failure.

6.2 System Setup

1. In the simplified setup for system evaluation, the EUT is replaced by a calibrated dipole and the power source is replaced by a continuous wave which comes from a signal generator.
2. The center point of the probe element(s) is 15mm from the closest surface of the dipole elements.
3. The calibrated dipole must be placed beneath the arch phantom. The equipment setup is shown below:

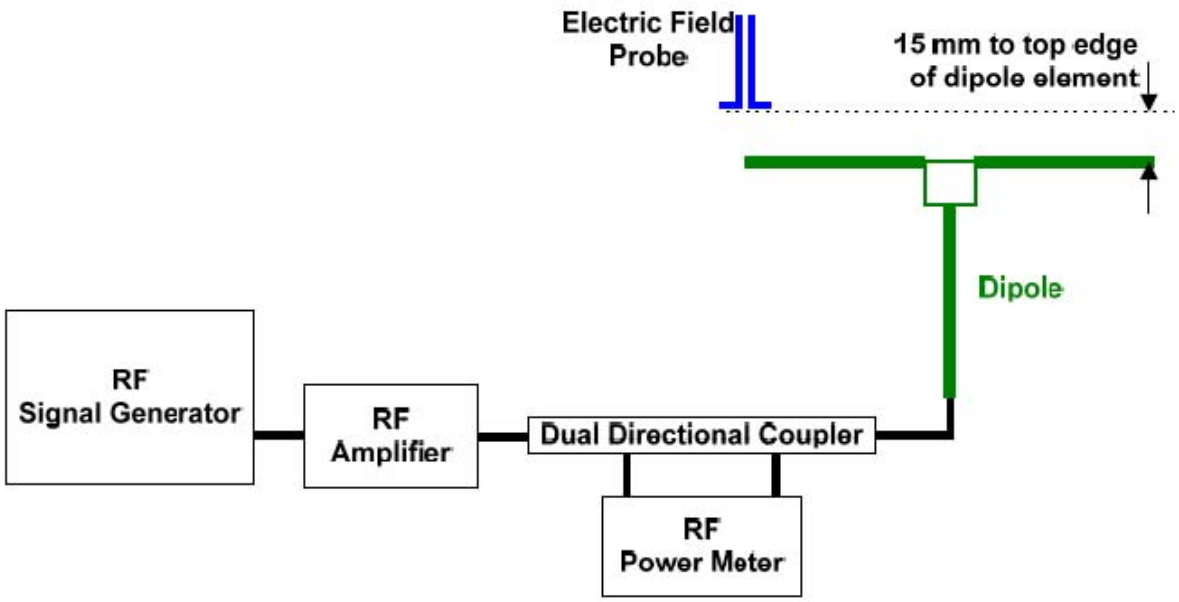

Fig. 6.1 System Validation Setup

The output power on dipole port must be calibrated to 20dBm (100mW) before dipole is connected.

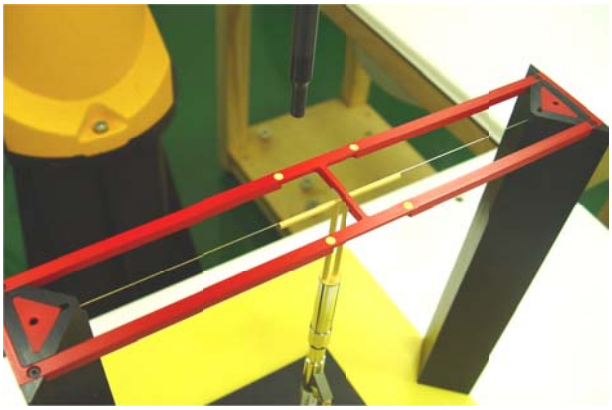

Fig 7.2 Dipole Setup

6.3 Verification Results

Comparing to the original E-field value provided by SPEAG, the verification data should be within its specification of 25 %. Table 6.1 shows the target value and measured value. The table below indicates the system performance check can meet the variation criterion and the plots can be referred to appendix A of this report.

Frequency (MHz)	Input Power (dBm)	Target Value (V/m)	E-Field above high end (V/m)	E-Field above low end (V/m)	Average Value (V/m)	Deviation (%)	Date
835	20	106.5	113.2	113.7	113.45	6.53	Nov. 23, 2015
1880	20	88.7	91.8	96.14	93.97	5.94	Nov. 23, 2015

Table 6.1 Test Results of System Validation

Note: Deviation = ((Average E-field Value) - (Target value)) / (Target value) * 100%

7. RF Emissions Test Procedure

Referenced from ANSI C63.19 -2011 section 5.5.1

a) Confirm the proper operation of the field probe, probe measurement system, and other instrumentation and the positioning system.

b) Position the WD in its intended test position.

c) Set the WD to transmit a fixed and repeatable combination of signal power and modulation characteristic that is representative of the worst case (highest interference potential) encountered in normal use. Transiently occurring start-up, changeover, or termination conditions, or other operations likely to occur less than 1% of the time during normal operation, may be excluded from consideration.

d) The center sub-grid shall be centered on the T-Coil mode perpendicular measurement point or the acoustic output, as appropriate. Locate the field probe at the initial test position in the 50 mm by 50 mm grid, which is contained in the measurement plane, refer to illustrated in Figure 8.2. If the field alignment method is used, align the probe for maximum field reception.

e) Record the reading at the output of the measurement system.

f) Scan the entire 50 mm by 50 mm region in equality spaced increments and record the reading at each measurement point, The distance between measurement points shall be sufficient to assure the identification of the maximum reading.

g) Identify the five contiguous sub-grids around the center sub-grid whose maximum reading is the lowest of all available choices. This eliminates the three sub-grids with the maximum readings. Thus, the six areas to be used to determine the WD's highest emissions are identified.

h) Identify the maximum reading within the non-excluded sub-grids identified in step g).

i) *Indirect measurement method*

The RF audio interference level in dB (V/m) is obtained by adding the MIF (in dB) to the maximum steady-state rms field-strength reading, in dB (V/m)

j) Compare this RF audio interference level with the categories in ANSI C63.19-2011 clause 8 and record the resulting WD category rating.

k) For the T-Coil mode M-rating assessment, determine whether the chosen perpendicular measurement point is contained in an included sub-grid of the first scan. If so, then a second scan is not necessary. The first scan and resultant category rating may be used for the T-Coil mode M rating.

Otherwise, repeat step a) through step i), with the grid shifted so that it is centered on the perpendicular measurement point. Record the WD category rating.

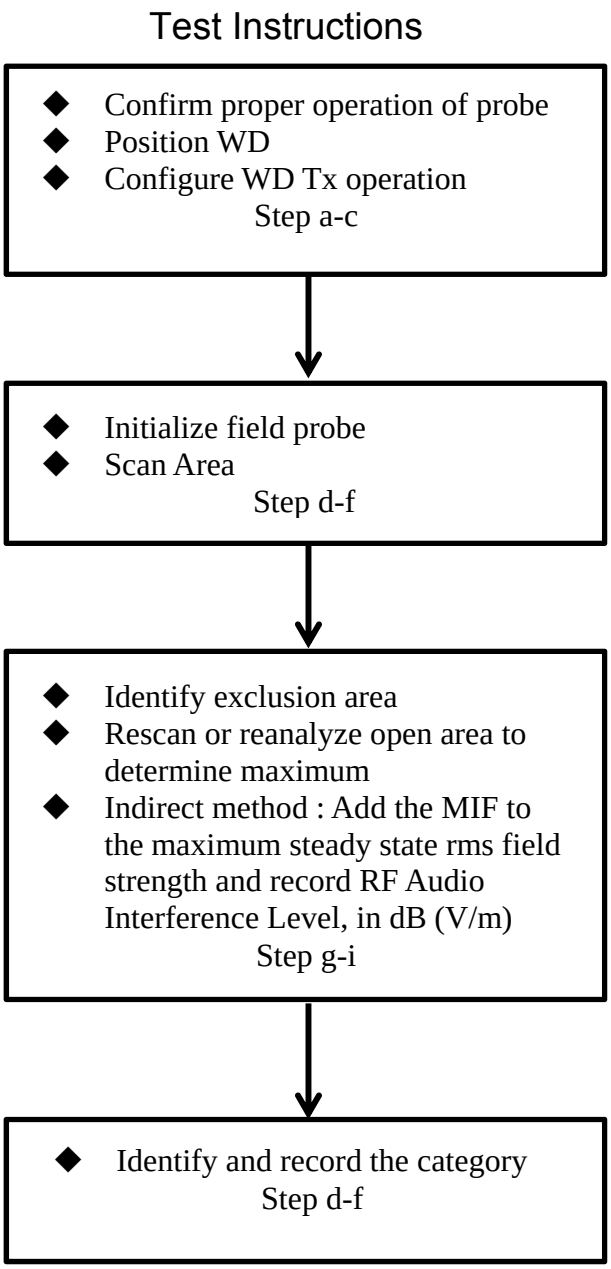

Fig 8.1 Flow Chart of HAC RF Emission

Fig 8.2 EUT reference and plane for HAC RF emission measurements

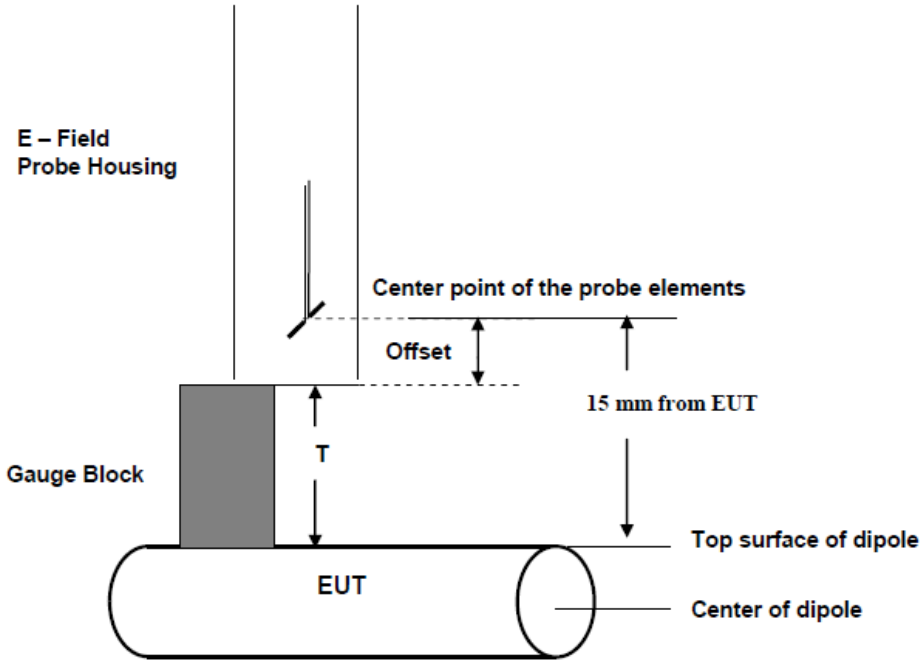

Fig. 8.3 Gauge block with E-field probe

8. Modulation Interference Factor

The HAC Standard ANSI C63.19-2011 defines a new scaling using the Modulation Interference Factor (MIF).

For any specific fixed and repeatable modulated signal, a modulation interference factor (MIF, expressed in dB) may be developed that relates its interference potential to its steady-state rms signal level or average power level. This factor is a function only of the audio-frequency amplitude modulation characteristics of the signal and is the same for field-strength and conducted power measurements. It is important to emphasize that the MIF is valid only for a specific repeatable audio-frequency amplitude modulation characteristic. Any change in modulation characteristic requires determination and application of a new MIF

The Modulation Interference factor (MIF, in dB) is added to the measured average E-field (in dBV/m) and converts it to the RF Audio Interference level (in dBV/m). This level considers the audible amplitude modulation components in the RF E-field. CW fields without amplitude modulation are assumed to not interfere with the hearing aid electronics. Modulations without time slots and low fluctuations at low frequencies have low MIF values, TDMA modulations with narrow transmission and repetition rates of few 100 Hz have high MIF values and give similar classifications as ANSI C63.19-2007.

ER3D, EF3D and EU2D E-field probes have a bandwidth <10 kHz and can therefore not evaluate the RF envelope in the full audio band. DASY52 is therefore using the indirect measurement method according to ANSI C63.19-2011 which is the primary method. These near field probes read the averaged E-field measurement. Especially for the new high peak-to-average (PAR) signal types, the probes shall be linearized by PMR calibration in order to not overestimate the field reading. Probe Modulation Response (PMR) calibration linearizes the probe response over its dynamic range for specific modulations which are characterized by their UID and result in an uncertainty specified in the probe calibration certificate. The MIF is characteristic for a given waveform envelope and can be used as a constant conversion factor if the probe has been PMR calibrated.

The evaluation method for the MIF is defined in ANSI C63.19-2011 section D.7. An RMS demodulated RF signal is fed to a spectral filter (similar to an A weighting filter) and forwarded to a temporal filter acting as a quasi-peak detector. The averaged output of these filtering is scaled to a 1 kHz 80% AM signal as reference. MIF measurement requires additional instrumentation and is not well suited for evaluation by the end user with reasonable uncertainty. It may alliteratively be determined through analysis and simulation, because it is constant and characteristic for a communication signal. DASY52 uses well-defined signals for PMR calibration. The MIF of these signals has been determined by simulation and it is automatically applied.

MIF values applied in this test report were provided by the HAC equipment provider, SPEAG, and the values are listed below

UID	Communication System Name	MIF(dB)
10021	GSM-FDD(TDMA,GMSK)	3.63
10011	UMTS-FDD(WCDMA)	-27.23

The MIF measurement uncertainty is estimated as follows, declared by HAC equipment provider SPEAG, for modulation frequencies from slotted waveforms with fundamental frequency and at least 2 harmonics within 10 kHz:

i) 0.2 dB for MIF: -7 to +5 dB,

ii) 0.5 dB for MIF: -13 to +11 dB

iii) 1 dB for MIF: > -20 dB

9. Low-power Exemption

<Max Tune-up Limit>

(Proximity Sensor Inactive)

Mode		Average Power (dBm)
GSM	GSM850	33.50
	GSM1900	30.50
WCDMA	Band V	23.50
	Band IV	22.50
	Band II	23.50
2.4GHz WLAN		16.50

(Proximity Sensor Active)

Mode		Average Power (dBm)
GSM	GSM850	26.00
	GSM1900	23.00
WCDMA	Band V	15.50
	Band IV	15.00
	Band II	15.50

<Low Power Exemption>

Air Interface	Max Average Antenna Input Power (dBm)	Worst Case MIF (dB)	Power + MIF(dB)	C63.19 test required
GSM 850	33.50	3.63	37.13	Yes
GSM1900	30.50	3.63	34.13	Yes
Band V	23.50	-27.23	-3.73	No
Band IV	22.50	-27.23	-4.73	No
Band II	23.50	-27.23	-3.73	No

Air Interface	Max Average Antenna Input Power (dBm)	C63.19 test required
2.4GHz WLAN	16.50	No

General Note:

1. According to ANSI C63.19 2011-version, for WWAN RF air interface technology of a device is exempt from testing when its average antenna input power plus its MIF is ≤17 dBm for any of its operating modes.
2. For WWAN operation the worst case MIF plus the worst case average antenna input power for all modes are investigated to determine the testing requirements for this device.
3. According to ANSI C63.19 2011, for WLAN RF emissions testing exemption shall be applied to an RF air interface technology in a device whose Peak antenna input power, averaged over intervals ≤50 μs, is ≤23 dBm.
4. Chose full power tested representatively reduced power for WWAN.
5. HAC RF rating is M3 for the air interface which meets the low power exemption.

10. Conducted RF Output Power (Unit: dBm)

Air Interface	GSM850			GSM1900		
Channel	128	189	251	512	661	810
Frequency (MHz)	824.2	836.4	848.8	1850.2	1880.0	1909.8
Average Antenna Input Power(dBm)	32.91	**32.96**	32.95	29.92	29.88	**29.96**

Air Interface	WCDMA Band V			WCDMA Band II		
Channel	4132	4182	4233	9262	9400	9538
Frequency (MHz)	826.4	836.4	846.6	1852.4	1880.0	1907.6
Average Antenna Input Power(dBm)	22.68	22.64	**22.80**	22.76	**22.82**	22.78

Air Interface	WCDMA Band IV		
Channel	1312	1413	1513
Frequency (MHz)	1712.4	1732.6	1752.6
Average Antenna Input Power(dBm)	**22.11**	22.00	22.05

11. HAC RF Emission Test Results

Plot No.	Air Interface	Operating Mode	Channel	Average Antenna Input Power (dBm)	MIF	RF audio interference level dB(V/m)	Margin to FCC M3 limit (dB)	M-Rating
1	GSM850	GSM Voice	128	32.91	3.63	39.87	5.13	M4
2	GSM850	GSM Voice	189	32.96	3.63	40.24	4.76	M3
3	GSM850	GSM Voice	251	32.95	3.63	40.02	4.98	M3
4	GSM1900	GSM Voice	512	29.92	3.63	31.07	3.93	M3
5	GSM1900	GSM Voice	661	29.88	3.63	33.65	1.35	M3
6	GSM1900	GSM Voice	810	29.96	3.63	33.56	1.44	M3

Remark:

1. The HAC measurement system applies MIF value onto the measured RMS E-field, which is indirect method in ANSI C63.19 2011 version, and reports the RF audio interference level.
2. The uncertainty is 0.2dB of MIF ranges from -7dB to +5dB.GSM850 band with rating M3, GSM1900 band with rating M3 would not be affected considering the MIF uncertainty.
3. There is no special HAC mode software on this EUT.

Test Engineer：Luke Lu.

12. Uncertainty Assessment

The component of uncertainly may generally be categorized according to the methods used to evaluate them. The evaluation of uncertainly by the statistical analysis of a series of observations is termed a Type A evaluation of uncertainty. The evaluation of uncertainty by means other than the statistical analysis of a series of observation is termed a Type B evaluation of uncertainty. Each component of uncertainty, however evaluated, is represented by an estimated standard deviation, termed standard uncertainty, which is determined by the positive square root of the estimated variance.

The combined standard uncertainty of the measurement result represents the estimated standard deviation of the result. It is obtained by combining the individual standard uncertainties of both Type A and Type B evaluation using the usual “root-sum-squares” (RSS) methods of combining standard deviations by taking the positive square root of the estimated variances. Expanded uncertainty is a measure of uncertainty that defines an interval about the measurement result within which the measured value is confidently believed to lie. It is obtained by multiplying the combined standard uncertainty by a coverage factor. For purpose of this document, a coverage factor two is used, which corresponds to confidence interval of about 95 %. The DASY uncertainty Budget is showed in Table 12.1.

Error Description	Uncertainty Value (±%)	Probability Distribution	Divisor	Ci (E)	Standard Uncertainty (E)
Measurement System					
Probe Calibration	5.1	Normal	1	1	± 5.1 %
Axial Isotropy	4.7	Rectangular	$\sqrt{3}$	1	± 2.7 %
Sensor Displacement	16.5	Rectangular	$\sqrt{3}$	1	± 9.5 %
Boundary Effects	2.4	Rectangular	$\sqrt{3}$	1	± 1.4 %
Phantom Boundary Effects	7.2	Rectangular	$\sqrt{3}$	1	± 4.1 %
Linearity	4.7	Rectangular	$\sqrt{3}$	1	± 2.7 %
Scaling with PMF Calibration	10.0	Rectangular	$\sqrt{3}$	1	± 5.77 %
System Detection Limit	1.0	Rectangular	$\sqrt{3}$	1	± 0.6 %
Readout Electronics	0.3	Normal	1	1	± 0.3 %
Response Time	0.8	Rectangular	$\sqrt{3}$	1	± 0.5 %
Integration Time	2.6	Rectangular	$\sqrt{3}$	1	± 1.5 %
RF Ambient Conditions	3.0	Rectangular	$\sqrt{3}$	1	± 1.7 %
RF Reflections	12.0	Rectangular	$\sqrt{3}$	1	± 6.9 %
Probe Positioner	1.2	Rectangular	$\sqrt{3}$	1	± 0.7 %
Probe Positioning	4.7	Rectangular	$\sqrt{3}$	1	± 2.7 %
Extrap. and Interpolation	1.0	Rectangular	$\sqrt{3}$	1	± 0.6 %
Test Sample Related					
Device Positioning Vertical	4.7	Rectangular	$\sqrt{3}$	1	± 2.7 %
Device Positioning Lateral	1.0	Rectangular	$\sqrt{3}$	1	± 0.6 %
Device Holder and Phantom	2.4	Rectangular	$\sqrt{3}$	1	± 1.4 %
Power Drift	5.0	Rectangular	$\sqrt{3}$	1	± 2.9 %
Phantom and Setup Related					
Phantom Thickness	2.4	Rectangular	$\sqrt{3}$	1	± 1.4 %
Combined Standard Uncertainty					± 16.30 %
Coverage Factor for 95 %					K = 2
Expanded Std. Uncertainty on Power					**± 32.6 %**
Expanded Std. Uncertainty on Field					**± 16.3 %**

Table 12.1 Uncertainty Budget of HAC free field assessment

Remark:

Worst-Case uncertainty budget for HAC free field assessment according to ANSIC63.19 [1], [2]. The budget is valid for the frequency range 700 MHz - 3 GHz and represents a worst case analysis.

13. References

[1] ANSI C63.19-2011, "American National Standard for Methods of Measurement of Compatibility between Wireless Communications Devices and Hearing Aids", 27 May 2011

[2] SPEAG DASY System Handbook

Appendix A. Plots of System Performance Check

The plots are shown as follows.

HAC_E_Dipole_835_151123

DUT: HAC-Dipole 835 MHz

Communication System: UID 0, CW; Frequency: 835 MHz;Duty Cycle: 1:1
Medium: Air Medium parameters used: $\sigma = 0$ S/m, $\varepsilon_r = 1$; $\rho = 0$ kg/m^3
Ambient Temperature: 23.4 ℃

DASY5 Configuration:
- Probe: ER3DV6 - SN2528; ConvF(1, 1, 1); Calibrated: 2015.03.24;
- Sensor-Surface: (Fix Surface)
- Electronics: DAE4 Sn1490; Calibrated: 2015.09.14
- Phantom: HAC Test Arch with AMCC; Type: SD HAC P01 BA;
- Measurement SW: DASY52, Version 52.8 (8);SEMCAD X Version 14.6.10 (7331)

E Scan - measurement distance from the probe sensor center to CD835 =15mm/Hearing Aid Compatibility Test at 15mm distance (41x361x1): Interpolated grid: dx=0.5000 mm, dy=0.5000 mm

Device Reference Point: 0, 0, -6.3 mm
Reference Value = 113.3 V/m; Power Drift = -0.01 dB
E-field emissions = 114.9 V/m
Average value of Total=(113.2+113.7)/2=113.45 V/m

MIF scaled E-field

Grid 1 **M4** **114.1 V/m**	Grid 2 **M4** **113.2 V/m**	Grid 3 **M4** **113.2 V/m**
Grid 4 **M4** **68.58 V/m**	Grid 5 **M4** **69.53 V/m**	Grid 6 **M4** **67.73 V/m**
Grid 7 **M4** **113.3 V/m**	Grid 8 **M4** **113.7 V/m**	Grid 9 **M4** **112.3 V/m**

Cursor:
Total = 115.1 V/m
E Category: M4
Location: 0.5, -69.5, 9.7 mm

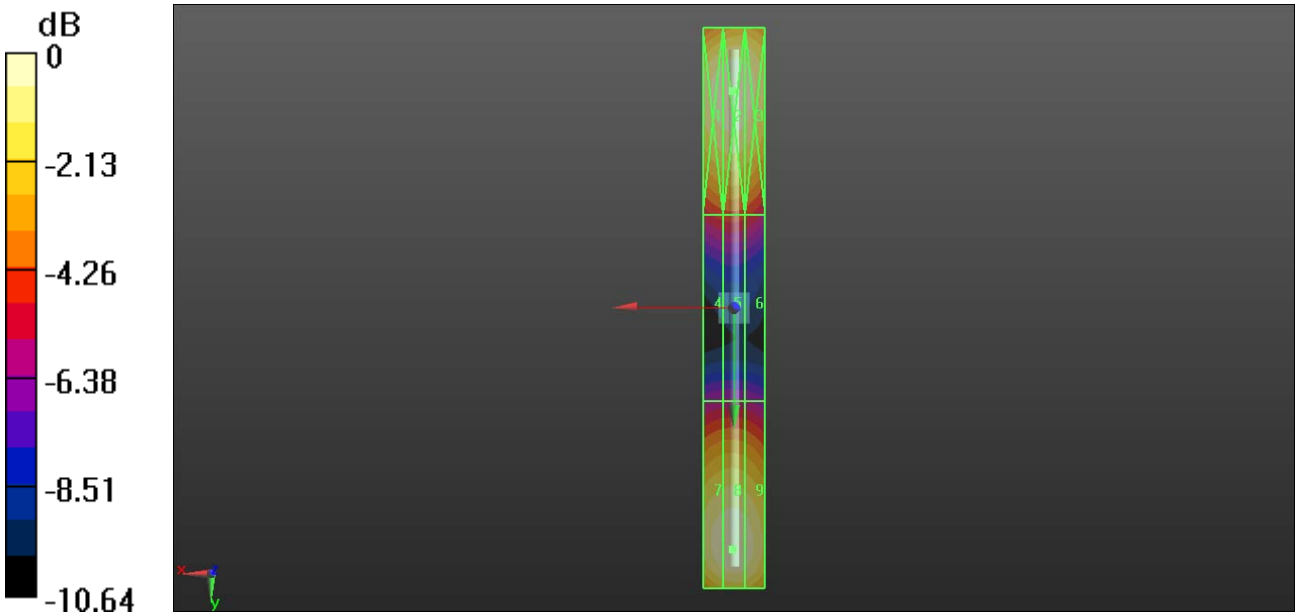

0 dB = 115.9 V/m = 41.28 dBV/m

HAC_E_Dipole_1880_151123

DUT: HAC Dipole 1880 MHz

Communication System: UID 0, CW; Frequency: 1880 MHz;Duty Cycle: 1:1
Medium: Air Medium parameters used: $\sigma = 0$ S/m, $\varepsilon_r = 1$; $\rho = 0$ kg/m^3
Ambient Temperature: 23.4 ℃

DASY5 Configuration:
- Probe: ER3DV6 - SN2528; ConvF(1, 1, 1); Calibrated: 2015.03.24;
- Sensor-Surface: (Fix Surface)
- Electronics: DAE4 Sn1490; Calibrated: 2015.09.14
- Phantom: HAC Test Arch with AMCC; Type: SD HAC P01 BA;
- Measurement SW: DASY52, Version 52.8 (8);SEMCAD X Version 14.6.10 (7331)

E Scan - measurement distance from the probe sensor center to CD1880 =15mm/Hearing Aid Compatibility Test at 15mm distance (41x181x1): Interpolated grid: dx=0.5000 mm, dy=0.5000 mm

Device Reference Point: 0, 0, -6.3 mm
Reference Value = 166.9 V/m; Power Drift = 0.00 dB
E-field emissions = 97.62 V/m
Average value of Total=(91.8+96.14)/2=93.97 V/m

MIF scaled E-field

Grid 1 **M3** **95.33 V/m**	Grid 2 **M3** **91.8 V/m**	Grid 3 **M3** **101.0 V/m**
Grid 4 **M3** **75.46 V/m**	Grid 5 **M3** **79.64 V/m**	Grid 6 **M3** **79.64 V/m**
Grid 7 **M3** **92.57 V/m**	Grid 8 **M3** **96.14 V/m**	Grid 9 **M3** **97.55 V/m**

Cursor:
Total = 101.0 V/m
E Category: M3
Location: -3.5, -30.5, 9.7 mm

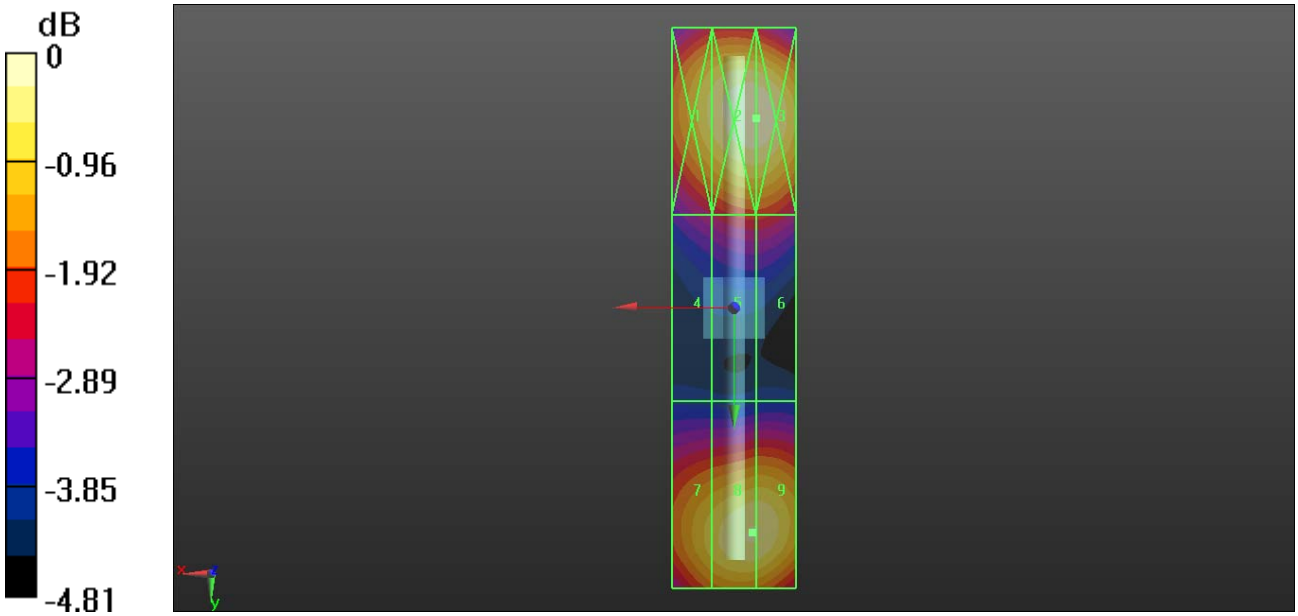

0 dB = 101.0 V/m = 40.09 dBV/m

Appendix B. Plots of RF Emission Measurement

The plots are shown as follows.

01_HAC RF_GSM850_GSM Voice_Ch128

Communication System: UID 10021 - DAB, GSM-FDD (TDMA, GMSK); Frequency: 824.2 MHz;Duty Cycle: 1:8.3
Medium: Air Medium parameters used: $\sigma = 0$ S/m, $\varepsilon_r = 1$; $\rho = 0$ kg/m^3
Ambient Temperature：23.4 ℃

DASY5 Configuration:
- Probe: ER3DV6 - SN2528; ConvF(1, 1, 1); Calibrated: 2015.03.24;
- Sensor-Surface: (Fix Surface)
- Electronics: DAE4 Sn1490; Calibrated: 2015.09.14
- Phantom: HAC Test Arch with AMCC; Type: SD HAC P01 BA;
- Measurement SW: DASY52, Version 52.8 (8); SEMCAD X Version 14.6.10 (7331)

Ch128/Hearing Aid Compatibility Test (101x101x1): Interpolated grid: dx=0.5000 mm, dy=0.5000 mm
Device Reference Point: 0, 0, -6.3 mm
Reference Value = 60.07 V/m; Power Drift = -0.16 dB
Applied MIF = 3.63 dB
RF audio interference level = 39.87 dBV/m
Emission category: M4

MIF scaled E-field

Grid 1 **M4** **32.94 dBV/m**	Grid 2 **M4** **34.28 dBV/m**	Grid 3 **M4** **34.14 dBV/m**
Grid 4 **M4** **37.36 dBV/m**	Grid 5 **M4** **39.87 dBV/m**	Grid 6 **M4** **39.73 dBV/m**
Grid 7 **M3** **40.12 dBV/m**	Grid 8 **M3** **42.23 dBV/m**	Grid 9 **M3** **41.94 dBV/m**

Cursor:
Total = 42.23 dBV/m
E Category: M3
Location: -4, 25, 8.7 mm

0 dB = 129.2 V/m

02_HAC RF_GSM850_GSM Voice_Ch189

Communication System: UID 10021 - DAB, GSM-FDD (TDMA, GMSK); Frequency: 836.4 MHz;Duty Cycle: 1:8.3
Medium: Air Medium parameters used: $\sigma = 0$ S/m, $\varepsilon_r = 1$; $\rho = 0$ kg/m^3
Ambient Temperature：23.4 ℃

DASY5 Configuration:
- Probe: ER3DV6 - SN2528; ConvF(1, 1, 1); Calibrated: 2015.03.24;
- Sensor-Surface: (Fix Surface)
- Electronics: DAE4 Sn1490; Calibrated: 2015.09.14
- Phantom: HAC Test Arch with AMCC; Type: SD HAC P01 BA;
- Measurement SW: DASY52, Version 52.8 (8); SEMCAD X Version 14.6.10 (7331)

Ch189/Hearing Aid Compatibility Test (101x101x1): Interpolated grid: dx=0.5000 mm, dy=0.5000 mm
Device Reference Point: 0, 0, -6.3 mm
Reference Value = 61.97 V/m; Power Drift = -0.11 dB
Applied MIF = 3.63 dB
RF audio interference level = 40.24 dBV/m
Emission category: M3

MIF scaled E-field

Grid 1 **M4** **33.28 dBV/m**	Grid 2 **M4** **34.65 dBV/m**	Grid 3 **M4** **34.52 dBV/m**
Grid 4 **M4** **37.69 dBV/m**	Grid 5 **M3** **40.24 dBV/m**	Grid 6 **M3** **40.1 dBV/m**
Grid 7 **M3** **40.48 dBV/m**	Grid 8 **M3** **42.66 dBV/m**	Grid 9 **M3** **42.38 dBV/m**

Cursor:
Total = 42.66 dBV/m
E Category: M3
Location: -4, 25, 8.7 mm

0 dB = 135.8 V/m

03_HAC RF_GSM850_GSM Voice_Ch251

Communication System: UID 10021 - DAB, GSM-FDD (TDMA, GMSK); Frequency: 848.8 MHz;Duty Cycle: 1:8.3
Medium: Air Medium parameters used: $\sigma = 0$ S/m, $\varepsilon_r = 1$; $\rho = 0$ kg/m^3
Ambient Temperature：23.4 ℃

DASY5 Configuration:
- Probe: ER3DV6 - SN2528; ConvF(1, 1, 1); Calibrated: 2015.03.24;
- Sensor-Surface: (Fix Surface)
- Electronics: DAE4 Sn1490; Calibrated: 2015.09.14
- Phantom: HAC Test Arch with AMCC; Type: SD HAC P01 BA;
- Measurement SW: DASY52, Version 52.8 (8); SEMCAD X Version 14.6.10 (7331)

Ch251/Hearing Aid Compatibility Test (101x101x1): Interpolated grid: dx=0.5000 mm, dy=0.5000 mm
Device Reference Point: 0, 0, -6.3 mm
Reference Value = 59.80 V/m; Power Drift = -0.06 dB
Applied MIF = 3.63 dB
RF audio interference level = 40.02 dBV/m
Emission category: M3

MIF scaled E-field

Grid 1 **M4** **32.95 dBV/m**	Grid 2 **M4** **34.37 dBV/m**	Grid 3 **M4** **34.24 dBV/m**
Grid 4 **M4** **37.43 dBV/m**	Grid 5 **M3** **40.02 dBV/m**	Grid 6 **M4** **39.9 dBV/m**
Grid 7 **M3** **40.15 dBV/m**	Grid 8 **M3** **42.38 dBV/m**	Grid 9 **M3** **42.11 dBV/m**

Cursor:
Total = 31.44 dBV/m
E Category: M4
Location: 25, -25, 8.7 mm

0 dB = 131.5 V/m

11_HAC RF_GSM1900_GSM Voice_Ch512

Communication System: UID 10021 - DAB, GSM-FDD (TDMA, GMSK); Frequency: 1850.2 MHz;Duty Cycle: 1:8.3
Medium: Air Medium parameters used: $\sigma = 0$ S/m, $\varepsilon_r = 1$; $\rho = 0$ kg/m^3
Ambient Temperature：23.4 ℃

DASY5 Configuration:
- Probe: ER3DV6 - SN2528; ConvF(1, 1, 1); Calibrated: 2015.03.24;
- Sensor-Surface: (Fix Surface)
- Electronics: DAE4 Sn1490; Calibrated: 2015.09.14
- Phantom: HAC Test Arch with AMCC; Type: SD HAC P01 BA;
- Measurement SW: DASY52, Version 52.8 (8); SEMCAD X Version 14.6.10 (7331)

Ch512/Hearing Aid Compatibility Test (101x101x1): Interpolated grid: dx=0.5000 mm, dy=0.5000 mm
Device Reference Point: 0, 0, -6.3 mm
Reference Value = 26.26 V/m; Power Drift = -0.12 dB
Applied MIF = 3.63 dB
RF audio interference level = 31.07 dBV/m
Emission category: M3

MIF scaled E-field

Grid 1 **M4** **26.4 dBV/m**	Grid 2 **M4** **29.2 dBV/m**	Grid 3 **M4** **29.19 dBV/m**
Grid 4 **M4** **27.95 dBV/m**	Grid 5 **M3** **31.07 dBV/m**	Grid 6 **M3** **31.03 dBV/m**
Grid 7 **M4** **27.94 dBV/m**	Grid 8 **M3** **31.07 dBV/m**	Grid 9 **M3** **31.03 dBV/m**

Cursor:
Total = 31.07 dBV/m
E Category: M3
Location: -7, 8.5, 8.7 mm

0 dB = 35.76 V/m

12_HAC RF_GSM1900_GSM Voice_Ch661

Communication System: UID 10021 - DAB, GSM-FDD (TDMA, GMSK); Frequency: 1880 MHz;Duty Cycle: 1:8.3
Medium: Air Medium parameters used: $\sigma = 0$ S/m, $\varepsilon_r = 1$; $\rho = 0$ kg/m^3
Ambient Temperature：23.4 ℃

DASY5 Configuration:
- Probe: ER3DV6 - SN2528; ConvF(1, 1, 1); Calibrated: 2015.03.24;
- Sensor-Surface: (Fix Surface)
- Electronics: DAE4 Sn1490; Calibrated: 2015.09.14
- Phantom: HAC Test Arch with AMCC; Type: SD HAC P01 BA;
- Measurement SW: DASY52, Version 52.8 (8); SEMCAD X Version 14.6.10 (7331)

Ch661/Hearing Aid Compatibility Test (101x101x1): Interpolated grid: dx=0.5000 mm, dy=0.5000 mm
Device Reference Point: 0, 0, -6.3 mm
Reference Value = 35.63 V/m; Power Drift = -0.19 dB
Applied MIF = 3.63 dB
RF audio interference level = 33.65 dBV/m
Emission category: M3

MIF scaled E-field

Grid 1 **M4** **28.63 dBV/m**	Grid 2 **M3** **31.62 dBV/m**	Grid 3 **M3** **31.62 dBV/m**
Grid 4 **M3** **30.52 dBV/m**	Grid 5 **M3** **33.65 dBV/m**	Grid 6 **M3** **33.6 dBV/m**
Grid 7 **M3** **30.52 dBV/m**	Grid 8 **M3** **33.65 dBV/m**	Grid 9 **M3** **33.6 dBV/m**

Cursor:
Total = 33.65 dBV/m
E Category: M3
Location: -7, 9, 8.7 mm

0 dB = 48.13 V/m

13_HAC RF_GSM1900_GSM Voice_Ch810

Communication System: UID 10021 - DAB, GSM-FDD (TDMA, GMSK); Frequency: 1909.8 MHz;Duty Cycle: 1:8.3
Medium: Air Medium parameters used: $\sigma = 0$ S/m, $\varepsilon_r = 1$; $\rho = 0$ kg/m^3
Ambient Temperature：23.4 ℃

DASY5 Configuration:
- Probe: ER3DV6 - SN2528; ConvF(1, 1, 1); Calibrated: 2015.03.24;
- Sensor-Surface: (Fix Surface)
- Electronics: DAE4 Sn1490; Calibrated: 2015.09.14
- Phantom: HAC Test Arch with AMCC; Type: SD HAC P01 BA;
- Measurement SW: DASY52, Version 52.8 (8); SEMCAD X Version 14.6.10 (7331)

Ch810/Hearing Aid Compatibility Test (101x101x1): Interpolated grid: dx=0.5000 mm, dy=0.5000 mm
Device Reference Point: 0, 0, -6.3 mm
Reference Value = 35.56 V/m; Power Drift = -0.09 dB
Applied MIF = 3.63 dB
RF audio interference level = 33.56 dBV/m
Emission category: M3

MIF scaled E-field

Grid 1 **M4** **28.63 dBV/m**	Grid 2 **M3** **31.6 dBV/m**	Grid 3 **M3** **31.59 dBV/m**
Grid 4 **M3** **30.49 dBV/m**	Grid 5 **M3** **33.56 dBV/m**	Grid 6 **M3** **33.52 dBV/m**
Grid 7 **M3** **30.47 dBV/m**	Grid 8 **M3** **33.56 dBV/m**	Grid 9 **M3** **33.52 dBV/m**

Cursor:
Total = 33.56 dBV/m
E Category: M3
Location: -7, 8.5, 8.7 mm

0 dB = 47.67 V/m

Appendix C. DASY Calibration Certificate

The DASY calibration certificates are shown as follows.

Calibration Laboratory of
Schmid & Partner
Engineering AG
Zeughausstrasse 43, 8004 Zurich, Switzerland

S Schweizerischer Kalibrierdienst
C Service suisse d'étalonnage
Servizio svizzero di taratura
S Swiss Calibration Service

Accredited by the Swiss Accreditation Service (SAS)
The Swiss Accreditation Service is one of the signatories to the EA Multilateral Agreement for the recognition of calibration certificates

Accreditation No.: SCS 0108

Client Sporton-CN (Auden)

Certificate No: CD835V3-1184_Apr15

CALIBRATION CERTIFICATE

Object	CD835V3 - SN: 1184
Calibration procedure(s)	QA CAL-20.v6 Calibration procedure for dipoles in air
Calibration date:	April 22, 2015

This calibration certificate documents the traceability to national standards, which realize the physical units of measurements (SI).
The measurements and the uncertainties with confidence probability are given on the following pages and are part of the certificate.

All calibrations have been conducted in the closed laboratory facility: environment temperature (22 ± 3)°C and humidity < 70%.

Calibration Equipment used (M&TE critical for calibration)

Primary Standards	ID #	Cal Date (Certificate No.)	Scheduled Calibration
Power meter EPM-442A	GB37480704	07-Oct-14 (No. 217-02020)	Oct-15
Power sensor HP 8481A	US37292783	07-Oct-14 (No. 217-02020)	Oct-15
Power sensor HP 8481A	MY41092317	07-Oct-14 (No. 217-02021)	Oct-15
Reference 10 dB Attenuator	SN: 5047.2 / 06327	01-Apr-15 (No. 217-02130)	Mar-16
Probe ER3DV6	SN: 2336	31-Dec-14 (No. ER3-2336_Dec14)	Dec-15
Probe H3DV6	SN: 6065	31-Dec-14 (No. H3-6065_Dec14)	Dec-15
DAE4	SN: 781	12-Sep-14 (No. DAE4-781_Sep14)	Sep-15

Secondary Standards	ID #	Check Date (in house)	Scheduled Check
Power meter Agilent 4419B	SN: GB42420191	09-Oct-09 (in house check Sep-14)	In house check: Sep-16
Power sensor HP E4412A	SN: US38485102	05-Jan-10 (in house check Sep-14)	In house check: Sep-16
Power sensor HP 8482A	SN: US37295597	09-Oct-09 (in house check Sep-14)	In house check: Sep-16
Network Analyzer HP 8753E	US37390585	18-Oct-01 (in house check Oct-14)	In house check: Oct-15
RF generator R&S SMT-06	SN: 832283/011	27-Aug-12 (in house check Oct-13)	In house check: Oct-16

	Name	Function	Signature
Calibrated by:	Jeton Kastrati	Laboratory Technician	
Approved by:	Fin Bomholt	Deputy Technical Manager	F. Bomholt

Issued: April 23, 2015

This calibration certificate shall not be reproduced except in full without written approval of the laboratory.

References

[1] ANSI-C63.19-2007
American National Standard for Methods of Measurement of Compatibility between Wireless Communications Devices and Hearing Aids.

[2] ANSI-C63.19-2011
American National Standard, Methods of Measurement of Compatibility between Wireless Communications Devices and Hearing Aids.

Methods Applied and Interpretation of Parameters:

- *Coordinate System:* y-axis is in the direction of the dipole arms. z-axis is from the basis of the antenna (mounted on the table) towards its feed point between the two dipole arms. x-axis is normal to the other axes. In coincidence with the standards [1], the measurement planes (probe sensor center) are selected to be at a distance of 10 mm (15 mm for [2]) above the top metal edge of the dipole arms.
- *Measurement Conditions:* Further details are available from the hardcopies at the end of the certificate. All figures stated in the certificate are valid at the frequency indicated. The forward power to the dipole connector is set with a calibrated power meter connected and monitored with an auxiliary power meter connected to a directional coupler. While the dipole under test is connected, the forward power is adjusted to the same level.
- *Antenna Positioning:* The dipole is mounted on a HAC Test Arch phantom using the matching dipole positioner with the arms horizontal and the feeding cable coming from the floor. The measurements are performed in a shielded room with absorbers around the setup to reduce the reflections.
  It is verified before the mounting of the dipole under the Test Arch phantom, that its arms are perfectly in a line. It is installed on the HAC dipole positioner with its arms parallel below the dielectric reference wire and able to move elastically in vertical direction without changing its relative position to the top center of the Test Arch phantom. The vertical distance to the probe is adjusted after dipole mounting with a DASY5 Surface Check job. Before the measurement, the distance between phantom surface and probe tip is verified. The proper measurement distance is selected by choosing the matching section of the HAC Test Arch phantom with the proper device reference point (upper surface of the dipole) and the matching grid reference point (tip of the probe) considering the probe sensor offset. The vertical distance to the probe is essential for the accuracy.
- *Feed Point Impedance and Return Loss:* These parameters are measured using a HP 8753E Vector Network Analyzer. The impedance is specified at the SMA connector of the dipole. The influence of reflections was eliminating by applying the averaging function while moving the dipole in the air, at least 70cm away from any obstacles.
- *E-field distribution:* E field is measured in the x-y-plane with an isotropic ER3D-field probe with 100 mW forward power to the antenna feed point. In accordance with [1] and [2], the scan area is 20mm wide, its length exceeds the dipole arm length (180 or 90mm). The sensor center is 10 mm (15 mm for [2]) (in z) above the metal top of the dipole arms. Two 3D maxima are available near the end of the dipole arms. Assuming the dipole arms are perfectly in one line, the average of these two maxima (in subgrid 2 and subgrid 8) is determined to compensate for any non-parallelity to the measurement plane as well as the sensor displacement. The E-field value stated as calibration value represents the maximum of the interpolated 3D-E-field, in the plane above the dipole surface.
- *H-field distribution:* H-field is measured with an isotropic H-field probe with 100mW forward power to the antenna feed point, in the x-y-plane. The scan area and sensor distance is equivalent to the E-field scan. The maximum of the field is available at the center (subgrid 5) above the feed point. The H-field value stated as calibration value represents the maximum of the interpolated H-field, 10mm above the dipole surface at the feed point.

The reported uncertainty of measurement is stated as the standard uncertainty of measurement multiplied by the coverage factor k=2, which for a normal distribution corresponds to a coverage probability of approximately 95%.

Measurement Conditions

DASY system configuration, as far as not given on page 1.

DASY Version	DASY5	V52.8.8
Phantom	HAC Test Arch	
Distance Dipole Top - Probe Center	10 mm 15 mm	
Scan resolution	dx, dy = 5 mm	
Frequency	835 MHz ± 1 MHz	
Input power drift	< 0.05 dB	

Maximum Field values at 835 MHz

H-field 10 mm above dipole surface	condition	**interpolated maximum**
Maximum measured	100 mW input power	**0.455 A/m ± 8.2 % (k=2)**

E-field 10 mm above dipole surface	condition	**Interpolated maximum**
Maximum measured above high end	100mW input power	171.6V/m = 44.69 dBV/m
Maximum measured above low end	100mW input power	161.1V/m = 44.14 dBV/m
Averaged maximum above arm	100mW input power	**166.3V/m ± 12.8 % (k=2)**

E-field 15 mm above dipole surface	condition	**Interpolated maximum**
Maximum measured above high end	100mW input power	108.1V/m = 40.68 dBV/m
Maximum measured above low end	100mW input power	104.8V/m = 40.40 dBV/m
Averaged maximum above arm	100mW input power	**106.5V/m ± 12.8 % (k=2)**

Appendix (Additional assessments outside the scope of SCS 0108)

Antenna Parameters

Frequency	Return Loss	Impedance
800 MHz	17.2 dB	43.0 Ω - 10.8 jΩ
835 MHz	25.2 dB	49.3 Ω + 5.4 jΩ
900 MHz	16.6 dB	56.1 Ω - 14.6 jΩ
950 MHz	20.4 dB	46.8 Ω + 8.7 jΩ
960 MHz	15.2 dB	54.1 Ω + 18.0 jΩ

3.2 Antenna Design and Handling

The calibration dipole has a symmetric geometry with a built-in two stub matching network, which leads to the enhanced bandwidth.
The dipole is built of standard semirigid coaxial cable. The internal matching line is open ended. The antenna is therefore open for DC signals.
Do not apply force to dipole arms, as they are liable to bend. The soldered connections near the feedpoint may be damaged. After excessive mechanical stress or overheating, check the impedance characteristics to ensure that the internal matching network is not affected.

After long term use with 40W radiated power, only a slight warming of the dipole near the feedpoint can be measured.

Impedance Measurement Plot

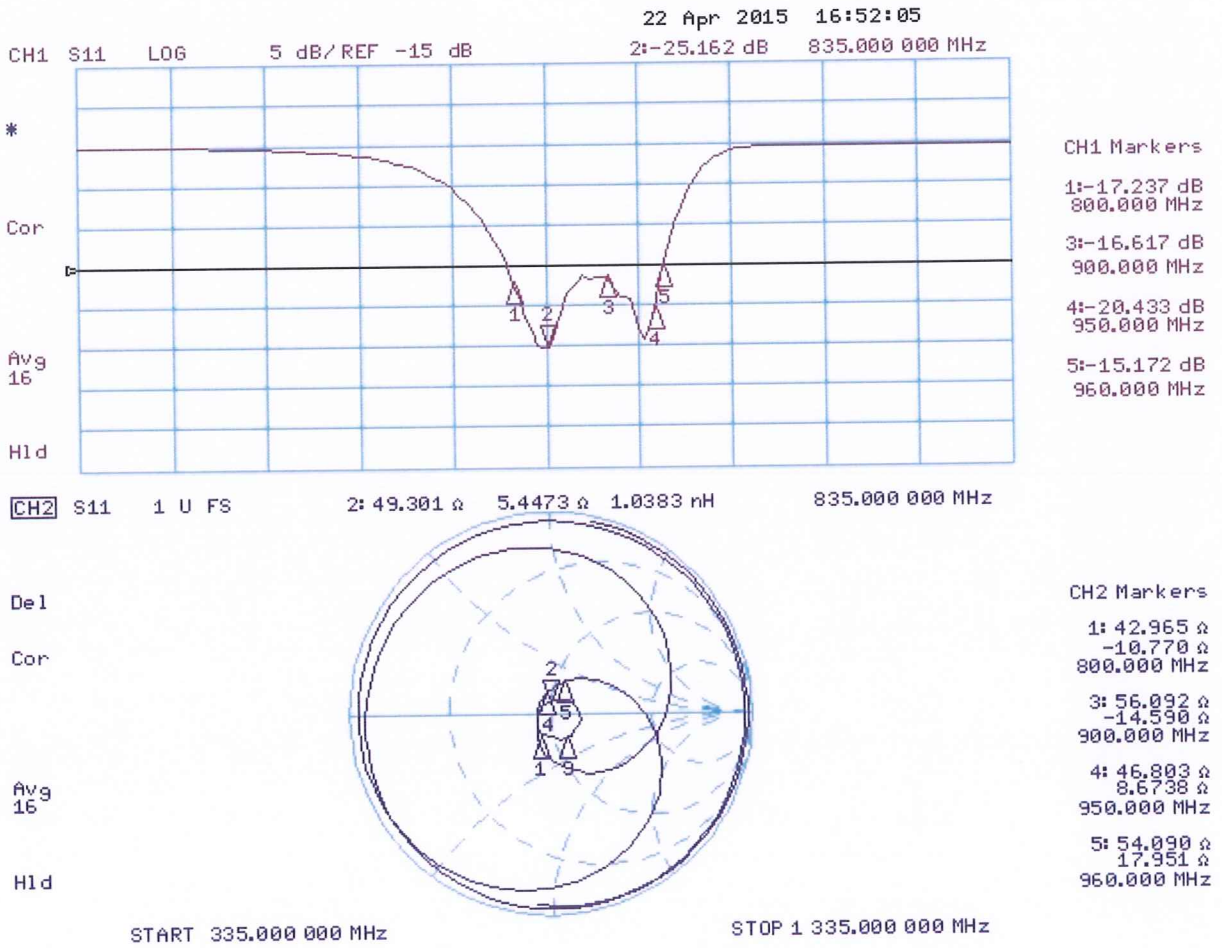

DASY5 H-field Result

Date: 22.04.2015

Test Laboratory: SPEAG Lab2

DUT: HAC-Dipole 835 MHz; Type: CD835V3; Serial: CD835V3 - SN: 1184

Communication System: UID 0 - CW ; Frequency: 835 MHz
Medium parameters used: $\sigma = 0$ S/m, $\varepsilon_r = 1$; $\rho = 1$ kg/m^3
Phantom section: RF Section
Measurement Standard: DASY5 (IEEE/IEC/ANSI C63.19-2011)

DASY52 Configuration:

- Probe: H3DV6 - SN6065; ; Calibrated: 31.12.2014
- Sensor-Surface: (Fix Surface)
- Electronics: DAE4 Sn781; Calibrated: 12.09.2014
- Phantom: HAC Test Arch with AMCC; Type: SD HAC P01 BA; Serial: 1070
- DASY52 52.8.8(1222); SEMCAD X 14.6.10(7331)

Dipole H-Field measurement @ 835MHz/H-Scan - 835MHz d=10mm/Hearing Aid Compatibility Test (41x361x1):
Interpolated grid: dx=0.5000 mm, dy=0.5000 mm
Device Reference Point: 0, 0, -6.3 mm
Reference Value = 0.4830 A/m; Power Drift = -0.01 dB
PMR not calibrated. PMF = 1.000 is applied.
H-field emissions = 0.4547 A/m
Near-field category: M4 (AWF 0 dB)

PMF scaled H-field

Grid 1 **M4** **0.373 A/m**	Grid 2 **M4** **0.402 A/m**	Grid 3 **M4** **0.386 A/m**
Grid 4 **M4** **0.420 A/m**	Grid 5 **M4** **0.455 A/m**	Grid 6 **M4** **0.437 A/m**
Grid 7 **M4** **0.370 A/m**	Grid 8 **M4** **0.403 A/m**	Grid 9 **M4** **0.387 A/m**

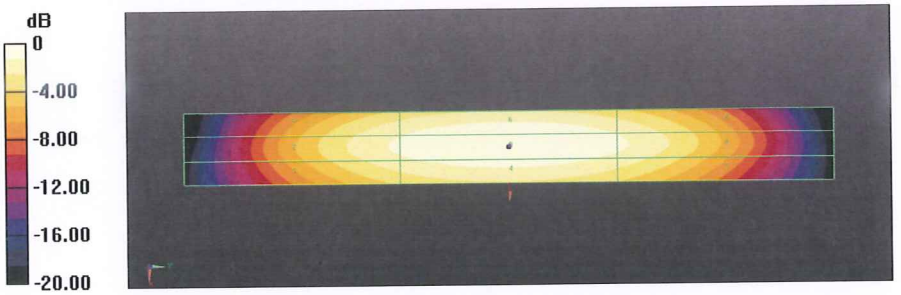

0 dB = 0.4547 A/m = -6.85 dBA/m

DASY5 E-field Result

Date: 22.04.2015

Test Laboratory: SPEAG Lab2

DUT: HAC-Dipole 835 MHz; Type: CD835V3; Serial: CD835V3 - SN: 1184

Communication System: UID 0 - CW ; Frequency: 835 MHz
Medium parameters used: $\sigma = 0$ S/m, $\varepsilon_r = 1$; $\rho = 1000$ kg/m^3
Phantom section: RF Section
Measurement Standard: DASY5 (IEEE/IEC/ANSI C63.19-2011)

DASY52 Configuration:

- Probe: ER3DV6 - SN2336; ConvF(1, 1, 1); Calibrated: 31.12.2014;
- Sensor-Surface: (Fix Surface)
- Electronics: DAE4 Sn781; Calibrated: 12.09.2014
- Phantom: HAC Test Arch with AMCC; Type: SD HAC P01 BA; Serial: 1070
- DASY52 52.8.8(1222); SEMCAD X 14.6.10(7331)

Dipole E-Field measurement @ 835MHz/E-Scan - 835MHz d=10mm/Hearing Aid Compatibility Test (41x361x1):
Interpolated grid: dx=0.5000 mm, dy=0.5000 mm
Device Reference Point: 0, 0, -6.3 mm
Reference Value = 122.7 V/m; Power Drift = 0.00 dB
Applied MIF = 0.00 dB
RF audio interference level = 44.69 dBV/m
Emission category: M3

MIF scaled E-field

Grid 1 **M3** **43.98 dBV/m**	Grid 2 **M3** **44.69 dBV/m**	Grid 3 **M3** **44.53 dBV/m**
Grid 4 **M4** **38.45 dBV/m**	Grid 5 **M4** **39.03 dBV/m**	Grid 6 **M4** **38.95 dBV/m**
Grid 7 **M3** **43.54 dBV/m**	Grid 8 **M3** **44.14 dBV/m**	Grid 9 **M3** **44.04 dBV/m**

Dipole E-Field measurement @ 835MHz/E-Scan - 835MHz d=15mm/Hearing Aid Compatibility Test (41x361x1):
Interpolated grid: dx=0.5000 mm, dy=0.5000 mm
Device Reference Point: 0, 0, -6.3 mm
Reference Value = 122.1 V/m; Power Drift = 0.03 dB
Applied MIF = 0.00 dB
RF audio interference level = 40.68 dBV/m
Emission category: M3

MIF scaled E-field

Grid 1 **M3** **40.3 dBV/m**	Grid 2 **M3** **40.68 dBV/m**	Grid 3 **M3** **40.6 dBV/m**
Grid 4 **M4** **35.75 dBV/m**	Grid 5 **M4** **36.08 dBV/m**	Grid 6 **M4** **36.05 dBV/m**
Grid 7 **M3** **40.07 dBV/m**	Grid 8 **M3** **40.4 dBV/m**	Grid 9 **M3** **40.35 dBV/m**

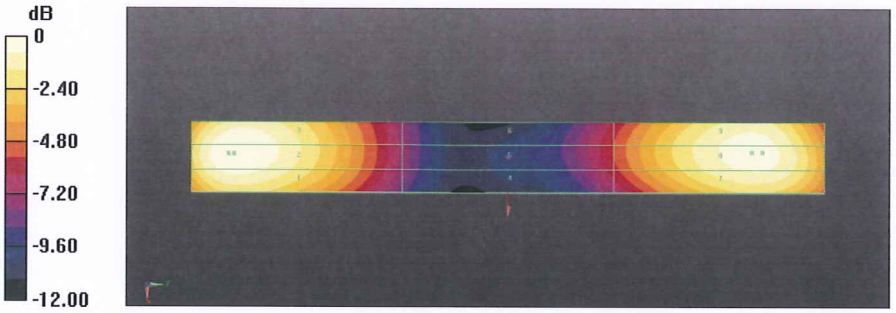

0 dB = 171.6 V/m = 44.69 dBV/m

Calibration Laboratory of
Schmid & Partner
Engineering AG
Zeughausstrasse 43, 8004 Zurich, Switzerland

S Schweizerischer Kalibrierdienst
C Service suisse d'étalonnage
Servizio svizzero di taratura
S Swiss Calibration Service

Accredited by the Swiss Accreditation Service (SAS)
The Swiss Accreditation Service is one of the signatories to the EA Multilateral Agreement for the recognition of calibration certificates

Accreditation No.: SCS 0108

Client Sporton-CN (Auden)

Certificate No: CD1880V3-1170_Apr15

CALIBRATION CERTIFICATE

Object	CD1880V3 - SN: 1170
Calibration procedure(s)	QA CAL-20.v6 Calibration procedure for dipoles in air
Calibration date:	April 22, 2015

This calibration certificate documents the traceability to national standards, which realize the physical units of measurements (SI).
The measurements and the uncertainties with confidence probability are given on the following pages and are part of the certificate.

All calibrations have been conducted in the closed laboratory facility: environment temperature (22 ± 3)°C and humidity < 70%.

Calibration Equipment used (M&TE critical for calibration)

Primary Standards	ID #	Cal Date (Certificate No.)	Scheduled Calibration
Power meter EPM-442A	GB37480704	07-Oct-14 (No. 217-02020)	Oct-15
Power sensor HP 8481A	US37292783	07-Oct-14 (No. 217-02020)	Oct-15
Power sensor HP 8481A	MY41092317	07-Oct-14 (No. 217-02021)	Oct-15
Reference 10 dB Attenuator	SN: 5047.2 / 06327	01-Apr-15 (No. 217-02130)	Mar-16
Probe ER3DV6	SN: 2336	31-Dec-14 (No. ER3-2336_Dec14)	Dec-15
Probe H3DV6	SN: 6065	31-Dec-14 (No. H3-6065_Dec14)	Dec-15
DAE4	SN: 781	12-Sep-14 (No. DAE4-781_Sep14)	Sep-15

Secondary Standards	ID #	Check Date (in house)	Scheduled Check
Power meter Agilent 4419B	SN: GB42420191	09-Oct-09 (in house check Sep-14)	In house check: Sep-16
Power sensor HP E4412A	SN: US38485102	05-Jan-10 (in house check Sep-14)	In house check: Sep-16
Power sensor HP 8482A	SN: US37295597	09-Oct-09 (in house check Sep-14)	In house check: Sep-16
Network Analyzer HP 8753E	US37390585	18-Oct-01 (in house check Oct-14)	In house check: Oct-15
RF generator R&S SMT-06	SN: 832283/011	27-Aug-12 (in house check Oct-13)	In house check: Oct-16

	Name	Function	Signature
Calibrated by:	Jeton Kastrati	Laboratory Technician	
Approved by:	Fin Bomholt	Deputy Technical Manager	F. Bomholt

Issued: April 23, 2015

This calibration certificate shall not be reproduced except in full without written approval of the laboratory.

References

[1] ANSI-C63.19-2007
American National Standard for Methods of Measurement of Compatibility between Wireless Communications Devices and Hearing Aids.

[2] ANSI-C63.19-2011
American National Standard, Methods of Measurement of Compatibility between Wireless Communications Devices and Hearing Aids.

Methods Applied and Interpretation of Parameters:

- *Coordinate System:* y-axis is in the direction of the dipole arms. z-axis is from the basis of the antenna (mounted on the table) towards its feed point between the two dipole arms. x-axis is normal to the other axes. In coincidence with the standards [1], the measurement planes (probe sensor center) are selected to be at a distance of 10 mm (15 mm for [2]) above the top metal edge of the dipole arms.
- *Measurement Conditions:* Further details are available from the hardcopies at the end of the certificate. All figures stated in the certificate are valid at the frequency indicated. The forward power to the dipole connector is set with a calibrated power meter connected and monitored with an auxiliary power meter connected to a directional coupler. While the dipole under test is connected, the forward power is adjusted to the same level.
- *Antenna Positioning:* The dipole is mounted on a HAC Test Arch phantom using the matching dipole positioner with the arms horizontal and the feeding cable coming from the floor. The measurements are performed in a shielded room with absorbers around the setup to reduce the reflections.
  It is verified before the mounting of the dipole under the Test Arch phantom, that its arms are perfectly in a line. It is installed on the HAC dipole positioner with its arms parallel below the dielectric reference wire and able to move elastically in vertical direction without changing its relative position to the top center of the Test Arch phantom. The vertical distance to the probe is adjusted after dipole mounting with a DASY5 Surface Check job. Before the measurement, the distance between phantom surface and probe tip is verified. The proper measurement distance is selected by choosing the matching section of the HAC Test Arch phantom with the proper device reference point (upper surface of the dipole) and the matching grid reference point (tip of the probe) considering the probe sensor offset. The vertical distance to the probe is essential for the accuracy.
- *Feed Point Impedance and Return Loss:* These parameters are measured using a HP 8753E Vector Network Analyzer. The impedance is specified at the SMA connector of the dipole. The influence of reflections was eliminating by applying the averaging function while moving the dipole in the air, at least 70cm away from any obstacles.
- *E-field distribution:* E field is measured in the x-y-plane with an isotropic ER3D-field probe with 100 mW forward power to the antenna feed point. In accordance with [1] and [2], the scan area is 20mm wide, its length exceeds the dipole arm length (180 or 90mm). The sensor center is 10 mm (15 mm for [2]) (in z) above the metal top of the dipole arms. Two 3D maxima are available near the end of the dipole arms. Assuming the dipole arms are perfectly in one line, the average of these two maxima (in subgrid 2 and subgrid 8) is determined to compensate for any non-parallelity to the measurement plane as well as the sensor displacement. The E-field value stated as calibration value represents the maximum of the interpolated 3D-E-field, in the plane above the dipole surface.
- *H-field distribution:* H-field is measured with an isotropic H-field probe with 100mW forward power to the antenna feed point, in the x-y-plane. The scan area and sensor distance is equivalent to the E-field scan. The maximum of the field is available at the center (subgrid 5) above the feed point. The H-field value stated as calibration value represents the maximum of the interpolated H-field, 10mm above the dipole surface at the feed point.

The reported uncertainty of measurement is stated as the standard uncertainty of measurement multiplied by the coverage factor k=2, which for a normal distribution corresponds to a coverage probability of approximately 95%.

Measurement Conditions

DASY system configuration, as far as not given on page 1.

DASY Version	DASY5	V52.8.8
Phantom	HAC Test Arch	
Distance Dipole Top - Probe Center	10 mm 15 mm	
Scan resolution	dx, dy = 5 mm	
Frequency	1880 MHz ± 1 MHz	
Input power drift	< 0.05 dB	

Maximum Field values at 1880 MHz

H-field 10 mm above dipole surface	condition	**interpolated maximum**
Maximum measured	100 mW input power	**0.456 A/m ± 8.2 % (k=2)**

E-field 10 mm above dipole surface	condition	**Interpolated maximum**
Maximum measured above high end	100mW input power	141.0V/m = 42.98 dBV/m
Maximum measured above low end	100mW input power	136.9V/m = 42.73 dBV/m
Averaged maximum above arm	100mW input power	**138.9V/m ± 12.8 % (k=2)**

E-field 15 mm above dipole surface	condition	**Interpolated maximum**
Maximum measured above high end	100mW input power	89.5V/m = 39.03 dBV/m
Maximum measured above low end	100mW input power	87.8V/m = 38.87 dBV/m
Averaged maximum above arm	100mW input power	**88.7V/m ± 12.8 % (k=2)**

Appendix (Additional assessments outside the scope of SCS 0108)

Antenna Parameters

Frequency	Return Loss	Impedance
1730 MHz	24.2 dB	48.0 Ω + 5.7 jΩ
1880 MHz	20.1 dB	47.5 Ω + 9.3 jΩ
1900 MHz	20.3 dB	50.1 Ω + 9.7 jΩ
1950 MHz	26.1 dB	54.4 Ω + 2.7 jΩ
2000 MHz	22.2 dB	42.8 Ω + 0.3 jΩ

3.2 Antenna Design and Handling

The calibration dipole has a symmetric geometry with a built-in two stub matching network, which leads to the enhanced bandwidth.
The dipole is built of standard semirigid coaxial cable. The internal matching line is open ended. The antenna is therefore open for DC signals.
Do not apply force to dipole arms, as they are liable to bend. The soldered connections near the feedpoint may be damaged. After excessive mechanical stress or overheating, check the impedance characteristics to ensure that the internal matching network is not affected.

After long term use with 40W radiated power, only a slight warming of the dipole near the feedpoint can be measured.
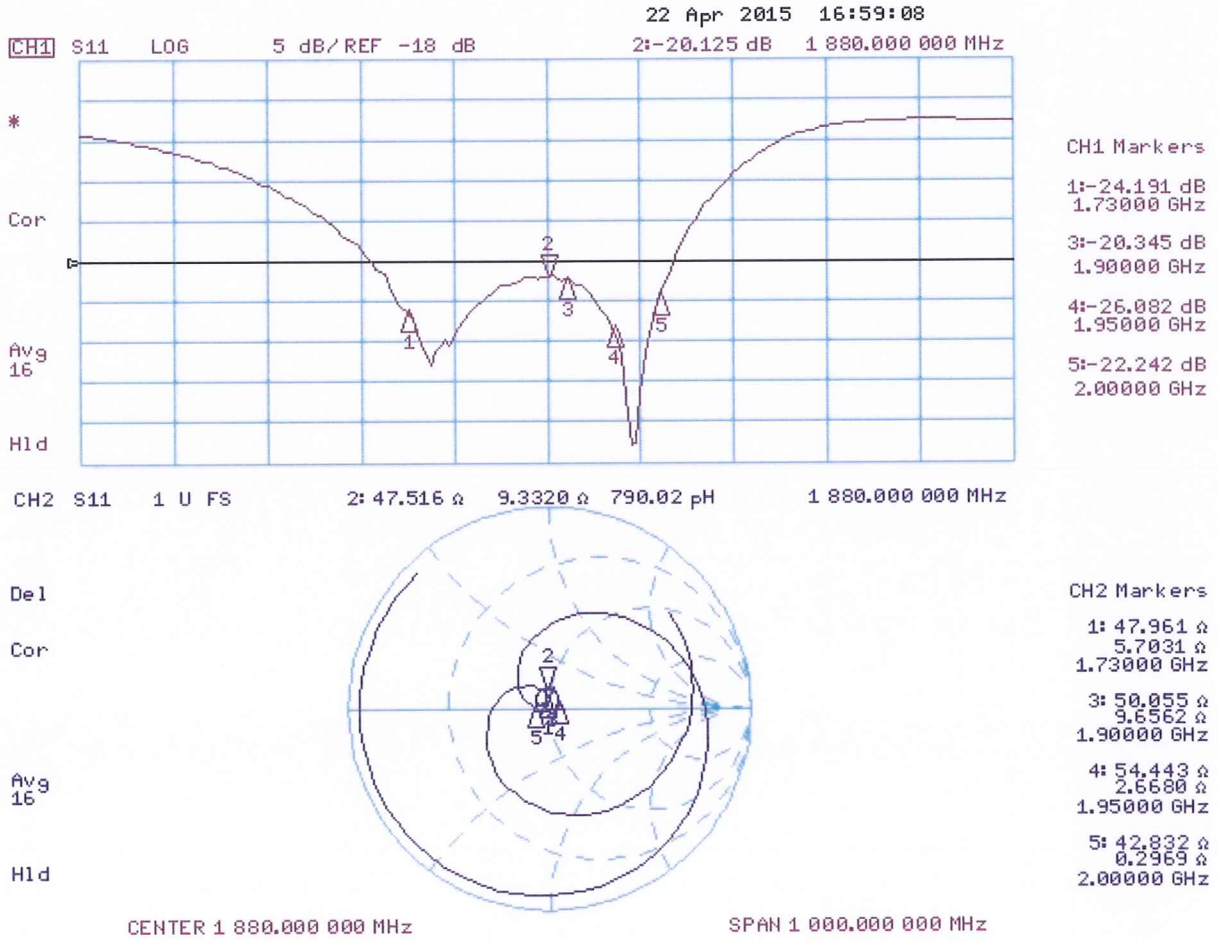
Impedance Measurement Plot