alcatel

MOVE TRACK

GPS Tracker

Quick Start Guide

CJB1GS0ALAAA

What’s In The Box

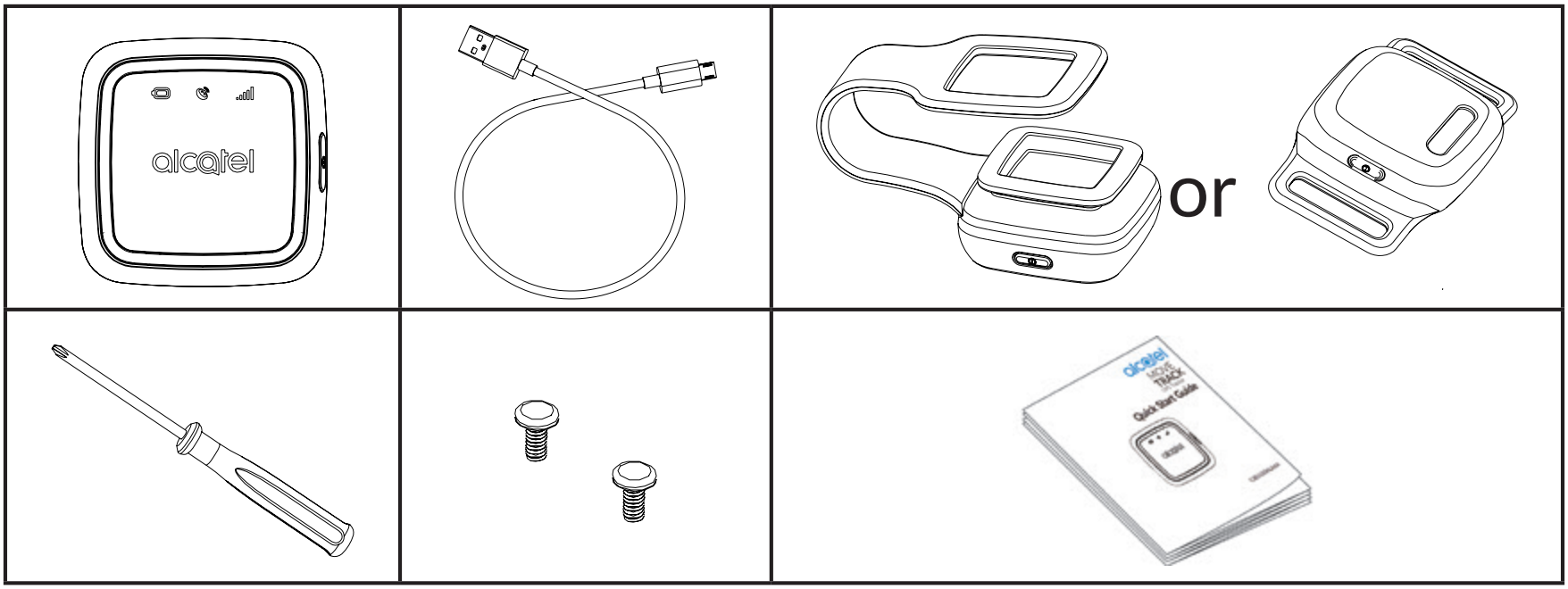

Please read this document carefully before using your device.

Inserting Your Nano-SIM

1. Remove the Nano-SIM cover using the supplied screwdriver.

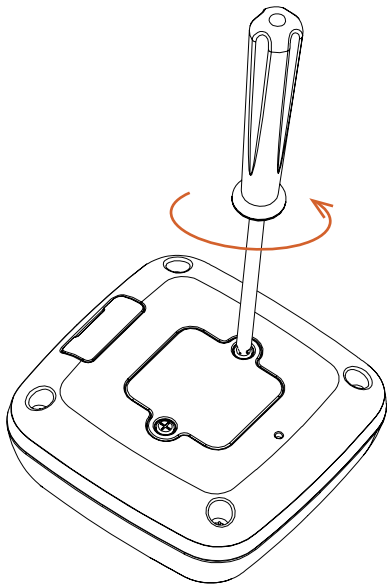

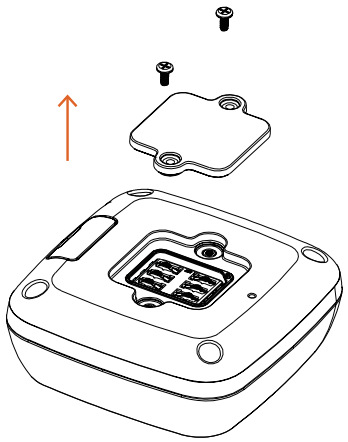

2. Insert your Nano-SIM.

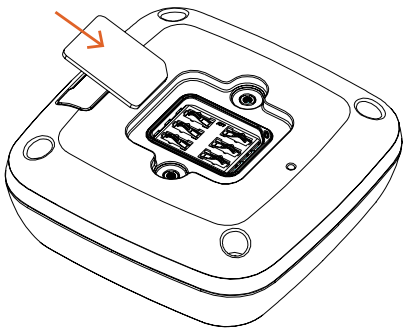

3. Replace the Nano-SIM cover and tighten the two screws.

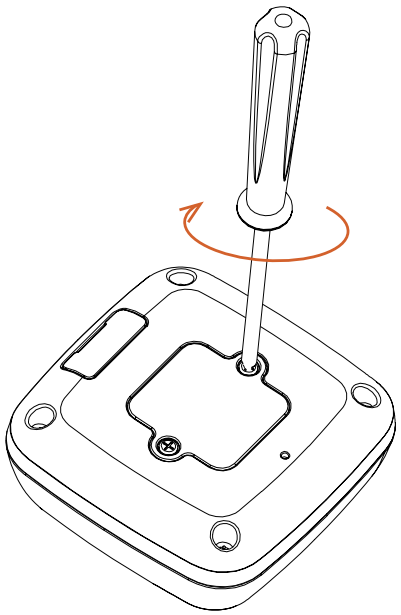

Device Overview

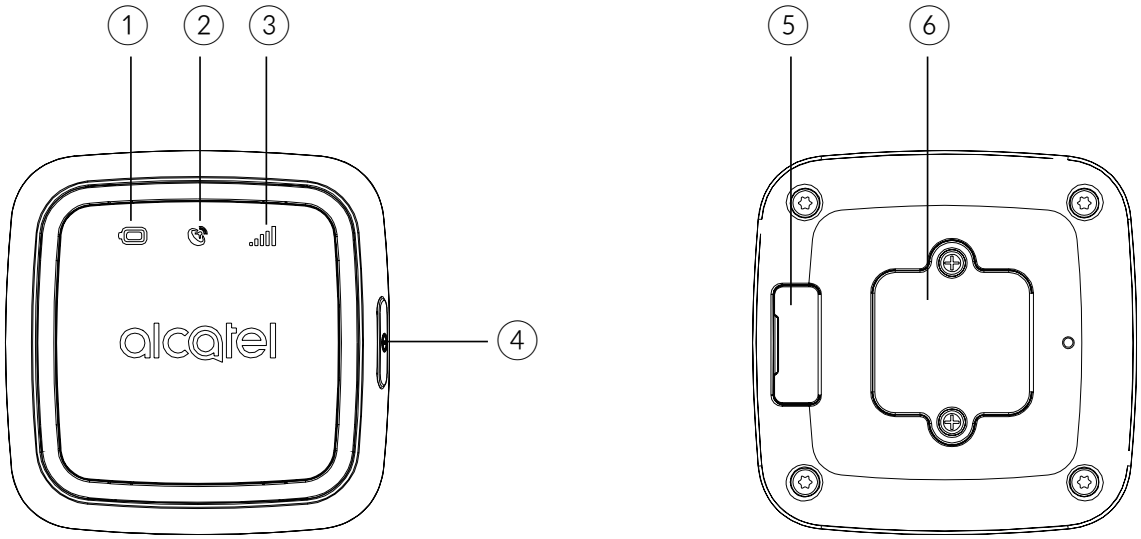

① Battery indicator

② GPS indicator

③ Network indicator

④ Power button

⑤ Micro-USB port

⑥ Nano-SIM Card cover

Category	Description
Battery indicator	• Blinks red during charging • Lights blue when fully charged • Lights red when battery level is low
GPS indicator	• Blinks red when searching for a GPS signal • Lights blue when your MOVETRACK has found its GPS location. • Lights red when your MOVETRACK is unable to find its GPS location
Network Indicator	• Lights blue when connected to the cellular data network. • Lights red when there is no network coverage (please ensure that your Nano-SIM is inserted correctly).
Power On/Off	• Press once to show battery/GPS/network status. • Press and hold for 3 seconds to turn on your MOVETRACK. • Press and hold for 3 seconds to turn off your MOVETRACK.

Category	Description
Micro-USB port	For charging and data transfer.
Nano-SIM card cover	Remove to access Nano-SIM.

Charging Your MOVETRACK

Plug the micro-USB cable into your MOVETRACK and connect it to a USB charger or any 1A/5V USB port.

- When charging, the battery light will blink red.
- The battery is fully charged when the battery light changes to blue.

Warning: Charge your MOVETRACK for at least 2 hours before first use.

Powering on Your MOVETRACK

Press and hold the power on/off button for 3 seconds, all LEDs will light up indicating that your MOVETRACK is now on and ready for use.
Note: Press and hold the power on/off button for 3 seconds to turn off your MOVETRACK.

Pairing with Your Smartphone

1. Download the MOVETRACK App using the appropriate QR code shown below, or alternatively search for 'MOVETRACK' on the App Store or on Google Play.

App Store QR CODE	Google Play QR CODE

2. Open the MOVETRACK App, register your account by following the in-app instructions, and log in.

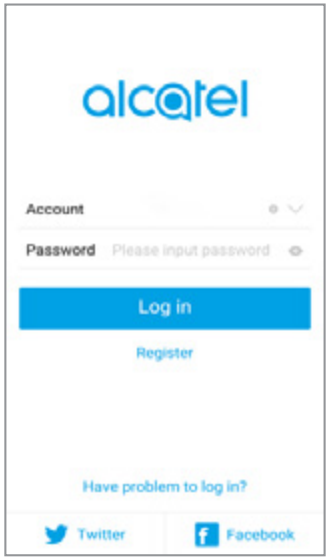

3. Select Select the option **I want to add a new tracker.**
4. Enter the unique identifier of your MOVETRACK (IMEI). The IMEI can be found on the back of your MOVETRACK.

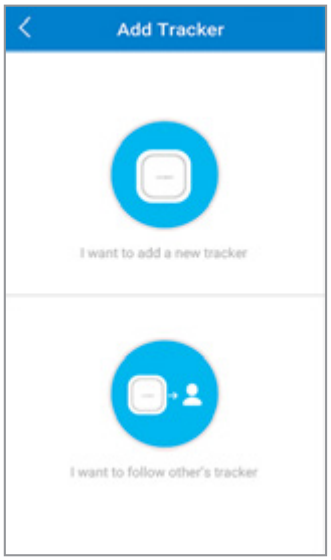

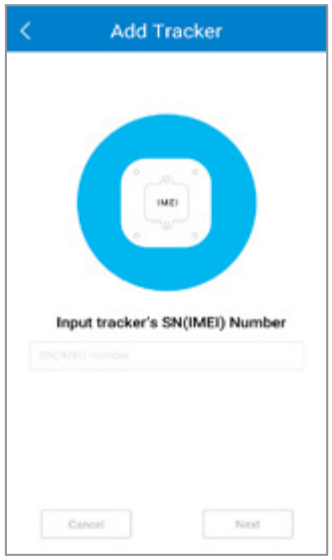

5. Enter your name and phone number.
6. Enter a profile picture as your icon. You can use the default image or a photo from your phone.
7. Enter a name and profile picture for your MOVETRACK. You can use the default image or a photo from your phone.
8. Your MOVETRACK and phone are now successfully paired.

Using your MOVETRACK

A luggage tag or a pet tag is included with your MOVETRACK.

Using the luggage tag

Unfasten the luggage tag and insert your MOVETRACK as shown below. Please ensure that you align the Power button on your MOVETRACK with the button on the side of the luggage tag.

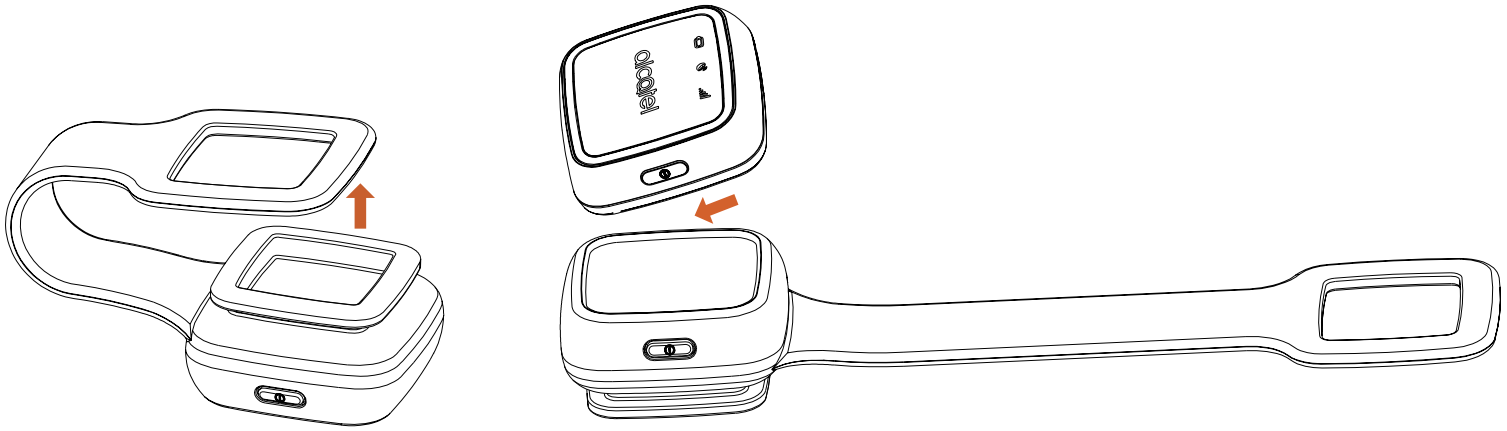

Using the pet tag

Insert your MOVETRACK into the pet tag as shown below. Please align the cut-out window so that the 3 notification icons are visible.

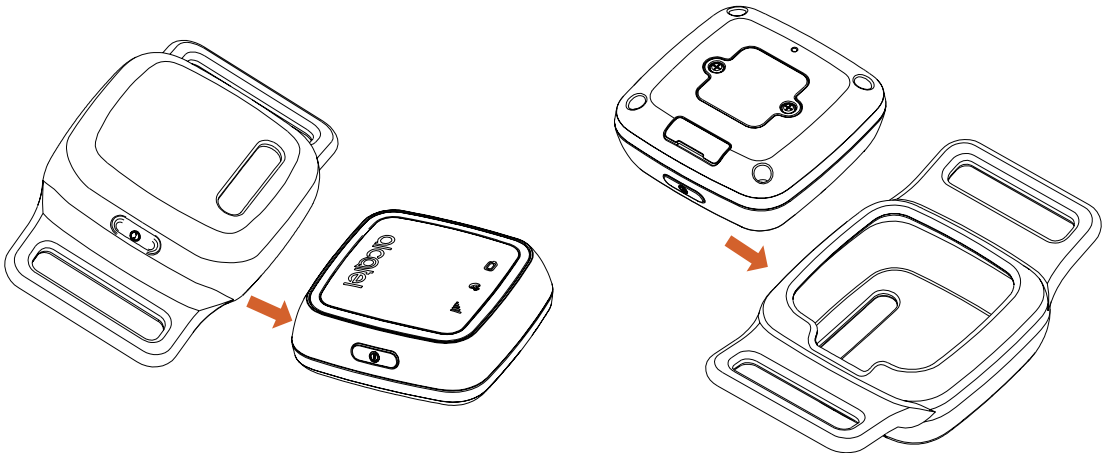

FAQ

1. **Are any of the materials used in this product harmful to children?**

   The material in use has passed all related safety testing for children, it is safe for daily use.

2. **Why is my MOVETRACK not charging?**

   If your MOVETRACK is not charging, follow the steps below:

   - Ensure that the metal charging contacts on the back of your watch are aligned correctly with the pins on the charging cradle.
   - Check that there is no dirt or corrosion on the metal charging contacts or the charging cradle pins.
   - Check that the pins on the charging cradle are intact.

3. **Can I make calls to my MOVETRACK?**

   Your MOVETRACK does not support voice calling.

4. **How many users can monitor my MOVETRACK simultaneously?**

   10 users can monitor your MOVETRACK at any one time. You can invite users by sharing the QR code on the **Invite User** page in the App.

5. How come I cannot obtain the position of my MOVETRACK?

- Please confirm your Nano-SIM card is enabled for data.
- Check if a Nano-SIM card is correctly inserted in your MOVETRACK.
- Check that your MOVETRACK's battery level.
- Ensure that your MOVETRACK has access to a clear signal.
- Switch your MOVETRACK off and on to restore service.

6. Why does it take so long to find my location?

Check which power-saving mode is selected. In manual mode, your MOVETRACK can only find your location when you press the button.

Note: If you enable the **Auto change to Manual** mode, your MOVETRACK will auto-switch to manual mode once the power level is less than 20%.

7. Is my MOVETRACK waterproof?

This device is rated to IP67 which can protect the MOVETRACK from splashing water. Do not wear your MOVETRACK whilst immersed under water for extended periods, for example whilst swimming, diving or bathing.

8. What do you use my personal data for?

Your personal data will not be used for advertising purposes, unless you have given us your express consent. Moreover, we will not transfer your personal data to any third parties without your express consent. The transfer of personal data to public institutions and public authorities that are entitled to receive such information, will only be carried out to the extent required by law or if we are obliged to do so by virtue of a court order or court ruling. If we commission third parties to provide certain services for us, such third parties will only have limited access to personal data, insofar as this is necessary to provide such services. Such third parties are bound to comply with the applicable data protection laws and our Privacy Policy while processing personal data.