HAC (T-Coil) Test Report

Application No.:	SUCR2605000414WM
Applicant:	TCL Communication Ltd.
Address of Applicant:	5/F, Building 22E, 22 Science Park East Avenue, Hong Kong Science Park, Shatin, NT, Hong Kong
Manufacturer:	TCL Communication Ltd.
Address of Manufacturer:	5/F, Building 22E, 22 Science Park East Avenue, Hong Kong Science Park, Shatin, NT, Hong Kong
EUT Description:	Mobile Phone
Model No.:	T451A, T450A ♣
♣	Please refer to summary of this report which indicates which model was actually tested and which were electrically identical.
FCC ID:	2ACCJB235
Standards:	ANSI C63.19-2019 CFR 47 FCC Part 20
Date of Receipt:	2026-05-06
Date of Test:	2026-05-08 to 2026-05-13
Date of Issue:	2026-05-29
Test Result:	**PASS ***

* In the configuration tested, the EUT detailed in this report complied with the standards specified above.

This document is issued by the Company subject to its General Conditions of Service printed overleaf, available on request or accessible at http://www.sgs.com/en/Terms-and-Conditions and, for electronic format documents, subject to Terms and Conditions for Electronic Documents at http://www.sgs.com/en/Terms-and-Conditions/Terms-e-Document. Attention is drawn to the limitation of liability, indemnification and jurisdiction issues defined therein. Any holder of this document is advised that information contained hereon reflects the Company's findings at the time of its intervention only and within the limits of Client's instructions, if any. The Company's sole responsibility is to its Client and this document does not exonerate parties to a transaction from exercising all their rights and obligations under the transaction documents. This document cannot be reproduced except in full, without prior written approval of the Company. Any unauthorized alteration, forgery or falsification of the content or appearance of this document is unlawful and offenders may be prosecuted to the fullest extent of the law. Unless otherwise stated the results shown in this test report refer only to the sample(s) tested and such sample(s) are retained for 30 days only.

Attention: To check the authenticity of testing / inspection report & certificate, please contact us at telephone:(86-755) 8307 1443, or email: CN.Doccheck@sgs.com

Revision Record			
Version	**Description**	**Date**	**Remark**
00	Original	2026-05-29	/

Authorized for issue by:		
		Leon Liu
		Leon Liu/ Project Engineer
		Nick Hu
		Nick Hu/ Reviewer

TEST SUMMARY

Frequency Band	HAC T-coil Test Results
GSM 850	PASS
PCS 1900	PASS
WCDMA band 2	PASS
WCDMA band 4	PASS
WCDMA band 5	PASS
LTE band 2	PASS
LTE band 4	PASS
LTE band 5	PASS
LTE band 7	PASS
LTE band 12	PASS
LTE band 13	PASS
LTE band 17	PASS
LTE band 26	PASS
LTE band 66	PASS
LTE band 38	PASS
LTE band 41	PASS
WLAN2.4GHz	PASS
HAC Results: PASS	

Remark:
This test report (Report No.: SUCR260500041401 issue on 2026-05-29) is based on the original test report (Report No.: SUCR250200006801 issue on 2026-02-14).
Review this report and original report, this report just changing the parts according to the declaration letter from client.
Considering to the difference, pre-scan were performed on the sample in this report to find the items which can be influential to the result in the original test report for fully retest.
Therefore in this report GSM1900, WCDMA Band IV, LTE Band 26/41 and WLAN2.4GHz data were performed based on the worst case of the original report with report number SUCR250200006801 issue on 2026-02-14 and other test data in this report are refer to the previous report with Report No.: SUCR250200006801 issue on 2026-02-14.

Please refer to section 6.2, 7.1, 7.2 and 7.3 of the report for the experimental values of this experiment.

Declaration of EUT Family Grouping:
Review this report and original report, this report just changing the parts according to the declaration letter from client.
The EUT and its below models: T451A, T450A are identical on circuitry design, PCB layout, internal wiring and functions, with difference on model number. All tests were performed on Model T451A.

CONTENTS

1 General Information 5
1.1 Introduction 5
1.2 Test Location 6
1.3 Test Engineer 6
1.4 Test Facility 6
1.5 General Description of EUT 7
1.5.1 DUT Antenna Locations 8
1.5.2 List of air interfaces/frequency bands 9
1.6 Test Specification 10
1.7 ANSI C63.19-2019 limits 10
2 Environmental Conditions 11
3 HAC (T-Coil) Measurement System 12
3.1 Measurement System Diagram for SPEAG Robotic 12
3.2 T-Coil Measurement 13
3.3 System Calibration 18
3.4 Audio Magnetic Probe AM1DV3 19
3.5 Test Arch 19
3.6 Phone Holder 19
3.7 AMCC- Audio Magnetic Calibration Coil 20
3.8 AMMI - Audio Magnetic Measurement Instrument 20
4 Measurement uncertainty evaluation 21
5 HAC (T-Coil) Measurement 22
5.1 T-Coil Performance Requirements 22
5.2 T-Coil measurement points and reference plane 24
5.3 T-Coil Measurement Procedure 25
6 T-Coil testing for CMRS Voice 26
6.1 General Description 26
6.2 GSM Tests Results 26
7 T-Coil testing for CMRS IP Voice 27
7.1 VoLTE Tests Results 27
7.2 VoWiFi Tests Results 28
7.3 T-Coil testing for OTT VoIP Application 29
8 Equipment list 30
9 Calibration certificate 31
10 Photographs 31
Appendix A: Detailed Test Results 31
Appendix B: Calibration certificate 31
Appendix C: Photographs 31

1 General Information

1.1 Introduction

The purpose of this standard is to provide tests and establish requirements for hearing aids and for WDs that allow a hearing aid user to effectively use a WD when both the hearing aid and WD meet the requirements of this standard. The various parameters required in order to demonstrate compatibility are measured. The design of the standard is such that when a hearing aid and a WD achieve the specified requirements, as measured by the methodology of this standard, the user of a hearing aid can effectively use a WD In order to provide for the usability of a hearing aid with a WD, several factors are coordinated, as follows:
a) The field strength emitted by a WD must not exceed the RF immunity of the hearing aid.
b) The T-Coil baseband H-field transmission of the WD must be compatible with the T-Coil mode of the hearing aid.
c) The magnetic noise from the WD in the T-Coil band must not degrade the reception quality to unacceptable levels.
Both the WD's RF and audio-band emissions are measured. Hence, the following measurements are made for the WDs:
a) RF amplitude modulation characteristics and power level or, optionally, near-field E-field emissions
b) T-Coil mode, magnetic signal strength in the audio band.
c) T-Coil mode, magnetic noise in the audio band
d) T-Coil mode, magnetic signal frequency response in the audio band
Corresponding to these quantities, the hearing aid is measured for the following:
1) RF immunity in microphone mode
2) RF immunity in T-Coil mode

1.2 Test Location

All tests were performed at:
SGS-CSTC Standards Technical Services (Suzhou) Co., Ltd.
South of No. 6 Plant, No. 1, Runsheng Road, Suzhou Industrial Park, Suzhou Area, China (Jiangsu) Pilot Free Trade Zone
No tests were sub-contracted.

1.3 Test Engineer

Test Engineer: Alger Du

1.4 Test Facility

The test facility is recognized, certified, or accredited by the following organizations:

• A2LA (Certificate No. 6336.01)

SGS-CSTC Standards Technical Services (Suzhou) Co., Ltd. is accredited by the American Association for Laboratory Accreditation (A2LA).

• FCC (Designation Number: CN1312)

SGS-CSTC Standards Technical Services (Suzhou) Co., Ltd. has been recognized as an accredited testing laboratory.

Test Firm Registration Number: 717327

•ISED (CAB Identifier: CN0120)

SGS-CSTC Standards Technical Services (Suzhou) Co., Ltd. has been recognized by Innovation, Science and Economic Development Canada (ISED) as an accredited testing laboratory.

Company Number: 27594

1.5 General Description of EUT

Device Type:	portable device		
Exposure Category:	uncontrolled environment / general population		
Product Name:	Mobile Phone		
Model No.(EUT):	T451A, T450A		
Product Phase:	production unit		
IMEI:	Sample 1: 358612602210932/358612602210940 Sample 2: 358612602210858/358612602210866		
Hardware Version:	V00		
Software Version:	451ADF19		
Antenna Type:	PIFA Antenna		
Test Mode Configuration:	GSM: GMSK, 8PSK;		
	WCDMA: QPSK,16QAM;		
	LTE: QPSK,16QAM,64QAM;		
	WIFI: DSSS, OFDM; BT: GFSK, π/4DQPSK,8DPSK		
GPRS Multi-slots Class:	12	**EGPRS Multi-slots Class:**	12
HSDPA UE Category:	24	**HSUPA UE Category**	7
Power Class	4, tested with power level 5(GSM850)		
	1, tested with power level 0(GSM1900)		
	3, tested with power control “all 1”(WCDMA Band)		
	3, tested with power control Max Power(LTE Band)		
Frequency Bands:	Band	Tx (MHz)	
	GSM 850	824 - 849	
	PCS 1900	1850 - 1910	
	WCDMA band 2	1850 -1910	
	WCDMA band 4	1710 -1755	
	WCDMA band 5	824 - 849	
	LTE band 2	1850 - 1910	
	LTE band 4	1710 - 1755	
	LTE band 5	824 - 849	
	LTE band 7	2500 - 2570	
	LTE band 12	699 - 716	
	LTE band 13	777 - 787	
	LTE band 17	704 - 716	
	LTE band 26	814 - 849	
	LTE band 38	2570 - 2620	
	LTE band 41	2496 - 2690	
	LTE band 66	1710 - 1780	
	WLAN2.4GHz	2412~2462	
	Bluetooth	2402~2480	
Battery 1 Information:	Model:	TLp049LB	
	Normal Voltage:	3.87V	
	Rated capacity:	5010mAh	
	Manufacturer:	TCL	
Battery 2 Information:	Model:	TLp049L9	
	Normal Voltage:	3.87V	
	Rated capacity:	5010mAh	
	Manufacturer:	TCL	

Note:
Since the above data and/or information is provided by the client relevant results or conclusions of this report are only made for these data and/or information, SGS is not responsible for the authenticity, integrity and results of the data and information and/or the validity of the conclusion.

1.5.1 DUT Antenna Locations

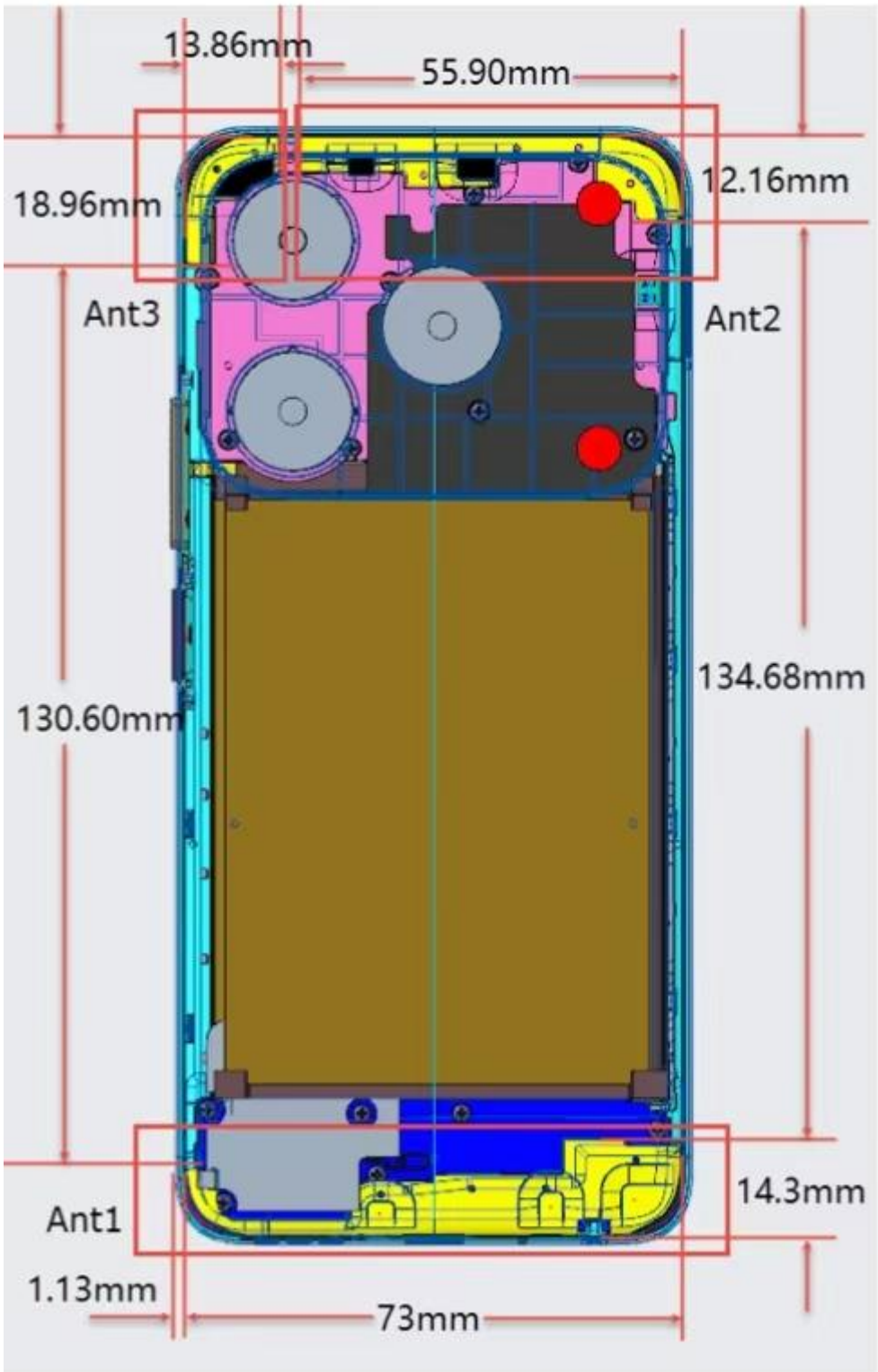

1.5.2 List of air interfaces/frequency bands

Air Interface	Band (MHz)	Type	ANSI C63.19 Tested	Simultaneous Transmitter	Name of Voice Service	Power Reduction
GSM	GSM850	VO	Yes	BT, Wi-Fi	CMRS Voice	NO
	GSM1900					
	EDGE	VD	Yes		Google Meet*	
WCDMA	Band II	VO	Yes	BT, Wi-Fi	CMRS Voice	NO
	Band IV					
	Band V					
	HSPA	VD	NO		Google Meet*	
LTE FDD	LTE band 2	VD	Yes	BT, Wi-Fi	VoLTE Google Meet*	NO
	LTE band 4					
	LTE band 5					
	LTE band 7					
	LTE band 12					
	LTE band 13					
	LTE band 17					
	LTE band 25					
	LTE band 26					
	LTE band 66					
LTE TDD	LTE band 38	VD	Yes	BT, Wi-Fi	VoLTE Google Meet*	NO
	LTE band 41					
Wi-Fi	2437	VD	Yes	WWAN	Google Meet*	NO
BT	2437	DT	No(1)	WWAN	NA	NO

VO: Legacy Cellular Voice Service
DT: Digital Transport (no voice)
VD: IP Voice Service over Digital Transport
*ANSI C63.19-2019 use table 6.1 to establish the Normal speech input level and NOTE 2 of table 6.1 identifies the group of VoIP voice services that use −20 dBm0 as the normal speech input level.
Remark:
1. Because features of Google Meet allow the option of voice-only communications, Meet has been tested for HAC/T-Coil compatibility to ensure the best user experience.
2. The Google Meet and google Fi the audio path, parameter and audio codec are all the same, therefore, the Google Meet is evaluation for this device to show compliance.

1.6 Test Specification

Identity	Document Title
CFR 47 FCC Part 20	§20.19 Hearing aid-compatible mobile handsets.
ANSI C63.19-2019	American National Standard for Methods of Measurement of Compatibility between Wireless Communication Devices
KDB 285076 D01	HAC Guidance v06r04
KDB 285076 D02	T-Coil testing v04

1.7 ANSI C63.19-2019 limits

GSM operating modes:

- The primary group shall include at least 25 measurement points.
- The secondary group shall include at least 125 contiguous measurement points.

Non-2G GSM operating modes:

- The primary group shall include at least 75 measurement points.
- The secondary group shall include at least 300 contiguous measurement points

Additionally, to avoid an oddly shaped area of low noise, the secondary group shall include at least one longitudinal column of at least 10 contiguous qualifying points and at least one transverse row containing at least 15 contiguous qualifying points.

2 Environmental Conditions

Temperature	Min. = 18°C, Max. = 25 °C
Relative humidity	Min. = 30%, Max. = 70%

Table 1： The Ambient Conditions

3 HAC (T-Coil) Measurement System

3.1 Measurement System Diagram for SPEAG Robotic

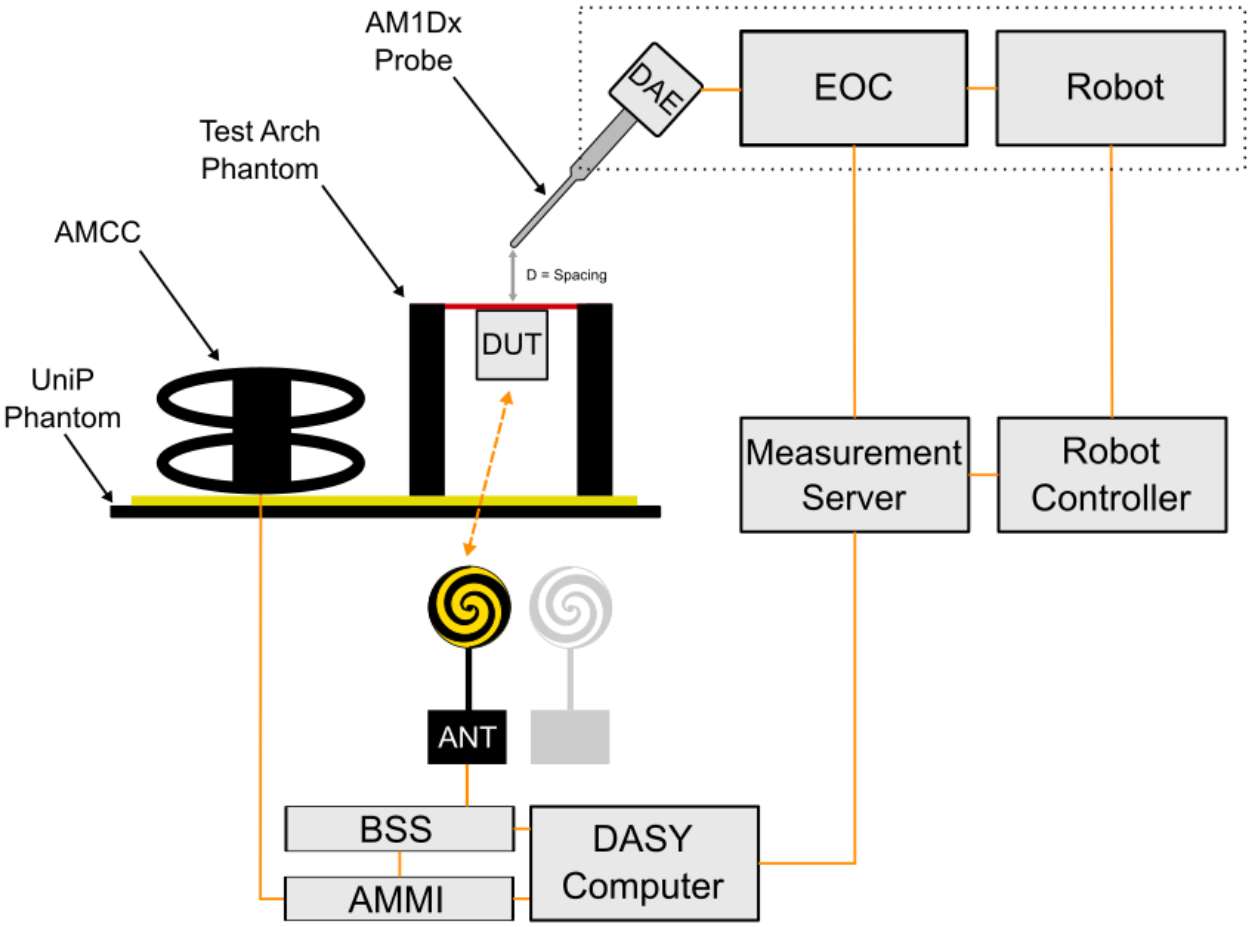

Fig. 1. The SPEAG Robotic Diagram

The DASY system for performing compliance tests consists of the following items:

- A standard high precision 6-axis robot (Stabile RX family) with controller, teach pendant and software. An arm extension is for accommodating the data acquisition electronics (DAE).
- An Audio Magnetic probe.
- A data acquisition electronics (DAE) which performs the signal amplification, signal multiplexing, AD-conversion, offset measurements, mechanical surface detection, collision detection, etc. The unit is battery powered with standard or rechargeable batteries. The signal is optically transmitted to the EOC.
- The Electro-optical converter (EOC) performs the conversion between optical and electrical of the signals for the digital communication to the DAE and for the analog signal from the optical surface detection. The EOC is connected to the measurement server.
- The function of the measurement server is to perform the time critical tasks such as signal filtering, control of the robot operation and fast movement interrupts.
- A probe alignment unit which improves the (absolute) accuracy of the probe positioning.
- A computer operating Windows system.
- DASY software.
- Remote control with teach pendant and additional circuitry for robot safety such as warning lamps, etc.
- The Test Arch SAM phantom
- The device holder for handheld mobile phones.
- Validation dipole kits allowing to validate the proper functioning of the system.

3.2 T-Coil Measurement

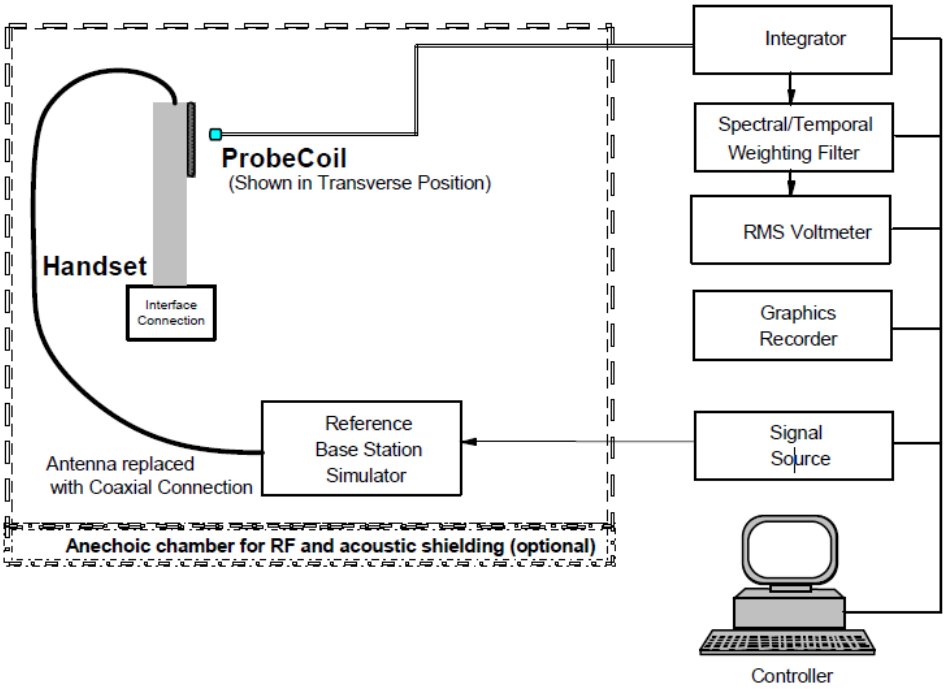

Fig. 2. T-coil signal measurement test setup-in call method

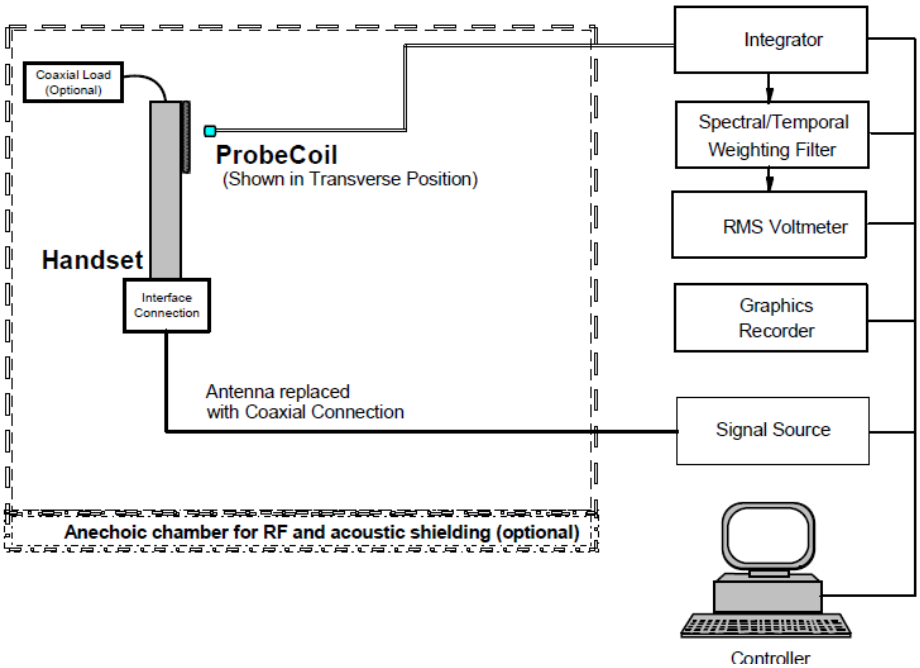

Fig. 3. T-coil signal measurement test setup-test mode method.

The reference axis is normal to the reference plane and passes through the center of the acoustic output (or the center of the whole array); or may be centered on or near a secondary inductive source. The actual location of the reference axis and resultant measurement area shall be noted in the test report.
The measurement area shall be 50 mm by 50 mm. The measurement area for both desired ABM signal and undesired ABM field may be located where the transverse magnetic measurements are optimum with regard to the requirements. However, the measurement area should be in the vicinity of the acoustic output of the WD and shall be in the same half of the phone as the WD receiver. In a WD handset with a centered receiver and a circularly symmetrical magnetic field, the measurement axis and the reference axis would coincide.
Measurements of desired ABM signal strength and undesired ABM field are made at 2.0 mm +0.5 mm or 4 mm intervals in an X-Y measurement area patter over the entire measurement area (676 measurement points total); either all measured or measured plus interpolated.

Note.
#. The EUT do not use the special HAC SW.
#. Setting the maximum volume for EUT during the measurement.
#. For the measurement, it doesn't use the "post-test measurement processing of results".
#. Per KDB 285076 D01 v06r04, handsets that that have the ability to support concurrent connections using simultaneous transmissions shall be independently tested for each air interface/band given in ANSI C63.19-2019. At the present time ANSI C63.19 does not provide simultaneous transmission test procedures.

Define the all applicable input audio level as below according to c63 and KDB 285076 D02v04：
GSM input Level: -16dB
UMTS input Level: -16dB
VOLTE input Level: -16dB
VOWIFI input Level: -16dB
VONR input Level: -16dB
OTT input Level: -20dB
For GSM/UMTS/VoLTE/VOWIF test setup and input level, the correct input level definition is via a communication tester CMW500 "Decoder Cal" and "Codec Cal" to set the correct audio input levels.
For VONR test setup and input level, the correct input level definition is via a communication tester CMX500 and External DAU USB sound card "Decoder Cal" and "Codec Cal" to set the correct audio input levels.
CMW500 and External DAU USB sound card is able to output 1 kHz audio signal equivalent to 3.14dBm0 at "Decoder Cal". configuration, the signal reference is used to adjust the AMMI gain setting to reach-16Bm0 for GSM/UMTS/VoLTE/VONR. CMW500/CMX500 input is calibrated and the relation between the analog input voltage and the internal level in dBm0 can be determined.

3.2.1 Define the input level for GSM/UMTS/LTE/WLAN

1. The Required gain factor for the specific signal shall typically be multiplied by this factor to achieve approx. The same level as for the 1kHz signal.
2. The calculation formula below is an example and shows how to determine the input level for the device.

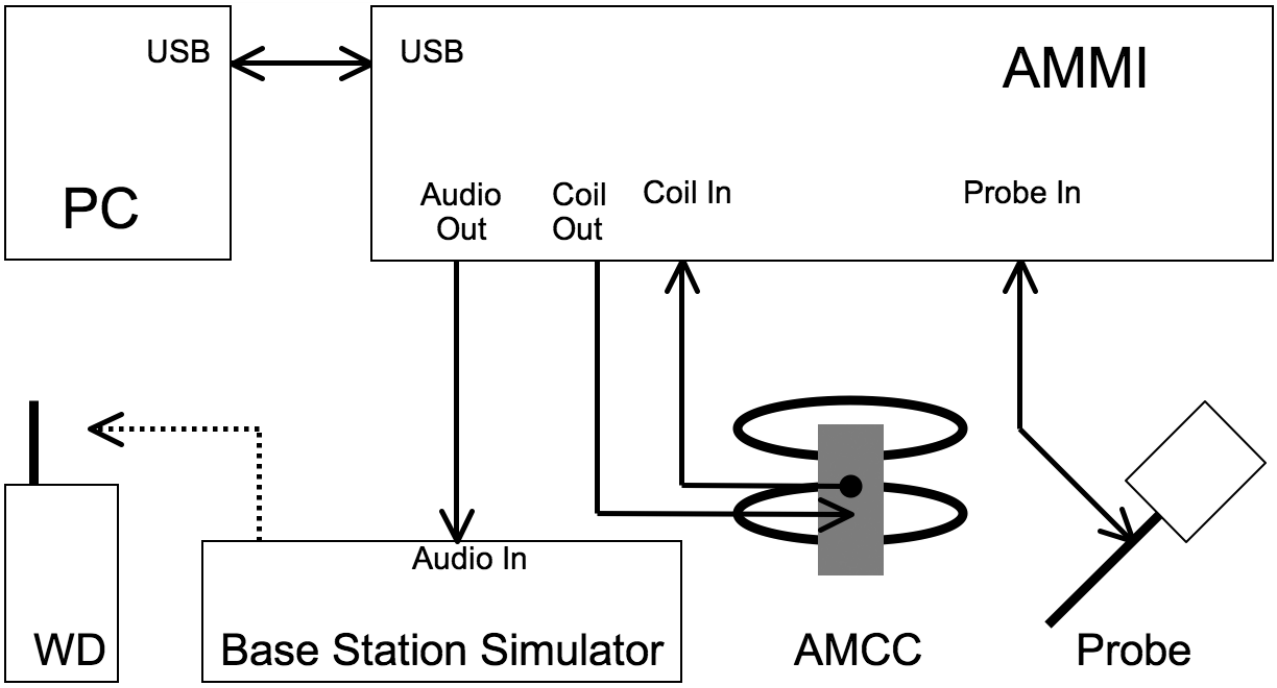

Fig. 2. T-coil signal measurement test setup

The predefined signal types have the following differences / factors compared to the 1kHz sine signal:

Signal [file name]	Duration [s]	Peak-to-RMS [dB]	RMS [dB]	Required gain factor *)	Gain setting
1kHz sine	---	3.0	0.0	1.00	
48k_1.025kHz_10s.wav	10	3.0	0.0	1.00	
48k_1kHz_3.15kHz_10s.wav	10	6.0	-3.0	1.42	
48k_315Hz_1kHz_10s.wav	10	6.0	-2.9	1.40	
48k_csek_8k_441_white_10s.wav	10	13.8	-10.5	3.34	
48k_multisine_50-5000_10s.wav	10	11.1	-7.9	2.49	
48k_voice_1kHz_1s.wav	1	16.2	-12.7	4.33	
48k_voice_300-3000_2s.wav	2	21.6	-18.6	8.48	

(*) The gain for the specific signal shall typically be multiplied by this factor to acheive approx. the same level as for the 1kHz sine signal.

Insert the gain applicable for your setup in the last column of the table.

Input Level for GSM/UMTS/VoLTE/VOWIFI

Gain Value	dBm0	Full scal Voltage	dB	AMMI audio out dBv (RMS)	AMCC Coil Out (dBv (RMS)
	3.14	1.5		0.55	
100	5.53		40	2.94	3.09
8.39	-16		18.47		-18.44
Signal Type	**Duration (s)**	**Peak to RMS (dB)**	**RMS (dB)**	**Gain Factor**	**Gain Setting**
1kHz sine	-	3	0	1	8.39
48k_voice_1kHz	1	15.74	-12.7	4.33	36.32
48k_voice_300-3000	2	21.57	-18.6	8.48	71.13

Define the input level for OTT.

1. The Required gain factor for the specific signal shall typically be multiplied by this factor to achieve approx. The same level as for the 1kHz signal.
2. The calculation formula below is an example and shows how to determine the input level for the device.

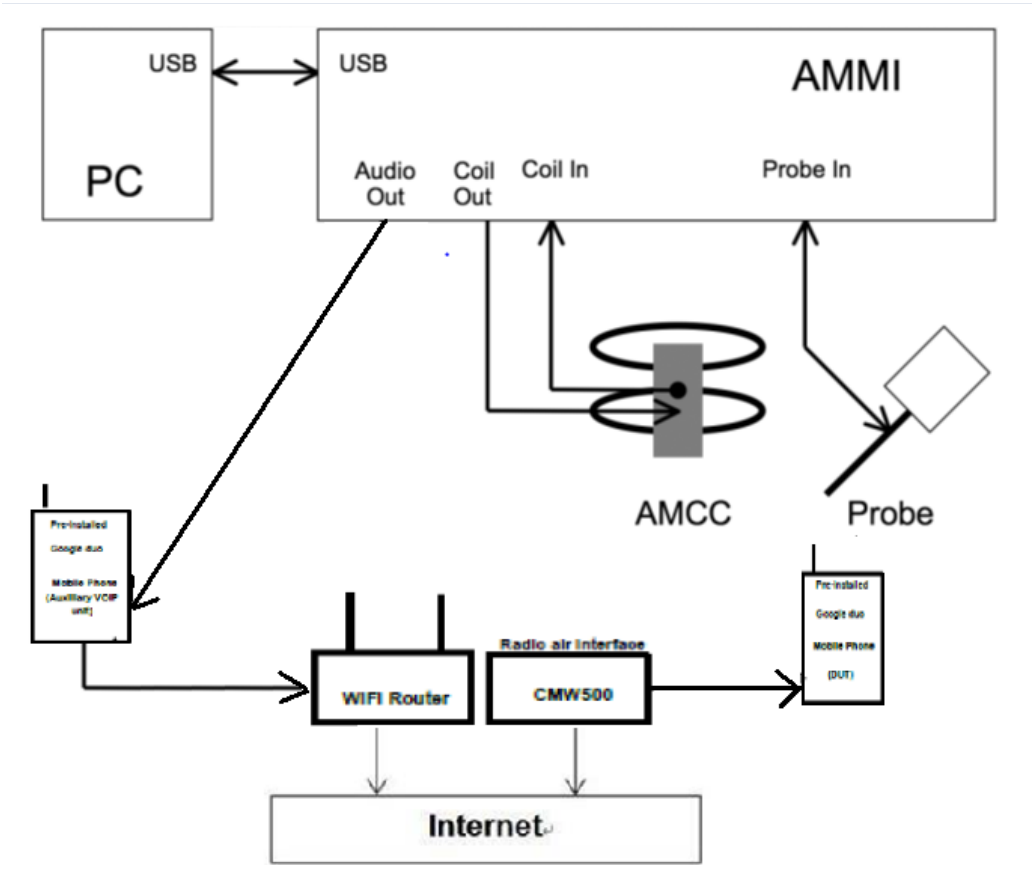

Fig. 2. T-coil signal measurement test setup

#. Voice over Internet Protocol (VoIP) such as Google Meet application, also called IP telephony, is a methodology and group of technologies for the delivery of voice communications and multimedia sessions over Internet Protocol (IP) networks, such as the Internet. The terms Internet telephony, broadband telephony, and broadband phone service specifically refer to the provisioning of communications services (voice, fax, SMS, voice-messaging) over the public Internet, rather than via the public switched telephone network (PSTN)

#. The Google Meet service support code and bitrate are list in section9, the customized Google Meet software is installed on a mobile phone which is used as the Auxiliary for the test. The software enables audio coding rate to be changed, and reports the input digital audio level before audio processing which can be used to calibrate the input audio level

.#. This device comes with the preinstalled VoIP application that supports the Google Meet service and related codec. The test configuration establishes a call between the device under test and an auxiliary handset via the Google Meet server

#. The test setup used for Google Meet VoIP call is via the data application unit on the 2G/3G/4G/5G/WiFi simulate base station, connected to the internet via the Google Meet server to the auxiliary device. The auxiliary device runs special software that allows the codecs and bit rate to be fixed to a specific value. Please refer to section9, an assessment was made of each of the different codec bit rates to determine the worst case for each of the different OTT transport (WiFi, LTE, GSM, WCDMA,NR)

#. The auxiliary device includes software that displays the audio level in dBFS which allows calibration of the system to establish the -16dBm0 reference level. After establishing the voice call between auxiliary device and device under test the audio output from the AMMI is injected into the auxiliary device. The gain factor to establish a reference level of -16dBm0 for use during the test is determined as detailed in the next page based on the 0dBFull Scale (0dBFS) value being equivalent to 3.14dBm0.

Input Level for OTT

Gain Value	20* log(gain)	AMCC Coil Out	Level
(linear)	dB	(dBv RMS)	dBm0
		0.533	3.14
10	20	-18.39	-15.78
9.75	19.78	-22.61	-20

Signal Type	Duration (s)	Peak to RMS (dB)	RMS (dB)	Gain Factor	Gain Setting
1kHz sine	-	3	0	1	9.75
48k_voice_1kHz	1	15.74	-12.7	4.33	42.23
48k_voice_300-3000	2	21.57	-18.6	8.48	82.71

3.3 System Calibration

For correct and calibrated measurement of the voltages and ABM field, DASY will perform a calibration job as below.

In phase 1, the audio output is switched off, and a 200 mVpp symmetric rectangular signal of 1 kHz is generated and internally connected directly to both channels of the sampling unit (Coil in, Probe in).

In phase 2, the audio output is off, and a 20 mVpp symmetric 100 Hz signal is internally connected. The signals during phases 1 and 2 are available at the output on the rear panel of the AMMI. However, the output must not be loaded, in order to avoid influencing the calibration. An RMS voltmeter would indicate 100 mVRMS during the first phase and 10 mVRMS during the second phase. After the first two phases, the two input channels are both calibrated for absolute measurements of voltages. The resulting factors are displayed above the multi-meter window.

After phases 1 and 2, the input channels are calibrated to measure exact voltages. This is required to use the inputs for measuring voltages with their peak and RMS value.

In phase 3, a multi-sine signal covering each third-octave band from 50 Hz to 10 kHz is generated and applied to both audio outputs. The probe should be positioned in the center of the AMCC and aligned in the z-direction, the field orientation of the AMCC. The “Coil In” channel is measuring the voltage over the AMCC internal shunt, which is proportional to the magnetic field in the AMCC. At the same time, the “Probe In" channel samples the amplified

signal picked up by the probe coil and provides it to a numerical integrator. The ratio of the two voltages in each third-octave filter leads to the spectral representation over the frequency band of interest. The Coil signal is scaled in dBV, and the Probe signal is first integrated and normalized to show dB A/m. The ratio probe-to-coil at the frequency of 1 kHz is the sensitivity which will be used in the consecutive T-Coil jobs.

3.4 Audio Magnetic Probe AM1DV3

Description	Active single sensor probe for both axial and radial measurement scans- Fully RF shielded, compatible with DAE, with adapted probe cup	AM1DV3 Audio Probe
Dynamic Range	0.1 KHz to 20 KHz	
Sensitivity	<-50dB A/m @ 1KHz	
Internal Amp	20dB	
Dimensions	300X18mm	

3.5 Test Arch

Description	Enables easy and well defined positioning of the phone and validation dipoles as well as simple teaching of the robot.	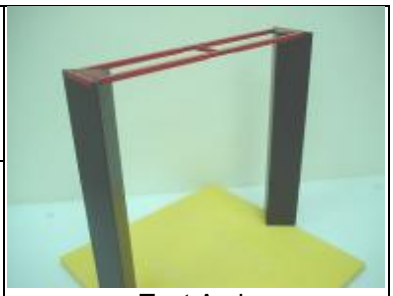 Test Arch
Dimensions	length: 370 mm width: 370 mm height: 370 mm	

3.6 Phone Holder

Description	Supports accurate and reliable positioning of any phone Effect on near field <+/- 0.5 dB	Phone Holder

3.7 AMCC- Audio Magnetic Calibration Coil

Description	Allows calibration of the complete measurement setup, the two horizontal coils create a homogeneous magnetic field in the z direction. Refer to Appendix 5 for more detail on AMCC coil	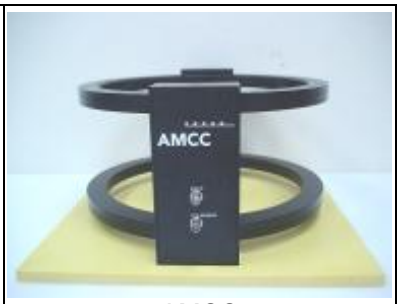 AMCC

3.8 AMMI - Audio Magnetic Measurement Instrument

Description	-USB interface to PC - Probe signal digitization and power supply- Test signal generation for wireless device (via base station simulator)- Auto-calibration and interfaces to AMCC for complete setup-calibration	AMMI
Data Rate	48 KHz / 24bit	
Dynamic Range	85 dB	
Dimensions:	19” X 65 X 270mm	

4 Measurement uncertainty evaluation

Error Description	Uncertainty Value (%)	Probability Dist.	Divisor	ci ABM1	ci ABM2	Standard Uncertainty ABM1 (%)	Standard Uncertainty ABM2 (%)
Related to probe sensitivity							
Reference level	±3.0	R	$\sqrt{3}$	1	1	±3.0	±3.0
AMCC geometry	±0.4	R	$\sqrt{3}$	1	1	±0.2	±0.2
AMCC current	±0.6	R	$\sqrt{3}$	1	1	±0.4	±0.4
Probe positioning during calibration	±0.2	R	$\sqrt{3}$	1	1	±0.1	±0.1
Noise distribution	±0.7	R	$\sqrt{3}$	0.0143	1	±0.0	±0.4
Frequency slope	±5.9	R	$\sqrt{3}$	0.1	1	±0.3	±3.5
Related to probe system							
Repeatability / drift	±1.0	R	$\sqrt{3}$	1	1	±0.6	±0.6
Linearity / dynamic range	±0.6	N	1	1	1	±0.4	±0.4
Audio noise	±1.0	R	$\sqrt{3}$	0.1	1	±0.1	±0.6
Probe angle	±2.3	R	$\sqrt{3}$	1	1	±1.4	±1.4
Spectral Processing	±0.9	R	$\sqrt{3}$	1	1	±0.5	±0.5
Integration time	±0.6	N	1	1	5	±0.6	±3.0
Field distribution	±0.2	R	$\sqrt{3}$	1	1	±0.1	±0.1
Test signal							
Reference signal spectrum response	±0.6	R	$\sqrt{3}$	0	1	±0.0	±0.4
Positioning							
Probe positioning	±1.9	R	$\sqrt{3}$	1	1	±1.1	±1.1
Phantom Thickness	±0.9	R	$\sqrt{3}$	1	1	±0.5	±0.5
DUT positioning	±1.9	R	$\sqrt{3}$	1	1	±1.1	±1.1
External Contributions							
RF interference	±0.0	R	$\sqrt{3}$	1	0.3	±0.0	±0.0
Test Signal Variation	±2.0	R	$\sqrt{3}$	1	1	±1.2	±1.2
Combined Std. Uncertainty (ABM Field)	$u_c^{'} = \sqrt{\sum_{i=1}^{20} c_i^2 u_i^2}$					±4.1	±6.2
Expanded Std. Uncertainty (K=2)						±8.2	±12.4

Table 2: Measurement uncertainties for T-Coil

5 HAC (T-Coil) Measurement

5.1 T-Coil Performance Requirements

In order to be rated for T-Coil use, a WD shall meet the requirements for signal level and signal quality contained in this part.

1) T-Coil coupling field intensity
When measured as specified in ANSI C63.19, the T-Coil signal shall be ≥ –18 dB (A/m) at 1 kHz, in a 1/3 octave band filter for all orientations.

2) Frequency response
The frequency response of the axial component of the magnetic field, measured in 1/3 octave bands, shall follow the response curve specified in this sub-clause, over the frequency range 300 Hz to 3000 Hz. Figure 1 and Figure 2 provide the boundaries for the specified frequency.
These response curves are for true field strength measurements of the T-Coil signal. Thus the 6 dB/octave probe response has been corrected from the raw readings.

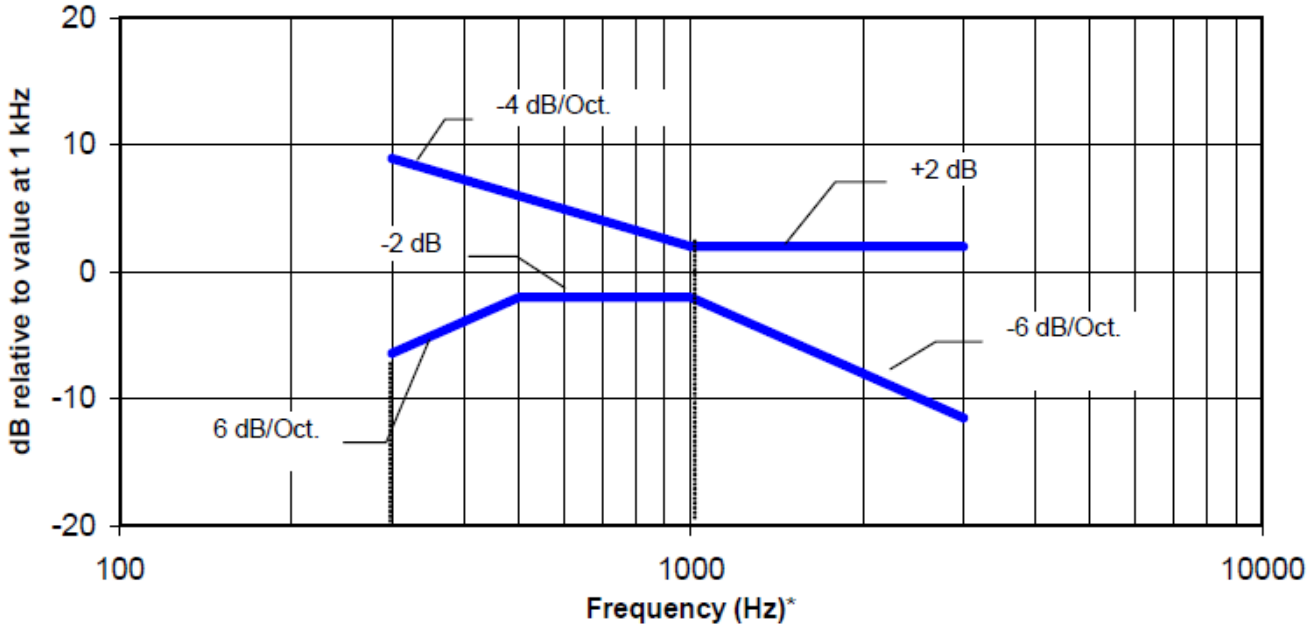

Figure 1—Magnetic field frequency response for WDs with a field ≤ –15 dB (A/m) at 1 kHz

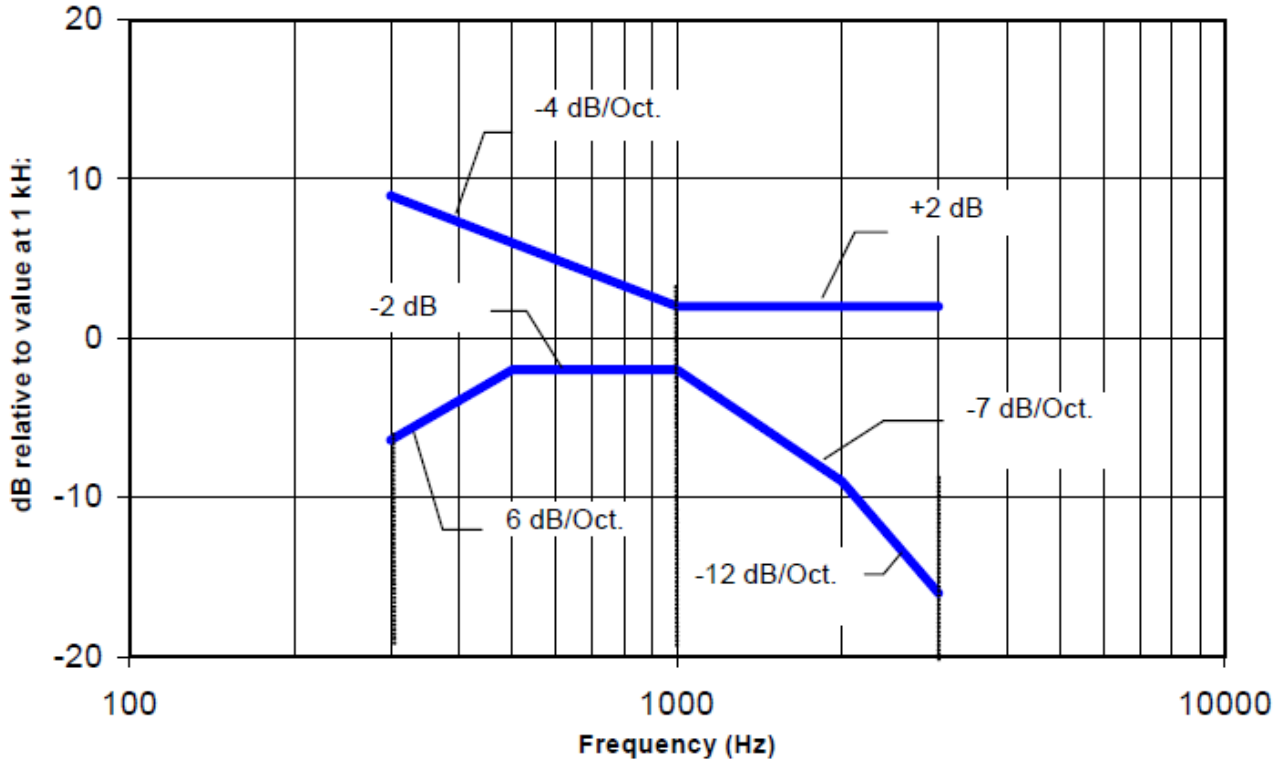

Figure 2 —Magnetic field frequency response for WDs with a field that exceeds –15dB(A/m) at 1 kHz

5.2 T-Coil measurement points and reference plane

Figure 3 illustrate the references and reference plane that shall be used in a typical EUT emissions measurement. The principle of this section is applied to EUT with similar geometry. Please refer to Appendix C for the setup photographs.

- The area is 5 cm by 5 cm.
- The area is centered on the audio frequency output transducer of the EUT.
- The area is in a reference plane, which is defined as the planar area that contains the highest point in the area of the phone that normally rests against the user's ear. It is parallel to the centerline of the receiver area of the phone and is defined by the points of the receiver-end of the EUT handset, which, in normal handset use, rest against the ear.
- The measurement plane is parallel to, and 10 mm in front of, the reference plane.

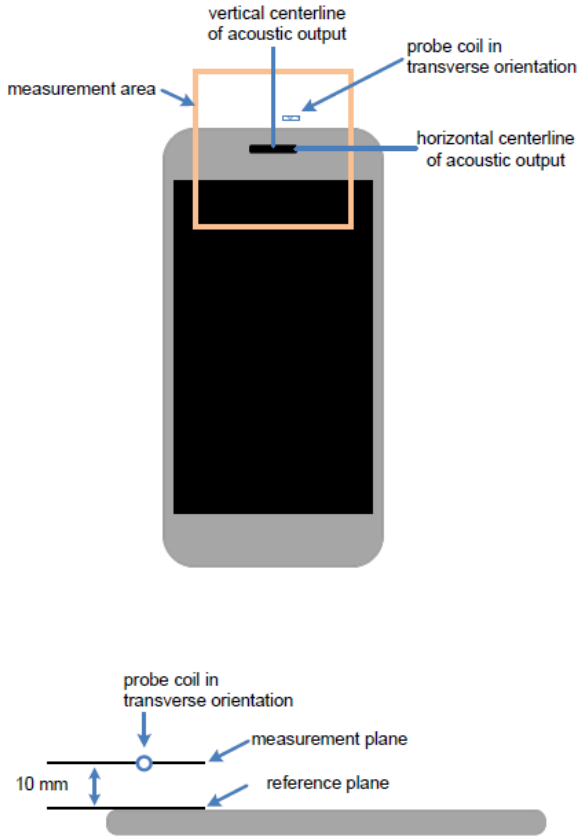

Figure A.4—Measurement and reference planes probe orientation for WD audio frequency magnetic field measurements

Figure 3 Axis and planes for WD audio frequency magnetic field measurements

5.3 T-Coil Measurement Procedure

According to ANSI C63.19-2019, section4:
This subclause describes the procedures used to measure the ABM (T-Coil) performance of the WD. Measurements shall be performed over a measurement area 50 mm square, in the measurement plane, as specified in A.3. The measurement area shall be scanned with a uniform measurement point spacing of 2.0 mm ± 0.5 mm in each X=Y axis of the plane, yielding 676 measurement points with approximately even spacing throughout the area.

Optionally, measurement point spacing may be increased to 4 mm, with interpolation employed to yield the required 676 equivalent measurement points distributed uniformly over the 50 mm square measurement area. Interpolated points shall be derived from the average of the linear representations of the field strengths of the nearest two or four equidistant measured points. The area of measurement is increased to a 52 mm square so that edge rows and columns of the required 50 mm square can be either measured or interpolated with none extrapolated.

In order to assure that the required signal quality is measured, the measurement of the intended signal and the measurement of the unintended signal shall be made at the same locations. Measurements shall not include undesired influence from the WD's RF field; therefore, use of a coaxial connection to a base station simulator or non-radiating load might be necessary. However, even then with a coaxial connection to a base station simulator or non-radiating load there could still be RF leakage from the WD, which could interfere with the desired measurement. Pre-measurement checks should be made to avoid this possibility. Al measurements shall be done with the WD operating on battery power with an appropriate normal speech audio signal input level given in Table 6.1. If the device display can be turned off during a phone call, then that may be done during the measurement as well. If tested with the display in the off state this shall be documented in the test report.

Measurements shall be performed with the probe coil oriented in the transverse direction, aligned in the plane of the measurement area and perpendicular to the long dimension of the WD. A multi-stage sequence consists of first measuring the field strength of the desired T-Coil signal (desired ABM signal) that is useful to a hearing aid.

T-Coil at each specified measurement point. The undesired magnetic component (undesired ABM field) is then measured in the same transverse orientation at each of the same measurement point.

The following steps summarize the basic test flow for determining desired ABM signal and undesired ABM field. These steps assume that a sine wave or narrowband 1/3 octave signal can be used for the measurement of desired ABM signal level.

To minimize the need to test every WD operating mode to the telecoil requirements of Clause 6, it is permissible to exclude some subset of supported configurations. For a given WD, every mode that supports voice communication shall be considered for telecoil testing. However, if it can be demonstrated that a certain configuration will not be the worst-case telecoil configuration, such configurations may be excluded from the fall telecoil scans of 6.4.}4 For example, operating modes may be pre-screened by scanning for both desired ABM signal and undesired ABM field at a lower measurement point density than the final scans, thus saving considerable testing time by eliminating configurations that are excellent performers from more detailed testing for worst-case.

Many factors could affect telecoil test results. RF power level and amplitude modulation characteristics as well as the specific current paths within the WD associated with the RF output stage(s), the display, and processing circuitry could affect the undesired ABM field. Audio codec implementation and acoustic receiver characteristies could also affect the desired ABM signal).

6 T-Coil testing for CMRS Voice

6.1 General Description

1. Codec Investigation:

This clause describes the measurement of the baseband (audio frequency) magnetic T-Coil signal from a WD. The goal is to evaluate the size of the area where a user could position their WD relative to their hearing aid's telecoil and receive an acceptable magnetically coupled signal. Three quantities are measured and evaluated. The first is the field strength of the desired signal at the center of the audio band (desired ABM signal). The second is the frequency response of the desired signal measured across the audio band. The third is the field strength of the undesired audio band magnetic field.

2. Air Interface Investigation:

a. Use the worst-case codec test and document a limited set of bands/channel/bandwidths. Observe the effect of
changing the band and bandwidth to ensure that there are no unexpected variations. Using the knowledge of the
observed variations, it is necessary to report only a set band/channel/bandwidth for each orientation for a voice
service/air interface.

b. According to the ANSI C63.19 2019 section 6.3.4, test middle channel of each frequency band for HAC testing
for each orientation to determine worst HAC T-Coil.

c. Opening the Hearing-aid can improve the HAC T-Coil performance of the earpiece.

6.2 GSM Tests Results

Air Interface Investigation:

Air Interface	Modulation	Channel	Sample	Codec	Primary Group Contiguous Point Count	Secondary Group Contiguous Point Count	Frequency Response	Date
GSM1900	Voice	661	#1	AMR NB FR	53	266	PASS	2026/5/8

Remark:

1. Phone Condition: Air Link; Hearing-aid on; Mute on; Backlight off; Max Volume
2. The detail frequency response results please refer to appendix A.

7 T-Coil testing for CMRS IP Voice

7.1 VoLTE Tests Results

1. Codec Investigation:

For a voice service/air interface, investigate the variations of codec configurations (NB bit rate) and document the parameters for that voice service. It is only necessary to document this for one channel / band, the following worst investigation codec would be remarked to be used for the testing for the handset.

2. Air Interface Investigation:

a. Use the worst-case codec test and document a limited set of bands / channel / bandwidths. Observe the effect of changing the band and bandwidth to ensure that there are no unexpected variations. Using the knowledge of the observed variations, it is necessary to report only a set band/channel/bandwidth for each orientation for a voice service/air interface and the following worst configure would be remarked to be used for the testing for the
handset.

b. Select one frequency band to do measurement at the worst Primary Group Contiguous Point Count position was additionally performed with varying the BWs/Modulations/RB size to verify the variation to find out worst configuration, the observed variation is very little to be within 1.5 dB which is much less than the margin from the rating threshold.

LTE FDD Air interface:

Air Interface	BW	Modulation	RB	RB	Channel	Sample	Codec	Primary Group Contiguous Point Count	Secondary Group Contiguous Point Count	Secondary Group Max Longitudinal	Secondary Group Max Transverse	Frequency Response	Date
LTE Band 26(5)	15	QPSK	1	0	26865	#2	EVS WB 5.9Kbps	141	378	20	26	PASS	2026/5/13

Remark:
1. Phone Condition: Air Link; Hearing-aid on; Mute on; Backlight off; Max Volume
2. The detail frequency response results please refer to appendix A

LTE TDD Codec Investigation:

Air Interface	BW	Modulation	RB	RB	Channel	Sample	Codec	Primary Group Contiguous Point Count	Secondary Group Contiguous Point Count	Secondary Group Max Longitudinal	Secondary Group Max Transverse	Frequency Response	Date
LTE Band 41(38)	20	QPSK	1	0	40620	#2	EVS WB 5.9Kbps	106	331	14	26	PASS	2026/5/13

Remark:
1. Phone Condition: Air Link; Hearing-aid on; Mute on; Backlight off; Max Volume
2. The detail frequency response results please refer to appendix A

7.2 VoWiFi Tests Results

1. Codec Investigation:

For a voice service/air interface, investigate the variations of codec configurations (WB, NB bit rate) and document the parameters for that voice service. It is only necessary to document this for one channel/band, the following worst investigation codec would be remarked to be used for the testing for the handset.

2. Air Interface Investigation:

a. Use the worst-case codec test and document a limited set of bands/channel/bandwidths. Observe the effect of
changing the band and bandwidth to ensure that there are no unexpected variations. Using the knowledge of the
observed variations, it is necessary to report only a set band/channel/bandwidth for each orientation for a voice
service/air interface and the following worst configure would be remarked to be used for the testing for the handset.

b. Select WLAN 2.4GHz, WLAN5GHz one frequency band to do measurement at the worst Primary Group Contiguous Point Count position was additionally performed with varying the BWs/Modulations/data rate to verify the variation to find out worst configuration, the observed variation is very little to be within 1 dB which is much less than the margin from the rating threshold.

Air interface:

Air Interface	BW	Modulation	Channel	Sample	Codec	Primary Group Contiguous Point Count	Secondary Group Contiguous Point Count	Secondary Group Max Longitudinal	Secondary Group Max Transverse	Frequency Response	Date
802.11b	20	1M	6	#1	EVS WB 5.9Kbps	153	390	20	26	PASS	2026/5/13

Remark:

1. Phone Condition: Air Link; Hearing-aid on; Mute on; Backlight off; Max Volume
2. The detail frequency response results please refer to appendix A.

7.3 T-Coil testing for OTT VoIP Application

1. The Google Meet only support OPUS audio codec and support 6kbps to 75kbps bitrate.
2. The test setup used for OTT VoIP call is the DUT connect to the CMW500/CMX500 and via the data application unit on CMW500/CMX500 connection to the Internet, the Auxiliary EUT is connected to the WiFi access point, the channel/Modulation/Frequency bands/data rate is configured on the CMW500/CMX500 for the DUT unit. For the Auxiliary VoIP unit which is used to configure the audio codec rate and determine the audio.
3. Codec Investigation: For a voice service/air interface, investigate the variations of codec configurations (WB, NB bit rate) and document the parameters for that voice service. It is only necessary to document this for one channel/band, the following tests results which the worst-case codec would be remarked to be used for the testing for the handset.
4. Use the worst-case codec test and document a limited set of bands/channel/bandwidths. Observe the effect of
changing the band and bandwidth to ensure that there are no unexpected variations. Using the knowledge of the
observed variations, it is necessary to report only a set band/channel/bandwidth for each orientation for a voice service/air interface.

Air interface:

WCDMA:

Air Interface	Modulation	Channel	Sample	Codec	Primary Group Contiguous Point Count	Secondary Group Contiguous Point Count	Secondary Group Max Longitudinal	Secondary Group Max Transverse	Frequency Response	Date
WCDMA IV	HSPA	1412	#1	OPUS 6kbps	170	322	17	26	PASS	2026/5/13

Remark:
1. Phone Condition: Air Link; Mute on; Backlight off; Max Volume
2. The detail frequency response results please refer to appendix A.
3. According to the manufacturer's statement, NR OTT selects the worst mode in LTE for testing.

8 Equipment list

Test Equipment		Manufacturer	Model No.	Inventory No.	Cal. Date	Cal. Due date
☒	Software	SPEAG	DASY8	NA	NCR	NCR
☒	DAE	SPEAG	DAE4	1484	2026-01-12	2027-01-11
☒	Audio Magnetic 1D Field Probe	SPEAG	AM1DV3	3115	2025-10-01	2026-09-30
☒	Test Arch SD HAC	SPEAG	NA	NA	NCR	NCR
☒	Audio Magnetic Measuring Instrument	SPEAG	AMMI	1028	NCR	NCR
☒	Audio Magnetic	SPEAG	AMCC	1143	NCR	NCR
☒	Universal Radio Communication Tester	R&S	CMW500	111637	2025-09-03	2026-09-02
☒	RADIO COMMUNICATION TESTR	R&S	CMX500	101930	2026-01-15	2027-01-14
☒	Humidity and Temperature Indicator	ASONE	THA-02L	2501-2342	2025-06-03	2026-06-02

Note:
1. All the equipment are within the valid period when the tests are performed.
2. NCR: “No-Calibration Required”.

9 Calibration certificate

Please see the Appendix B

10 Photographs

Please see the Appendix C

Appendix A: Detailed Test Results

Appendix B: Calibration certificate

Appendix C: Photographs

--- End of report ---