RF-Emission Test Report

Application No.:	SUCR2502000117WM
Applicant:	TCL Communication Ltd.
Manufacturer:	TCL Communication Ltd.
EUT Description:	Mobile Phone
Model No:	T450A
Trade Mark:	Alcatel
Standards:	ANSI C63.19-2019 CFR 47 FCC Part 20
Date of Receipt:	2025-02-21
Date of Test:	2025-02-21 to 2025-03-05
Date of Issue:	2025-03-07
Test Result :	**PASS ***

* In the configuration tested, the EUT detailed in this report complied with the standards specified above.

This document is issued by the Company subject to its General Conditions of Service printed overleaf, available on request or accessible at http://www.sgs.com/en/Terms-and-Conditions and, for electronic format documents, subject to Terms and Conditions for Electronic Documents at http://www.sgs.com/en/Terms-and-Conditions/Terms-e-Document. Attention is drawn to the limitation of liability, indemnification and jurisdiction issues defined therein. Any holder of this document is advised that information contained hereon reflects the Company's findings at the time of its intervention only and within the limits of Client's instructions, if any. The Company's sole responsibility is to its Client and this document does not exonerate parties to a transaction from exercising all their rights and obligations under the transaction documents. This document cannot be reproduced except in full, without prior written approval of the Company. Any unauthorized alteration, forgery or falsification of the content or appearance of this document is unlawful and offenders may be prosecuted to the fullest extent of the law.
Unless otherwise stated the results shown in this test report refer only to the sample(s) tested and such sample(s) are retained for 30 days only.

Attention: To check the authenticity of testing / inspection report & certificate, please contact us at telephone:(86-755) 8307 1443, or email: CN.Doccheck@sgs.com

Revision Record			
Version	**Description**	**Date**	**Remark**
01	Original	2025-03-07	/

Authorized for issue by:				
		Alger Du		
		/ Project Engineer		
		Leon Liu		
		/ Reviewer		

TEST SUMMARY

Frequency Band	HAC RF Emission Test result*		Results
GSM 850	E-Field dB(V/m)	33.54	PASS
PCS 1900	E-Field dB(V/m)	22.97	PASS
WCDMA band 2	E-Field dB(V/m)	/	PASS
WCDMA band 4	E-Field dB(V/m)	/	PASS
WCDMA band 5	E-Field dB(V/m)	/	PASS
LTE band 2	E-Field dB(V/m)	/	PASS
LTE band 4	E-Field dB(V/m)	/	PASS
LTE band 5	E-Field dB(V/m)	/	PASS
LTE band 7	E-Field dB(V/m)	/	PASS
LTE band 12	E-Field dB(V/m)	/	PASS
LTE band 13	E-Field dB(V/m)	/	PASS
LTE band 17	E-Field dB(V/m)	/	PASS
LTE band 26	E-Field dB(V/m)	/	PASS
LTE band 66	E-Field dB(V/m)	/	PASS
LTE band 38	E-Field dB(V/m)	/	PASS
LTE band 41	E-Field dB(V/m)	/	PASS
WLAN2.4GHz	E-Field dB(V/m)	/	PASS
HAC ResultS: PASS			

Note:

1) This portable wireless equipment has been shown to be hearing-aid compatible under the above rated category, specified in ANSI/IEEE Std.C63.19-2019 and had been tested in accordance with the specified measurement procedures, Hear-Aid Compatibility is based on the assumption that all production units will be designed electrically identical to the device tested in this report. Test results reported herein relate only to the item(s) tested and are for North American Bands only.

2) *- HAC RF Emission Test for low power exemption according to ANSI C63.19-2019 and HAC RF Emission rating is PASS.

CONTENTS

1 General Information 5

1.1 Introduction 5
1.2 Details of Client 6
1.3 Test Location 6
1.4 Test Facility 6
1.5 General Description of EUT 7
1.5.1 *DUT Antenna Locations* *9*
1.5.2 *List of air interfaces/frequency bands* *10*
1.6 Test Specification 11
1.7 ANSI C63.19-2019 limits 11

2 Calibration certificate 12

3 HAC (T Coil) Measurement System 13

3.1 Measurement System Diagram for SPEAG Robotic 13
3.2 E-Field Probe 14
3.3 Test Arch 14
3.4 Phone Holder 14

4 Measurement uncertainty evaluation 15

5 RF Emission Measurements Reference and Plane 16

6 System Verification Procedure 17

6.1 System Check 17
6.2 System Check Result 18

7 Modulation Interference Factor 19

8 HAC Measurement Procedure 21

9 HAC RF Measurement Results 22

9.1 Max Tune-up 22
9.2 Conducted RF Output Power 23
9.3 Low-power Exemption 24
9.4 HAC RF Emission Test Results 26

10 Equipment list 27

1 General Information

1.1 Introduction

The purpose of the Hearing Aid Compatibility is to enable measurements of the near electric fields generated by wireless communication devices in the region controlled for use by a hearing aid in accordance with ANSI-C63.19-2019.

The purpose of this standard is to establish categories for hearing aids and for WD (wireless communications devices) that can indicate to health care practitioners and hearing aid users which hearing aids are compatible with which WD, and to provide tests that can be used to assess the electromagnetic characteristics of hearing aids and WD and assign them to these categories. The various parameters required, in order to demonstrate compatibility and accessibility are measured. The design of the standard is such that when a hearing aid and WD achieve one of the categories specified, as measured by the methodology of this standard, the indicated performance is realized.

In order to provide for the usability of a hearing aid with a WD, several factors must be coordinated:
a) Radio frequency (RF) measurements of the near-field electric fields emitted by a WD to categorize these emissions for correlation with the RF immunity of a hearing aid.

Hence, the following are measurements made for the WD:
RF E-Field emissions

The measurement plane is parallel to, and 1.5cm in front of, the reference plane.

Applications for certification of equipment operation under part 20, that a manufacturer is seeking to certify as hearing aid compatible, as set forth in §20.19 of that part, shall include a statement indication compliance with the test requirements of §20.19 and indicating the appropriate U-rating for the equipment. The manufacturer of the equipment shall be responsible for maintaining the test results.

1.2 Details of Client

Applicant:	TCLCommunicationLtd.
Address:	5/F,Building22E,22ScienceParkEastAvenue,HongKongSciencePark,Shatin,NT,Hong Kong
Manufacturer:	TCLCommunicationLtd.
Address:	5/F,Building22E,22ScienceParkEastAvenue,HongKongSciencePark,Shatin,NT,Hong Kong

1.3 Test Location

Company:	SGS-CSTC Standards Technical Services (Suzhou) Co., Ltd.
Address:	South of No. 6 Plant, No. 1, Runsheng Road, Suzhou Industrial Park, Suzhou Area, China (Jiangsu) Pilot Free Trade Zone
Post code:	215000
Test Engineer:	Alger Du

1.4 Test Facility

The test facility is recognized, certified, or accredited by the following organizations:

- **A2LA (Certificate No. 6336.01)**

SGS-CSTC STANDARDS TECHNICAL SERVICES (SUZHOU) CO., LTD. is accredited by the American Association for Laboratory Accreditation(A2LA). Certificate No. 6336.01.

- **Innovation, Science and Economic Development Canada**

SGS-CSTC STANDARDS TECHNICAL SERVICES (SUZHOU) CO., LTD. has been recognized by ISED as an accredited testing laboratory.
CAB identifier: CN0120.
IC#: 27594.

- **FCC –Designation Number: CN1312**

SGS-CSTC STANDARDS TECHNICAL SERVICES (SUZHOU) CO., LTD. has been recognized as an accredited testing laboratory.
Designation Number: CN1312.
Test Firm Registration Number: 717327

1.5 General Description of EUT

Device Type :	portable device		
Exposure Category:	uncontrolled environment / general population		
Product Name:	Mobile Phone		
Model No.(EUT):	T450A		
Trade Mark:	Alcatel		
Product Phase:	Production Unit		
IMEI:	356790420003606/356790420003614 356790420003648/356790420003655		
Hardware Version:	V00		
Software Version:	450ADA11		
Modulation Mode:	GSM: GMSK, 8PSK; WCDMA: QPSK;16QAM;		
	LTE: QPSK,16QAM,64QAM;		
	WIFI: DSSS, OFDM; BT: GFSK, π/4DQPSK,8DPSK		
Device Class:	B		
GPRS Multi-slots Class:	12	EGPRS Multi-slots Class:	12
HSDPA UE Category:	24	HSUPA UE Category	7
Power Class	4,tested with power level 5(GSM850)		
	1,tested with power level 0(GSM1900)		
	3, tested with power control “all 1”(WCDMA Band)		
	3, tested with power control Max Power(LTE Band)		
Frequency Bands:	Band	Tx (MHz)	Rx (MHz)
	GSM 850	824 - 849 MHz	869 - 894 MHz
	PCS 1900	1850 - 1910 MHz	1930 - 1990 MHz
	WCDMA band 2	1850 -1910 MHz	1930 - 1990 MHz
	WCDMA band 4	1710 -1755MHz	2110 - 2155MHz
	WCDMA band 5	824 - 849MHz	869 - 894MHz
	LTE band 2	1850 - 1910 MHz	1930 - 1990 MHz
	LTE band 4	1710 - 1755 MHz	2110 - 2155 MHz
	LTE band 5	824 - 849 MHz	869 - 894 MHz
	LTE band 7	2500 - 2570 MHz	2620 - 2690 MHz
	LTE band 12	699 - 716 MHz	729 - 746 MHz
	LTE band 13	777 - 787 MHz	746 - 756 MHz
	LTE band 17	704 - 716 MHz	734 - 746 MHz
	LTE band 26	814 - 849 MHz	859 - 894 MHz
	LTE band 38	2570 - 2620 MHz	2570 - 2620 MHz
	LTE band 41	2496 - 2690 MHz	2496 - 2690 MHz
	LTE band 66	1710 - 1780 MHz	2110 - 2200 MHz
	WLAN2.4GHz	2412-2462 MHz	2412-2462 MHz

	Bluetooth	2400~2483.5	2400~2483.5
Battery Information:	Model:	TLp049LB	
	Normal Voltage:	3.87V	
	Typical Capacity:	5010mAh	
	Brand Name:	TCL	

Note:

*Since the above data and/or information is provided by the client relevant results or conclusions of this report are only made for these data and/or information, SGS is not responsible for the authenticity, integrity and results of the data and information and/or the validity of the conclusion.

Remark:

As above information is provided and confirmed by the applicant. SGS is not liable to the accuracy, suitability, reliability or/and integrity of the information.

1.5.1 DUT Antenna Locations

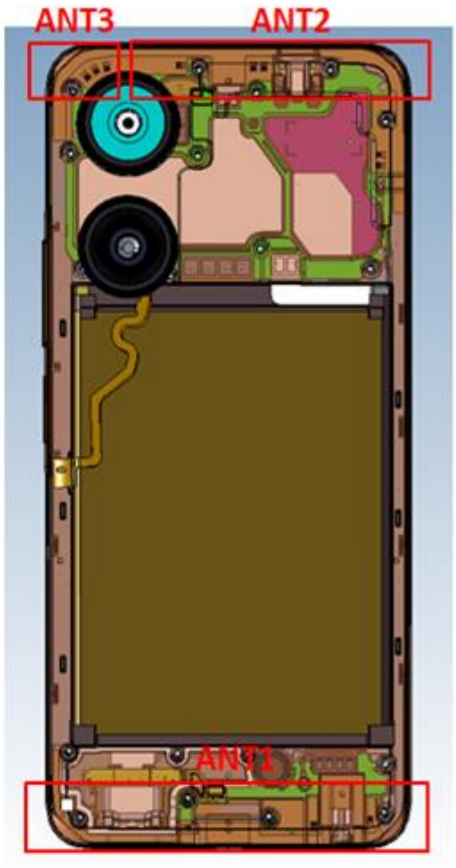

ANT1:
TRX:DCS1800/PCS1900/WB1/WB2/WB4/LTEB1/B2/B3/B4/B5/B7/B66/B38/B40/B41;
DRX:GSM850/GSM900/WB5/WB8/LTEB5/B8/B12/B13/B17/B20/B26/B28

ANT2:
TRX:GSM850/GSM900/WB5/WB8/LTEB5/B8/B12/B13/B17/B20/B26/B28
DRX:DCS1800/PCS1900/WB1/WB2/WB4/LTEB1/B2/B3/B4/B5/B7/B66/B38/B40/B41

ANT3:
BT/GPS/2.4G WIFI

Note:
1) The diversity Antenna does not support transmitter function.

1.5.2 List of air interfaces/frequency bands

Air Interface	Band (MHz)	Type	ANSI C63.19 Tested	Simultaneous Transmitter	Name of Voice Service	Power Reduction
GSM	850	VO	Yes	BT, Wi-Fi	CMRS Voice	NO
	1900					
	EDGE	VD	Yes		Google Meet*	
WCDMA	Band II	VO	Yes	BT, Wi-Fi	CMRS Voice	NO
	Band IV					
	Band V					
	HSPA	VD	Yes		Google Meet*	
LTE FDD	LTE band 2	VD	Yes	BT, Wi-Fi	VoLTE Google Meet*	NO
	LTE band 4					
	LTE band 5					
	LTE band 7					
	LTE band 12					
	LTE band 13					
	LTE band 17					
	LTE band 26					
	LTE band 66					
LTE TDD	LTE band 38	VD	Yes	BT, Wi-Fi	VoLTE Google Meet*	NO
	LTE band 41					
Wi-Fi	2450	VD	Yes	WWAN	Google Meet*	NO
BT	2450	DT	No(1)	WWAN	NA	NO

VO: Legacy Cellular Voice Service

DT: Digital Transport (no voice)

VD: IP Voice Service over Digital Transport

*ANSI C63.19-2019 use table 6.1 to establish the Normal speech input level and NOTE 2 of table 6.1 identifies the group of VoIP voice services that use −16 dBm0 as the normal speech input level.

Remark:

1.The WLAN6GHz U-NII 6/7/8 were above 6GHz and were not evaluated due to outside of the current scope of ANSI C63.19 and FCC HAC regulations.

2. The WLAN6GHz UNI-5 was evaluated for operations which are entirely below 6GHz, above 6 GHz were not evaluated due outside of the current scope of ANSI C63.19 and FCC HAC regulations.

3. Because features of Google Meet allow the option of voice-only communications, Meet has been tested for HAC/T-Coil compatibility to ensure the best user experience.

4. The Google Meet and google Fi the audio path, parameter and audio codec are all the same, therefore, the Google Meet is evaluation for this device to show compliance.

1.6 Test Specification

Identity	Document Title
CFR 47 FCC Part 20	§20.19 Hearing aid-compatible mobile handsets.
ANSI C63.19-2019	American National Standard for Methods of Measurement of Compatibility between Wireless Communication Devices
KDB 285076 D01	HAC Guidance v06r04

1.7 ANSI C63.19-2019 limits

Emission Categories	E-field emissions dB(V/m)		
	< 960 MHz	960MHz-2000MHz	>2000 MHz
E field level	<= 39dB (V/m)	<= 36dB (V/m)	<= 35dB (V/m)

Table 1： Telephone near-field categories in linear units

2 Calibration certificate

Temperature	Min. = 18°C, Max. = 25 °C
Relative humidity	Min. = 30%, Max. = 70%

Table 2： The Ambient Conditions

3 HAC (T Coil) Measurement System

3.1 Measurement System Diagram for SPEAG Robotic

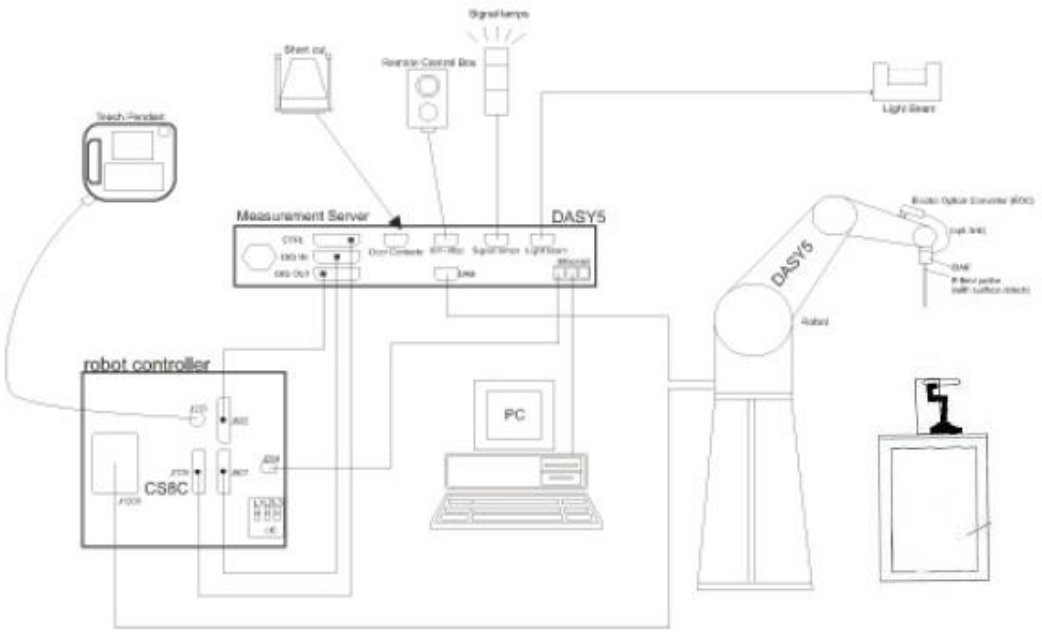

Fig. 1. The SPEAG Robotic Diagram

The DASY8 system for performing compliance tests consists of the following items:

- A standard high precision 6-axis robot (Stabile RX family) with controller, teach pendant and software. An arm extension is for accommodating the data acquisition electronics (DAE).
- An Audio Magnetic probe.
- A data acquisition electronics (DAE) which performs the signal amplification, signal multiplexing, AD-conversion, offset measurements, mechanical surface detection, collision detection, etc. The unit is battery powered with standard or rechargeable batteries. The signal is optically transmitted to the EOC.
- The Electro-optical converter (EOC) performs the conversion between optical and electrical of the signals for the digital communication to the DAE and for the analog signal from the optical surface detection. The EOC is connected to the measurement server.
- The function of the measurement server is to perform the time critical tasks such as signal filtering, control of the robot operation and fast movement interrupts.
- A probe alignment unit which improves the (absolute) accuracy of the probe positioning.
- A computer operating Windows 7.
- DASY8 software.
- Remote control with teach pendant and additional circuitry for robot safety such as warning lamps, etc.
- The Test Arch SAM phantom
- The device holder for handheld mobile phones.
- Validation dipole kits allowing to validate the proper functioning of the system.

3.2 E-Field Probe

Construction	One dipole parallel, two dipoles normal to probe axis Built-in shielding against static charges PEEK enclosure material	 EF3DV3 E-Field Probe
Calibration	In air from 100 MHz to 6.0 GHz (absolute accuracy ±6.0%, k=2)	
Frequency	(extended to 20 MHz for MRI), Linearity: ± 0.2 dB (100 MHz to 6 GHz)	
Directivity	± 0.2 dB in air (rotation around probe axis) ± 0.4 dB in air (rotation normal to probe axis)	
Dynamic Range	2 V/m to > 1000 V/m; Linearity: ± 0.2 dB	
Dimensions	Tip diameter: 8 mm Distance from probe tip to dipole centers: 2.5 mm	

3.3 Test Arch

Description	Enables easy and well defined positioning of the phone and validation dipoles as well as simple teaching of the robot.	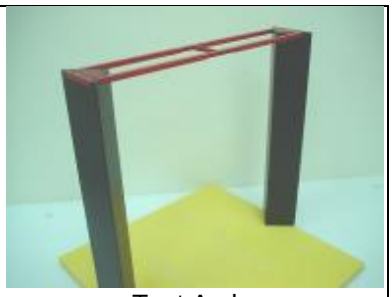 Test Arch
Dimensions	length: 370 mm width: 370 mm height: 370 mm	

3.4 Phone Holder

Description	Supports accurate and reliable positioning of any phone Effect on near field <+/- 0.5 dB	 Phone Holder

4 Measurement uncertainty evaluation

Uncertainty Component	Uncertainty Value (%)	Probability Distribution	Divisor	ci €	Standard Uncertainty € (%)
Measurement system					
Probe calibration	±5.1	N	1	1	±5.1
Axial isotropy	±4.7	R	$\sqrt{3}$	1	±2.7
Sensor position	±16.5	R	$\sqrt{3}$	1	±9.5
Boundary effect	±2.4	R	$\sqrt{3}$	1	±1.4
Phantom Boundary Effect	±7.2	R	$\sqrt{3}$	1	±4.1
Linearity	±4.7	R	$\sqrt{3}$	1	±2.7
Scaling with PMR calibration	±10.0	R	$\sqrt{3}$	1	±5.8
System Detection limit	±1.0	R	$\sqrt{3}$	1	±0.6
Readout Electronics	±0.3	N	$\sqrt{3}$	1	±0.3
Response time	±0.8	R	$\sqrt{3}$	1	±0.5
Integration time	±2.6	R	$\sqrt{3}$	1	±1.5
RF ambient conditions	±3.0	R	$\sqrt{3}$	1	±1.7
RF reflection	±12.0	R	$\sqrt{3}$	1	±6.9
Probe positioner	±1.2	R	$\sqrt{3}$	1	±0.7
Probe positioning	±4.7	R	$\sqrt{3}$	1	±2.7
Extrapolation and interpolation	±1.0	R	$\sqrt{3}$	1	±0.6
Related to test samples					
Device Positioning Vertical	±4.7	R	$\sqrt{3}$	1	±2.7
Device Positioning Lateral	±1.0	R	$\sqrt{3}$	1	±0.6
Device Holder and Phantom	±2.4	R	$\sqrt{3}$	1	±1.4
Power drift	±5.0	R	$\sqrt{3}$	1	±2.9
Phantom and Setup Related					
Phantom Thickness	±2.4	R	$\sqrt{3}$	1	±1.4
Combined Std. Uncertainty	$u_c^{'} = \sqrt{\sum_{i=1}^{21} c_i^2 u_i^2}$				**±16.3**
Expanded Std. Uncertainty on Power (K=2)					**±32.6**
Expanded Std. Uncertainty on Field (K=2)					**±16.3**

Table 3： Measurement uncertainties for RF

5 RF Emission Measurements Reference and Plane

Fig.3 illustrate the references and reference plane that shall be used in a typical EUT emissions measurement. The principle of this section is applied to EUT with similar geometry. Please refer to Appendix C for the setup photographs.

- The area is 5 cm by 5 cm.
- The area is centered on the audio frequency output transducer of the EUT.
- The area is in a reference plane, which is defined as the planar area that contains the highest point in the area of the phone that normally rests against the user's ear. It is parallel to the centerline of the receiver area of the phone and is defined by the points of the receiver-end of the EUT handset, which, in normal handset use, rest against the ear.
- The measurement plane is parallel to, and 10 mm in front of, the reference plane.

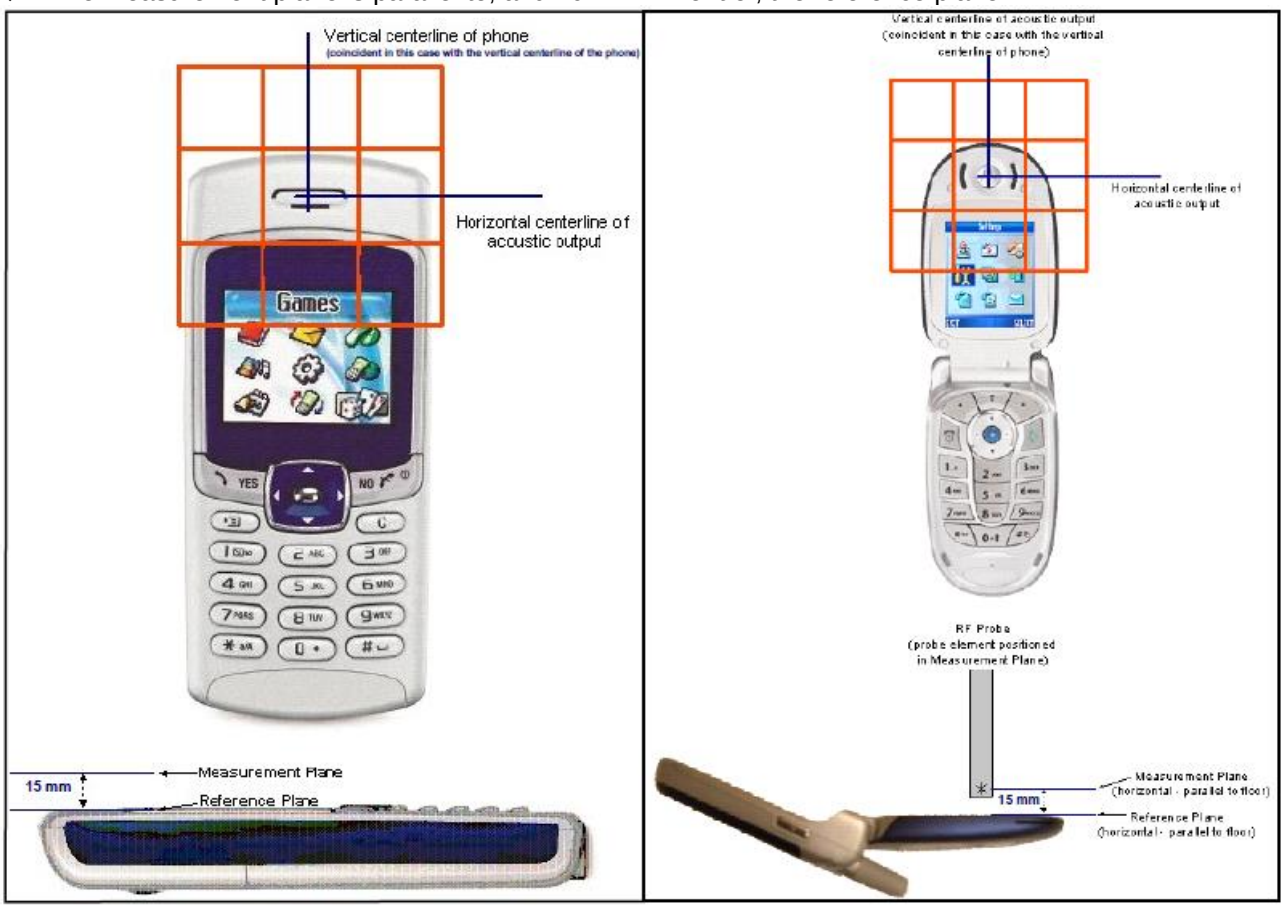

Fig.3 WD reference and plane for RF emission measurements

6 System Verification Procedure

6.1 System Check

Place a dipole antenna meeting the requirements given in ANSI C63.19-2019 in the position normally occupied by the WD. The dipole antenna serves as a known source for an electrical and magnetic output. Position the E-field probe so that the following occurs:

• The probes and their cables are parallel to the coaxial feed of the dipole antenna

• The probe cables and the coaxial feed of the dipole antenna approach the measurement area from opposite directions

• The center point of the probe element(s) are 15 mm from the closest surface of the dipole elements.

Scan the length of the dipole with the E-field probe and record the two maximum values found near the dipole ends. Average the two readings and compare the reading to the expected value in the calibration certificate or the expected value in this standard.

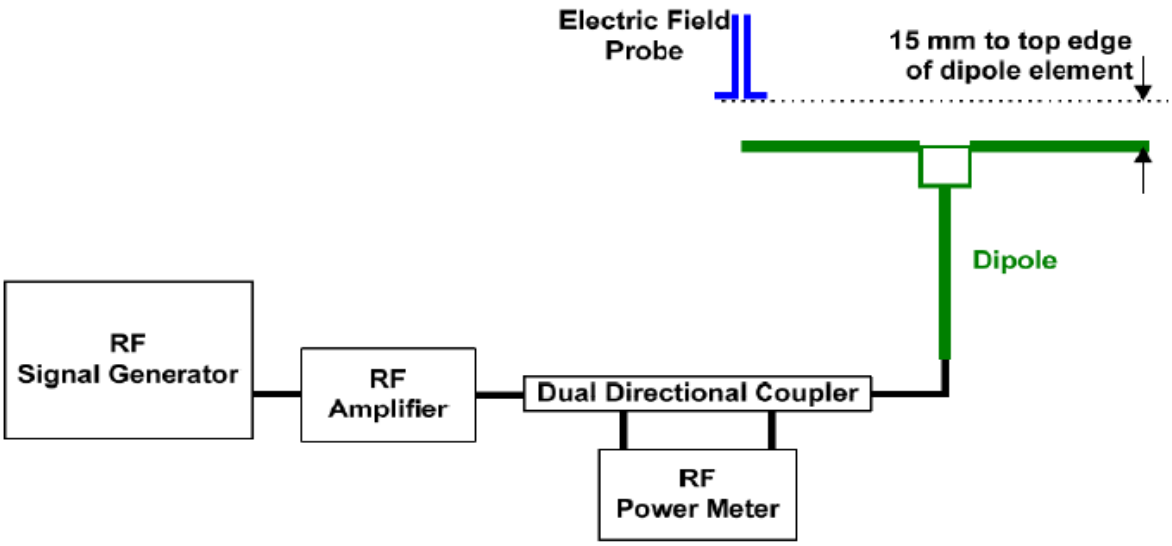

Fig.4 System verification

6.2 System Check Result

Mode	Frequency (MHz)	Input Power (mW)	E-Field (V/m)	Target Value (V/m)	Deviation (%)	Limit (%)	Test Date
CW	835	100	113.8	112.2	1.43	±12.8	2025/3/5
CW	1880	100	87.5	86.6	1.04	±12.8	2025/3/5

Note:
* Please refer to the appendix A for detailed measurement data and plot.
** Target value is provided by SPEAD in the calibration certificate of specific dipoles.
*** Deviation (%) = 100 * (Measured value minus Target value) divided by Target value.
**** ANSI C63.19 requires values within ± 18% are acceptable.

7 Modulation Interference Factor

For any specific fixed and repeatable modulated signal, a modulation interference factor (MIF, expressed in dB)
may be developed that relates its interference potential to its steady-state rms signal level or average power level.
This factor is a function only of the audio-frequency amplitude modulation characteristics of the signal and is the
same for field-strength and conducted power measurements. It is important to emphasize that the MIF is valid only for a specific repeatable audio-frequency amplitude modulation characteristic. Any change in modulation
characteristic requires determination and application of a new MIF
The Modulation Interference factor (MIF, in dB) is added to the measured average E-field (in dBV/m) and converts it to the RF Audio Interference level (in dBV/m). This level considers the audible amplitude modulation components in the RF E-field. CW fields without amplitude modulation are assumed to not interfere with the hearing aid electronics.
Modulations without time slots and low fluctuations at low frequencies have low MIF values, TDMA modulations
with narrow transmission and repetition rates of few 100 Hz have high MIF values and give similar classifications as ANSI C63.19-2019.
DASY8 is therefore using the indirect measurement method according to ANSI C63.19-2019 which is the primary method. These near field probes read the averaged E-field measurement. Especially for the new high peak-to-average (PAR) signal types, the probes shall be linearized by PMR calibration in order to not overestimate the field reading. Probe Modulation Response (PMR) calibration linearizes the probe response over its dynamic range for specific modulations which are characterized by their UID and result in an uncertainty specified in the probe calibration certificate. The MIF is characteristic for a given waveform envelope and can be used as a constant conversion factor if the probe has been PMR calibrated.
The evaluation method for the MIF is defined in ANSI C63.19-2019 section D.7. An RMS demodulated RF signal is fed to a spectral filter (similar to an A weighting filter) and forwarded to a temporal filter acting as a quasi-peak
detector. The averaged output of these filtering is scaled to a 1 kHz 80% AM signal as reference. MIF measurement requires additional instrumentation and is not well suited for evaluation by the end user with reasonable uncertainty.
It may alliteratively be determined through analysis and simulation, because it is constant and characteristic for a
communication signal. DASY8 uses well-defined signals for PMR calibration. The MIF of these signals has been
determined by simulation and it is automatically applied.

The MIF measurement uncertainty is estimated as follows, declared by HAC equipment provider SPEAG, for modulation frequencies from slotted waveforms with fundamental frequency and at least 2 harmonics within 10 kHz:
1. 0.2 dB for MIF: -7 to +5 dB
2. 0.5 dB for MIF: -13 to +11 dB
3. 1 dB for MIF: > -20 dB
MIF values applied in this test report were provided by the HAC equipment provider of SPEAG, and the worst
values for all air interface are listed below to be determine the Low-power Exemption.

SPEAG UID	UID version	Communication system	MIF(dB)
10021	DAC	GSM-FDD (TDMA,GMSK)	3.63
10025	DAC	EDGE-FDD (TDMA, 8PSK, TN 0)	3.75
10460	AAA	UMTS-FDD (WCDMA, AMR)	-25.43
10225	AAA	UMTS-FDD (HSPA+)	-20.39
10169	CAE	LTE-FDD (SC-FDMA, 1 RB, 20 MHz, QPSK)	-15.63
10170	CAE	LTE-FDD (SC-FDMA,1RB, 20 MHz,16-QAM)	-9.76
10172	CAG	LTE-TDD (SC-FDMA, 1 RB, 20 MHz, QPSK)	-1.62
10173	CAG	5G NR (CP-OFDM, 1 RB, 15 MHz, QPSK, 15 kHz)	-12.08
10173	CAG	LTE-TDD (SC-FDMA,1RB, 20 MHz,16-QAM)	-1.44
10061	CAB	IEEE 802.11b WiFi 2.4 GHz (DSSS, 11 Mbps)	-2.02
10077	CAB	IEEE 802.11g WiFi 2.4 GHz (DSSS-OFDM, 54 Mbps)	0.12
10427	AAB	IEEE 802.11n (HT Green eld, 150 Mbps, 64-QAM)	-13.44
10069	CAC	IEEE 802.11a/h WiFi 5 GHz (OFDM, 54 Mbps)	-3.15
10616	AAB	IEEE 802.11ac WiFi (40MHz, MCS0, 90pc duty cycle)	-5.57
10671	AAB	IEEE 802.11ax WiFi (20MHz, MCS0, 90pc duty cycle)	-5.58

8 HAC Measurement Procedure

The evaluation was performed with the following procedure:
a) Confirm the proper operation of the field probe, probe measurement system, and other instrumentation and the positioning system.
b) Position the WD in its intended test position.
c) Set the WD to transmit a fixed and repeatable combination of signal power and modulation characteristic that is representative of the worst case (highest interference potential) encountered in normal use. Transiently occurring start-up, changeover, or termination conditions, or other operations likely to occur less than 1% of the time during normal operation, may be excluded from consideration.
d) The center subgrid shall be centered on the T-Coil mode perpendicular measurement point or the acoustic output, as appropriate. Locate the field probe at the initial test position in the 50 mm by 50 mm grid, which is contained in the measurement plane, refer to illustrated in Figure 3. If the field alignment method is used, align the probe for maximum field reception.
e) Record the reading at the output of the measurement system.
f) Scan the entire 50 mm by 50 mm region in equally spaced increments and record the reading at each measurement point. The distance between measurement points shall be sufficient to assure the identification of the maximum reading.
g) Identify the five contiguous subgrids around the center subgrid whose maximum reading is the lowest of all available choices. This eliminates the three subgrids with the maximum readings. Thus, the six areas to be used to determine the WD's highest emissions are identified.
h) Identify the maximum reading within the nonexcluded subgrids identified in step g).
i) Convert the maximum reading identified in step h) to RF audio interference level, in, V/m, by taking the square root of the reading and then dividing it by the measurement system transfer function, established in 5.5.1.1. Convert the result to dB(V/m) by taking the base-10 logarithmand multiplying it by 20.
Indirect measurement method
Replacing step i) of 5.5.1.2, the RF audio interference level in dB(V/m) is obtained by adding the MIF (in dB) to the maximum steady-state rms field-strength reading, in dB(V/m), from step h). Use this result to determine the category rating.
j) Compare this RF audio interference level with the categories in Clause 8 and record the resulting WD category rating.
k) For the T-Coil mode M-rating assessment, determine whether the chosen perpendicular measurement point is contained in an included subgrid of the first scan. If so, then a second scan is not necessary. The first scan and resultant category rating may be used for the T-Coil mode M rating.
Otherwise, repeat step a) through step i), with the grid shifted so that it is centered on the perpendicular measurement point. Record the WD category rating.

9 HAC RF Measurement Results

9.1 Max Tune-up

Ant 1				
Frequency Band		Channel	Frequency(MHz)	Tune up Power (dBm)
GSM	GSM1900	661	1880	30.00
	EDGE1900	661	1880	23.50
WCDMA	Band II	9400	1880	23.00
	HSPA	9400	1880	22.00
	Band IV	1412	1732.4	23.00
	HSPA	1412	1732.4	21.50
LTE FDD	Band 2	18900	1880	24.00
	Band 4	20175	1732.5	23.50
	Band 7	21100	2535	24.00
	Band 66	132322	1745	23.50
LTE TDD	Band 38	38000	2595	24.00
	Band 41	40620	2593	24.00

Ant 2				
Frequency Band		Channel	Frequency(MHz)	Tune up Power (dBm)
GSM	GSM850	190	836.6	33.50
	EDGE850	190	836.6	25.00
WCDMA	Band V	4183	836.6	24.00
	HSPA	4183	836.6	23.50
LTE FDD	Band 5	20525	836.5	25.00
	Band 12	23095	707.5	25.00
	Band 13	23230	782	25.00
	Band 17	23790	710	25.00
	Band 26	26865	831.5	25.00

Ant 3				
Frequency Band		Channel	Frequency(MHz)	Tune up Power (dBm)
2.4GHz WLAN	802.11b	6	2437	17.50
	802.11g	6	2437	15.50
	802.11n-HT20	6	2437	15.50

9.2 Conducted RF Output Power

GSM 1900 Ant 1										
Burst Output Power(dBm)						Division Factors	Frame-Average Output Power(dBm)			
Channel		512	661	810	Tune up		512	661	810	Tune up
GSM(GMSK)	GSM	28.35	28.49	28.56	30.00	-9.19	19.16	19.30	**19.37**	20.81
EGPRS (8PSK)	2 TX Slots	22.38	22.54	22.39	23.50	-6.18	16.20	16.36	16.21	17.32

GSM 850 Ant 2										
Burst Output Power(dBm)						Division Factors	Frame-Average Output Power(dBm)			
Channel		128	190	251	Tune up		128	190	251	Tune up
GSM(GMSK)	GSM	31.83	31.85	31.95	33.50	-9.19	22.64	22.66	22.76	24.31
EGPRS (8PSK)	2 TX Slots	23.79	23.83	23.72	25.00	-6.18	17.61	17.65	17.54	18.82

9.3 Low-power Exemption

The primary method for establishing the RF interference potential of a WD is based on conducted power to the antenna. The waveform-specific modulation interference factor (MIF) is measured separately and added to the measured average conducted power, in dBm.

The WD's conducted power must be at or below either the stated RFAIPL (Table 4.1) or the stated peak power level (Table 4.2), or the average near-field emissions over the measurement area must be at or below the stated RFAIL (Table 4.3), or the stated peak field strength (Table 4.4).

The WD may demonstrate compliance by meeting any of these four requirements, but it must do so in each of its operating bands at its established worst-case normal speech-mode operating condition.

Table 4.1—Wireless device RF audio interference power level

Frequency range (MHz)	RF_{AIPL} (dBm)
<960	29
960–2000	26
>2000	25

Table 4.2—Wireless device RF peak power level

Frequency range (MHz)	$RF_{Peak\ Power}$ (dBm)
< 960	35
960–2000	32
>2000	31

Table 4.3—Wireless device RF audio interference level

Frequency range (MHz)	RF_{AIL} [dB(V/m)]
≤960	39
960–2000	36
>2000	35

Table 4.4—Wireless device RF peak near-field level

Frequency range (MHz)	RF_{peak} [dB(V/m)]
≤960	45
960–2000	42
>2000	41

An analysis shall be performed following the guidance of the RF air interface technology being evaluated. Factors that will affect the RF interference potential shall be evaluated, and the worst-case operating mode shall be identified and used in the evaluation. Any factor that can affect the RF interference potential shall be evaluated.

Examples of such factors are those that will change the RF signal envelope, such as discontinuous transmission due to data load, power management, or configuration options of the RF air interface technology.

RF audio interference power level is compared to the limits in Sec.5 Table 4.1.

Ant 1				
Air Interface	**Max Average Antenna Input Power (dBm)**	**Worst Case MIF (dB)**	**Power + MIF(dB)**	**C63.19 test required**
GSM1900	30.00	3.63	33.63	YES
EDGE1900	23.50	3.75	27.25	YES
WCDMA	23.00	-25.43	-2.43	NO
WCDMA - HSPA	22.00	-20.39	1.61	NO
LTE - FDD	24.00	-9.76	14.24	NO
LTE - TDD	24.00	-1.44	22.56	NO

Note: Select tests with highest Power+MIF values for the same frequency band.

Ant 2				
Air Interface	**Max Average Antenna Input Power (dBm)**	**Worst Case MIF (dB)**	**Power + MIF(dB)**	**C63.19 test required**
GSM850	33.50	3.63	37.13	YES
EDGE850	25.00	3.75	28.75	YES
WCDMA	24.00	-25.43	-1.43	NO
WCDMA - HSPA	23.50	-20.39	3.11	NO
LTE - FDD	25.00	-9.76	15.24	NO

Note: Select tests with highest Power+MIF values for the same frequency band.

Ant 3				
Air Interface	**Max Average Antenna Input Power (dBm)**	**Worst Case MIF (dB)**	**Power + MIF(dB)**	**C63.19 test required**
802.11b	17.50	-2.02	15.48	NO
802.11g	15.50	0.12	15.62	NO
802.11n	15.50	-13.44	2.06	NO

Note: Select tests with highest Power+MIF values for the same frequency band.

9.4 HAC RF Emission Test Results

Air Interface	BW	Modulation / Mode	RB Size	RB offset	Channel	Frequency(MHz)	Ant	Average Antenna Input Power (dBm)	MIF	E-Field (dBV/m)	RF Pass/Fail	Date
GSM850	-	GSM Voice	-	-	128	824.2	Ant 2	31.83	3.63	33.27	PASS	2025/3/5
GSM850	-	GSM Voice	-	-	190	836.6	Ant 2	31.85	3.63	33.54	PASS	2025/3/5
GSM850	-	GSM Voice	-	-	251	848.8	Ant 2	31.95	3.63	33.43	PASS	2025/3/5
GSM850	-	EDGE	-	-	128	824.2	Ant 2	23.79	3.75	13.96	PASS	2025/3/5
GSM850	-	EDGE	-	-	190	836.6	Ant 2	23.83	3.75	14.02	PASS	2025/3/5
GSM850	-	EDGE	-	-	251	848.8	Ant 2	23.72	3.75	13.88	PASS	2025/3/5
GSM1900	-	GSM Voice	-	-	512	1850.2	Ant 1	28.35	3.63	22.84	PASS	2025/3/5
GSM1900	-	GSM Voice	-	-	661	1880	Ant 1	28.49	3.63	22.97	PASS	2025/3/5
GSM1900	-	GSM Voice	-	-	810	1909.8	Ant 1	28.56	3.63	22.72	PASS	2025/3/5
GSM1900	-	EDGE	-	-	512	1850.2	Ant 1	22.38	3.75	11.01	PASS	2025/3/5
GSM1900	-	EDGE	-	-	661	1880	Ant 1	22.54	3.75	11.15	PASS	2025/3/5
GSM1900	-	EDGE	-	-	810	1909.8	Ant 1	22.39	3.75	11.09	PASS	2025/3/5

Remark:

1. The detail RF Emission results please refer to appendix B.

10 Equipment list

Test Equipment		Manufacturer	Model No.	Inventory No.	Cal. Date	Cal. Due date
☒	Software	SPEAG	D8 HAC V1.2	NA	NCR	NCR
☒	DAE	SPEAG	DAE4	1374	2024-10-30	2025-10-29
☒	E-Field Probe	SPEAG	EF3DV3	4051	2024-08-14	2025-08-13
☒	Validation Kits	SPEAG	CD835V3	1052	2022-05-25	2025-05-24
☒	Validation Kits	SPEAG	CD1880V3	1044	2022-05-25	2025-05-24
☒	Test Arch SD HAC	SPEAG	NA	NA	NCR	NCR
☒	Universal Radio Communication Tester	R&S	CMW500	111637	2024-09-10	2025-09-09
☒	Signal Generator	R&S	SMB100A	182393	2025-02-05	2026-02-04
☒	Preamplifier	Qiji	YX28980933	202104001	NCR	NCR
☒	Power Sensor	Keysight	U2002H	121251	2024-09-12	2025-09-11
☒	Power Sensor	Agilent	U2002H	MY48200110	2024-11-21	2025-11-20
☒	Coaxial low pass filter	Mini-Circuits	VLF-2500(+)	NA	NCR	NCR
☒	Coaxial low pass filter	Microlab Fxr	LA-F13	NA	NCR	NCR
☒	DC POWER SUPPLY	SAKO	SK1730SL5A	NA	NCR	NCR
☒	Humidity and Temperature Indicator	MingGao	MingGao	NA	2024-06-14	2025-06-13

Note:
1. All the equipments are within the valid period when the tests are performed.

---End of Report---