HAC RF TESTREPORT

No. I17Z62005-SEM02

For

TCL Communication Ltd.

A70A XL TMO

Model Name: 6062W

With

Hardware Version: 06

Software Version: v1A65

FCC ID: 2ACCJBT09

Results Summary: M Category = M4

Issued Date: 2018-4-28

TESTING
NVLAP LAB CODE 600118-0

Note:

The test results in this test report relate only to the devices specified in this report. This report shall not be reproduced except in full without the written approval of CTTL.

The report must not be used by the client to claim product certification, approval, or endorsement by NVLAP, NIST, or any agency of the U.S.Government.

Test Laboratory:

CTTL, Telecommunication Technology Labs, CAICT

No. 51, Xueyuan Road, Haidian District, Beijing, P. R. China 100191.

Tel:+86(0)10-62304633-2512, Fax:+86(0)10-62304633-2504

©Copyright. All rights reserved by CTTL.

REPORT HISTORY

Report Number	Revision	Issue Date	Description
I17Z62005-SEM02	Rev.0	2018-4-28	Initial creation of test report

©Copyright. All rights reserved by CTTL.

TABLE OF CONTENT

1 TEST LABORATORY 5

1.1 TESTING LOCATION 5
1.2 TESTING ENVIRONMENT 5
1.3 PROJECT DATA 5
1.4 SIGNATURE 5

2 CLIENT INFORMATION 6

2.1 APPLICANT INFORMATION 6
2.2 MANUFACTURER INFORMATION 6

3 EQUIPMENT UNDER TEST (EUT) AND ANCILLARY EQUIPMENT (AE) 7

3.1 ABOUT EUT 7
3.2 INTERNAL IDENTIFICATION OF EUT USED DURING THE TEST 7
3.3 INTERNAL IDENTIFICATION OF AE USED DURING THE TEST 7
3.4 AIR INTERFACES / BANDS INDICATING OPERATING MODES 7

4 CONDUCTED OUTPUT POWER MEASUREMENT 7

4.1 SUMMARY 8
4.2 CONDUCTED POWER 8

5 REFERENCE DOCUMENTS 9

5.1 REFERENCE DOCUMENTS FOR TESTING 9

6 OPERATIONAL CONDITIONS DURING TEST 10

6.1 HAC MEASUREMENT SET-UP 10
6.2 PROBE SPECIFICATION 11
6.3TEST ARCH PHANTOM &PHONE POSITIONER 12
6.4ROBOTIC SYSTEM SPECIFICATIONS 12

7 EUT ARRANGEMENT 13

7.1 WD RF EMISSION MEASUREMENTS REFERENCE AND PLANE 13

8 SYSTEM VALIDATION 14

8.1 VALIDATION PROCEDURE 14
8.2 VALIDATION RESULT 14

9 EVALUATION OF MIF 15

9.1 INTRODUCTION 15
9.2 MIF MEASUREMENT WITH THE AIA 16
9.3 TEST EQUIPMENT FOR THE MIF MEASUREMENT 16
9.4 TEST SIGNAL VALIDATION 16
9.5 DUTMIF RESULTS 17

10 EVALUATION FOR LOW-POWER EXEMPTION 19

10.1 PRODUCT TESTING THRESHOLD 19
10.2 CONDUCTED POWER 19

©Copyright. All rights reserved by CTTL.

10.3 CONCLUSION 19

11 RF TEST PROCEDUERES 20

12 MEASUREMENT RESULTS (E-FIELD) 21

13 ANSIC 63.19-2011 LIMITS 21

14 MEASUREMENT UNCERTAINTY 22

15 MAIN TEST INSTRUMENTS 23

16 CONCLUSION 23

ANNEX A TEST LAYOUT 24

ANNEX B TEST PLOTS 25

ANNEX C SYSTEM VALIDATION RESULT 31

ANNEX D PROBE CALIBRATION CERTIFICATE 31

ANNEX E DIPOLE CALIBRATION CERTIFICATE 43

©Copyright. All rights reserved by CTTL.

1 Test Laboratory

1.1 Testing Location

CompanyName:	CTTL(Shouxiang)
Address:	No. 51 Shouxiang Science Building, Xueyuan Road, Haidian District, Beijing, P. R. China100191

1.2 Testing Environment

Temperature:	18°C~25°C,
Relative humidity:	30%~ 70%
Ground system resistance:	< 0.5 Ω
Ambient noise is checked and found very low and in compliance with requirement of standards. Reflection of surrounding objects is minimized and in compliance with requirement of standards.	

1.3 Project Data

Project Leader:	Qi Dianyuan
Test Engineer:	Lin Hao
Testing Start Date:	April 9, 2018
Testing End Date:	April 9, 2018

1.4 Signature

Lin Xiaojun

(Prepared this test report)

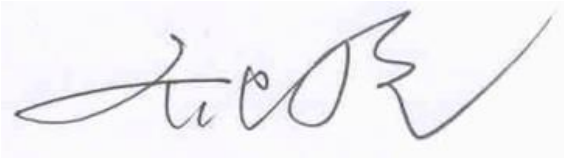

Qi Dianyuan

(Reviewed this test report)

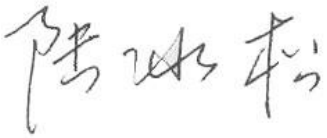

Lu Bingsong

Deputy Director of the laboratory

(Approved this test report)

©Copyright. All rights reserved by CTTL.

2 Client Information

2.1 Applicant Information

Company Name	TCL Communication Ltd.
Company Address	7/F, Block F4, TCL Communication Technology Building, TCL International E City, Zhong Shan Yuan Road, Nanshan District, Shenzhen, Guangdong, P.R. China 518052
Post Code	518052
Contact Person	Zhizhou Gong
Tel	0086-755-36611722
Mobile	0086-18217635320
Fax	0086-755-36612000 ext: 81722
E-Mail	zhizhou.gong@tcl.com
Company URL	www.alcatel-mobile.com

2.2 Manufacturer Information

Company Name	TCL Communication Ltd.
Company Address	7/F, Block F4, TCL Communication Technology Building, TCL International E City, Zhong Shan Yuan Road, Nanshan District, Shenzhen, Guangdong, P.R. China 518052
Post Code	518052
Contact Person	Zhizhou Gong
Tel	0086-755-36611722
Mobile	0086-18217635320
Fax	0086-755-36612000 ext: 81722
E-Mail	zhizhou.gong@tcl.com
Company URL	www.alcatel-mobile.com

©Copyright. All rights reserved by CTTL.

3 Equipment Under Test (EUT) and Ancillary Equipment (AE)

3.1 About EUT

Description:	A70A XL TMO
Model name:	6062W
Operating mode(s):	GSM 850/900/1800/1900 WCDMA850/1700/1900/2100 LTE B1/2/3/4/5/7/12/13/20/66/71, BT, WLAN

3.2 Internal Identification of EUT used during the test

EUT ID*	IMEI	HW Version	SW Version
EUT1	015126000202859	06	v1A65
EUT2	015126000202842	06	v1A65

*EUT ID: is used to identify the test sample in the lab internally.

3.3 Internal Identification of AE used during the test

AE ID*	Description	Model	SN	Manufacturer
AE1	Battery	TLp038C1	CAC3860010C1	BYD

*AE ID: is used to identify the test sample in the lab internally.

3.4 Air Interfaces / Bands Indicating Operating Modes

Air-interface	Band(MHz)	Type	C63.19/tested	Simultaneous Transmissions	OTT
GSM	850	VO	Yes	BT, WLAN	NA
	1900				
GPRS/EDGE	850	DT	NA		
	1900				
WCDMA (UMTS)	850	VO	Yes	BT, WLAN	NA
	1700				
	1900				
	HSPA	DT	NA		
LTE	Band 2/4/5/7/12/13/66/71	V/D	Yes	BT, WLAN	NA
BT	2450	DT	NA	GSM, WCDMA, LTE	NA
WLAN	2450	V/D	Yes	GSM, WCDMA, LTE	NA

VO: Voice CMRS/PSTN Service Only V/D: Voice CMRS/PSTN and Data Service DT: Digital Transport

* HAC Rating was not based on concurrent voice and data modes, Non current mode was found to represent worst case rating for both M and T rating

©Copyright. All rights reserved by CTTL.

4 CONDUCTED OUTPUT POWER MEASUREMENT

4.1 Summary

During the process of testing, the EUT was controlled via Agilent Digital Radio Communication tester (E5515C) to ensure the maximum power transmission and proper modulation. This result contains conducted output power for the EUT. In all cases, the measured output power should be greater and within 5% than EMI measurement.

4.2 Conducted Power

GSM 850MHz	**Conducted Power (dBm)**		
	Channel 251(848.8MHz)	**Channel 190(836.6MHz)**	**Channel 128(824.2MHz)**
	32.65	32.77	32.74
GSM 1900MHz	**Conducted Power(dBm)**		
	Channel 810(1909.8MHz)	**Channel 661(1880MHz)**	**Channel 512(1850.2MHz)**
	29.72	29.90	30.44
WCDMA 850MHz	**Conducted Power (dBm)**		
	Channel 4233(846.6MHz)	**Channel 4182(836.4MHz)**	**Channel 4132(826.4MHz)**
	23.91	23.89	23.85
WCDMA 1700MHz	**Conducted Power (dBm)**		
	Channel 1513 (1752.6MHz)	**Channel 1412 (1732.4MHz)**	**Channel 1312 (1712.4MHz)**
	24.04	24.05	24.08
WCDMA 1900MHz	**Conducted Power (dBm)**		
	Channel 9538(1907.6MHz)	**Channel 9400(1880MHz)**	**Channel 9262(1852.4MHz)**
	23.98	23.88	23.95
LTE Band2 QPSK	**Conducted Power (dBm)**		
	Channel 19100(1900MHz)	**Channel18900(1880MHz)**	**Channel 18700(1860MHz)**
	23.19	23.20	23.24
LTE Band5 QPSK	**Conducted Power (dBm)**		
	Channel 20600(844MHz)	**Channel 20525(836.5MHz)**	**Channel20450(829MHz)**
	23.03	22.89	22.91
LTE Band7 QPSK	**Conducted Power (dBm)**		
	Channel 21350(2560MHz)	**Channel21100(2535MHz)**	**Channel 20850(2510MHz)**
	23.90	23.94	23.86
LTE Band12 QPSK	**Conducted Power (dBm)**		
	Channel 23130(711MHz)	**Channel 23095(707.5MHz)**	**Channel23060(704MHz)**
	23.35	23.16	23.30
LTE Band13 QPSK	**Conducted Power (dBm)**		
	Channel 23230(782MHz)		
	23.23		
LTE Band66 QPSK	**Conducted Power (dBm)**		
	Channel 132572(1770MHz)	**Channel 132322(1745MHz)**	**Channel 132072(1720MHz)**
	23.19	23.28	23.41

©Copyright. All rights reserved by CTTL.

LTE Band71 QPSK	**Conducted Power (dBm)**		
	Channel 133372(688MHz)	**Channel 133297(680.5MHz)**	**Channel 133222(673MHz)**
	23.44	23.32	23.38
LTE Band2 16-QAM	**Conducted Power (dBm)**		
	Channel 19100(1900MHz)	**Channel18900(1880MHz)**	**Channel 18700(1860MHz)**
	22.75	22.64	22.75
LTE Band5 16-QAM	**Conducted Power (dBm)**		
	Channel 20600(844MHz)	**Channel 20525(836.5MHz)**	**Channel20450(829MHz)**
	22.24	21.92	21.80
LTE Band7 16-QAM	**Conducted Power (dBm)**		
	Channel 21350(2560MHz)	**Channel21100(2535MHz)**	**Channel 20850(2510MHz)**
	23.32	23.33	23.08
LTE Band12 16-QAM	**Conducted Power (dBm)**		
	Channel 23130(711MHz)	**Channel 23095(707.5MHz)**	**Channel23060(704MHz)**
	22.62	22.20	22.15
LTE Band13 16-QAM	**Conducted Power (dBm)**		
	Channel 23230(782MHz)		
	22.48		
LTE Band66 16-QAM	**Conducted Power (dBm)**		
	Channel 132572(1770MHz)	**Channel 132322(1745MHz)**	**Channel 132072(1720MHz)**
	22.41	22.48	22.41
LTE Band71 16-QAM	**Conducted Power (dBm)**		
	Channel 133372(688MHz)	**Channel 133297(680.5MHz)**	**Channel 133222(673MHz)**
	22.61	22.56	22.59
2.4GHz 802.11b 5.5M	**Conducted Power (dBm)**		
	Channel 11 (2462MHz)	**Channel 6 (2437MHz)**	**Channel 1 (2412MHz)**
	14.39	13.28	12.92
5GHz 802.11n-20M MCS5	**Conducted Power (dBm)**		
	Channel 44 (5220MHz)		
	18.38		

5 Reference Documents

5.1 Reference Documents for testing

The following document listed in this section is referred for testing.

Reference	Title	Version
ANSI C63.19-2011	American National Standard for Methods of Measurement of Compatibility between Wireless Communication Devices and Hearing Aids	2011 Edition
FCC 47 CFR §20.19	Hearing Aid Compatible Mobile Headsets	2015 Edition
KDB 285076 D01	Equipment Authorization Guidance for Hearing Aid Compatibility	v04

©Copyright. All rights reserved by CTTL.

6 OPERATIONAL CONDITIONS DURING TEST

6.1 HAC MEASUREMENT SET-UP

These measurements are performed using the DASY5 NEO automated dosimetric assessment system. It is made by Schmid & Partner Engineering AG (SPEAG) in Zurich, Switzerland. It consists of high precision robotics system (Stäubli), robot controller, Intel Core2 computer, near-field probe, probe alignment sensor. The robot is a six-axis industrial robot performing precise movements. A cell controller system contains the power supply, robot controller, teach pendant (Joystick),and remote control, is used to drive the robot motors. The PC consists of the HP Intel Core21.86 GHz computer with Windows XP system and HAC Measurement Software DASY5 NEO, A/D interface card, monitor, mouse, and keyboard. The Stäubli Robot is connected to the cell controller to allow software manipulation of the robot. A data acquisition electronic (DAE)circuit performs the signal amplification, signal multiplexing, AD-conversion, offset measurements, mechanical surface detection, collision detection, etc. is connected to the Electro-optical coupler (EOC). The EOC performs the conversion from the optical into digital electric signal of the DAE and transfers data to the PC plug-in card.

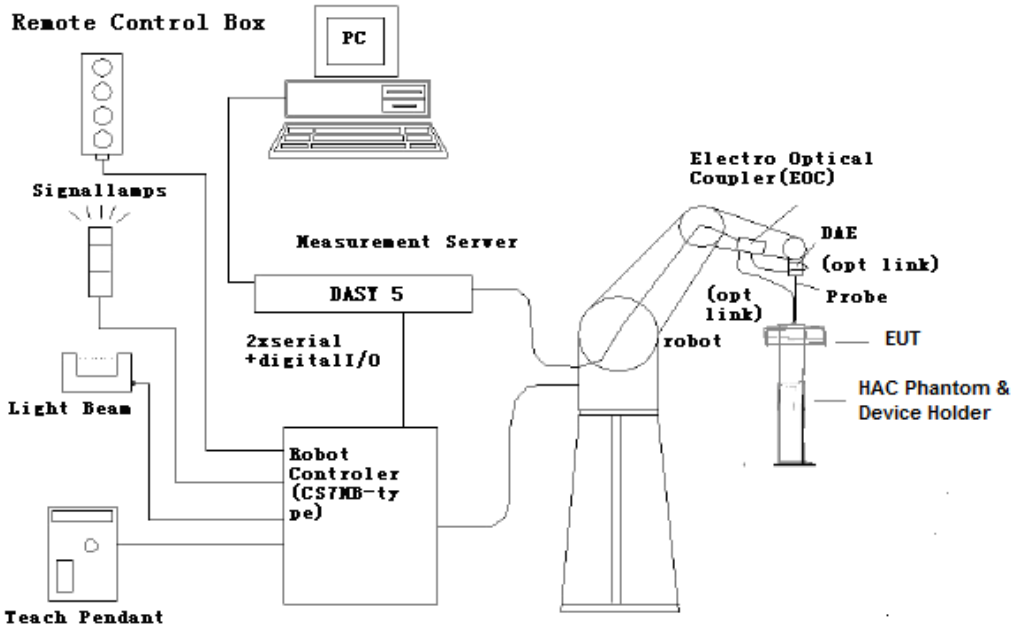

Fig. 1 HAC Test Measurement Set-up

The DAE4 consists of a highly sensitive electrometer-grade preamplifier with auto-zeroing, a channel and gain-switching multiplexer, a fast 16 bit AD-converter and a command decoder and control logic unit. Transmission to the PC-card is accomplished through an optical downlink for data and status information and an optical uplink for commands and clock lines. The mechanical probe mounting device includes two different sensor systems for frontal and sidewise probe contacts. They are also used for mechanical surface detection and probe collision detection. The robot uses its own controller with a built in VME-bus computer.

©Copyright. All rights reserved by CTTL.

6.2 Probe Specification

E-Field Probe Description

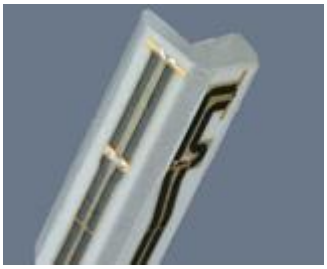

[ER3DV6]

Construction	One dipole parallel, two dipoles normal to probe axis Built-in shielding against static charges PEEK enclosure material
Calibration	In air from 100 MHz to 3.0 GHz (absolute accuracy ±6.0%, k=2)
Frequency	40 MHz to > 6 GHz (can be extended to < 20 MHz) Linearity: ± 0.2 dB (100 MHz to 3 GHz)
Directivity	± 0.2 dB in air (rotation around probe axis) ± 0.4 dB in air (rotation normal to probe axis)
Dynamic Range	2 V/m to > 1000 V/m; Linearity: ± 0.2 dB
Dimensions	Overall length: 330 mm (Tip: 16 mm) Tip diameter: 8 mm (Body: 12 mm) Distance from probe tip to dipole centers: 2.5 mm
Application	General near-field measurements up to 6 GHz Field component measurements Fast automatic scanning in phantoms

©Copyright. All rights reserved by CTTL.

6.3Test Arch Phantom &Phone Positioner

The Test Arch phantom should be positioned horizontally on a stable surface. Reference markings on the Phantom allow the complete setup of all predefined phantom positions and measurement grids by manually teaching three points in the robot. It enables easy and well defined positioning of the phone and validation dipoles as well as simple teaching of the robot (Dimensions: 370 x 370 x 370 mm).

The Phone Positioner supports accurate and reliable positioning of any phone with effect on near field <±0.5 dB.

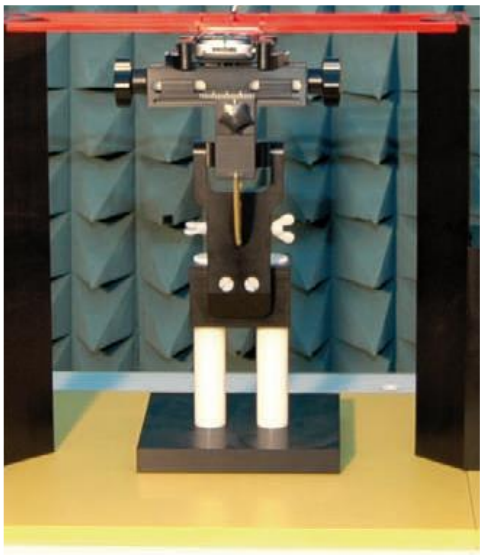

Fig. 2 HAC Phantom & Device Holder

6.4Robotic System Specifications

Specifications

Positioner: Stäubli Unimation Corp. Robot Model: RX160L
Repeatability: ±0.02 mm
No. of Axis: 6

Data Acquisition Electronic (DAE) System

Cell Controller
Processor: Intel Core2
Clock Speed: 1.86GHz
Operating System: Windows XP
Data Converter
Features: Signal Amplifier, multiplexer, A/D converter, and control logic
Software: DASY5 software
Connecting Lines: Optical downlink for data and status info.
Optical uplink for commands and clock

©Copyright. All rights reserved by CTTL.

7 EUT ARRANGEMENT

7.1 WD RF Emission Measurements Reference and Plane

Figure 4 illustrates the references and reference plane that shall be used in the WD emissions measurement.

- The grid is 5 cm by 5 cm area that is divided into 9 evenly sized blocks or sub-grids.
- The grid is centered on the audio frequency output transducer of the WD (speaker or T-coil).
- The grid is located by reference to a reference plane. This reference plane is the planar area that contains the highest point in the area of the WD that normally rests against the user's ear
- The measurement plane is located parallel to the reference plane and 15 mm from it, out from the phone. The grid is located in the measurement plane.

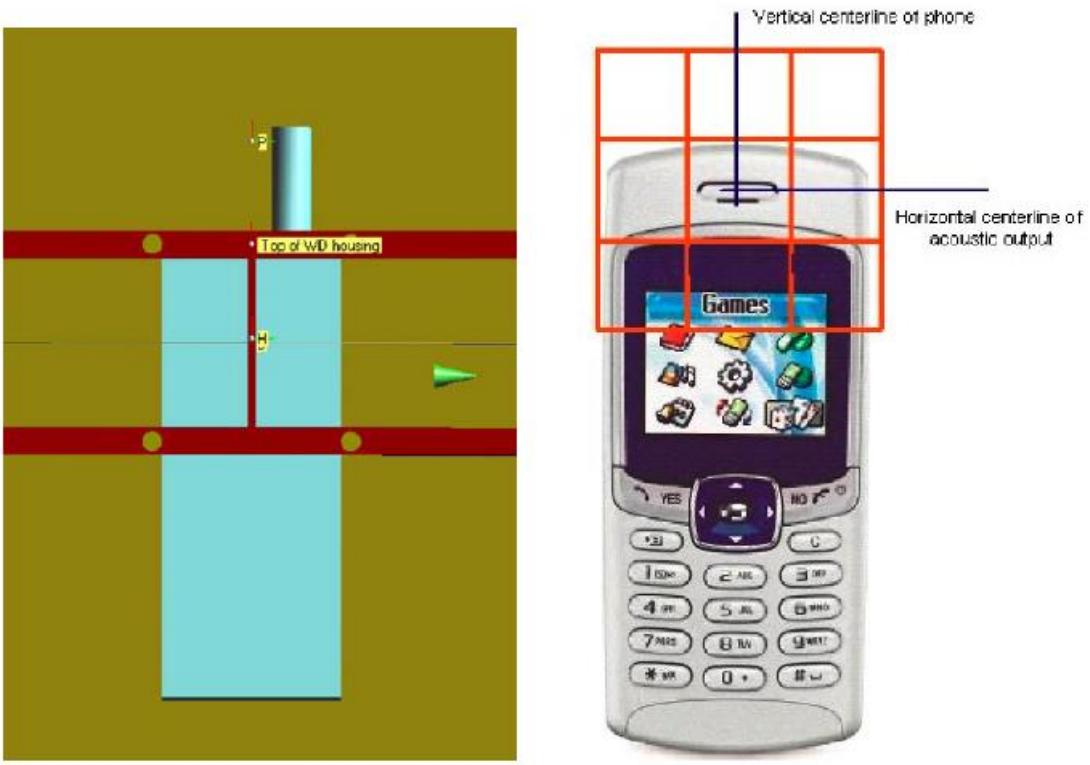

Fig. 3 WD reference and plane for RF emission measurements

©Copyright. All rights reserved by CTTL.

8 SYSTEM VALIDATION

8.1 Validation Procedure

Place a dipole antenna meeting the requirements given in ANSI C63.19 in the position normally occupied by the WD. The dipole antenna serves as a known source for an electrical output. Position the E-field probes so that:

•The probes and their cables are parallel to the coaxial feed of the dipole antenna

•The probe cables and the coaxial feed of the dipole antenna approach the measurement area from opposite directions

• The center point of the probe element(s) are 15 mm from the closest surface of the dipole elements.

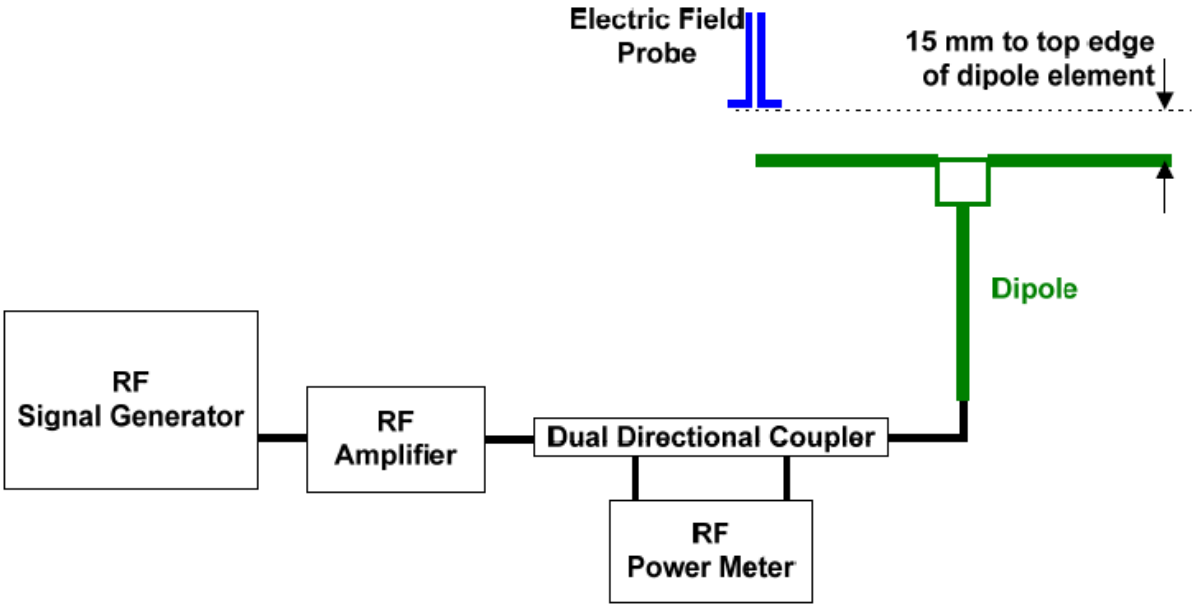

Fig. 4 Dipole Validation Setup

8.2 Validation Result

E-Field Scan						
Mode	**Frequency (MHz)**	**Input Power (mW)**	**Measured[1] Value(dBV/m)**	**Target[2] Value(dBV/m)**	**Deviation[3] (%)**	**Limit[4] (%)**
CW	835	100	40.53	40.67	-1.60	±25
CW	1880	100	39.45	39.24	2.45	±25

Notes:

1. Please refer to the attachment for detailed measurement data and plot.
2. Target value is provided by SPEAD in the calibration certificate of specific dipoles.
3. Deviation (%) = 100 * (Measured value minus Target value) divided by Target value.
4. ANSI C63.19 requires values within ± 25% are acceptable, of which 12% is deviation and 13% is measurement uncertainty. Values independently validated for the dipole actually used in the measurements should be used, when available.

©Copyright. All rights reserved by CTTL.

9 Evaluation of MIF

9.1 Introduction

The MIF (Modulation Interference Factor) is used to classify E-field emission to determine Hearing Aid Compatibility (HAC). It scales the power-averaged signal to the RF audio interference level and is characteristic to a modulation scheme. The HAC standard preferred "indirect" measurement method is based on average field measurement with separate scaling by the MIF. With an Audio Interference Analyzer (AIA) designed by SPEAG specifically for the MIF measurement, these values have been verified by practical measurements on an RF signal modulated with each of the waveforms. The resulting deviations from the simulated values are within the requirements of the HAC standard.

The AIA (Audio Interference Analyzer) is an USB powered electronic sensor to evaluate signals in the frequency range 698MHz - 6 GHz. It contains RMS detector and audio frequency circuits for sampling of the RF envelope.

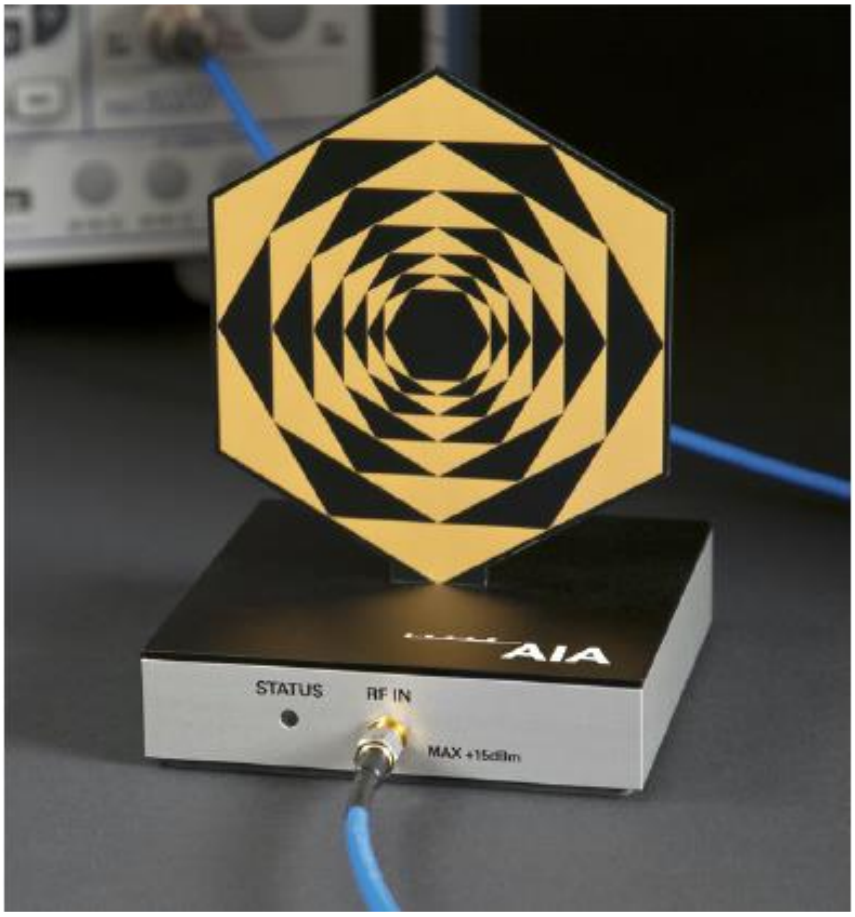

Fig. 5 AIA Front View

©Copyright. All rights reserved by CTTL.

9.2 MIF measurement with the AIA

The MIF is measured with the AIA as follows:

1. Connect the AIA via USB to the DASY5 PC and verify the configuration settings.
2. Couple the RF signal to be evaluated to an AIA via cable or antenna.
3. Generate a MIF measurement job for the unknown signal and select the measurement port and timing settings.
4. Document the results via the post processor in a report.

9.3 Test equipment for the MIF measurement

No.	Name	Type	Serial Number	Manufacturer
01	Signal Generator	E4438C	MY49071430	Agilent
02	AIA	SE UMS 170 CB	1029	SPEAG
03	BTS	E5515C	MY50263375	Agilent

9.4 Test signal validation

The signal generator (E4438C) is used to generate a 1GHz signal with different modulation in the below table based on the ANSI C63.19-2011. The measured MIF with AIA are compared with the target values given in ANSI C63.19-2011 table D.3, D.4 and D5.

Pulse modulation	**Target MIF**	**Measured MIF**	**Deviation**
0.5ms pulse, 1000Hz repetition rate	-0.9 dB	-0.9 dB	0 dB
1ms pulse, 100Hz repetition rate	+3.9 dB	+3.7 dB	0.2 dB
0.1ms pulse, 100Hz repetition rate	+10.1 dB	+10.0 dB	0.1 dB
10ms pulse, 10Hz repetition rate	+1.6 dB	+1.7 dB	0.1 dB
Sine-wave modulation	**Target MIF**	**Measured MIF**	**Deviation**
1 kHz, 80% AM	-1.2 dB	-1.3 dB	0.1 dB
1 kHz, 10% AM	-9.1 dB	-9.0 dB	0.1 dB
1 kHz, 1% AM	-19.1 dB	-18.9 dB	0.2 dB
100 Hz, 10% AM	-16.1 dB	-16.0 dB	0.1 dB
10 kHz, 10% AM	-21.5 dB	-21.6 dB	0.1 dB
Transmission protocol	**Target MIF**	**Measured MIF**	**Deviation**
GSM; full-rate version 2; speech codec/handset low	+3.5 dB	+3.47 dB	0.03 dB
WCDMA; speech; speech codec low; AMR 12.2 kb/s	-20.0 dB	-19.8 dB	0.2 dB
CDMA; speech; SO3; RC3; full frame rate; 8kEVRC	-19.0 dB	-19.1 dB	0.1 dB
CDMA; speech; SO3; RC1; 1/8th frame rate; 8kEVRC	+3.3 dB	+3.44 dB	0.14 dB

©Copyright. All rights reserved by CTTL.

9.5 DUT MIF results

Typical MIF levels in ANSI C63.19-2011	
Transmission protocol	Modulation interference factor
GSM; full-rate version 2; speech codec/handset low	+3.5 dB
WCDMA; speech; speech codec low; AMR 12.2 kb/s	-20.0 dB
LTE-FDD (SC-FDMA, 1RB, 20MHz, QPSK)	-15.63 dB
LTE-FDD (SC-FDMA, 1RB, 20MHz, 16QAM)	-9.76 dB

Measured MIF levels		
Band	Channel	Modulation interference factor (dB)
GSM 850	251	3.44
	190	3.45
	128	3.5
GSM 1900	810	3.43
	661	3.43
	512	3.44
WCDMA 850	4233	-23.71
	4182	-23.2
	4132	-23.22
WCDMA 1700	1513	-22.71
	1412	-22.84
	1312	-22.91
WCDMA 1900	9538	-22.93
	9400	-22.42
	9262	-22.91
LTE Band2 QPSK	19100	-15.32
	18900	-14.7
	18700	-15.14
LTE Band5 QPSK	20600	-15.24
	20525	-15.09
	20450	-14.58
LTE Band7 QPSK	21350	-14.89
	21100	-14.89
	20850	-14.31
LTE Band12 QPSK	23130	-14.13
	23095	-14.18
	23060	-14.20
LTE Band13 QPSK	23230	-14.83
LTE Band66 QPSK	132572	-14.63
	132322	-14.77
	132072	-14.63

©Copyright. All rights reserved by CTTL.

LTE Band2 16QAM	19100	-10.44
	18900	-10.62
	18700	-9.71
LTE Band5 16QAM	20600	-10.19
	20525	-11.25
	20450	-10.99
LTE Band7 16QAM	21350	-10.11
	21100	-10.82
	20850	-11.19
LTE Band12 16QAM	23130	-10.99
	23095	-11.15
	23060	-10.59
LTE Band13 16QAM	23230	-11.17
LTE Band66 16QAM	132572	-10.65
	132322	-10.64
	132072	-10.71
2.4GHz 802.11b 5.5M	11	-10.16
	6	-10.45
	1	-9.41
5GHz 802.11n-20M MCS5	44	-10.11

©Copyright. All rights reserved by CTTL.

10 Evaluation for low-power exemption

10.1 Product testing threshold

There are two methods for exempting an RF air interface technology from testing. The first method requires evaluation of the MIF for the worst-case operating mode. An RF air interface technology of a device is exempt from testing when its average antenna input power plus its MIF is≤17 dBm for any of its operating modes. The second method does not require determination of the MIF. The RF emissions testing exemption shall be applied to an RF air interface technology in a device whose peak antenna input power, averaged over intervals ≤50 μs20, is ≤23 dBm. An RF air interface technology that is exempted from testing by either method shall be rated as M4.
The first method is used to be exempt from testing for the RF air interface technology in this report.

10.2 Conducted power

Band	Average power (dBm)	MIF (dB)	Sum (dBm)
GSM 850	32.77	3.5	36.27
GSM 1900	30.44	3.44	33.88
WCDMA 850	23.91	-23.2	0.71
WCDMA 1700	24.08	-22.71	1.37
WCDMA 1900	23.98	-22.42	1.56
LTE B2	23.24	-14.7	8.54
LTE B5	23.03	-14.58	8.45
LTE B7	23.94	-14.31	9.63
LTE B12	23.35	-14.13	9.22
LTE B13	23.23	-14.83	8.4
LTE B66	23.41	-14.63	8.78
WiFi-2.4G	14.39	-9.41	4.98
WiFi-5G	18.38	-10.11	8.27

10.3 Conclusion

According to the above table, the sums of average power and MIF for UMTS, LTE and WiFi are less than 17dBm. So it is only measured for GSM bands. The UMTS, LTE and WiFi are exempt from testing and rated as M4.

©Copyright. All rights reserved by CTTL.

11 RF TEST PROCEDUERES

The evaluation was performed with the following procedure:

1) Confirm proper operation of the field probe, probe measurement system and other instrumentation and the positioning system.

2) Position the WD in its intended test position. The gauge block can simplify this positioning.

3) Configure the WD normal operation for maximum rated RF output power, at the desired channel and other operating parameters (e.g., test mode), as intended for the test.

4) The center sub-grid shall centered on the center of the T-Coil mode axial measurement point or the acoustic output, as appropriate. Locate the field probe at the initial test position in the50 mm by 50 mm grid, which is contained in the measurement plane. If the field alignment method is used, align the probe for maximum field reception.

5) Record the reading.

6) Scan the entire 50 mm by 50 mm region in equally spaced increments and record the reading at each measurement point. The distance between measurement points shall be sufficient to assure the identification of the maximum reading.

7) Identify the five contiguous sub-grids around the center sub-grid whose maximum reading is the lowest of all available choices. This eliminates the three sub-grids with the maximum readings. Thus, the six areas to be used to determine the WD's highest emissions are identified.

8) Identify the maximum field reading within the non-excluded sub-grids identified in Step 7)

9) Evaluate the MIF and add to the maximum steady-state rms field-strength reading to obtain the RF audio interference level..

10) Compare this RF audio interference level with the categories and record the resulting WD category rating.

©Copyright. All rights reserved by CTTL.

12 Measurement Results (E-Field)

Frequency		Measured Value(dBV/m)	Power Drift (dB)	Category
MHz	Channel			
GSM 850				
848.8	251	30.8	0.01	**M4** (see Fig B.1)
836.6	190	31.86	0.04	**M4** (see Fig B.2)
824.2	128	32.54	-0.07	**M4** (see Fig B.3)
GSM 1900				
1909.8	810	28.18	0.03	**M4** (see Fig B.4)
1880	661	27.82	0.06	**M4** (see Fig B.5)
1850.2	512	28.66	0.17	**M4** (see Fig B.6)

13 ANSIC 63.19-2011 LIMITS

WD RF audio interference level categories in logarithmic units

Emission categories	**< 960 MHz**	
	E-field emissions	
Category M1	50 to 55	dB (V/m)
Category M2	45 to 50	dB (V/m)
Category M3	40 to 45	dB (V/m)
Category M4	< 40	dB (V/m)
Emission categories	**>960 MHz**	
	E-field emissions	
Category M1	40 to 45	dB (V/m)
Category M2	35 to 40	dB (V/m)
Category M3	30 to 35	dB (V/m)
Category M4	< 30	dB (V/m)

©Copyright. All rights reserved by CTTL.

14 MEASUREMENT UNCERTAINTY

No.	Error source	Type	Uncertainty Value(%)	Prob. Dist.	k	c_iE	Standard Uncertainty (%) u_i' (%)E	Degree of freedom V_{eff}or v_i
Measurement System								
1	Probe Calibration	B	5.	N	1	1	5.1	∞
2	Axial Isotropy	B	4.7	R	$\sqrt{3}$	1	2.7	∞
3	Sensor Displacement	B	16.5	R	$\sqrt{3}$	1	9.5	∞
4	Boundary Effects	B	2.4	R	$\sqrt{3}$	1	1.4	∞
5	Linearity	B	4.7	R	$\sqrt{3}$	1	2.7	∞
6	Scaling to Peak Envelope Power	B	2.0	R	$\sqrt{3}$	1	1.2	∞
7	System Detection Limit	B	1.0	R	$\sqrt{3}$	1	0.6	∞
8	Readout Electronics	B	0.3	N	1	1	0.3	∞
9	Response Time	B	0.8	R	$\sqrt{3}$	1	0.5	∞
10	Integration Time	B	2.6	R	$\sqrt{3}$	1	1.5	∞
11	RF Ambient Conditions	B	3.0	R	$\sqrt{3}$	1	1.7	∞
12	RF Reflections	B	12.0	R	$\sqrt{3}$	1	6.9	∞
13	Probe Positioner	B	1.2	R	$\sqrt{3}$	1	0.7	∞
14	Probe Positioning	A	4.7	R	$\sqrt{3}$	1	2.7	∞
15	Extra. And Interpolation	B	1.0	R	$\sqrt{3}$	1	0.6	∞
Test Sample Related								
16	Device Positioning Vertical	B	4.7	R	$\sqrt{3}$	1	2.7	∞
17	Device Positioning Lateral	B	1.0	R	$\sqrt{3}$	1	0.6	∞
18	Device Holder and Phantom	B	2.4	R	$\sqrt{3}$	1	1.4	∞
19	Power Drift	B	5.0	R	$\sqrt{3}$	1	2.9	∞

©Copyright. All rights reserved by CTTL.

20	AIA measurement	B	12	R	$\sqrt{3}$	1	6.9	∞
Phantom and Setup related								
21	Phantom Thickness	B	2.4	R	$\sqrt{3}$	1	1.4	∞
Combined standard uncertainty(%)							16.2	
Expanded uncertainty (confidence interval of 95 %)		$u_e = 2u_c$		N	k=2		32.4	

15 MAIN TEST INSTRUMENTS

Table 1: List of Main Instruments

No.	Name	Type	Serial Number	Calibration Date	Valid Period
01	Signal Generator	E4438C	MY49071430	January 2, 2018	One Year
02	Power meter	NRVD	102083	November 01, 2017	One year
03	Power sensor	NRV-Z5	100542		
04	Amplifier	60S1G4	0331848	No Calibration Requested	
05	AIA	SE UMS 170 CB	1029	No Calibration Requested	
06	E-Field Probe	ER3DV6	2272	December 19, 2017	One year
07	DAE	SPEAG DAE4	777	September 8, 2017	One year
08	HAC Dipole	CD835V3	1023	August 23, 2017	One year
09	HAC Dipole	CD1880V3	1018	August 23, 2017	One year
10	BTS	E5515C	MY50263375	January 23, 2018	One year
11	BTS	CMW 500	164049	September 12, 2017	One year

16 CONCLUSION

The HAC measurement indicates that the EUT complies with the HAC limits of the ANSIC63.19-2011. The total M-rating is **M4.**

END OF REPORT BODY

©Copyright. All rights reserved by CTTL.

ANNEX A TEST LAYOUT

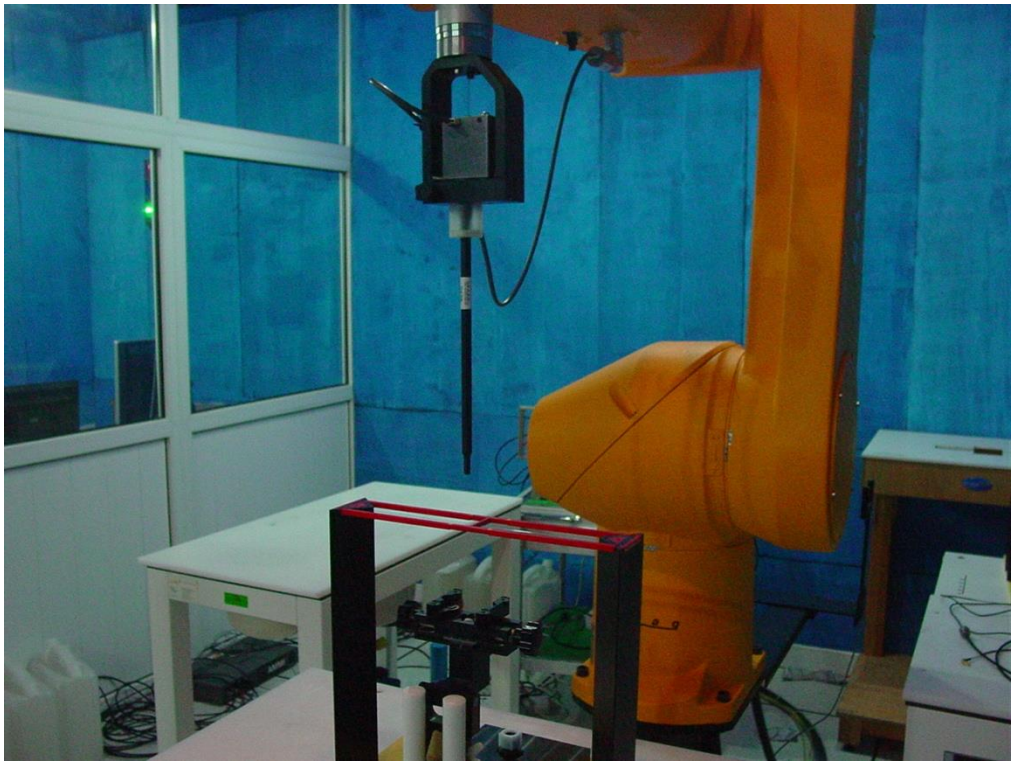

Picture A1:HAC RF System Layout

©Copyright. All rights reserved by CTTL.

ANNEX B TEST PLOTS

HAC RF E-Field GSM 850 High

Date: 2018-4-9

Electronics: DAE4 Sn777

Medium: Air

Medium parameters used: $\sigma = 0$ mho/m, $\varepsilon_r = 1$; $\rho = 1000$ kg/m^3

Ambient Temperature: 22.0ºC

Communication System: GSM 850; Frequency: 848.8 MHz; Duty Cycle: 1:8.3

Probe: ER3DV6 - SN2272;ConvF(1, 1, 1)

E Scan - ER3DV6 - 2011: 15 mm from Probe Center to the Device/Hearing Aid Compatibility Test (101x101x1): Interpolated grid: dx=0.5000 mm, dy=0.5000 mm

Device Reference Point: 0, 0, -6.3 mm

Reference Value = 28.88 V/m; Power Drift = 0.01 dB

Applied MIF = 3.44 dB

RF audio interference level = 30.80 dBV/m

Emission category: M4

MIF scaled E-field

Grid 1 **M4** **30.79 dBV/m**	Grid 2 **M4** **30.87 dBV/m**	Grid 3 **M4** **30.56 dBV/m**
Grid 4 **M4** **30.53 dBV/m**	Grid 5 **M4** **30.8 dBV/m**	Grid 6 **M4** **30.58 dBV/m**
Grid 7 **M4** **30.27 dBV/m**	Grid 8 **M4** **30.64 dBV/m**	Grid 9 **M4** **30.35 dBV/m**

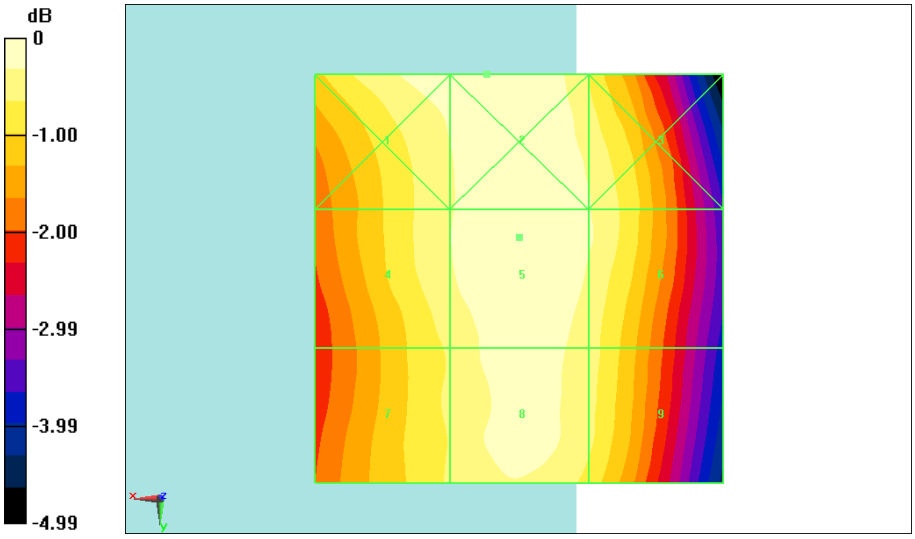

0 dB = 34.94 V/m = 30.87 dBV/m

Fig B.1 HAC RF E-Field GSM 850 High

©Copyright. All rights reserved by CTTL.

HAC RF E-Field GSM 850 Middle

Date: 2018-4-9

Electronics: DAE4 Sn777

Medium: Air

Medium parameters used: $\sigma = 0$ mho/m, $\varepsilon_r = 1$; $\rho = 1000$ kg/m^3

Ambient Temperature: 22.0ºC

Communication System: GSM 850; Frequency: 836.6 MHz; Duty Cycle: 1:8.3

Probe: ER3DV6 - SN2272;ConvF(1, 1, 1)

E Scan - ER3DV6 - 2011: 15 mm from Probe Center to the Device 2/Hearing Aid Compatibility Test (101x101x1): Interpolated grid: dx=0.5000 mm, dy=0.5000 mm

Device Reference Point: 0, 0, -6.3 mm

Reference Value = 32.42 V/m; Power Drift = 0.04 dB

Applied MIF = 3.45 dB

RF audio interference level = 31.86 dBV/m

Emission category: M4

MIF scaled E-field

Grid 1 **M4** **31.78 dBV/m**	Grid 2 **M4** **31.85 dBV/m**	Grid 3 **M4** **31.53 dBV/m**
Grid 4 **M4** **31.62 dBV/m**	Grid 5 **M4** **31.86 dBV/m**	Grid 6 **M4** **31.57 dBV/m**
Grid 7 **M4** **31.49 dBV/m**	Grid 8 **M4** **31.76 dBV/m**	Grid 9 **M4** **31.39 dBV/m**

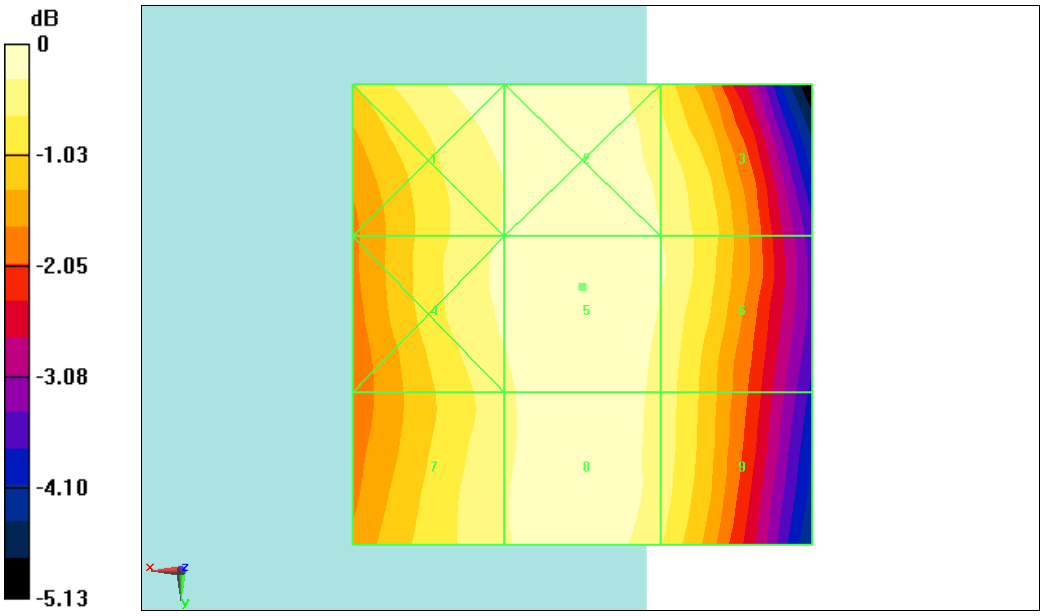

0 dB = 39.18 V/m = 31.86 dBV/m

Fig B.2 HAC RF E-Field GSM 850 Middle

©Copyright. All rights reserved by CTTL.

HAC RF E-Field GSM 850 Low

Date: 2018-4-9

Electronics: DAE4 Sn777

Medium: Air

Medium parameters used: $\sigma = 0$ mho/m, $\varepsilon_r = 1$; $\rho = 1000$ kg/m^3

Ambient Temperature: 22.0ºC

Communication System: GSM 850; Frequency: 824.2 MHz; Duty Cycle: 1:8.3

Probe: ER3DV6 - SN2272;ConvF(1, 1, 1)

E Scan - ER3DV6 - 2011: 15 mm from Probe Center to the Device 3/Hearing Aid Compatibility Test (101x101x1): Interpolated grid: dx=0.5000 mm, dy=0.5000 mm

Device Reference Point: 0, 0, -6.3 mm

Reference Value = 35.18 V/m; Power Drift = -0.07 dB

Applied MIF = 3.50 dB

RF audio interference level = 32.54 dBV/m

Emission category: M4

MIF scaled E-field

Grid 1 **M4** **32.38 dBV/m**	Grid 2 **M4** **32.47 dBV/m**	Grid 3 **M4** **32.15 dBV/m**
Grid 4 **M4** **32.36 dBV/m**	Grid 5 **M4** **32.54 dBV/m**	Grid 6 **M4** **32.16 dBV/m**
Grid 7 **M4** **32.39 dBV/m**	Grid 8 **M4** **32.59 dBV/m**	Grid 9 **M4** **32.13 dBV/m**

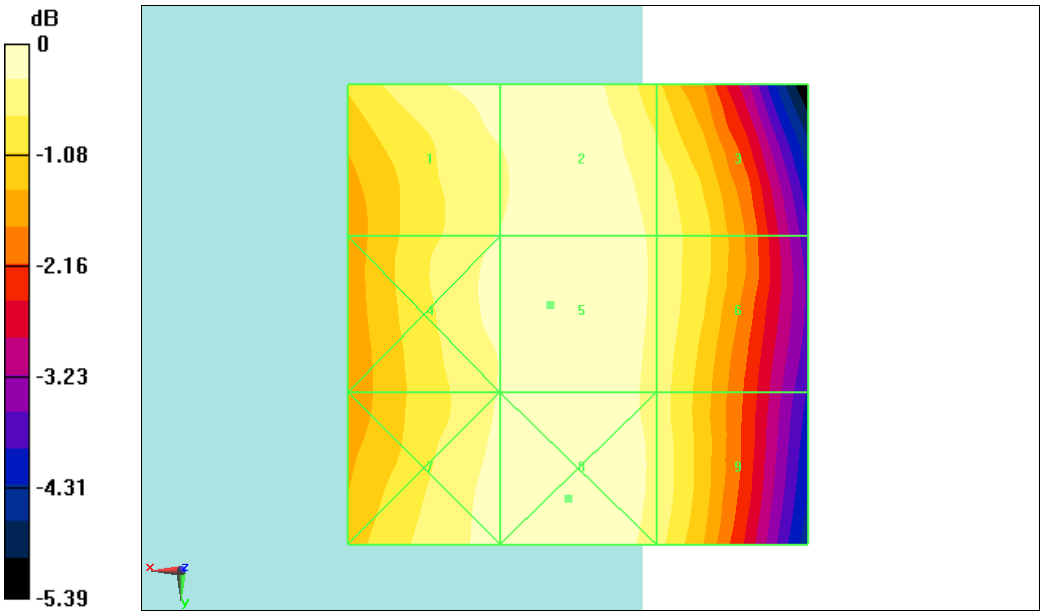

0 dB = 42.59 V/m = 32.59 dBV/m

Fig B.3 HAC RF E-Field GSM 850 Low

©Copyright. All rights reserved by CTTL.

HAC RF E-Field GSM 1900 High

Date: 2018-4-9

Electronics: DAE4 Sn777

Medium: Air

Medium parameters used: $\sigma = 0$ mho/m, $\varepsilon_r = 1$; $\rho = 1000$ kg/m^3

Ambient Temperature: 22.0ºC

Communication System: DCS 1900; Frequency: 1909.8 MHz; Duty Cycle: 1:8.3

Probe: ER3DV6 - SN2272;ConvF(1, 1, 1)

E Scan - ER3DV6 - 2011: 15 mm from Probe Center to the Device/Hearing Aid Compatibility Test (101x101x1): Interpolated grid: dx=0.5000 mm, dy=0.5000 mm

Device Reference Point: 0, 0, -6.3 mm

Reference Value = 18.14 V/m; Power Drift = 0.03 dB

Applied MIF = 3.43 dB

RF audio interference level = 28.18 dBV/m

Emission category: M4

MIF scaled E-field

Grid 1 **M4** **23.45 dBV/m**	Grid 2 **M4** **27.73 dBV/m**	Grid 3 **M4** **28.2 dBV/m**
Grid 4 **M4** **25.07 dBV/m**	Grid 5 **M4** **28.15 dBV/m**	Grid 6 **M4** **28.17 dBV/m**
Grid 7 **M4** **26.44 dBV/m**	Grid 8 **M4** **28.18 dBV/m**	Grid 9 **M4** **28.19 dBV/m**

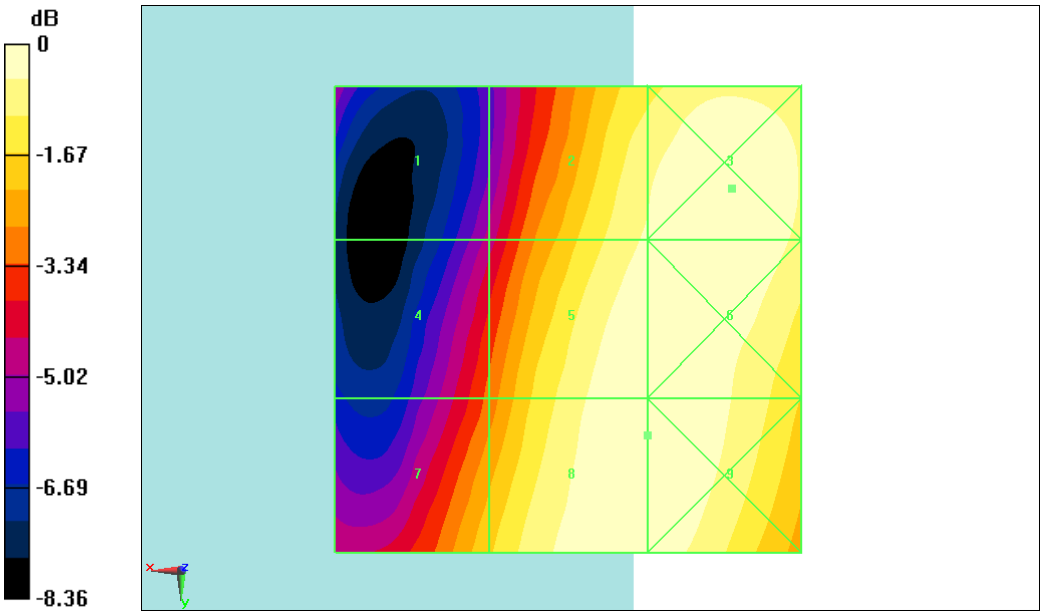

0 dB = 25.70 V/m = 28.20 dBV/m

Fig B.4 HAC RF E-Field GSM 1900 High

©Copyright. All rights reserved by CTTL.

HAC RF E-Field GSM 1900 Middle

Date: 2018-4-9

Electronics: DAE4 Sn777

Medium: Air

Medium parameters used: $\sigma = 0$ mho/m, $\varepsilon_r = 1$; $\rho = 1000$ kg/m^3

Ambient Temperature: 22.0ºC

Communication System: DCS 1900; Frequency: 1880 MHz; Duty Cycle: 1:8.3

Probe: ER3DV6 - SN2272;ConvF(1, 1, 1)

E Scan - ER3DV6 - 2011: 15 mm from Probe Center to the Device 2/Hearing Aid Compatibility Test (101x101x1): Interpolated grid: dx=0.5000 mm, dy=0.5000 mm

Device Reference Point: 0, 0, -6.3 mm

Reference Value = 16.79 V/m; Power Drift = 0.06 dB

Applied MIF = 3.43 dB

RF audio interference level = 27.82 dBV/m

Emission category: M4

MIF scaled E-field

Grid 1 **M4** **22.96 dBV/m**	Grid 2 **M4** **27.29 dBV/m**	Grid 3 **M4** **28.12 dBV/m**
Grid 4 **M4** **24.63 dBV/m**	Grid 5 **M4** **27.67 dBV/m**	Grid 6 **M4** **27.86 dBV/m**
Grid 7 **M4** **26.19 dBV/m**	Grid 8 **M4** **27.82 dBV/m**	Grid 9 **M4** **27.82 dBV/m**

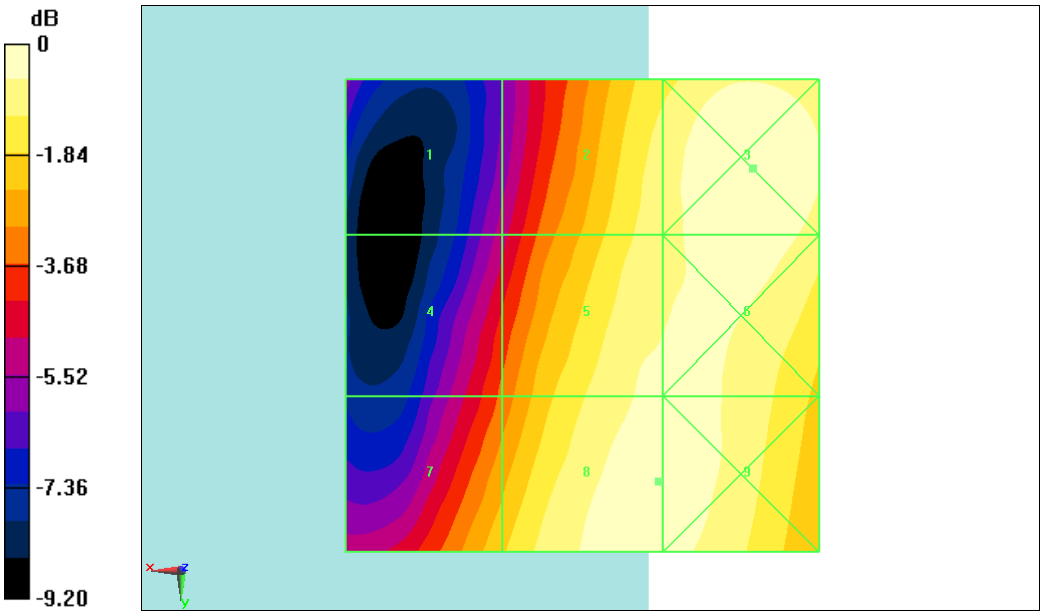

0 dB = 25.46 V/m = 28.12 dBV/m

Fig B.5 HAC RF E-Field GSM 1900 Middle

©Copyright. All rights reserved by CTTL.

HAC RF E-Field GSM 1900 Low

Date: 2018-4-9

Electronics: DAE4 Sn777

Medium: Air

Medium parameters used: $\sigma = 0$ mho/m, $\varepsilon_r = 1$; $\rho = 1000$ kg/m^3

Ambient Temperature: 22.0ºC

Communication System: DCS 1900; Frequency: 1850.2 MHz; Duty Cycle: 1:8.3

Probe: ER3DV6 - SN2272;ConvF(1, 1, 1)

E Scan - ER3DV6 - 2011: 15 mm from Probe Center to the Device 3/Hearing Aid Compatibility Test (101x101x1): Interpolated grid: dx=0.5000 mm, dy=0.5000 mm

Device Reference Point: 0, 0, -6.3 mm

Reference Value = 17.08 V/m; Power Drift = 0.17 dB

Applied MIF = 3.44 dB

RF audio interference level = 28.66 dBV/m

Emission category: M4

MIF scaled E-field

Grid 1 **M4** **23.68 dBV/m**	Grid 2 **M4** **27.72 dBV/m**	Grid 3 **M4** **28.66 dBV/m**
Grid 4 **M4** **25.81 dBV/m**	Grid 5 **M4** **28.51 dBV/m**	Grid 6 **M4** **28.52 dBV/m**
Grid 7 **M4** **27.78 dBV/m**	Grid 8 **M4** **29.18 dBV/m**	Grid 9 **M4** **29.12 dBV/m**

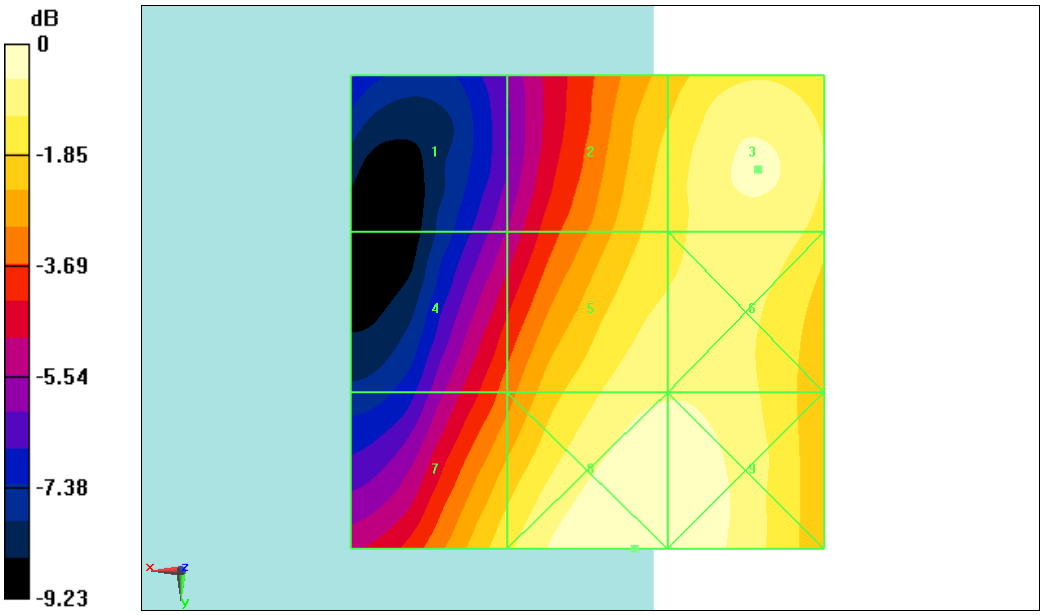

0 dB = 28.76 V/m = 29.18 dBV/m

Fig B.6 HAC RF E-Field GSM 1900 Low

©Copyright. All rights reserved by CTTL.

ANNEX C SYSTEM VALIDATION RESULT

E SCAN of Dipole 835 MHz
Date: 2018-4-9
Electronics: DAE4 Sn777
Medium: Air
Medium parameters used: σ = 0 mho/m, εr = 1; ρ = 1000 kg/m3
Communication System: CW; Frequency: 835 MHz; Duty Cycle: 1:1
Probe: ER3DV6 - SN2272;ConvF(1, 1, 1)
E Scan - measurement distance from the probe sensor center to CD835 Dipole = 15mm/Hearing Aid Compatibility Test (41x361x1): Interpolated grid: dx=0.5000 mm, dy=0.5000 mm
Device Reference Point: 0, 0, -6.3 mm
Reference Value = 106.9 V/m; Power Drift = -0.01 dB
Applied MIF = 0.00 dB
RF audio interference level = 40.53 dBV/m
Emission category: M3

MIF scaled E-field

Grid 1**M3** **40.39 dBV/m**	Grid 2**M3** **40.51 dBV/m**	Grid 3**M3** **40.33 dBV/m**
Grid 4 **M4** **35.93 dBV/m**	Grid 5 **M4** **36.04 dBV/m**	Grid 6 **M4** **35.88 dBV/m**
Grid 7 **M3** **40.34 dBV/m**	Grid 8 **M3** **40.53 dBV/m**	Grid 9 **M3** **40.46 dBV/m**

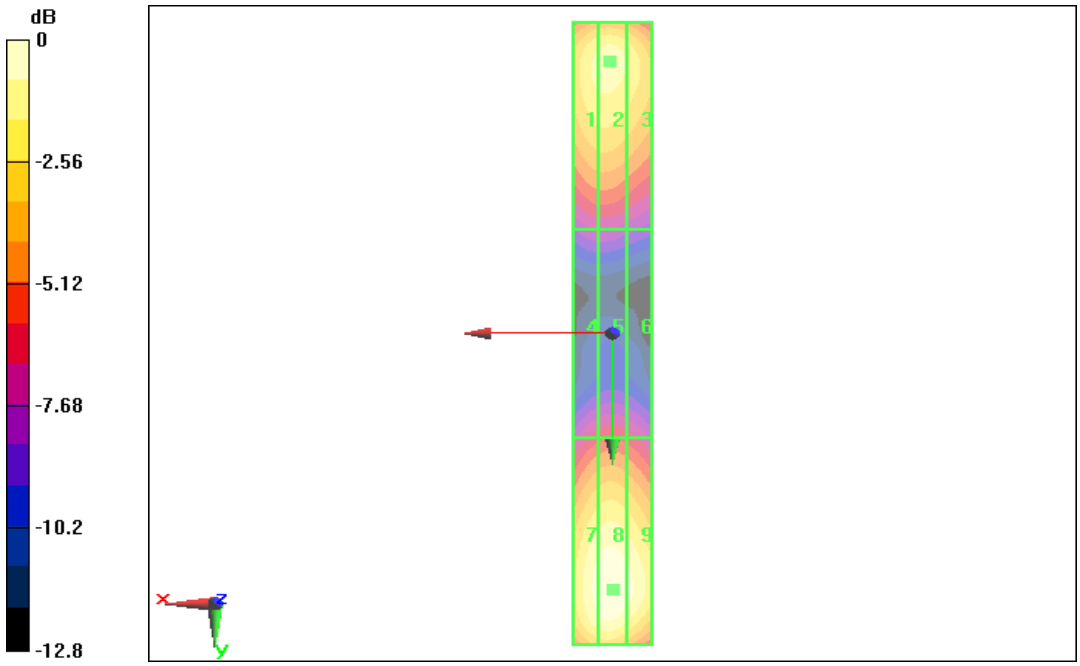

0 dB = 40.53 dBV/m

©Copyright. All rights reserved by CTTL.

E SCAN of Dipole 1880 MHz
Date: 2018-4-9
Electronics: DAE4 Sn777
Medium: Air
Medium parameters used: $\sigma = 0$ mho/m, $\varepsilon_r = 1$; $\rho = 1000$ kg/m^3
Communication System: CW; Frequency: 1880 MHz; Duty Cycle: 1:1
Probe: ER3DV6 - SN2272;ConvF(1, 1, 1)
E Scan - measurement distance from the probe sensor center to CD1880 Dipole = 15mm/Hearing Aid Compatibility Test (41x181x1): Interpolated grid: dx=0.5000 mm, dy=0.5000 mm
Device Reference Point: 0, 0, -6.3 mm
Reference Value = 154.9 V/m; Power Drift = 0.02 dB
Applied MIF = 0.00 dB
RF audio interference level = 39.45 dBV/m
Emission category: M2

MIF scaled E-field

Grid 1**M2** **39.21 dBV/m**	Grid 2**M2** **39.45 dBV/m**	Grid 3**M2** **39.36 dBV/m**
Grid 4**M2** **37.22 dBV/m**	Grid 5**M2** **37.36 dBV/m**	Grid 6**M2** **37.26 dBV/m**
Grid 7**M2** **38.78 dBV/m**	Grid 8**M2** **39.05dBV/m**	Grid 9**M2** **38.98 dBV/m**

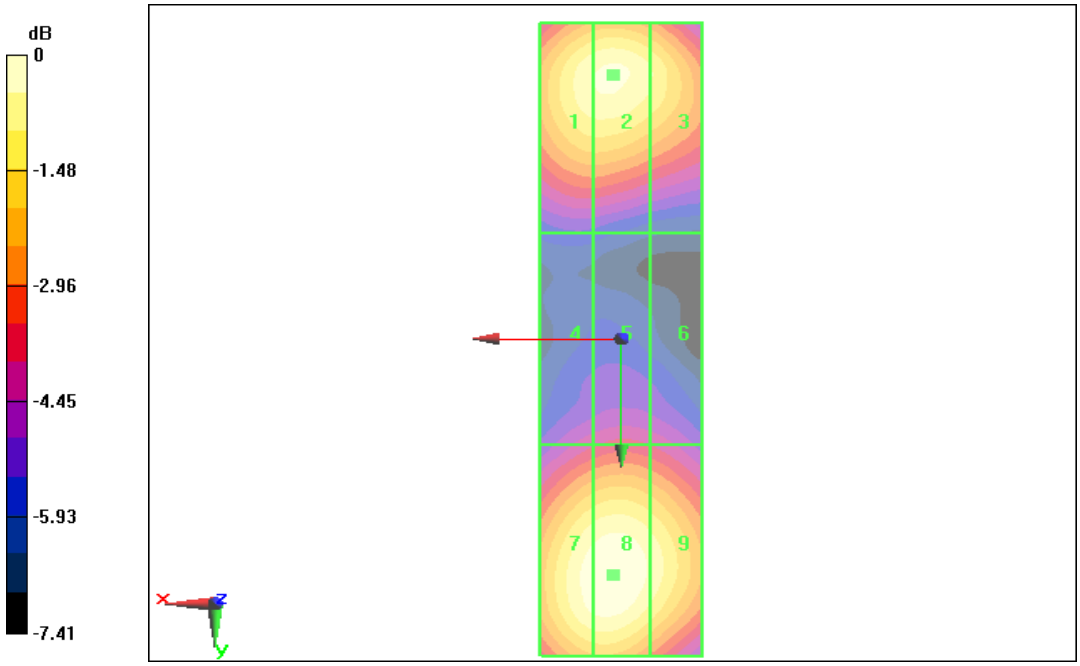

0 dB = 39.45 dBV/m

©Copyright. All rights reserved by CTTL.

ANNEX D PROBE CALIBRATION CERTIFICATE

E_Probe ER3DV6

Calibration Laboratory of
Schmid & Partner
Engineering AG
Zeughausstrasse 43, 8004 Zurich, Switzerland

S Schweizerischer Kalibrierdienst
C Service suisse d'étalonnage
Servizio svizzero di taratura
S Swiss Calibration Service

Accredited by the Swiss Accreditation Service (SAS)
The Swiss Accreditation Service is one of the signatories to the EA Multilateral Agreement for the recognition of calibration certificates

Accreditation No.: SCS 0108

Client CTTL (Auden)

Certificate No: ER3-2272_Dec17

CALIBRATION CERTIFICATE

Object	ER3DV6 - SN:2272
Calibration procedure(s)	QA CAL-02.v8, QA CAL-25.v6 Calibration procedure for E-field probes optimized for close near field evaluations in air
Calibration date:	December 19, 2017

This calibration certificate documents the traceability to national standards, which realize the physical units of measurements (SI).
The measurements and the uncertainties with confidence probability are given on the following pages and are part of the certificate.

All calibrations have been conducted in the closed laboratory facility: environment temperature (22 ± 3)°C and humidity < 70%.

Calibration Equipment used (M&TE critical for calibration)

Primary Standards	ID	Cal Date (Certificate No.)	Scheduled Calibration
Power meter NRP	SN: 104778	04-Apr-17 (No. 217-02521/02522)	Apr-18
Power sensor NRP-Z91	SN: 103244	04-Apr-17 (No. 217-02521)	Apr-18
Power sensor NRP-Z91	SN: 103245	04-Apr-17 (No. 217-02525)	Apr-18
Reference 20 dB Attenuator	SN: S5277 (20x)	07-Apr-17 (No. 217-02528)	Apr-18
Reference Probe ER3DV6	SN: 2328	10-Oct-17 (No. ER3-2328_Oct17)	Oct-18
DAE4	SN: 789	2-Aug-17 (No. DAE4-789_Aug17)	Aug-18
Secondary Standards	ID	Check Date (in house)	Scheduled Check
Power meter E4419B	SN: GB41293874	06-Apr-16 (in house check Jun-16)	In house check: Jun-18
Power sensor E4412A	SN: MY41498087	06-Apr-16 (in house check Jun-16)	In house check: Jun-18
Power sensor E4412A	SN: 000110210	06-Apr-16 (in house check Jun-16)	In house check: Jun-18
RF generator HP 8648C	SN: US3642U01700	04-Aug-99 (in house check Jun-16)	In house check: Jun-18
Network Analyzer HP 8753E	SN: US37390585	18-Oct-01 (in house check Oct-17)	In house check: Oct-18

	Name	Function	Signature
Calibrated by:	Jeton Kastrati	Laboratory Technician	
Approved by:	Katja Pokovic	Technical Manager	

Issued: December 20, 2017

This calibration certificate shall not be reproduced except in full without written approval of the laboratory.

©Copyright. All rights reserved by CTTL.

Calibration Laboratory of
Schmid & Partner
Engineering AG
Zeughausstrasse 43, 8004 Zurich, Switzerland

S Schweizerischer Kalibrierdienst
C Service suisse d'étalonnage
Servizio svizzero di taratura
S Swiss Calibration Service

Accredited by the Swiss Accreditation Service (SAS)
The Swiss Accreditation Service is one of the signatories to the EA Multilateral Agreement for the recognition of calibration certificates

Accreditation No.: SCS 0108

Glossary:

NORMx,y,z	sensitivity in free space
DCP	diode compression point
CF	crest factor (1/duty_cycle) of the RF signal
A, B, C, D	modulation dependent linearization parameters
Polarization φ	φ rotation around probe axis
Polarization ϑ	ϑ rotation around an axis that is in the plane normal to probe axis (at measurement center), i.e., ϑ = 0 is normal to probe axis
Connector Angle	information used in DASY system to align probe sensor X to the robot coordinate system

Calibration is Performed According to the Following Standards:

a) IEEE Std 1309-2005, " IEEE Standard for calibration of electromagnetic field sensors and probes, excluding antennas, from 9 kHz to 40 GHz", December 2005
b) CTIA Test Plan for Hearing Aid Compatibility, Rev 3.0, November 2013

Methods Applied and Interpretation of Parameters:

- *NORMx,y,z:* Assessed for E-field polarization ϑ = 0 for XY sensors and ϑ = 90 for Z sensor (f ≤ 900 MHz in TEM-cell; f > 1800 MHz: R22 waveguide).
- *NORM(f)x,y,z = NORMx,y,z * frequency_response* (see Frequency Response Chart).
- *DCPx,y,z:* DCP are numerical linearization parameters assessed based on the data of power sweep with CW signal (no uncertainty required). DCP does not depend on frequency nor media.
- *PAR:* PAR is the Peak to Average Ratio that is not calibrated but determined based on the signal characteristics
- *Ax,y,z; Bx,y,z; Cx,y,z; Dx,y,z; VRx,y,z: A, B, C, D* are numerical linearization parameters assessed based on the data of power sweep for specific modulation signal. The parameters do not depend on frequency nor media. *VR* is the maximum calibration range expressed in RMS voltage across the diode.
- *Spherical isotropy (3D deviation from isotropy)*: in a locally homogeneous field realized using an open waveguide setup.
- *Sensor Offset*: The sensor offset corresponds to the offset of virtual measurement center from the probe tip (on probe axis). No tolerance required.
- *Connector Angle*: The angle is assessed using the information gained by determining the *NORMx* (no uncertainty required).

©Copyright. All rights reserved by CTTL.

Probe ER3DV6

SN:2272

Manufactured: November 29, 2001
Calibrated: December 19, 2017

Calibrated for DASY/EASY Systems
(Note: non-compatible with DASY2 system!)

©Copyright. All rights reserved by CTTL.