alcatel U5

QUICK START GUIDE

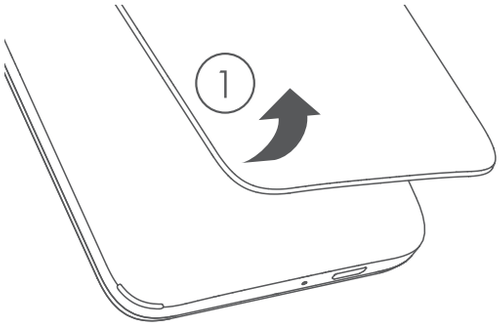

① Removing or installing the back cover.

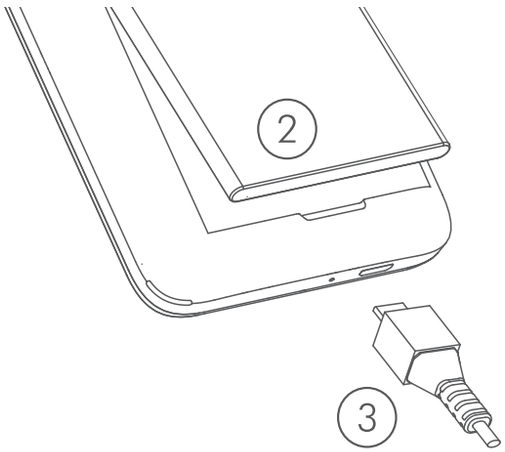

② Installing or removing the battery.

③ Charging the battery.

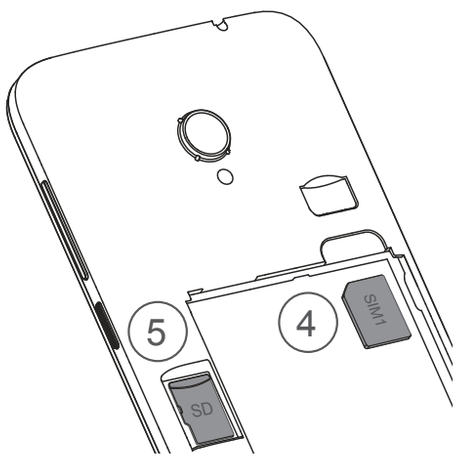

④ Inserting or removing the SIM card.

⑤ Installing or removing the microSD card.

5044A

5044O

User guide and FAQs are available online

www.alcatel-mobile.com

SAVE PAPER SAVE TREES

PLEASE CONSIDER THE ENVIRONMENT BEFORE PRINTING

English - CJB2971ALAAA

1 Home screen.....

Touching the Home key takes you to your main Home screen, You can personalize all your Home screens by adding your favorite apps, shortcuts and widgets The bottom set of icons is always visible on all of your Home screens. This also includes the Application tab, which will show all of your available apps.

Status bar
- Status/Notification indicators
- Touch and drag down to open the notification panel.

Google search bar
- Touch ❶ to enter text search screen.
- Touch ❷ to enter voice search screen.

Slide left or right to see other panels on the Home screen.

Favorite tray applications
- Touch to enter the application.
- Long press to move or remove applications.

Application tab
- Touch to open all apps

The Home screen extends to allow more space for adding applications, shortcuts, etc. Slide the Home screen horizontally left and right to get a complete view of the Home screen. The white icon in the lower part of the screen indicates which screen you are viewing.

1.1 Status bar

From the status bar, you can see both the phone status (to the right side) and notification information (to the left side).

Drag the status bar down to view notifications and drag down again to open the Quick settings panel. Touch and drag up to close it. When there are notifications, you can touch them to access notifications directly.

Notification panel

When there are notifications, touch and drag the Status bar down to open the Notification panel to read more detailed information.

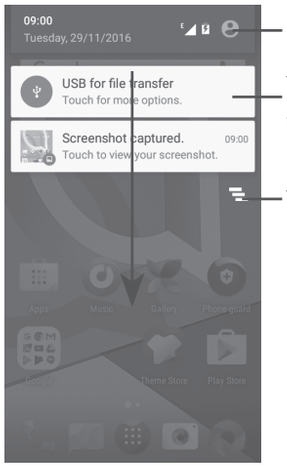

Touch to switch to the Quick settings panel.

Touch a notification and slide it sideways to delete it.

Touch to clear all event–based notifications (other ongoing notifications will remain).

Quick settings panel

Touch and drag down the Notification panel or touch to open the Quick settings panel. You can enable or disable functions or change modes by touching the icons.

Touch to enter the user screen.

Touch to open **Settings**, where you can set more items.

2 Phone call .....

2.1 Placing a call

To make a call when the phone is on, go to the Home screen and touch the Phone icon in the Favorites tray.

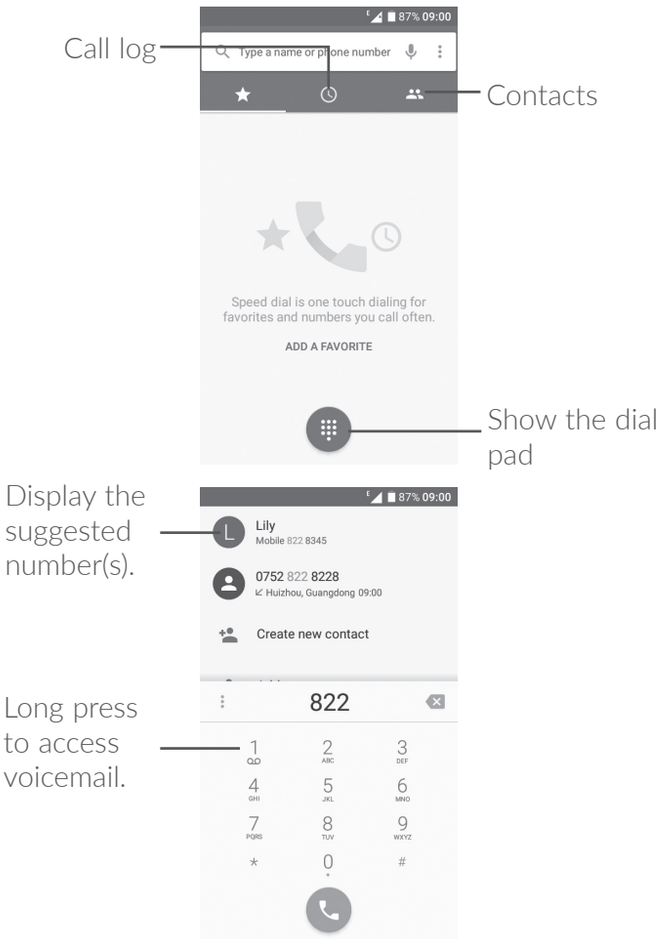

Enter the number you want from the dial pad, select a contact from Call log or Contacts by touching tabs, then touch to place the call.

The number you entered can be saved to **Contacts** by touching the **Create new contact** icon or the **Add to a contact** icon .

If you make a mistake, you can delete the incorrect digits by touching .

To hang up a call, touch .

2.2 Answering or rejecting a call

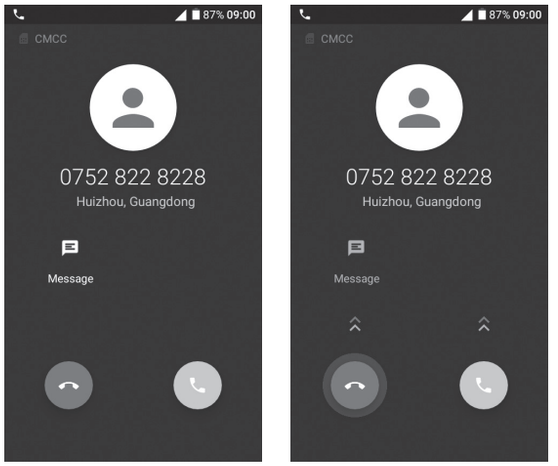

When you receive a call:

- Slide the icon up to answer;
- Slide the icon up to reject;
- Touch the icon to reject the call by sending a preset message.

To mute incoming calls, press the **Volume up/down** key, or turn the phone over when **Turn over to mute** option is activated under **Settings** > **Gestures**.

2.3 Consulting your call log

You can open your call history by touching the tab from the **Phone** screen to see Missed calls, Outgoing calls, and Incoming calls.

3 Contacts

You can see and create contacts on your phone and synchronize these with your Gmail contacts or other applications on the Web or on your phone.

3.1 Adding a contact

Touch from the applications list, then touch the icon in the contacts list to create a new contact.

3.2 Synchronizing contacts in multiple accounts

Contacts, data, or other information can be synchronized from multiple accounts, depending on the applications installed on your phone.

4 Messaging

You can create, edit, and receive SMS and MMS with this phone.

To open your Messaging, go to the Home screen and touch the Messaging icon in the Favorites tray.

To check messages stored in your SIM card, touch the icon from the Messaging screen, then touch **Settings > Text message (SMS) > Manage SIM card messages**.

4.1 Write a new message

On the message list screen, touch the new message icon to write text/multimedia messages.

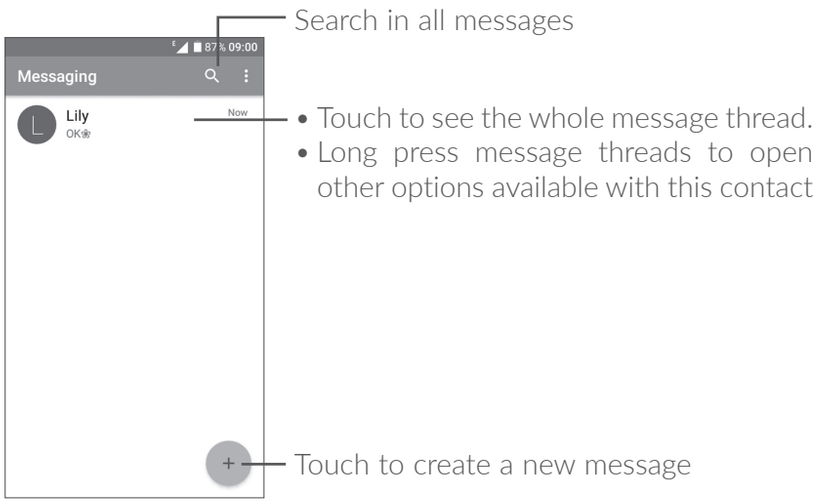

Sending a text message

Enter the name or mobile phone number of the recipient on the recipients bar or touch to add recipients, then touch the content bar to enter the text of the message. When finished, touch to send the text message.

An SMS of more than 160 characters will be charged as several SMS. Specific letters (accent) will also increase the size of the SMS. This may cause multiple SMS to be sent to your recipient.

Sending a multimedia message

MMS enables you to send video clips, images, photos, contacts, slides, and sounds to other compatible phones and email addresses.

An SMS will be converted to MMS automatically when media files (image, video, audio, slides, etc.) are attached or Subject or email addresses are added.

5 Email

To open Email, touch the Application tab from the Home screen, then select **Email**.

An email setup wizard will guide you through the steps to set up an email account.

- Enter the email address of the account you want to set up.
- Touch **NEXT**. If the account you entered is not provided by your service provider in the phone, you will be prompted to go to the email account settings screen to enter settings manually. You can also touch **MANUAL SETUP** to directly enter the incoming and outgoing settings for the email account you are setting up.
- Enter your password.
- Finish by setting up your account settings for synchronizing frequency, notification, etc.
- Edit your account name if necessary.

To add another email account, you can touch the icon and then **Settings**. Touch **Add account** to create.

To create and send emails

- Touch the icon from the inbox screen.
- Enter recipient(s) email address (es) in the **To** field.
- If necessary, touch the **Add Cc/Bcc** menu icon to add a copy or a blind copy to the message.
- Enter the subject and the content of the message.
- Touch to add an attachment.
- Finally, touch to send.
- If you do not want to send the mail out right away, you can touch the icon and select **Save draft** or touch the **Back** key to save a copy. To view the draft, touch to display all labels, then select **Drafts**.
- If you do not want to send or save the mail, you can touch the icon and then touch **Discard**.

To add a signature to emails, touch the icon from the inbox screen and then touch **Settings**, choose an account, then touch **Signature**.

6 Getting connected

Your phone can connect to the Internet using either GPRS/EDGE/3G/4G or Wi-Fi.

6.1 Connecting to the Internet

6.1.1 GPRS/EDGE/3G/4G

The first time you turn on your phone with your SIM card inserted, it will automatically configure your network service: GPRS, EDGE, 3G, 4G. If the network is not connected, you can turn on mobile data in **Settings** > **Data usage**.

To check which network connection you are using, touch the Application tab on the Home screen, then go to **Settings** > **More** > **Mobile networks** > **Access point names** or **Network operators**.

6.1.2 Wi-Fi

You can connect to the Internet when your phone is within the range of a wireless network. Wi-Fi can be used on your phone even without a SIM card inserted.

To turn Wi-Fi on and connect to a wireless network

- Go to **Settings** > **Wi-Fi**.
- Touch the switch to turn Wi-Fi on/off.
- Turn on Wi-Fi: detailed information of all detected Wi-Fi networks is displayed in the Wi-Fi networks section.
- Touch a Wi-Fi network to connect. If the network you selected is secured, you will need to enter a password or other credentials (contact network operator for details). When finished, touch **CONNECT**.

Safety and warranty information

www.sar-tick.com

alcatel

This product meets applicable national SAR limits of 1.6 W/kg. The specific maximum SAR values can be found in the RADIOWAVES section of this user guide.

When carrying the product or using it while worn on your body, either use an approved accessory such as a holster or otherwise maintain a distance of 10 mm from the body to ensure compliance with RF exposure requirements. Note that the product may be transmitting even if you are not making a phone call.

PROTECT YOUR HEARING

To prevent possible hearing damage, do not listen at high volume levels for long periods. Exercise caution when holding your device near your ear while the loudspeaker is in use.

Safety and use .....

We recommend that you read this chapter carefully before using your mobile phone. The manufacturer disclaims any liability for damage, which may result as a consequence of improper use or use contrary to the instructions contained herein.

• TRAFFIC SAFETY:

Given that studies show that using a mobile phone while driving a vehicle constitutes a real risk, even when the hands-free kit is used (car kit, headset...), drivers are requested to refrain from using their mobile phone when the vehicle is not parked. Check the laws and regulations on the use of wireless mobile phones and their accessories in the areas where you drive. Always obey them. The use of these devices may be prohibited or restricted in certain areas.

When driving, do not use your mobile phone and headset to listen to music or to the radio. Using a headset can be dangerous and forbidden in some areas.

When switched on, your mobile phone emits electromagnetic waves that can interfere with the vehicle's electronic systems such as ABS anti-lock brakes or airbags. To ensure that there is no problem:

- do not place your mobile phone on top of the dashboard or within an airbag deployment area,
- check with your car dealer or the car manufacturer to make sure that the car's electronic devices are shielded from mobile phone RF energy.

• CONDITIONS OF USE:

You are advised to switch off the mobile phone from time to time to optimize its performance.

Remember to abide by local authority rules of mobile phone use on aircrafts.

Operational Warnings: Obey all posted signs when using mobile devices in public areas.

Follow Instructions to Avoid Interference Problems: Turn off your mobile device in any location where posted notices instruct you to do so. In an aircraft, turn off your mobile device whenever instructed to do so by airline staff. If your mobile device offers an airplane mode or similar feature, consult airline staff about using it in flight.

Switch the mobile phone off when you are in health care facilities, except in designated areas. As with many other types of equipment now in regular use, mobile phones can interfere with other electrical or electronic devices, or equipment using radio frequency.

Switch the mobile phone off when you are near gas or flammable liquids. Strictly obey all signs and instructions posted in a fuel depot, gas station, or chemical plant, or in any potentially explosive atmosphere.

When the mobile phone is switched on, it should be kept at least 15 cm from any medical device such as a pacemaker, a hearing aid or insulin pump. In particular, when using the mobile phone you should hold it against the ear on the opposite side to the device, if any.

Read and follow the directions from the manufacturer of your implantable medical device. If you have any questions about using your mobile device with your implantable medical device, consult your healthcare provider.

To avoid hearing impairment, answer the call before holding your mobile phone to your ear. Also, move the handset away from your ear while using the “hands-free” option because the amplified volume might cause hearing damage.

It is recommended to have proper supervision while small children use your mobile phone.

When replacing the cover please note that your phone may contain substances that could create an allergic reaction.

Always handle your mobile phone with care and keep it in a clean and dust-free place.

Do not allow your mobile phone to be exposed to adverse weather or environmental conditions (moisture, humidity, rain, infiltration of liquids, dust, sea air, etc.). The manufacturer’s recommended operating temperature range is -10°C (14°F) to +55°C (131°F) (the max value depends on the device materials and housing paint/texture).

Over 55°C (131°F) the legibility of the mobile phone’s display may be impaired, though this is temporary and not serious.

Do not open or attempt to repair your mobile phone yourself.

Do not drop, throw, or try to bend your mobile phone.

Do not use the mobile phone if the glass made screen is damaged, cracked, or broken to avoid any injury.

Do not paint it.

Use only batteries, battery chargers, and accessories which are recommended by TCL Communication Ltd. and its affiliates and are compatible with your mobile phone model. TCL Communication Ltd. and its affiliates disclaim any liability for damage caused by the use of other chargers or batteries.

Your mobile phone should not be disposed of in a municipal waste. Please check local regulations for disposal of electronic products.

Remember to make back-up copies or keep a written record of all important information stored on your mobile phone.

Some people may suffer epileptic seizures or blackouts when exposed to flashing lights, or when playing video games. These seizures or blackouts may occur even if a person never had a previous seizure or blackout. If you have experienced seizures or blackouts, or if you have a family history of such occurrences, please consult your doctor before playing video games on your mobile phone or enabling a flashing-lights feature on your mobile phone. Parents should monitor their children’s use of video games or other features that incorporate flashing lights on the mobile phones. All persons should discontinue use and consult a doctor if any of the following symptoms occur: convulsion, eye or muscle twitching, loss of awareness, involuntary movements, or disorientation. To limit the likelihood of such symptoms, please take the following safety precautions:

- Play at the farthest distance possible from the screen. When you play games on your mobile phone, you may experience occasional discomfort in your hands, arms, shoulders, neck, or other parts of your body. Follow these instructions to avoid problems such as tendinitis, carpal tunnel syndrome, or other musculoskeletal disorders:
- Take a minimum of a 15-minute break every hour of game playing.
- If your hands, wrists, or arms become tired or sore while playing, stop and rest for several hours before playing again.
- If you continue to have sore hands, wrists, or arms during or after playing, stop the game and see a doctor.

PROTECT YOUR HEARING

To prevent possible hearing damage, do not listen at high volume levels for long periods. Exercise caution when holding your device near your ear while the loudspeaker is in use.

• PRIVACY:

Please note that you must respect the laws and regulations in force in your jurisdiction or other jurisdiction(s) where you will use your mobile phone regarding taking photographs and recording sounds with your mobile phone. Pursuant to such laws and regulations, it may be strictly forbidden to take photographs and/or to record the voices of other people or any of their personal attributes, and reproduce or distribute them, as this may be considered to be an invasion of privacy.

It is the user's sole responsibility to ensure that prior authorization is obtained, if necessary, in order to record private or confidential conversations or take a photograph of another person; the manufacturer, the seller or vendor of your mobile phone (including the operator) disclaim any liability which may result from the improper use of the mobile phone.

• BATTERY AND ACCESSORIES:

Following new air regulation, the battery of your product is not charged. Please charge it first.

For non-unibody device:

Before removing the battery from your mobile phone, please make sure that the mobile phone is switched off.

Observe the following precautions for battery use:

- Do not attempt to open the battery (due to the risk of toxic fumes and burns).
- Do not puncture, disassemble, or cause a short-circuit in the battery,
- Do not burn or dispose of a used battery in the garbage or store it at temperatures above 60°C (140°F).

Batteries must be disposed of in accordance with locally applicable environmental regulations. Only use the battery for the purpose for which it was designed. Never use damaged batteries or those not recommended by TCL Communication Ltd. and/or its affiliates.

For unibody device:

Please note your phone is a unibody device, the back cover and battery are not removable. Observe the following precautions:

- Do not attempt to open the back cover,
- Do not attempt to eject, replace, or open battery,
- Do not puncture the back cover of your phone,
- Do not burn or dispose of your phone in household garbage or store it at temperature above 60°C.

Phone and battery as a unibody device must be disposed of in accordance with locally applicable environmental regulations.

This symbol on your mobile phone, the battery, and the accessories means that these products must be taken to collection points at the end of their life:

- Municipal waste disposal centers with specific bins for these types of equipment
- Collection bins at points of sale.

They will then be recycled, preventing substances being disposed in the environment, so that their components can be reused.

In European Union countries:

These collection points are accessible free of charge. All products with this sign must be brought to these collection points.

In non-European Union jurisdictions:

Items of equipment with this symbol are not be thrown into ordinary bins if your jurisdiction or your region has suitable recycling and collection facilities; instead, they are to be taken to collection points for them to be recycled.

In the United States, you may learn more about CTIA's Recycling Program at http://www.gowirelessgogreen.org/

CAUTION: RISK OF EXPLOSION IF BATTERY IS REPLACED BY AN INCORRECT TYPE. DISPOSE OF USED BATTERIES ACCORDING TO THE INSTRUCTIONS

• CHARGERS:

Home A.C./ Travel chargers will operate within the temperature range of: 0°C (32°F) to 40°C (104°F).

The chargers designed for your mobile phone meet with the standard for safety of information technology equipment and office equipment use. Due to different applicable electrical specifications, a charger you purchased in one jurisdiction may not work in another jurisdiction. They should be used for this purpose only.

Characteristics of power supply (depending on the country):

Travel charger: Input:100-240VAC, 50/60Hz, 130mA/150mA
Output: 5V, 550mA

Battery: Lithium 2000mAh

Radio Waves .....

THIS MOBILE PHONE MEETS THE GOVERNMENT'S REQUIREMENTS FOR EXPOSURE TO RADIO WAVES.

Your mobile phone is a radio transmitter and receiver. It is designed and manufactured not to exceed the emission limits for exposure to radio-frequency (RF) energy. These limits are part of comprehensive guidelines and establish permitted levels of RF energy for the general population. The guidelines are based on standards that were developed by independent scientific organizations through periodic and thorough evaluation of scientific studies. These guidelines include a substantial safety margin designed to ensure the safety of all persons, regardless of age and health.

The exposure standard for mobile phones employs a unit of measurement known as the Specific Absorption Rate, or SAR. The SAR limit set by public authorities such as the Federal Communications Commission of the US Government (FCC), or by Industry Canada, is 1.6 W/kg averaged over 1 gram of body tissue. Tests for SAR are conducted using standard operating positions with the mobile phone transmitting at its highest certified power level in all tested frequency bands.

Although the SAR is determined at the highest certified power level, the actual SAR level of the mobile phone while operating can be well below the maximum value. This is because the mobile phone is designed to operate at multiple power levels so as to use only the power required to reach the network. In general, the closer you are to a wireless base station antenna, the lower the power output of the mobile phone. Before a mobile phone model is available for sale to the public, compliance with national regulations and standards must be shown.

The highest SAR value for this model mobile phone when tested is 0.76 W/kg for use at the ear and 1.08 W/kg for use close to the body.

While there may be differences between the SAR levels of various mobile phones and at various positions, they all meet the government requirement for RF exposure. For body-worn operation, the mobile phone meets FCC RF exposure guidelines provided that it is used with a non-metallic accessory with the handset at least 10 mm from the body. Use of other accessories may not ensure compliance with FCC RF exposure guidelines.

Additional information on SAR can be found on the Cellular Telecommunications & Internet Association (CTIA) Web site: http://www.ctia.org/

The World Health Organization (WHO) considers that present scientific information does not indicate the need for any special precautions for use of mobile phones. If individuals are concerned, they might choose to limit their own or their children's RF exposure by limiting the length of calls, or using "hands-free" devices to keep mobile phones away from the head and body. (fact sheet n°193). Additional WHO information about electromagnetic fields and public health are available on the following website: http://www.who.int/peh-emf.

Note: This equipment has been tested and found to comply with the limits for a Class B digital device pursuant to part 15 of the FCC Rules. These limits are designed to provide reasonable protection against harmful interference in a residential installation. This equipment generates, uses and can radiate radio frequency energy and, if not installed and used in accordance with the instructions, may cause harmful interference to radio communications. However, there is no guarantee that interference to radio or television reception, which can be determined by turning the equipment off and on, the user is encouraged to try to correct the interference by one or more of the following measures:

- Reorient or relocate the receiving antenna.
- Increase the separation between the equipment and receiver.
- Connect the equipment into an outlet on a circuit different from that to which the receiver is connected.
- Consult the dealer or an experienced radio/ TV technician for help.

Changes or modifications not expressly approved by the party responsible for compliance could void the user's authority to operate the equipment.

For the receiver devices associated with the operation of a licensed radio service (e.g. FM broadcast), they bear the following statement:

This device complies with Part 15 of the FCC Rules. The operation is subject to the condition that this device does not cause harmful interference.

For other devices, they bear the following statement:

This device complies with Part 15 of the FCC Rules. Operation is subject to the following two conditions:

(1) this device may not cause harmful interference

(2) this device must accept any interference received, including interference that may cause undesired operation.

Your mobile phone is equipped with a built-in antenna. For optimal operation, you should avoid touching it or degrading it.

As mobile devices offer a range of functions, they can be used in positions other than against your ear. In such circumstances, the device will be compliant with the guidelines when used with headset or USB data cable. If you are using another accessory ensure that whatever product is used is free of any metal and that it positions the mobile phone at least 10 mm away from the body.

Please note by using the device some of your personal data may be shared with the main device. It is under your own responsibility to protect your own personal data, not to share it with any unauthorized devices or third party devices connected to yours. For products with Wi-Fi features, only connect to trusted Wi-Fi networks. Also, when using your product as a hotspot (where available), use network security. These precautions will help prevent unauthorized access to your device. Your product can store personal information in various locations including a SIM card, memory card, and built-in memory. Be sure to remove or clear all personal information before you recycle, return, or give away your product. Choose your apps and updates carefully, and install from trusted sources only. Some apps can impact your product's performance and/or have access to private information including account details, call data, location details and network resources.

Note that any data shared with TCL Communication Ltd. is stored in accordance with applicable data protection legislation. For these purposes, TCL Communication Ltd. implements and maintains appropriate technical and organizational measures to protect all personal data, for example against unauthorized or unlawful processing and accidental loss or destruction of or damage to such personal data whereby the measures shall provide a level of security that is appropriate having regard to

(i) the technical possibilities available,

(ii) the costs for implementing the measures,

(iii) the risks involved with the processing of the personal data, and

(iv) the sensitivity of the personal data processed.

You can access, review and edit your personal information at any time by logging into your user account, visiting your user profile or by contacting us directly. Should you require us to edit or delete your personal data, we may ask you to provide us with evidence of your identity before we can act on your request.

Licenses.....

	microSD Logo is a trademark.
	The Bluetooth word mark and logos are owned by the Bluetooth SIG, Inc. and any use of such marks by TCL Communication Ltd. and its affiliates is under license. Other trademarks and trade names are those of their respective owners.
	Alcatel U5 Bluetooth Declaration ID D032716
	The Wi-Fi Logo is a certification mark of the Wi-Fi Alliance. Google, the Google logo, Android, the Android logo, Google Search™, Google Maps™, Gmail™, YouTube, Google Play Store, Google Latitude™ and Hangouts™ are trademarks of Google Inc.

The Android robot is reproduced or modified from work created and shared by Google and used according to terms described in the Creative Commons 3.0 Attribution License (the text will show when you touch and hold **Google legal** in **Settings\About phone\Legal information)**. [1]

You have purchased a product which uses the open source (http://opensource.org/) programs mtd, msdosfs, netfilter/iptables and initrd in object code and other open source programs licensed under the GNU General Public License and Apache License.

We will provide you with a complete copy of the corresponding source codes upon request within a period of three years from the distribution of the product by TCL Communication.

You may download the source codes from http://sourceforge.net/projects/alcatel/files/. The provision of the source code is free of charge from the internet.

Hearing Aid Compatibility

Your mobile phone is rated: «For Hearing Aid», to assist hearing device users in finding mobile phones that may be compatible with their hearing devices.

This device is HAC M3 compatible. Reference ANSI C63.19-2011 For more information please visit our website http://www.alcatelonetouch.us

FCC ID: 2ACCJH062(5044A)
2ACCJH063(5044O)

[1] May not be available in all countries.

General information .....

- **Website:** www.alcatelonetouch.us
- **Facebook:** http://www.facebook.com/alcatelonetouchusa / www.facebook.com/alcatelonetouchcanada
- **Twitter:** http://www.twitter.com/alcatelonetouch
- **Hot Line Number:** In the United States, call 855-368-0829 for technical support. In Canada, call 855-844-6058 for technical support.
- **Electronic labeling path:** Touch Settings\Regulatory & Safety or press *#07#, you can find more information about labeling [1].

On our Website you will find our FAQ (Frequently Asked Questions) section. You can also contact us by e-mail to ask any questions you may have.

An electronic version of this user guide is available in English and other languages according to availability on our server: **www.alcatelonetouch.us**

5044A

Your telephone is a transceiver that operates on GSM in quad-band (850/900/1800/1900 MHz), UMTS in quad-band (B1/2/5/8 MHz), or FDD LTE in (B2/3/4/5/7/12/13/17/20).

5044O

Your telephone is a transceiver that operates on GSM in quad-band (850/900/1800/1900 MHz), UMTS in penta-band (B1/2/4/5/8 MHz), or FDD LTE in (B1/2/3/4/7/12/13/17/28).

Protection against theft [2]

Your mobile phone is identified by an IMEI (mobile phone serial number) shown on the packaging label and in the product's memory. We recommend that you note the number the first time you use your mobile phone by entering *#06# and keep it in a safe place. It may be requested by the police or your operator if your mobile phone is stolen.

Disclaimer

There may be certain differences between the user manual description and the mobile phone's operation, depending on the software release of your mobile phone or specific operator services.

TCL Communication Ltd. shall not be held legally responsible for such differences, if any, nor for their potential consequences, which responsibility shall be borne by the operator exclusively.

[1] May not be available in all countries.
[2] Contact your network operator to check service availability.

TCL Communication Ltd. Warranty .....

TCL Communication Ltd. warrants to the original retail purchaser of this wireless device that should this product or part thereof during normal consumer usage and condition be proven to be defective in material or workmanship that results in product failure within the first twelve (12) months from the date of purchase as shown on your original sales receipt from an authorized sales agent. Such defect(s) will be repaired or replaced (with new or rebuilt parts) at the company's option without charge for parts or labor directly related to the defect(s).

Batteries, power adapters, and other accessories sold as in box items are also warranted against defects and workmanship that results in product failure within the first six (6) months period from the date of purchase as shown on your original sales receipt. Such defect(s) will be repaired or replaced (with new or rebuilt parts) at the company's option without charge for parts or labor directly related to the defect(s).

The limited warranty for your wireless device will be voided if any of the following conditions occur:

- Non-compliance with the instructions for use or installation, or with technical and safety standards applicable in the geographical area where your phone is used;
- Connection to any equipment not supplied or not recommended by TCL Communication Ltd.;
- Modification or repair performed by individuals not authorized by TCL Communication Ltd. or its affiliates;
- Changes to the device operating system by the user or third party applications;
- Acts of god such as inclement weather, lightning, power surges, fire, humidity, infiltration of liquids or foods, chemical products, download of files, crash, high voltage, corrosion, oxidation;
- Removal or altering of the wireless device's event labels or serial numbers (IMEI);
- Damage from exposure to water or other liquids, moisture, humidity, excessive temperatures or extreme environmental conditions, sand, excess dust and any condition outside the operating guidelines;
- Defects in appearance, cosmetic, decorative or structural items such as framing and non-operative parts;
- Damage as a result of physical abuse regardless of cause.

There are no express warranties, whether written, oral or implied, other than this printed limited warranty or the mandatory warranty provided by your jurisdiction. In no event shall TCL Communication Ltd. or any of its affiliates be liable for incidental or consequential damages of any nature whatsoever, including but not limited to commercial loss, to the full extent those damages can be disclaimed by law. Some states do not allow the exclusion or limitation of incidental or consequential damages or limitation on the duration of implied warranties, so the preceding limitations or exclusions may not apply to you.

How to obtain Support: In United States please call, (855) 368-0829 or go to www.alcatelonetouch.us for technical support. In Canada please call, (855) 844-6058 or go to www.alcatelonetouch.ca for technical support. We have placed many self-help tools that may help you to isolate the problem and eliminate the need to send your wireless device in for service. In the case that your wireless device is no longer covered by this limited warranty due to time or condition, you may utilize our out of warranty repair options.

How to obtain Hardware Service within the terms of this warranty: Create a user profile (alcatel.finetw.com) and then create an RMA for the defective device. Ship the device with a copy of the original proof of purchase (e.g. original copy of the dated bill of sale, invoice) with the owner's return address (No PO Boxes accepted), wireless carrier's name, alternate daytime phone number, and email address with a complete problem description. Only ship the device. Do not ship the SIM card, memory cards, or any other accessories such as the power adapter. You must properly package and ship the wireless device to the repair center. TCL Communication Ltd. is not responsible for devices that do not arrive at the service center or are damaged in transit. Insurance is recommended with proof of delivery. Upon receipt, the service center will verify the warranty conditions, repair, and return your device to the address provided in the RMA. Check the warranty repair status by going online with the RMA number on the web portal.

Troubleshooting .....

Before contacting the service center you are advised to follow the instructions below:

- You are advised to fully charge the battery for optimal operation.
- Avoid storing large amounts of data on your phone as this may affect its performance.
- Use the FOTA (Firmware Over The Air) Upgrade tool to update your phone's software. To access **System updates**, touch the Application tab from the Home screen, then select **System updates** or touch **Settings\About phone\System updates**.

  Touch and the phone will search for the latest software. If you want to update the system, touch the button, and when that's finished, touch to complete the upgrade. Now your phone will have the latest version of the software. You should turn on data connection or Wi-Fi before searching for updates. Auto-check settings are also available. If you have chosen auto-check when the system discovers the new version, a dialog will pop up to choose download or ignore, the notification will also appear in the status bar.

  Don't change your default storage location while FOTA is downloading or updating to avoid errors in locating the correct update packages.
- Use **Factory data reset** and Mobile Upgrade tool to perform phone formatting or software upgrading (to reset factory data, hold down the **Power** key and the **Volume up** key at the same time when powered off). ALL User phone data: contacts, photos, messages and files, downloaded applications will be lost permanently. It is strongly advised to fully backup the phone data and profile via Smart Suite before doing formatting and upgrading.
- Please pay attention that after Factory data reset is performed you may be requested to enter Google account credentials* that were used on this device before Factory reset. Otherwise, you will not be able to use the device. If you don't remember your Google account credentials please complete Google account recovery procedure. In case you don't succeed in it - please apply to authorized repair center, but remember that it will not be regarded as warranty case.

* Applicable for Android OS versions starting from 5.1.

and carry out the following checks:

My phone cannot be switched on or is frozen

- If the phone cannot be switched on, charge it for at least 20 minutes to ensure the minimum battery power needed, then try to switch on again.
- If the phone falls into a loop during power on-off animation and the user interface cannot be accessed, press and hold the **Power** key to reset. This eliminates any abnormal OS booting issues caused by 3rd party APKs.
- If neither method is effective, please reset the phone using the **Power** key and the **Volume up** key (holding both together) or upgrade software via Mobile Upgrade tool.

My phone has not responded for several minutes

- Restart your phone by pressing and holding the **Power** key.
- Remove the battery and re-insert it, then restart the phone.
- If it still does not work, please use Factory data reset to reset the phone or Mobile Upgrade to upgrade software.

My phone turns off by itself

- Check that your screen is locked when you are not using your phone, and make sure the **Power** key is not accidentally contacted while the screen is unlocked.
- Check the battery charge level.
- If it still does not work, please use Factory data reset to reset the phone or FOTA/Mobile Upgrade to upgrade software.

My phone cannot charge properly

- Make sure you are using an ALCATEL battery and the charger from the box.
- Make sure your battery is inserted properly and clean the battery contact if it's dirty. It must be inserted before plugging in the charger.
- Make sure that your battery is not completely discharged; if the battery power is empty for a long time, it may take around 20 minutes to display the battery charger indicator on the screen.
- Make sure charging is carried out under normal conditions (0°C to +40°C).
- When abroad, check that the voltage input is compatible.

My phone cannot connect to a network or "No service" is displayed

- Try connecting in another location.
- Verify the network coverage with your operator.
- Check with your operator that your SIM card is valid.

- Try connecting at a later time if the network is overloaded.

My phone cannot connect to the Internet

- Check that the IMEI number (press *#06#) is the same as the one printed on your warranty card or box.
- Make sure that the internet access service of your SIM card is available.
- Check your phone's Internet connection settings.
- Make sure you are in a place with network coverage.
- Try connecting at a later time or another location.

Invalid SIM card

- Make sure the SIM card has been correctly inserted (see "Inserting or removing the SIM card").
- Make sure the chip on your SIM card is not damaged or scratched.
- Make sure the service of your SIM card is available.

Unable to make outgoing calls

- Make sure you have dialed a valid number and have touched **Call**.
- For international calls, check the country and area codes.
- Make sure your phone is connected to a network, and the network is not overloaded or unavailable.
- Check your subscription status with your operator (credit, SIM card valid, etc.).
- Make sure you have not barred outgoing calls.
- Make sure that your phone is not in airplane mode.

Unable to receive incoming calls

- Make sure your phone is switched on and connected to a network (check for overloaded or unavailable network).
- Check your subscription status with your operator (credit, SIM card valid, etc.).
- Make sure you have not forwarded incoming calls.
- Make sure that you have not barred certain calls.
- Make sure that your phone is not in airplane mode.

The caller's name/number does not appear when a call is received

- Check that you have subscribed to this service with your operator.
- Your caller has concealed his/her name or number.

I cannot find my contacts

- Make sure your SIM card is not broken.
- Make sure your SIM card is inserted properly.
- Import all contacts stored in SIM card to phone.

The sound quality of the calls is poor

- You can adjust the volume during a call by pressing the **Volume Up/Down** key.
- Check the network strength.

I am unable to use the features described in the manual

- Check with your operator to make sure that your subscription includes this service.
- Make sure this feature does not require an ALCATEL accessory.

When I select a number from my contacts, the number cannot be dialed

- Make sure that you have correctly recorded the number in your file.
- Make sure that you have selected the country prefix when calling a foreign country.

I am unable to add a contact in my contacts

- Make sure that your SIM card contacts are not full; delete some files or save the files in the phone contacts (i.e. your professional or personal directories).

My callers are unable to leave messages on my voicemail

- Contact your network operator to check service availability.

I cannot access my voicemail

- Make sure your operator's voicemail number is correctly entered in "Voicemail number".
- Try later if the network is busy.

I am unable to send and receive MMS

- Check your phone memory availability as it might be full.
- Contact your network operator to check service availability and check MMS parameters.
- Verify the server center number or your MMS profile with your operator.
- The server center may be busy, try again later.

SIM card PIN locked

- Contact your network operator to obtain the PUK code (Personal Unblocking Key).

I am unable to connect my phone to my computer

- Install Smart Suite.
- Check that your USB driver is installed properly.
- Open the Notification panel to check if the Smart Suite Agent has been activated.
- Check that your computer meets the requirements for Smart Suite Installation.
- Make sure that you're using the right cable from the box.

I am unable to download new files

- Make sure there is sufficient phone memory for your download.
- Select the microSD card as the location to store downloaded files.
- Check your subscription status with your operator.

The phone cannot be detected by others via Bluetooth

- Make sure that Bluetooth is turned on and your phone is visible to other users.
- Make sure that the two phones are within Bluetooth's detection range.

How to make your battery last longer

- Make sure you follow the complete charge time (minimum 2.5 hours).
- After a partial charge, the battery level indicator may not be exact. Wait for at least 20 minutes after removing the charger to obtain an exact indication.
- Adjust the brightness of the screen as appropriate
- Extend the email auto-check interval for as long as possible.
- Update news and weather information on manual demand, or increase their auto-check interval.
- Exit background-running applications if they are not being used for a long time.
- Deactivate Bluetooth, Wi-Fi, or GPS when not in use.

The phone becomes warm following prolonged calls, game playing, internet surfing, or running other complex applications.

- This heating is a normal consequence of the CPU handling excessive data. Ending above actions will make your phone return to normal temperatures.

After Factory reset is performed my device asks to enter Google account credentials and I can't use it avoiding this action*.

- After Factory reset is performed you need to enter the original Google account credentials that were used on this device before Factory data reset. Otherwise, you will not be able to use the device. If you don't remember your Google account credentials please complete Google account recovery procedure. In case you don't succeed in it - please apply to authorized repair center, but remember that it will not be regarded as warranty case.

* Applicable for Android OS versions starting from 5.1.

I don't hear when somebody calls/messages me, I just see missed calls/messages notifications on display.

- Please check if Interruptions/Do not disturb mode is activated on your device. If it is activated you can see a "Star" ★ symbol (for Android OS 5.X version) or icon (for Android OS 6.X version) displayed on the notification panel. In this case, you need deactivate Interruptions/Do not disturb mode. To do it just press volume up or down key and select "All" (on Android 5.X) or modify it in Settings → Sound & notifications → Interruptions (for Android 5.X) or Do not disturb (for Android 6.X).

My device asks me to enter some password/code/key that I don't remember or don't know due to this device has been used by another person before and I can't get this password/code/key from him/her.

- Password/code/key request could be caused by same security feature activated on this device. You can try to perform Factory data reset, but remember that if it doesn't help you need to contact an authorized repair center and it will not be regarded as warranty case.

alcatel is a trademark of Alcatel-Lucent
and is used under license by
TCL Communication Ltd.

© Copyright 2016 TCL Communication Ltd
All rights reserved

TCL Communication Ltd reserves
the right to alter material
or technical specification
without prior notice.

All "Signature" ringtones embedded in this phone have been composed, arranged, and mixed by NU TROPIC (Amar Kabouche).