In Collaboration with
s p e a g
CALIBRATION LABORATORY

Add: No.51 Xueyuan Road, Haidian District, Beijing, 100191, China
Tel: +86-10-62304633-2512 Fax: +86-10-62304633-2504
E-mail: cttl@chinattl.com Http://www.chinattl.cn

中国认可
国际互认
校准
CALIBRATION
CNAS L0570

Client : SGS

Certificate No: Z19-60018

# CALIBRATION CERTIFICATE

| | |
|---|---|
| Object | DAE4 - SN: 1428 |
| Calibration Procedure(s) | FF-Z11-002-01<br>Calibration Procedure for the Data Acquisition Electronics (DAEx) |
| Calibration date: | January 11, 2019 |

This calibration Certificate documents the traceability to national standards, which realize the physical units of measurements(SI). The measurements and the uncertainties with confidence probability are given on the following pages and are part of the certificate.

All calibrations have been conducted in the closed laboratory facility: environment temperature(22±3)°C and humidity<70%.

Calibration Equipment used (M&TE critical for calibration)

| Primary Standards | ID # | Cal Date(Calibrated by, Certificate No.) | Scheduled Calibration |
|---|---|---|---|
| Process Calibrator 753 | 1971018 | 20-Jun-18 (CTTL, No.J18X05034) | June-19 |

| | Name | Function | Signature |
|---|---|---|---|
| Calibrated by: | Yu Zongying | SAR Test Engineer | |
| Reviewed by: | Lin Hao | SAR Test Engineer | |
| Approved by: | Qi Dianyuan | SAR Project Leader | |

Issued: January 14, 2019

This calibration certificate shall not be reproduced except in full without written approval of the laboratory.

Add: No.51 Xueyuan Road, Haidian District, Beijing, 100191, China
Tel: +86-10-62304633-2512 Fax: +86-10-62304633-2504
E-mail: cttl@chinattl.com Http://www.chinattl.cn

**Glossary:**

| | |
|---|---|
| DAE | data acquisition electronics |
| Connector angle | information used in DASY system to align probe sensor X to the robot coordinate system. |

**Methods Applied and Interpretation of Parameters:**

- *DC Voltage Measurement*: Calibration Factor assessed for use in DASY system by comparison with a calibrated instrument traceable to national standards. The figure given corresponds to the full scale range of the voltmeter in the respective range.

- *Connector angle*: The angle of the connector is assessed measuring the angle mechanically by a tool inserted. Uncertainty is not required.

- The report provide only calibration results for DAE, it does not contain other performance test results.

Add: No.51 Xueyuan Road, Haidian District, Beijing, 100191, China
Tel: +86-10-62304633-2512 Fax: +86-10-62304633-2504
E-mail: cttl@chinattl.com Http://www.chinattl.cn

## DC Voltage Measurement

A/D - Converter Resolution nominal

High Range: 1LSB = 6.1μV , full range = -100...+300 mV

Low Range: 1LSB = 61nV , full range = -1.....+3mV

DASY measurement parameters: Auto Zero Time: 3 sec; Measuring time: 3 sec

| Calibration Factors | X | Y | Z |
|---|---|---|---|
| **High Range** | 405.182 ± 0.15% (k=2) | 404.992 ± 0.15% (k=2) | 405.004 ± 0.15% (k=2) |
| **Low Range** | 3.98949 ± 0.7% (k=2) | 3.97194 ± 0.7% (k=2) | 4.01151 ± 0.7% (k=2) |

## Connector Angle

| | |
|---|---|
| **Connector Angle** to be used in DASY system | 163° ± 1 ° |

In Collaboration with
s p e a g
CALIBRATION LABORATORY

Add: No.51 Xueyuan Road, Haidian District, Beijing, 100191, China
Tel: +86-10-62304633-2512 Fax: +86-10-62304633-2504
E-mail: cttl@chinattl.com Http://www.chinattl.cn

中国认可
国际互认
校准
CALIBRATION
CNAS L0570

Client **SGS** **Certificate No: Z19-60063**

# CALIBRATION CERTIFICATE

| | |
|---|---|
| Object | EX3DV4 - SN:3793 |
| Calibration Procedure(s) | FF-Z11-004-01<br>Calibration Procedures for Dosimetric E-field Probes |
| Calibration date: | March 25, 2019 |

This calibration Certificate documents the traceability to national standards, which realize the physical units of measurements(SI). The measurements and the uncertainties with confidence probability are given on the following pages and are part of the certificate.

All calibrations have been conducted in the closed laboratory facility: environment temperature(22±3)°C and humidity<70%.

Calibration Equipment used (M&TE critical for calibration)

| Primary Standards | ID # | Cal Date(Calibrated by, Certificate No.) | Scheduled Calibration |
|---|---|---|---|
| Power Meter NRP2 | 101919 | 20-Jun-18 (CTTL, No.J18X05032) | Jun-19 |
| Power sensor NRP-Z91 | 101547 | 20-Jun-18 (CTTL, No.J18X05032) | Jun-19 |
| Power sensor NRP-Z91 | 101548 | 20-Jun-18 (CTTL, No.J18X05032) | Jun-19 |
| Reference10dBAttenuator | 18N50W-10dB | 09-Feb-18(CTTL, No.J18X01133) | Feb-20 |
| Reference20dBAttenuator | 18N50W-20dB | 09-Feb-18(CTTL, No.J18X01132) | Feb-20 |
| Reference Probe EX3DV4 | SN 7514 | 27-Aug-18(SPEAG,No.EX3-7514_Aug18/2) | Aug-19 |
| DAE4 | SN 1555 | 20-Aug-18(SPEAG, No.DAE4-1555_Aug18) | Aug -19 |
| **Secondary Standards** | **ID #** | **Cal Date(Calibrated by, Certificate No.)** | **Scheduled Calibration** |
| SignalGeneratorMG3700A | 6201052605 | 21-Jun-18 (CTTL, No.J18X05033) | Jun-19 |
| Network Analyzer E5071C | MY46110673 | 24-Jan-19 (CTTL, No.J19X00547) | Jan -20 |

| | Name | Function | Signature |
|---|---|---|---|
| Calibrated by: | Yu Zongying | SAR Test Engineer | |
| Reviewed by: | Lin Hao | SAR Test Engineer | |
| Approved by: | Qi Dianyuan | SAR Project Leader | |

Issued: March 27, 2019

This calibration certificate shall not be reproduced except in full without written approval of the laboratory.

Add: No.51 Xueyuan Road, Haidian District, Beijing, 100191, China
Tel: +86-10-62304633-2512 Fax: +86-10-62304633-2504
E-mail: cttl@chinattl.com Http://www.chinattl.cn

**Glossary:**

| | |
|---|---|
| TSL | tissue simulating liquid |
| NORMx,y,z | sensitivity in free space |
| ConvF | sensitivity in TSL / NORMx,y,z |
| DCP | diode compression point |
| CF | crest factor (1/duty_cycle) of the RF signal |
| A,B,C,D | modulation dependent linearization parameters |
| Polarization Φ | Φ rotation around probe axis |
| Polarization θ | θ rotation around an axis that is in the plane normal to probe axis (at measurement center), i θ=0 is normal to probe axis |
| Connector Angle | information used in DASY system to align probe sensor X to the robot coordinate system |

**Calibration is Performed According to the Following Standards:**

a) IEEE Std 1528-2013, "IEEE Recommended Practice for Determining the Peak Spatial-Averaged Specific Absorption Rate (SAR) in the Human Head from Wireless Communications Devices: Measurement Techniques", June 2013

b) IEC 62209-1, "Measurement procedure for the assessment of Specific Absorption Rate (SAR) from hand-held and body-mounted devices used next to the ear (frequency range of 300 MHz to 6 GHz)", July 2016

c) IEC 62209-2, "Procedure to determine the Specific Absorption Rate (SAR) for wireless communication devices used in close proximity to the human body (frequency range of 30 MHz to 6 GHz)", March 2010

d) KDB 865664, "SAR Measurement Requirements for 100 MHz to 6 GHz"

**Methods Applied and Interpretation of Parameters:**

- *NORMx,y,z:* Assessed for E-field polarization θ=0 (f≤900MHz in TEM-cell; f>1800MHz: waveguide). NORMx,y,z are only intermediate values, i.e., the uncertainties of NORMx,y,z does not effect the $E^2$-field uncertainty inside TSL (see below ConvF).
- *NORM(f)x,y,z = NORMx,y,z* frequency_response* (see Frequency Response Chart). This linearization is implemented in DASY4 software versions later than 4.2. The uncertainty of the frequency response is included in the stated uncertainty of ConvF.
- *DCPx,y,z:* DCP are numerical linearization parameters assessed based on the data of power sweep (no uncertainty required). DCP does not depend on frequency nor media.
- PAR: PAR is the Peak to Average Ratio that is not calibrated but determined based on the signal characteristics.
- *Ax,y,z; Bx,y,z; Cx,y,z;VRx,y,z:*A,B,C are numerical linearization parameters assessed based on the data of power sweep for specific modulation signal. The parameters do not depend on frequency nor media. VR is the maximum calibration range expressed in RMS voltage across the diode.
- *ConvF and Boundary Effect Parameters:* Assessed in flat phantom using E-field (or Temperature Transfer Standard for f≤800MHz) and inside waveguide using analytical field distributions based on power measurements for f >800MHz. The same setups are used for assessment of the parameters applied for boundary compensation (alpha, depth) of which typical uncertainty valued are given. These parameters are used in DASY4 software to improve probe accuracy close to the boundary. The sensitivity in TSL corresponds to NORMx,y,z* ConvF whereby the uncertainty corresponds to that given for ConvF. A frequency dependent ConvF is used in DASY version 4.4 and higher which allows extending the validity from±50MHz to±100MHz.
- *Spherical isotropy (3D deviation from isotropy):* in a field of low gradients realized using a flat phantom exposed by a patch antenna.
- *Sensor Offset:* The sensor offset corresponds to the offset of virtual measurement center from the probe tip (on probe axis). No tolerance required.
- *Connector Angle:* The angle is assessed using the information gained by determining the *NORMx* (no uncertainty required).

In Collaboration with
s p e a g
CALIBRATION LABORATORY
Add: No.51 Xueyuan Road, Haidian District, Beijing, 100191, China
Tel: +86-10-62304633-2512 Fax: +86-10-62304633-2504
E-mail: cttl@chinattl.com Http://www.chinattl.cn

# Probe EX3DV4

# SN: 3793

Calibrated: March 25, 2019

Calibrated for DASY/EASY Systems

(Note: non-compatible with DASY2 system!)

In Collaboration with
s p e a g
CALIBRATION LABORATORY
Add: No.51 Xueyuan Road, Haidian District, Beijing, 100191, China
Tel: +86-10-62304633-2512 Fax: +86-10-62304633-2504
E-mail: cttl@chinattl.com Http://www.chinattl.cn

# DASY/EASY – Parameters of Probe: EX3DV4 – SN: 3793

## Basic Calibration Parameters

| | Sensor X | Sensor Y | Sensor Z | Unc (k=2) |
|---|---|---|---|---|
| Norm(μV/(V/m)²)[A] | 0.48 | 0.46 | 0.47 | ±10.0% |
| DCP(mV)[B] | 102.1 | 104.4 | 103.4 | |

## Modulation Calibration Parameters

| UID | Communication System Name | | A dB | B dB√μV | C | D dB | VR mV | Unc[E] (k=2) |
|---|---|---|---|---|---|---|---|---|
| 0 | CW | X | 0.0 | 0.0 | 1.0 | 0.00 | 166.6 | ±2.5% |
| | | Y | 0.0 | 0.0 | 1.0 | | 162.7 | |
| | | Z | 0.0 | 0.0 | 1.0 | | 164.4 | |

The reported uncertainty of measurement is stated as the standard uncertainty of Measurement multiplied by the coverage factor k=2, which for a normal distribution Corresponds to a coverage probability of approximately 95%.

[A] The uncertainties of Norm X, Y, Z do not affect the $E^2$-field uncertainty inside TSL (see Page 5 and Page 6).
[B] Numerical linearization parameter: uncertainty not required.
[E] Uncertainly is determined using the max. deviation from linear response applying rectangular distribution and is expressed for the square of the field value.

In Collaboration with
s p e a g
CALIBRATION LABORATORY
Add: No.51 Xueyuan Road, Haidian District, Beijing, 100191, China
Tel: +86-10-62304633-2512 Fax: +86-10-62304633-2504
E-mail: cttl@chinattl.com Http://www.chinattl.cn

# DASY/EASY – Parameters of Probe: EX3DV4 – SN: 3793

## Calibration Parameter Determined in Head Tissue Simulating Media

| f [MHz][C] | Relative Permittivity [F] | Conductivity (S/m) [F] | ConvF X | ConvF Y | ConvF Z | Alpha[G] | Depth[G] (mm) | Unct. (k=2) |
|---|---|---|---|---|---|---|---|---|
| 750 | 41.9 | 0.89 | 9.41 | 9.41 | 9.41 | 0.11 | 1.39 | ±12.1% |
| 835 | 41.5 | 0.90 | 9.04 | 9.04 | 9.04 | 0.07 | 1.80 | ±12.1% |
| 1750 | 40.1 | 1.37 | 7.85 | 7.85 | 7.85 | 0.20 | 1.15 | ±12.1% |
| 1900 | 40.0 | 1.40 | 7.54 | 7.54 | 7.54 | 0.28 | 0.99 | ±12.1% |
| 2450 | 39.2 | 1.80 | 6.93 | 6.93 | 6.93 | 0.63 | 0.70 | ±12.1% |
| 2600 | 39.0 | 1.96 | 6.78 | 6.78 | 6.78 | 0.52 | 0.78 | ±12.1% |
| 3500 | 37.9 | 2.91 | 6.43 | 6.43 | 6.43 | 0.65 | 0.92 | ±13.3% |
| 3700 | 37.7 | 3.12 | 6.34 | 6.34 | 6.34 | 0.65 | 0.85 | ±13.3% |

[C] Frequency validity above 300 MHz of ±100MHz only applies for DASY v4.4 and higher (Page 2), else it is restricted to ±50MHz. The uncertainty is the RSS of ConvF uncertainty at calibration frequency and the uncertainty for the indicated frequency band. Frequency validity below 300 MHz is ± 10, 25, 40, 50 and 70 MHz for ConvF assessments at 30, 64, 128, 150 and 220 MHz respectively. Above 5 GHz frequency validity can be extended to ± 110 MHz.

[F] At frequency below 3 GHz, the validity of tissue parameters (ε and σ) can be relaxed to ±10% if liquid compensation formula is applied to measured SAR values. At frequencies above 3 GHz, the validity of tissue parameters (ε and σ) is restricted to ±5%. The uncertainty is the RSS of the ConvF uncertainty for indicated target tissue parameters.

[G] Alpha/Depth are determined during calibration. SPEAG warrants that the remaining deviation due to the boundary effect after compensation is always less than ± 1% for frequencies below 3 GHz and below ± 2% for the frequencies between 3-6 GHz at any distance larger than half the probe tip diameter from the boundary.

In Collaboration with
s p e a g
CALIBRATION LABORATORY
Add: No.51 Xueyuan Road, Haidian District, Beijing, 100191, China
Tel: +86-10-62304633-2512 Fax: +86-10-62304633-2504
E-mail: cttl@chinattl.com Http://www.chinattl.cn

# DASY/EASY – Parameters of Probe: EX3DV4 – SN: 3793

## Calibration Parameter Determined in Body Tissue Simulating Media

| f [MHz][C] | Relative Permittivity [F] | Conductivity (S/m) [F] | ConvF X | ConvF Y | ConvF Z | Alpha[G] | Depth[G] (mm) | Unct. (k=2) |
|---|---|---|---|---|---|---|---|---|
| 750 | 55.5 | 0.96 | 9.43 | 9.43 | 9.43 | 0.40 | 0.80 | ±12.1% |
| 835 | 55.2 | 0.97 | 9.11 | 9.11 | 9.11 | 0.19 | 1.35 | ±12.1% |
| 1750 | 53.4 | 1.49 | 7.56 | 7.56 | 7.56 | 0.20 | 1.19 | ±12.1% |
| 1900 | 53.3 | 1.52 | 7.41 | 7.41 | 7.41 | 0.21 | 1.18 | ±12.1% |
| 2450 | 52.7 | 1.95 | 7.12 | 7.12 | 7.12 | 0.60 | 0.75 | ±12.1% |
| 2600 | 52.5 | 2.16 | 6.87 | 6.87 | 6.87 | 0.67 | 0.70 | ±12.1% |
| 3500 | 51.3 | 3.31 | 6.23 | 6.23 | 6.23 | 0.52 | 1.08 | ±13.3% |
| 3700 | 51.0 | 3.55 | 6.15 | 6.15 | 6.15 | 0.52 | 1.05 | ±13.3% |

[C] Frequency validity above 300 MHz of ±100MHz only applies for DASY v4.4 and higher (Page 2), else it is restricted to ±50MHz. The uncertainty is the RSS of ConvF uncertainty at calibration frequency and the uncertainty for the indicated frequency band. Frequency validity below 300 MHz is ± 10, 25, 40, 50 and 70 MHz for ConvF assessments at 30, 64, 128, 150 and 220 MHz respectively. Above 5 GHz frequency validity can be extended to ± 110 MHz.

[F] At frequency below 3 GHz, the validity of tissue parameters (ε and σ) can be relaxed to ±10% if liquid compensation formula is applied to measured SAR values. At frequencies above 3 GHz, the validity of tissue parameters (ε and σ) is restricted to ±5%. The uncertainty is the RSS of the ConvF uncertainty for indicated target tissue parameters.

[G] Alpha/Depth are determined during calibration. SPEAG warrants that the remaining deviation due to the boundary effect after compensation is always less than ± 1% for frequencies below 3 GHz and below ± 2% for the frequencies between 3-6 GHz at any distance larger than half the probe tip diameter from the boundary.

In Collaboration with
s p e a g
CALIBRATION LABORATORY
Add: No.51 Xueyuan Road, Haidian District, Beijing, 100191, China
Tel: +86-10-62304633-2512 Fax: +86-10-62304633-2504
E-mail: cttl@chinattl.com Http://www.chinattl.cn

# Frequency Response of E-Field
## (TEM-Cell: ifi110 EXX, Waveguide: R22)

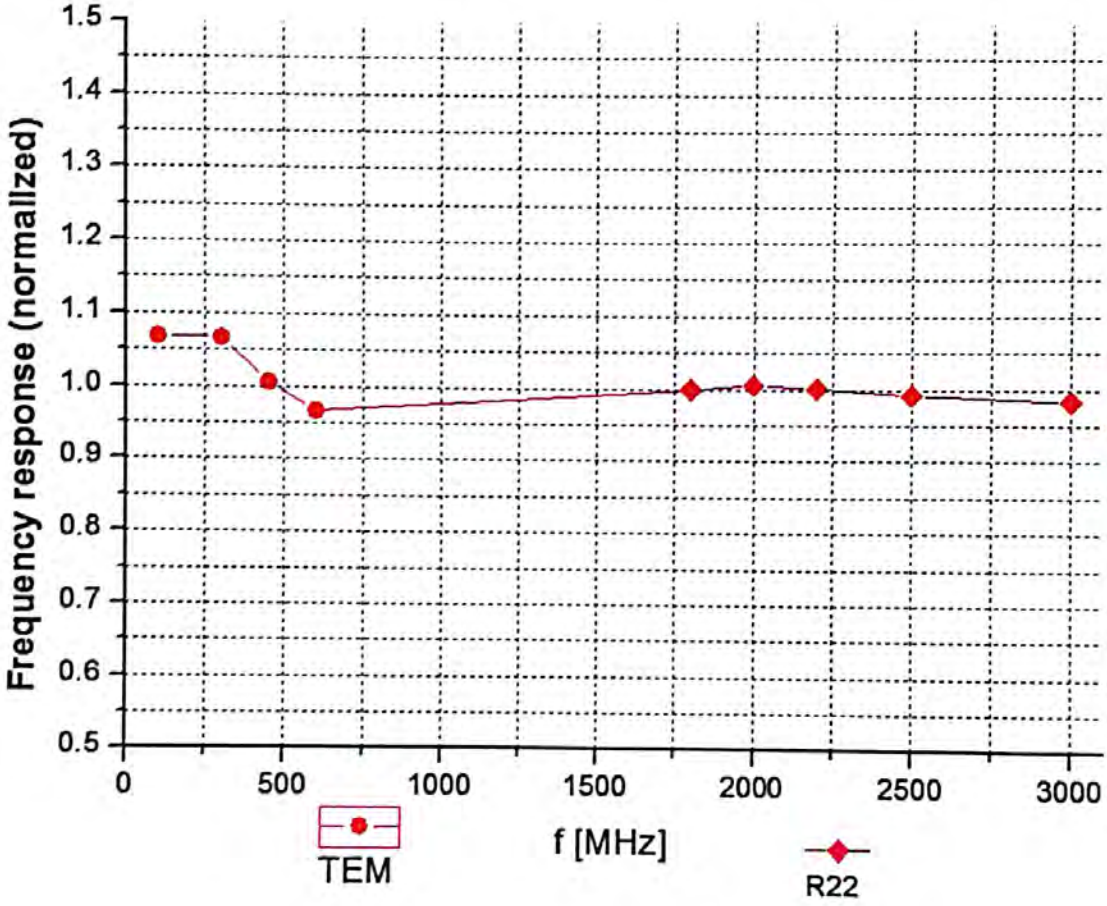


**Uncertainty of Frequency Response of E-field: ±7.4% (k=2)**

In Collaboration with
s p e a g
CALIBRATION LABORATORY
Add: No.51 Xueyuan Road, Haidian District, Beijing, 100191, China
Tel: +86-10-62304633-2512 Fax: +86-10-62304633-2504
E-mail: cttl@chinattl.com Http://www.chinattl.cn

# Receiving Pattern (Φ), θ=0°

## f=600 MHz, TEM

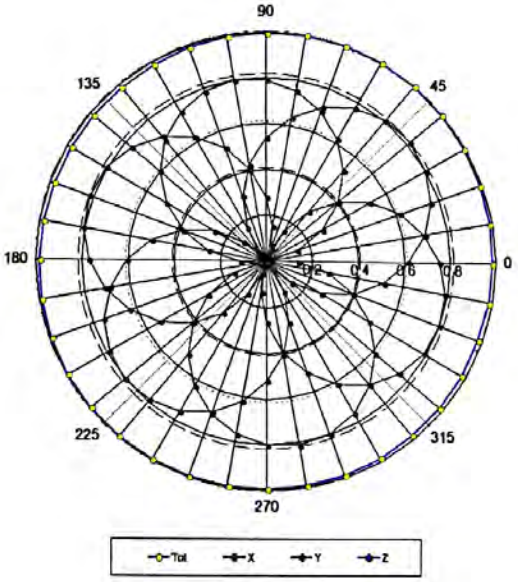


## f=1800 MHz, R22

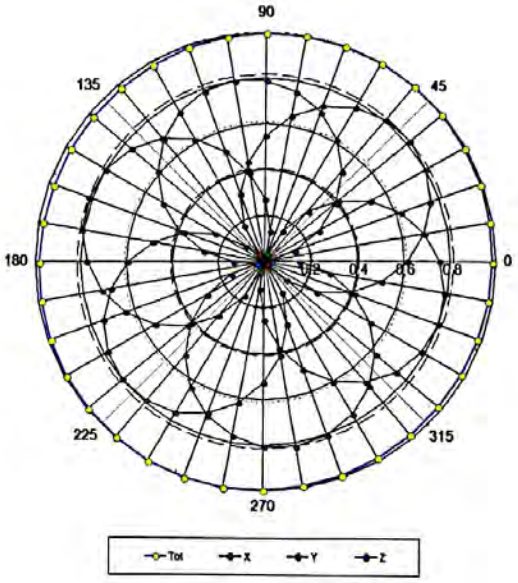


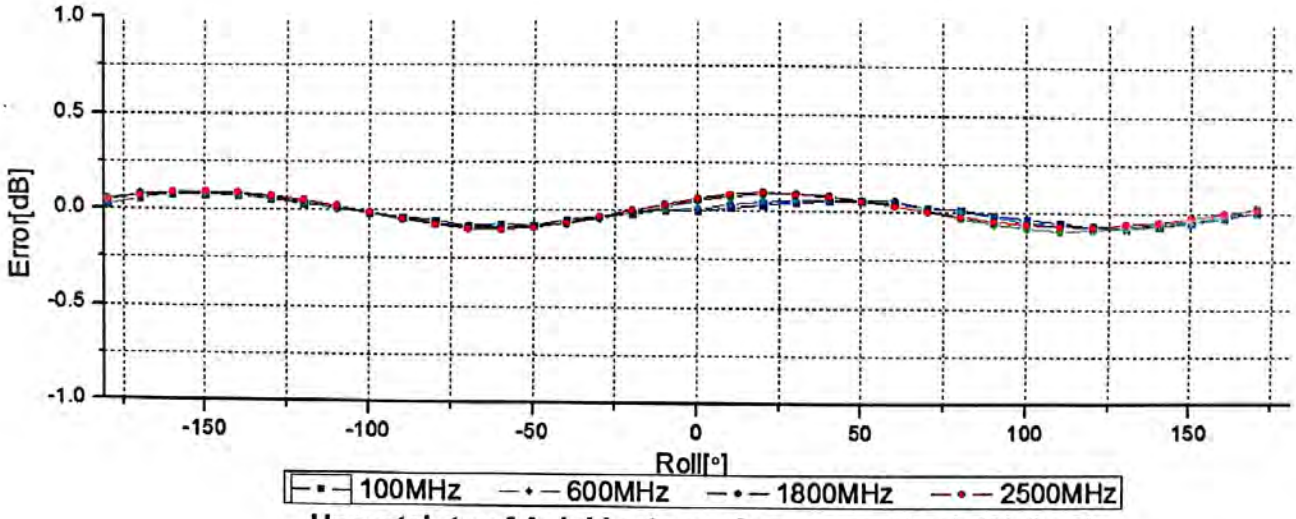


**Uncertainty of Axial Isotropy Assessment: ±1.2% (k=2)**

In Collaboration with
s p e a g
CALIBRATION LABORATORY
Add: No.51 Xueyuan Road, Haidian District, Beijing, 100191, China
Tel: +86-10-62304633-2512 Fax: +86-10-62304633-2504
E-mail: cttl@chinattl.com Http://www.chinattl.cn

# Dynamic Range f(SAR$_{head}$)
## (TEM cell, f = 900 MHz)

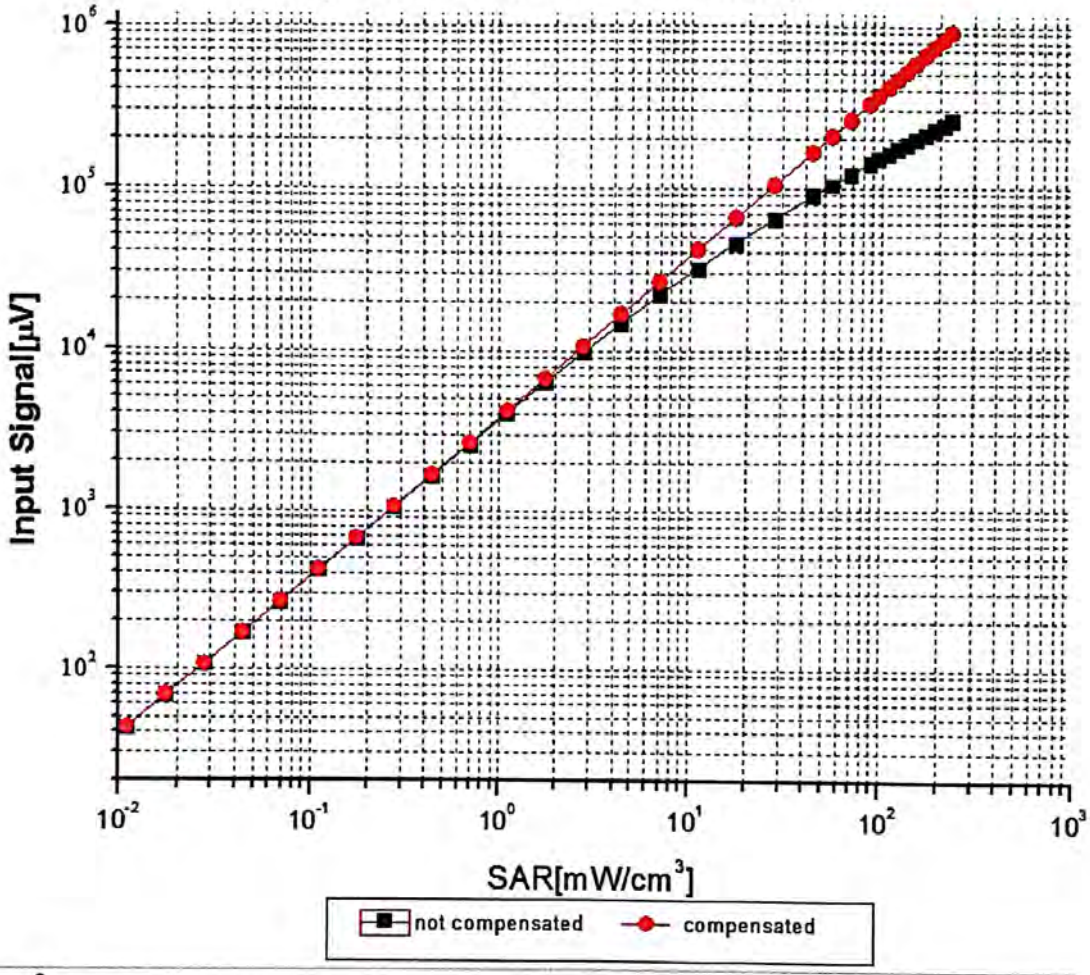


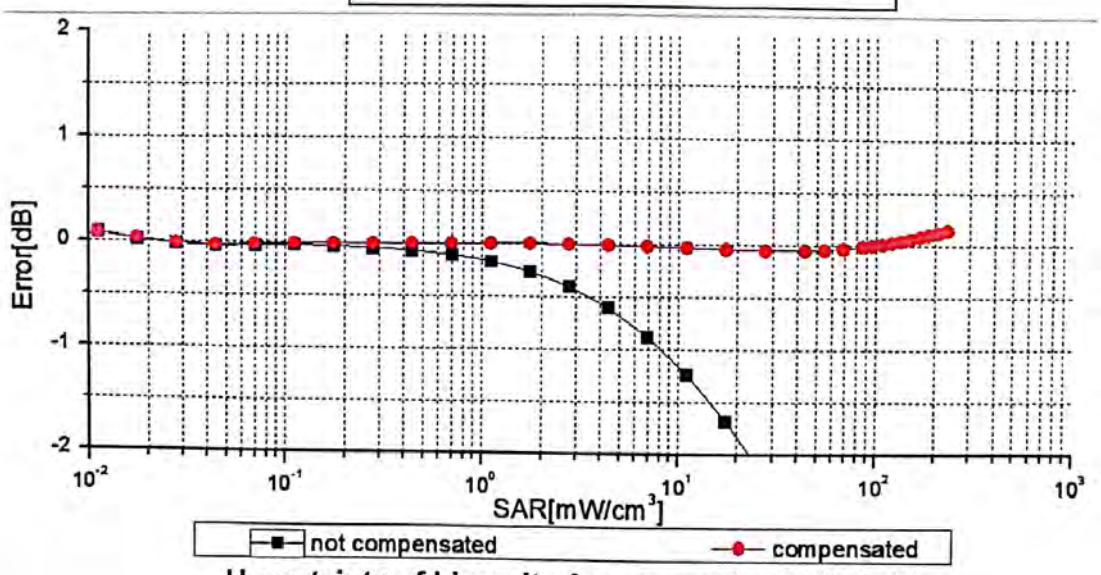


**Uncertainty of Linearity Assessment: ±0.9% (k=2)**

In Collaboration with
s p e a g
CALIBRATION LABORATORY
Add: No.51 Xueyuan Road, Haidian District, Beijing, 100191, China
Tel: +86-10-62304633-2512 Fax: +86-10-62304633-2504
E-mail: cttl@chinattl.com Http://www.chinattl.cn

# Conversion Factor Assessment

## f=750 MHz, WGLS R9(H_convF)

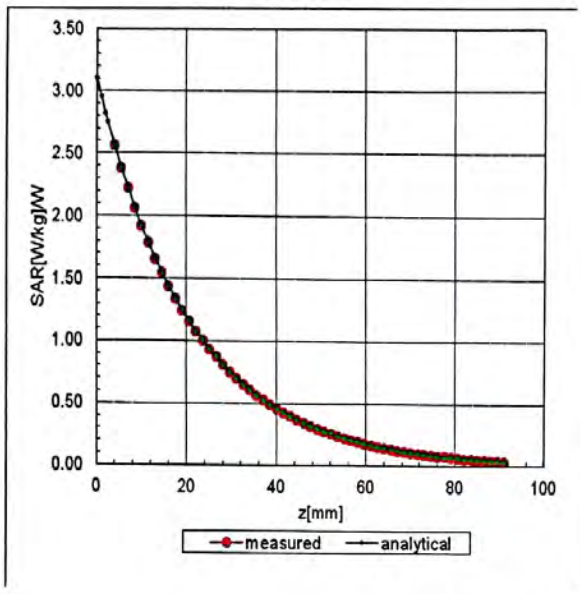


## f=1750 MHz, WGLS R22(H_convF)

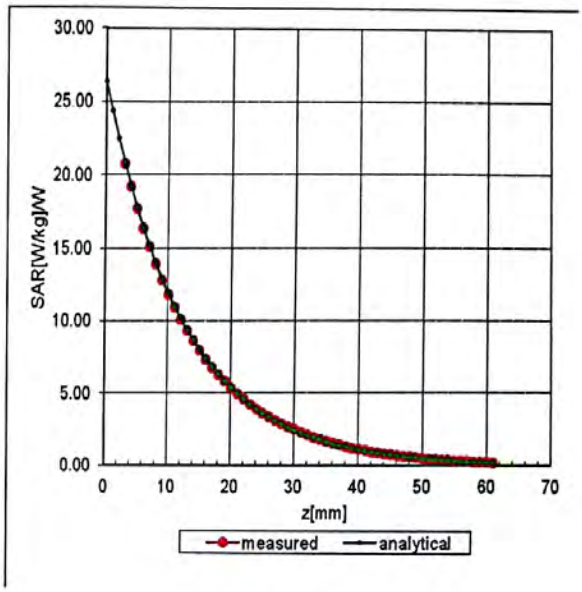


# Deviation from Isotropy in Liquid

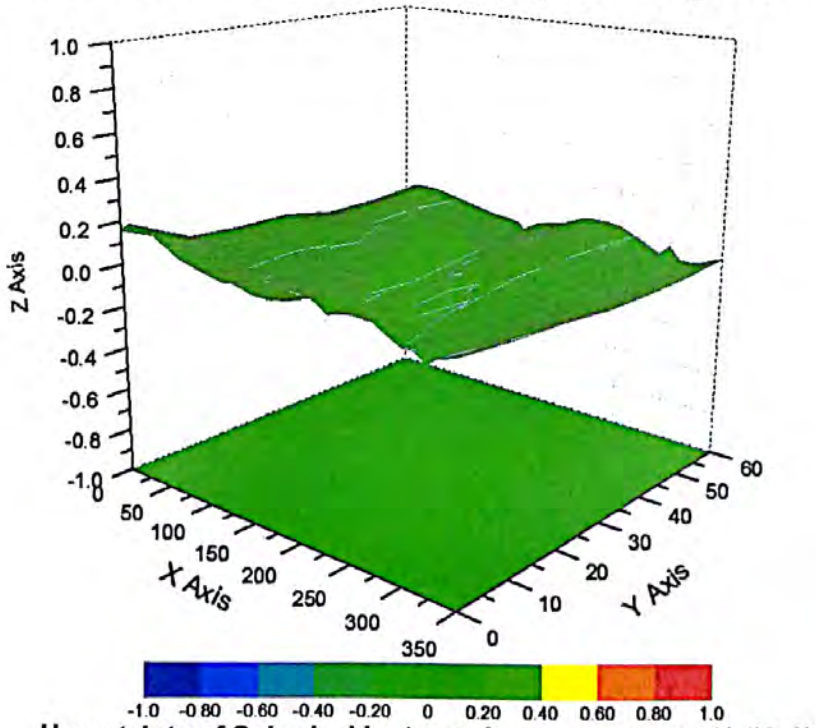


**Uncertainty of Spherical Isotropy Assessment: ±3.2% (K=2)**

In Collaboration with
s p e a g
CALIBRATION LABORATORY
Add: No.51 Xueyuan Road, Haidian District, Beijing, 100191, China
Tel: +86-10-62304633-2512 Fax: +86-10-62304633-2504
E-mail: cttl@chinattl.com Http://www.chinattl.cn

# DASY/EASY – Parameters of Probe: EX3DV4 – SN: 3793

## Other Probe Parameters

| | |
|---|---|
| Sensor Arrangement | Triangular |
| Connector Angle (°) | 117.4 |
| Mechanical Surface Detection Mode | enabled |
| Optical Surface Detection Mode | disable |
| Probe Overall Length | 337mm |
| Probe Body Diameter | 10mm |
| Tip Length | 9mm |
| Tip Diameter | 2.5mm |
| Probe Tip to Sensor X Calibration Point | 1mm |
| Probe Tip to Sensor Y Calibration Point | 1mm |
| Probe Tip to Sensor Z Calibration Point | 1mm |
| Recommended Measurement Distance from Surface | 1.4mm |

In Collaboration with
s p e a g
CALIBRATION LABORATORY

中国认可
国际互认
校准
CALIBRATION
CNAS L0570

Add: No.51 Xueyuan Road, Haidian District, Beijing, 100191, China
Tel: +86-10-62304633-2512 Fax: +86-10-62304633-2504
E-mail: cttl@chinattl.com Http://www.chinattl.cn

Client **SGS** **Certificate No: Z18-60356**

# CALIBRATION CERTIFICATE

Object EX3DV4 - SN:3923

Calibration Procedure(s) FF-Z11-004-01
Calibration Procedures for Dosimetric E-field Probes

Calibration date: September 30, 2018

This calibration Certificate documents the traceability to national standards, which realize the physical units of measurements(SI). The measurements and the uncertainties with confidence probability are given on the following pages and are part of the certificate.

All calibrations have been conducted in the closed laboratory facility: environment temperature(22±3)℃ and humidity<70%.

Calibration Equipment used (M&TE critical for calibration)

| Primary Standards | ID # | Cal Date(Calibrated by, Certificate No.) | Scheduled Calibration |
|---|---|---|---|
| Power Meter NRP2 | 101919 | 20-Jun-18 (CTTL, No.J18X05032) | Jun-19 |
| Power sensor NRP-Z91 | 101547 | 20-Jun-18 (CTTL, No.J18X05032) | Jun-19 |
| Power sensor NRP-Z91 | 101548 | 20-Jun-18 (CTTL, No.J18X05032) | Jun-19 |
| Reference10dBAttenuator | 18N50W-10dB | 09-Feb-18(CTTL, No.J18X01133) | Feb-20 |
| Reference20dBAttenuator | 18N50W-20dB | 09-Feb-18(CTTL, No.J18X01132) | Feb-20 |
| Reference Probe EX3DV4 | SN 3846 | 25-Jan-18(SPEAG,No.EX3-3846_Jan18) | Jan-19 |
| DAE4 | SN 777 | 15-Dec-17(SPEAG, No.DAE4-777_Dec17) | Dec -18 |
| **Secondary Standards** | **ID #** | **Cal Date(Calibrated by, Certificate No.)** | **Scheduled Calibration** |
| SignalGeneratorMG3700A | 6201052605 | 21-Jun-18 (CTTL, No.J18X05033) | Jun-19 |
| Network Analyzer E5071C | MY46110673 | 14-Jan-18 (CTTL, No.J18X00561) | Jan -19 |

| | Name | Function | Signature |
|---|---|---|---|
| Calibrated by: | Yu Zongying | SAR Test Engineer | |
| Reviewed by: | Lin Hao | SAR Test Engineer | |
| Approved by: | Qi Dianyuan | SAR Project Leader | |

Issued: October 09, 2018

This calibration certificate shall not be reproduced except in full without written approval of the laboratory.

In Collaboration with
s p e a g
CALIBRATION LABORATORY

中国认可
国际互认
校准
CALIBRATION
CNAS L0570

Add: No.51 Xueyuan Road, Haidian District, Beijing, 100191, China
Tel: +86-10-62304633-2512 Fax: +86-10-62304633-2504
E-mail: cttl@chinattl.com Http://www.chinattl.cn

Client **SGS** **Certificate No: Z18-60356**

# CALIBRATION CERTIFICATE

Object: EX3DV4 - SN:3923

Calibration Procedure(s): FF-Z11-004-01
Calibration Procedures for Dosimetric E-field Probes

Calibration date: September 30, 2018

This calibration Certificate documents the traceability to national standards, which realize the physical units of measurements(SI). The measurements and the uncertainties with confidence probability are given on the following pages and are part of the certificate.

All calibrations have been conducted in the closed laboratory facility: environment temperature(22±3)°C and humidity<70%.

Calibration Equipment used (M&TE critical for calibration)

| Primary Standards | ID # | Cal Date(Calibrated by, Certificate No.) | Scheduled Calibration |
|---|---|---|---|
| Power Meter NRP2 | 101919 | 20-Jun-18 (CTTL, No.J18X05032) | Jun-19 |
| Power sensor NRP-Z91 | 101547 | 20-Jun-18 (CTTL, No.J18X05032) | Jun-19 |
| Power sensor NRP-Z91 | 101548 | 20-Jun-18 (CTTL, No.J18X05032) | Jun-19 |
| Reference10dBAttenuator | 18N50W-10dB | 09-Feb-18(CTTL, No.J18X01133) | Feb-20 |
| Reference20dBAttenuator | 18N50W-20dB | 09-Feb-18(CTTL, No.J18X01132) | Feb-20 |
| Reference Probe EX3DV4 | SN 3846 | 25-Jan-18(SPEAG,No.EX3-3846_Jan18) | Jan-19 |
| DAE4 | SN 777 | 15-Dec-17(SPEAG, No.DAE4-777_Dec17) | Dec -18 |
| **Secondary Standards** | **ID #** | **Cal Date(Calibrated by, Certificate No.)** | **Scheduled Calibration** |
| SignalGeneratorMG3700A | 6201052605 | 21-Jun-18 (CTTL, No.J18X05033) | Jun-19 |
| Network Analyzer E5071C | MY46110673 | 14-Jan-18 (CTTL, No.J18X00561) | Jan -19 |

| | Name | Function | Signature |
|---|---|---|---|
| Calibrated by: | Yu Zongying | SAR Test Engineer | |
| Reviewed by: | Lin Hao | SAR Test Engineer | |
| Approved by: | Qi Dianyuan | SAR Project Leader | |

Issued: October 09, 2018

This calibration certificate shall not be reproduced except in full without written approval of the laboratory.

Add: No.51 Xueyuan Road, Haidian District, Beijing, 100191, China
Tel: +86-10-62304633-2512 Fax: +86-10-62304633-2504
E-mail: cttl@chinattl.com Http://www.chinattl.cn

## Glossary:

| | |
|---|---|
| TSL | tissue simulating liquid |
| NORMx,y,z | sensitivity in free space |
| ConvF | sensitivity in TSL / NORMx,y,z |
| DCP | diode compression point |
| CF | crest factor (1/duty_cycle) of the RF signal |
| A,B,C,D | modulation dependent linearization parameters |
| Polarization Φ | Φ rotation around probe axis |
| Polarization θ | θ rotation around an axis that is in the plane normal to probe axis (at measurement center), i θ=0 is normal to probe axis |
| Connector Angle | information used in DASY system to align probe sensor X to the robot coordinate system |

## Calibration is Performed According to the Following Standards:

a) IEEE Std 1528-2013, "IEEE Recommended Practice for Determining the Peak Spatial-Averaged Specific Absorption Rate (SAR) in the Human Head from Wireless Communications Devices: Measurement Techniques", June 2013

b) IEC 62209-1, "Measurement procedure for the assessment of Specific Absorption Rate (SAR) from hand-held and body-mounted devices used next to the ear (frequency range of 300 MHz to 6 GHz)", July 2016

c) IEC 62209-2, "Procedure to determine the Specific Absorption Rate (SAR) for wireless communication devices used in close proximity to the human body (frequency range of 30 MHz to 6 GHz)", March 2010

d) KDB 865664, "SAR Measurement Requirements for 100 MHz to 6 GHz"

## Methods Applied and Interpretation of Parameters:

- *NORMx,y,z:* Assessed for E-field polarization θ=0 (f≤900MHz in TEM-cell; f>1800MHz: waveguide). NORMx,y,z are only intermediate values, i.e., the uncertainties of NORMx,y,z does not effect the $E^2$-field uncertainty inside TSL (see below ConvF).
- *NORM(f)x,y,z = NORMx,y,z* frequency_response* (see Frequency Response Chart). This linearization is implemented in DASY4 software versions later than 4.2. The uncertainty of the frequency response is included in the stated uncertainty of ConvF.
- *DCPx,y,z:* DCP are numerical linearization parameters assessed based on the data of power sweep (no uncertainty required). DCP does not depend on frequency nor media.
- PAR: PAR is the Peak to Average Ratio that is not calibrated but determined based on the signal characteristics.
- *Ax,y,z; Bx,y,z; Cx,y,z;VRx,y,z:*A,B,C are numerical linearization parameters assessed based on the data of power sweep for specific modulation signal. The parameters do not depend on frequency nor media. VR is the maximum calibration range expressed in RMS voltage across the diode.
- *ConvF and Boundary Effect Parameters:* Assessed in flat phantom using E-field (or Temperature Transfer Standard for f≤800MHz) and inside waveguide using analytical field distributions based on power measurements for f >800MHz. The same setups are used for assessment of the parameters applied for boundary compensation (alpha, depth) of which typical uncertainty valued are given. These parameters are used in DASY4 software to improve probe accuracy close to the boundary. The sensitivity in TSL corresponds to NORMx,y,z* ConvF whereby the uncertainty corresponds to that given for ConvF. A frequency dependent ConvF is used in DASY version 4.4 and higher which allows extending the validity from±50MHz to±100MHz.
- *Spherical isotropy (3D deviation from isotropy):* in a field of low gradients realized using a flat phantom exposed by a patch antenna.
- *Sensor Offset:* The sensor offset corresponds to the offset of virtual measurement center from the probe tip (on probe axis). No tolerance required.
- *Connector Angle:* The angle is assessed using the information gained by determining the *NORMx* (no uncertainty required).

In Collaboration with
s p e a g
CALIBRATION LABORATORY

Add: No.51 Xueyuan Road, Haidian District, Beijing, 100191, China
Tel: +86-10-62304633-2512 Fax: +86-10-62304633-2504
E-mail: cttl@chinattl.com Http://www.chinattl.cn

# Probe EX3DV4

# SN: 3923

Calibrated: September 30, 2018

Calibrated for DASY/EASY Systems

(Note: non-compatible with DASY2 system!)

In Collaboration with
s p e a g
CALIBRATION LABORATORY

Add: No.51 Xueyuan Road, Haidian District, Beijing, 100191, China
Tel: +86-10-62304633-2512 Fax: +86-10-62304633-2504
E-mail: cttl@chinattl.com Http://www.chinattl.cn

# DASY/EASY – Parameters of Probe: EX3DV4 – SN: 3923

## Basic Calibration Parameters

| | Sensor X | Sensor Y | Sensor Z | Unc (k=2) |
|---|---|---|---|---|
| Norm(μV/(V/m)²)[A] | 0.58 | 0.47 | 0.48 | ±10.0% |
| DCP(mV)[B] | 101.6 | 103.7 | 103.8 | |

## Modulation Calibration Parameters

| UID | Communication System Name | | A dB | B dB√μV | C | D dB | VR mV | Unc[E] (k=2) |
|---|---|---|---|---|---|---|---|---|
| 0 | CW | X | 0.0 | 0.0 | 1.0 | 0.00 | 189.4 | ±2.1% |
| | | Y | 0.0 | 0.0 | 1.0 | | 162.7 | |
| | | Z | 0.0 | 0.0 | 1.0 | | 164.8 | |

The reported uncertainty of measurement is stated as the standard uncertainty of Measurement multiplied by the coverage factor k=2, which for a normal distribution Corresponds to a coverage probability of approximately 95%.

[A] The uncertainties of Norm X, Y, Z do not affect the $E^2$-field uncertainty inside TSL (see Page 5 and Page 6).
[B] Numerical linearization parameter: uncertainty not required.
[E] Uncertainly is determined using the max. deviation from linear response applying rectangular distribution and is expressed for the square of the field value.

In Collaboration with
s p e a g
CALIBRATION LABORATORY
Add: No.51 Xueyuan Road, Haidian District, Beijing, 100191, China
Tel: +86-10-62304633-2512 Fax: +86-10-62304633-2504
E-mail: cttl@chinattl.com Http://www.chinattl.cn

# DASY/EASY – Parameters of Probe: EX3DV4 – SN: 3923

## Calibration Parameter Determined in Head Tissue Simulating Media

| f [MHz][C] | Relative Permittivity [F] | Conductivity (S/m) [F] | ConvF X | ConvF Y | ConvF Z | Alpha[G] | Depth[G] (mm) | Unct. (k=2) |
|---|---|---|---|---|---|---|---|---|
| 750 | 41.9 | 0.89 | 10.59 | 10.59 | 10.59 | 0.40 | 0.80 | ±12.1% |
| 835 | 41.5 | 0.90 | 10.37 | 10.37 | 10.37 | 0.15 | 1.45 | ±12.1% |
| 1450 | 40.5 | 1.20 | 9.23 | 9.23 | 9.23 | 0.10 | 1.41 | ±12.1% |
| 1640 | 40.3 | 1.29 | 9.04 | 9.04 | 9.04 | 0.25 | 0.97 | ±12.1% |
| 1750 | 40.1 | 1.37 | 8.92 | 8.92 | 8.92 | 0.22 | 1.07 | ±12.1% |
| 1900 | 40.0 | 1.40 | 8.51 | 8.51 | 8.51 | 0.26 | 1.00 | ±12.1% |
| 2000 | 40.0 | 1.40 | 8.65 | 8.65 | 8.65 | 0.23 | 1.01 | ±12.1% |
| 2450 | 39.2 | 1.80 | 7.86 | 7.86 | 7.86 | 0.40 | 0.91 | ±12.1% |
| 2600 | 39.0 | 1.96 | 7.66 | 7.66 | 7.66 | 0.49 | 0.82 | ±12.1% |
| 5250 | 35.9 | 4.71 | 5.32 | 5.32 | 5.32 | 0.40 | 1.75 | ±13.3% |
| 5600 | 35.5 | 5.07 | 4.89 | 4.89 | 4.89 | 0.45 | 1.20 | ±13.3% |
| 5750 | 35.4 | 5.22 | 4.80 | 4.80 | 4.80 | 0.45 | 1.65 | ±13.3% |

[C] Frequency validity above 300 MHz of ±100MHz only applies for DASY v4.4 and higher (Page 2), else it is restricted to ±50MHz. The uncertainty is the RSS of ConvF uncertainty at calibration frequency and the uncertainty for the indicated frequency band. Frequency validity below 300 MHz is ± 10, 25, 40, 50 and 70 MHz for ConvF assessments at 30, 64, 128, 150 and 220 MHz respectively. Above 5 GHz frequency validity can be extended to ± 110 MHz.

[F] At frequency below 3 GHz, the validity of tissue parameters (ε and σ) can be relaxed to ±10% if liquid compensation formula is applied to measured SAR values. At frequencies above 3 GHz, the validity of tissue parameters (ε and σ) is restricted to ±5%. The uncertainty is the RSS of the ConvF uncertainty for indicated target tissue parameters.

[G] Alpha/Depth are determined during calibration. SPEAG warrants that the remaining deviation due to the boundary effect after compensation is always less than ± 1% for frequencies below 3 GHz and below ± 2% for the frequencies between 3-6 GHz at any distance larger than half the probe tip diameter from the boundary.

In Collaboration with
s p e a g
CALIBRATION LABORATORY
Add: No.51 Xueyuan Road, Haidian District, Beijing, 100191, China
Tel: +86-10-62304633-2512 Fax: +86-10-62304633-2504
E-mail: cttl@chinattl.com Http://www.chinattl.cn

# DASY/EASY – Parameters of Probe: EX3DV4 – SN: 3923

## Calibration Parameter Determined in Body Tissue Simulating Media

| f [MHz][C] | Relative Permittivity [F] | Conductivity (S/m) [F] | ConvF X | ConvF Y | ConvF Z | Alpha[G] | Depth[G] (mm) | Unct. (k=2) |
|---|---|---|---|---|---|---|---|---|
| 750 | 55.5 | 0.96 | 10.80 | 10.80 | 10.80 | 0.40 | 0.80 | ±12.1% |
| 835 | 55.2 | 0.97 | 10.47 | 10.47 | 10.47 | 0.19 | 1.37 | ±12.1% |
| 1750 | 53.4 | 1.49 | 8.51 | 8.51 | 8.51 | 0.27 | 0.99 | ±12.1% |
| 1900 | 53.3 | 1.52 | 8.14 | 8.14 | 8.14 | 0.20 | 1.18 | ±12.1% |
| 2450 | 52.7 | 1.95 | 7.87 | 7.87 | 7.87 | 0.65 | 0.71 | ±12.1% |
| 2600 | 52.5 | 2.16 | 7.48 | 7.48 | 7.48 | 0.65 | 0.68 | ±12.1% |
| 5250 | 48.9 | 5.36 | 4.87 | 4.87 | 4.87 | 0.50 | 1.55 | ±13.3% |
| 5600 | 48.5 | 5.77 | 4.22 | 4.22 | 4.22 | 0.50 | 1.70 | ±13.3% |
| 5750 | 48.3 | 5.94 | 4.37 | 4.37 | 4.37 | 0.50 | 1.70 | ±13.3% |

[C] Frequency validity above 300 MHz of ±100MHz only applies for DASY v4.4 and higher (Page 2), else it is restricted to ±50MHz. The uncertainty is the RSS of ConvF uncertainty at calibration frequency and the uncertainty for the indicated frequency band. Frequency validity below 300 MHz is ± 10, 25, 40, 50 and 70 MHz for ConvF assessments at 30, 64, 128, 150 and 220 MHz respectively. Above 5 GHz frequency validity can be extended to ± 110 MHz.

[F] At frequency below 3 GHz, the validity of tissue parameters (ε and σ) can be relaxed to ±10% if liquid compensation formula is applied to measured SAR values. At frequencies above 3 GHz, the validity of tissue parameters (ε and σ) is restricted to ±5%. The uncertainty is the RSS of the ConvF uncertainty for indicated target tissue parameters.

[G] Alpha/Depth are determined during calibration. SPEAG warrants that the remaining deviation due to the boundary effect after compensation is always less than ± 1% for frequencies below 3 GHz and below ± 2% for the frequencies between 3-6 GHz at any distance larger than half the probe tip diameter from the boundary.

In Collaboration with
s p e a g
CALIBRATION LABORATORY
Add: No.51 Xueyuan Road, Haidian District, Beijing, 100191, China
Tel: +86-10-62304633-2512 Fax: +86-10-62304633-2504
E-mail: cttl@chinattl.com Http://www.chinattl.cn

# Frequency Response of E-Field
## (TEM-Cell: ifi110 EXX, Waveguide: R22)

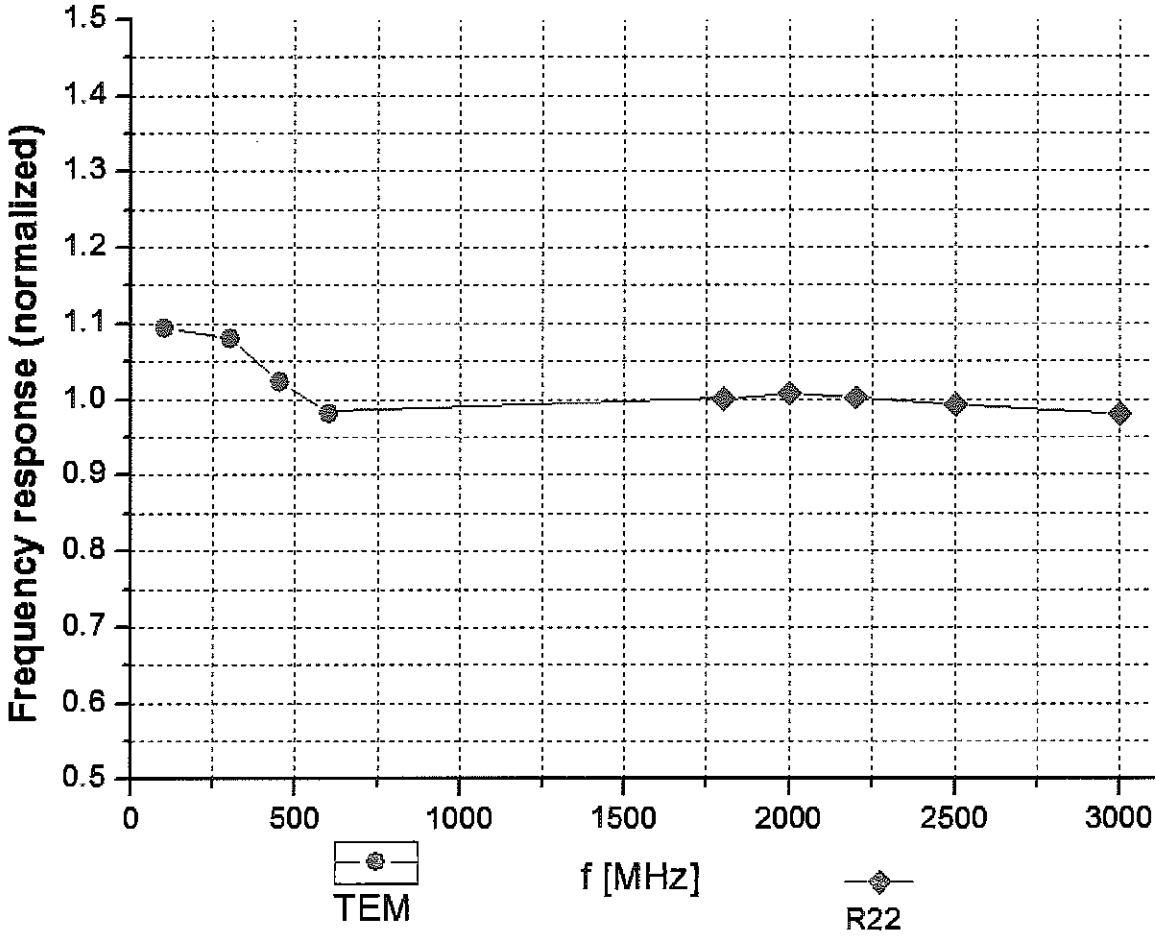


**Uncertainty of Frequency Response of E-field: ±7.4% (k=2)**

In Collaboration with
s p e a g
CALIBRATION LABORATORY

Add: No.51 Xueyuan Road, Haidian District, Beijing, 100191, China
Tel: +86-10-62304633-2512 Fax: +86-10-62304633-2504
E-mail: cttl@chinattl.com Http://www.chinattl.cn

# Receiving Pattern (Φ), θ=0°

## f=600 MHz, TEM

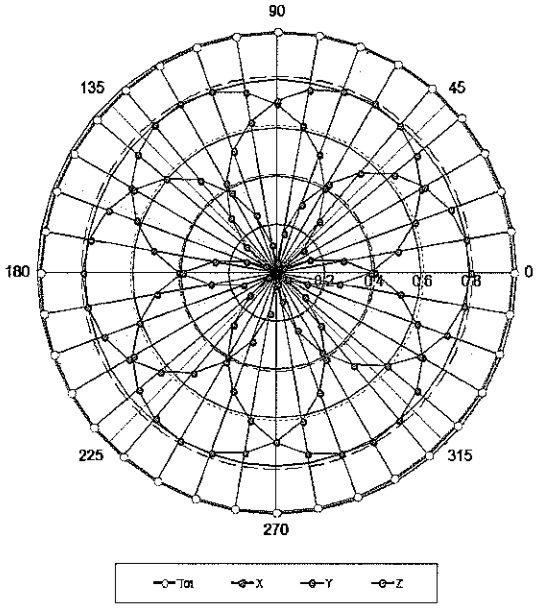


## f=1800 MHz, R22

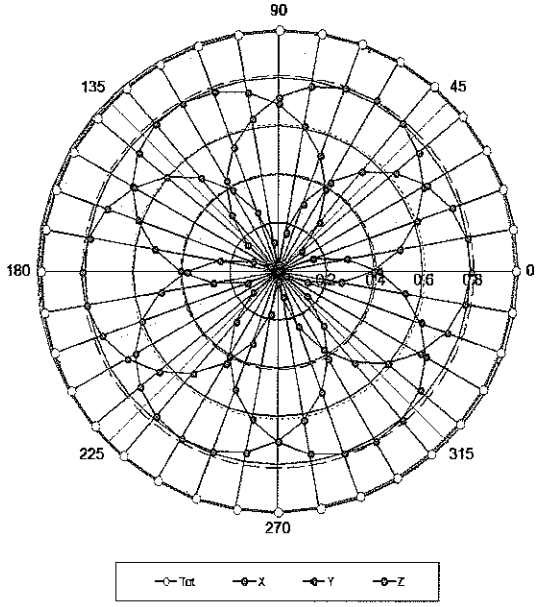


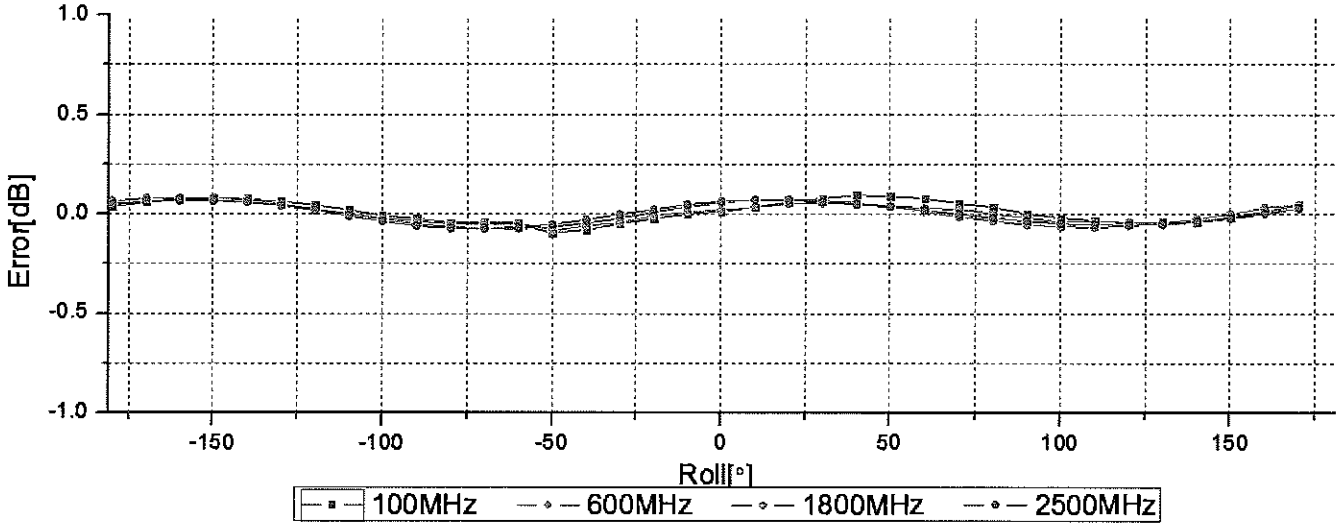


**Uncertainty of Axial Isotropy Assessment: ±1.2% (k=2)**

Add: No.51 Xueyuan Road, Haidian District, Beijing, 100191, China
Tel: +86-10-62304633-2512 Fax: +86-10-62304633-2504
E-mail: cttl@chinattl.com Http://www.chinattl.cn

# Dynamic Range f(SAR$_{head}$)
## (TEM cell, f = 900 MHz)

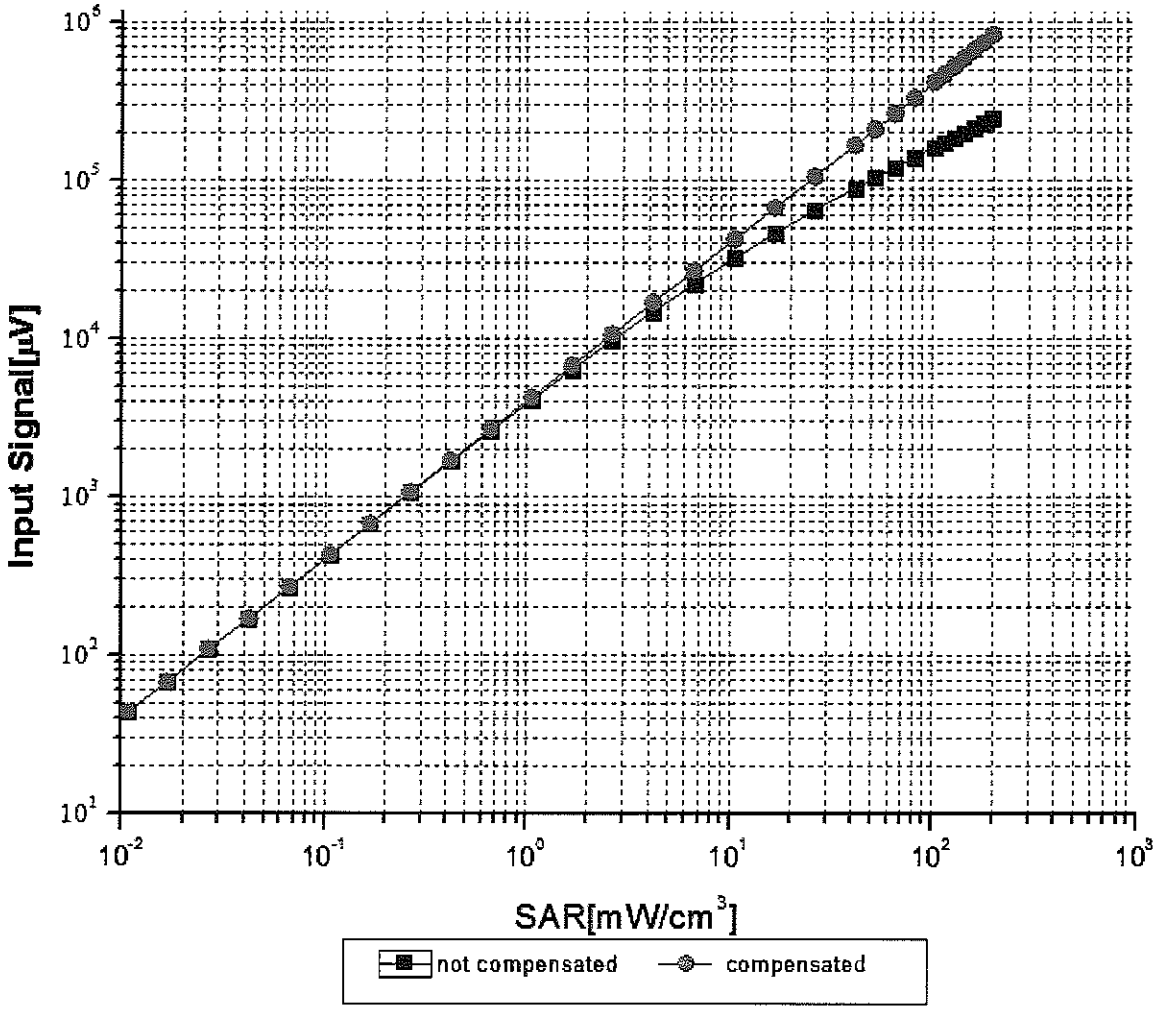


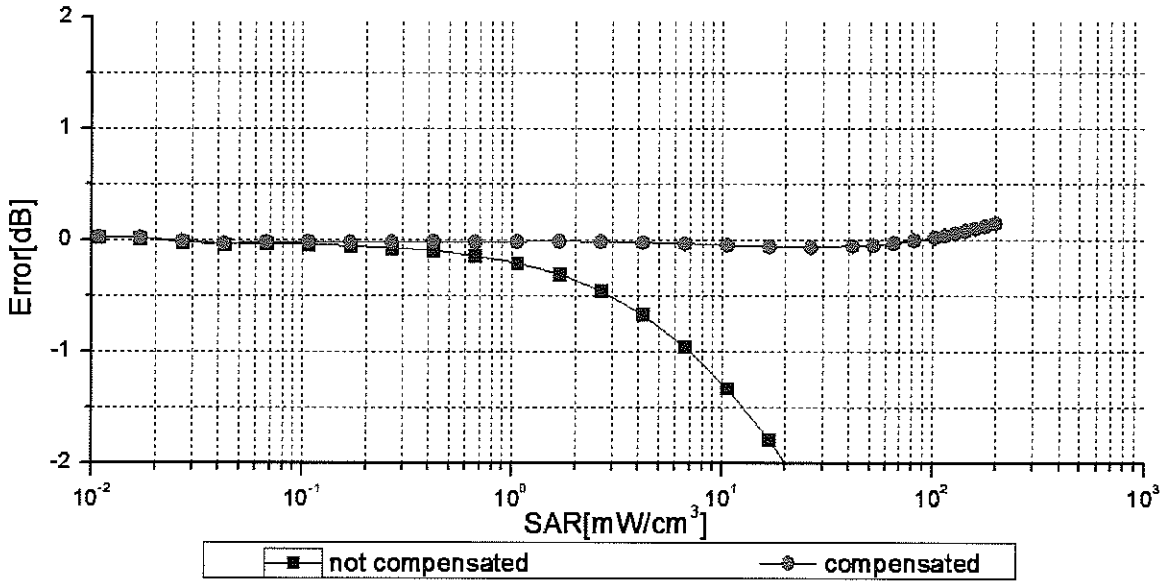


**Uncertainty of Linearity Assessment: ±0.9% (k=2)**

Add: No.51 Xueyuan Road, Haidian District, Beijing, 100191, China
Tel: +86-10-62304633-2512 Fax: +86-10-62304633-2504
E-mail: cttl@chinattl.com Http://www.chinattl.cn

# Conversion Factor Assessment

## f=750 MHz, WGLS R9(H_convF)

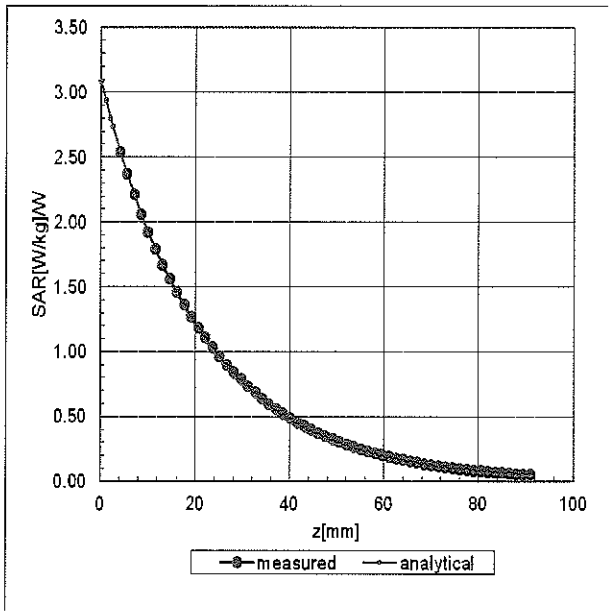


## f=1750 MHz, WGLS R22(H_convF)

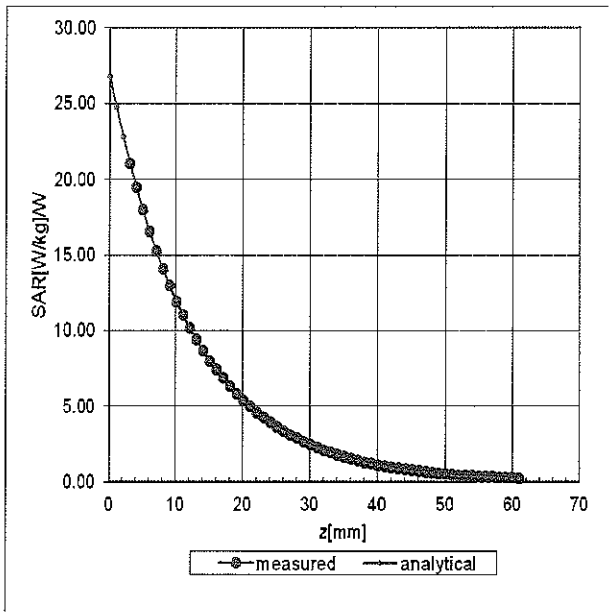


# Deviation from Isotropy in Liquid

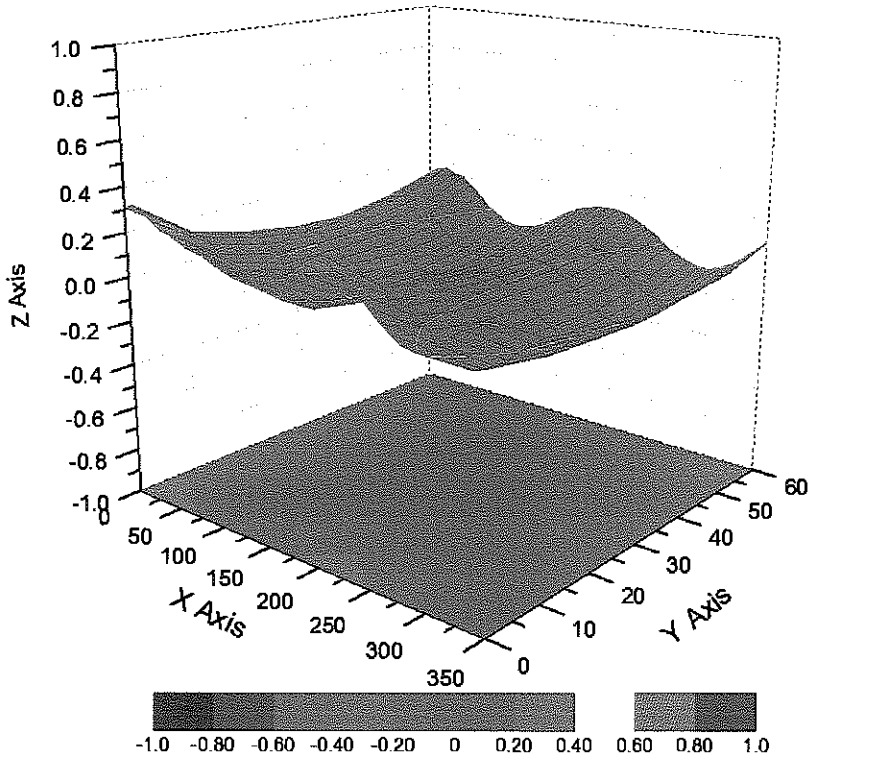


**Uncertainty of Spherical Isotropy Assessment: ±3.2% (K=2)**

In Collaboration with
s p e a g
CALIBRATION LABORATORY

Add: No.51 Xueyuan Road, Haidian District, Beijing, 100191, China
Tel: +86-10-62304633-2512 Fax: +86-10-62304633-2504
E-mail: cttl@chinattl.com Http://www.chinattl.cn

# DASY/EASY – Parameters of Probe: EX3DV4 – SN: 3923

## Other Probe Parameters

| | |
|---|---|
| Sensor Arrangement | Triangular |
| Connector Angle (°) | 25 |
| Mechanical Surface Detection Mode | enabled |
| Optical Surface Detection Mode | disable |
| Probe Overall Length | 337mm |
| Probe Body Diameter | 10mm |
| Tip Length | 9mm |
| Tip Diameter | 2.5mm |
| Probe Tip to Sensor X Calibration Point | 1mm |
| Probe Tip to Sensor Y Calibration Point | 1mm |
| Probe Tip to Sensor Z Calibration Point | 1mm |
| Recommended Measurement Distance from Surface | 1.4mm |

| Dipole D835V2 SN 4d105 | | | | |
|---|---|---|---|---|
| Head Liquid | | | | |
| Date of Measurement | Return Loss(dB) | Δ % | Impedance (Ω) | ΔΩ |
| 2016-12-08 | -29.1 | / | 49.2 | / |
| 2017-12-07 | -29.7 | 2.06% | 51.3 | 2.1Ω |
| 2018-12-06 | -29.5 | 1.03% | 50.6 | 1.4 |
| Body Liquid | | | | |
| Date of Measurement | Return Loss(dB) | Δ % | Impedance (Ω) | ΔΩ |
| 2016-12-08 | -25.1 | / | 45.8 | / |
| 2017-12-07 | -25.5 | 1.59% | 47.7 | 1.9Ω |
| 2018-12-06 | -25.3 | 0.80% | 46.6 | 0.8 |

| Dipole D1900V2 SN 5d028 | | | | |
|---|---|---|---|---|
| Head Liquid | | | | |
| Date of Measurement | Return Loss(dB) | Δ % | Impedance (Ω) | ΔΩ |
| 2016-12-07 | -24.4 | / | 51.8 | / |
| 2017-12-06 | -25.2 | 3.28% | 53.6 | 1.8Ω |
| 2018-12-05 | -24.8 | 1.64% | 52.8 | 1.0Ω |
| Body Liquid | | | | |
| Date of Measurement | Return Loss(dB) | Δ % | Impedance (Ω) | ΔΩ |
| 2016-12-07 | -24.1 | / | 48.1 | / |
| 2017-12-06 | -24.8 | 2.90% | 49.6 | 1.5Ω |
| 2018-12-05 | -25.1 | 4.15% | 50.3 | 2.2Ω |

| Dipole D2450V2 SN 733 | | | | |
|---|---|---|---|---|
| Head Liquid | | | | |
| Date of Measurement | Return Loss(dB) | Δ % | Impedance (Ω) | ΔΩ |
| 2016-12-07 | -26.3 | / | 52.9 | / |
| 2017-12-06 | -27.5 | 4.56% | 56.1 | 3.2Ω |
| 2018-12-05 | -27.1 | 3.04% | 55.7 | 2.8Ω |
| Body Liquid | | | | |
| Date of Measurement | Return Loss(dB) | Δ % | Impedance (Ω) | ΔΩ |
| 2016-12-07 | -24.6 | / | 49.7 | / |
| 2017-12-06 | -25.3 | 2.85% | 51.8 | 2.1Ω |
| 2018-12-05 | -25.1 | 2.03% | 52.1 | 2.4Ω |