HEARING AID COMPATIBILITY RF EMISSIONS TEST REPORT

FCC ID	:	2ACCJH180
Equipment	:	GSM/UMTS/LTE Mobile phone
Brand Name	:	TCL
Model Name	:	T510D, T510SP
WD Emission Result	:	PASS
Applicant	:	TCL Communication Ltd. 5/F, Building 22E, 22 Science Park East Avenue, Hong Kong Science Park, Shatin, NT, Hong Kong
Manufacturer	:	TCL Communication Ltd. 5/F, Building 22E, 22 Science Park East Avenue, Hong Kong Science Park, Shatin, NT, Hong Kong
Standard	:	FCC 47 CFR §20.19 ANSI C63.19-2019
Date Tested	:	Nov. 21, 2023

We, Sporton International Inc. (Kunshan), would like to declare that the tested sample provide by manufacturer and the test data has been evaluated in accordance with the test procedures given in ANSI C63.19-2019 / 47 CFR Part 20.19 and has been in compliance with the applicable technical standards.

The test results in this report apply exclusively to the tested model / sample. Without written approval of Sporton International Inc. (Kunshan), the test report shall not be reproduced except in full.

Si Zhang

Approved by: Si Zhang

ACCREDITED
Cert #5145.02

Sporton International Inc. (Kunshan)
No. 1098, Pengxi North Road, Kunshan Economic Development Zone Jiangsu Province 215300 People's Republic of China

Table of Contents

1. General Information 4
2. Testing Location 5
3. Applied Standards 5
4. Air Interfaces 6
5. WD Emission Requirements 7
6. System Description and Operation 8
7. RF Emissions Test Procedure 11
8. Test Equipment List 13
9. System Validation 14
10. Modulation Interference Factor 15
11. RF_{AIL} Test Results 16
12. Uncertainty Assessment 17
13. References 18

Appendix A. Plots of System Performance Check
Appendix B. Plots of RF Emission Measurement
Appendix C. DASY Calibration Certificate
Appendix D. Test Setup Photos
Appendix E. UID specifications for HAC RFE

History of this test report

Report No.	Version	Description	Issued Date
HA3O1004-01A	Rev. 01	Initial issue of report	Dec. 07, 2023

1. General Information

Product Feature & Specification	
Applicant Name	TCL Communication Ltd.
Equipment Name	GSM/UMTS/LTE Mobile phone
Brand Name	TCL
Model Name	T510D, T510SP
IMEI Code	016505000000125
FCC ID	2ACCJH180
HW	03
SW	9K3J
EUT Stage	Identical Prototype
Frequency Band	GSM850: 824 MHz ~ 849 MHz GSM1900: 1850 MHz ~ 1910 MHz WCDMA Band II: 1850 MHz ~ 1910 MHz WCDMA Band IV: 1710 MHz ~ 1755 MHz WCDMA Band V: 824 MHz ~ 849 MHz LTE Band 2: 1850 MHz ~ 1910 MHz LTE Band 4: 1710 MHz ~ 1755 MHz LTE Band 5: 824 MHz ~ 849 MHz LTE Band 7: 2500 MHz ~ 2570 MHz LTE Band 12: 699 MHz ~ 716 MHz LTE Band 13: 777 MHz ~ 787 MHz LTE Band 25: 1850 MHz ~ 1915 MHz LTE Band 26: 814 MHz ~ 849 MHz LTE Band 66: 1710 MHz ~ 1780 MHz LTE Band 71: 663 MHz ~ 698 MHz LTE Band 41: 2496 MHz ~ 2690 MHz WLAN 2.4GHz Band: 2412 MHz ~ 2462 MHz WLAN 5.2GHz Band: 5180 MHz ~ 5240 MHz WLAN 5.3GHz Band: 5260 MHz ~ 5320 MHz WLAN 5.5GHz Band: 5500 MHz ~ 5720 MHz WLAN 5.8GHz Band: 5745 MHz ~ 5825 MHz Bluetooth: 2402 MHz ~ 2480 MHz
Mode	GSM/GPRS/EGPRS AMR / RMC 12.2Kbps HSDPA HSUPA DC-HSDPA HSPA+ (16QAM uplink is supported) LTE: QPSK, 16QAM, 64QAM WLAN 2.4GHz : 802.11b/g/n HT20/ HT40 WLAN 5GHz : 802.11a/n/ac HT20/HT40/VHT20/VHT40/VHT80 Bluetooth BR/EDR/LE
Remark: This is a variant report for T510D, T510SP, for model change note, please refer to the T510D, T510SP_Operational Description of Product Equality Declaration exhibit submitted. Based on the similarity between two models, only the worst cases from original test report (Sporton Report Number HA3O1004A) were verified for the differences.	

2. Testing Location

Sporton International Inc. (Kunshan) is accredited to ISO/IEC 17025:2017 by American Association for Laboratory Accreditation with Certificate Number 5145.02.

Testing Laboratory			
Test Firm	Sporton International Inc. (Kunshan)		
Test Site Location	No. 1098, Pengxi North Road, Kunshan Economic Development Zone Jiangsu Province 215300 People's Republic of China TEL : +86-512-57900158		
Test Site No.	Sporton Site No.	FCC Designation No.	FCC Test Firm Registration No.
	SAR05-KS	CN1257	314309

3. Applied Standards

- FCC CFR47 Part 20.19
- ANSI C63.19-2019
- FCC KDB 285076 D01 HAC Guidance v06r04
- FCC KDB 285076 D03 HAC FAQ v01r06

4. Air Interfaces

Air Interface	Band MHz	Type	C63.19 RF_{AIL} Tested	Simultaneous Transmitter	Name of Voice Service	Power Reduction
GSM	GSM850	VO	Yes	WLAN, BT	CMRS Voice	No
	GSM1900			WLAN, BT		No
	EDGE850	VD	Yes	WLAN, BT	Google Meet	No
	EDGE1900			WLAN, BT		
WCDMA	Band II	VO	No(1)	WLAN, BT	CMRS Voice	No
	Band IV			WLAN, BT		No
	Band V			WLAN, BT		No
	HSPA	VD	No(1)	WLAN, BT	Google Meet	No
LTE FDD	Band 2	VD	No(1)	WLAN, BT	VoLTE / Google Meet	No
	Band 4			WLAN, BT		No
	Band 5			WLAN, BT		No
	Band 7			WLAN, BT		No
	Band 12			WLAN, BT		No
	Band 13			WLAN, BT		No
	Band 25			WLAN, BT		No
	Band 26			WLAN, BT		No
	Band 66			WLAN, BT		No
	Band 71			WLAN, BT		No
LTE TDD	Band 41	VD	Yes	WLAN, BT	VoLTE/ Google Meet	No
Wi-Fi	2450	VD	No(1)	GSM, WCDMA, LTE,	VoWiFi / Google Meet	No
	5200			GSM, WCDMA, LTE		No
	5300			GSM, WCDMA, LTE,		No
	5500			GSM, WCDMA, LTE		No
	5800			GSM, WCDMA, LTE,		No
BT	2450	DT	No	GSM, WCDMA, LTE	NA	No

Type Transport:
VO= Voice only
DT= Digital Transport only (no voice)
VD= CMRS and IP Voice Service over Digital Transport

Remark:
1. The air interface max power plus MIF is complies with ANSI C63.19-2019 Table 4.1 RF_{AIPL}
2. Because features of Google Meet allow the option of voice-only communications, Meet has been tested for HAC/T-Coil compatibility to ensure the best user experience.
3. There are two samples, the difference between them is battery: sample 1 is 1st battery and sample 2 is 2nd source battery. They are only supplier different, so sample 1 was chosen to perform full test only.

5. WD Emission Requirements

The WD's conducted power must be at or below either the stated RFAIPL (Table 4.1) or the stated peak power level (Table 4.2), or the average near-field emissions over the measurement area must be at or below the stated RFAIL (Table 4.3), or the stated peak field strength (Table 4.4). The WD may demonstrate compliance by meeting any of these four requirements, but it must do so in each of its operating bands at its established worst-case normal speech-mode operating condition.

Table 4.1 - Wireless device RF audio interference power level	
Frequency range (MHz)	RF_{AIPL} (dBm)
< 960	29
960 - 2000	26
> 2000	25

Table 4.2 - Wireless device RF peak power level	
Frequency range (MHz)	$RF_{Peak\ Power}$ (dBm)
< 960	35
960 - 2000	32
> 2000	31

Table 4.3 - Wireless device RF audio interference level	
Frequency range (MHz)	RF_{AIL} [dB(V/m)]
< 960	39
960 - 2000	36
> 2000	35

Table 4.4 - Wireless device RF peak near-field level	
Frequency range (MHz)	RF_{Peak} [dB(V/m)]
< 960	45
960 - 2000	42
> 2000	41

6. System Description and Operation

<System Components>

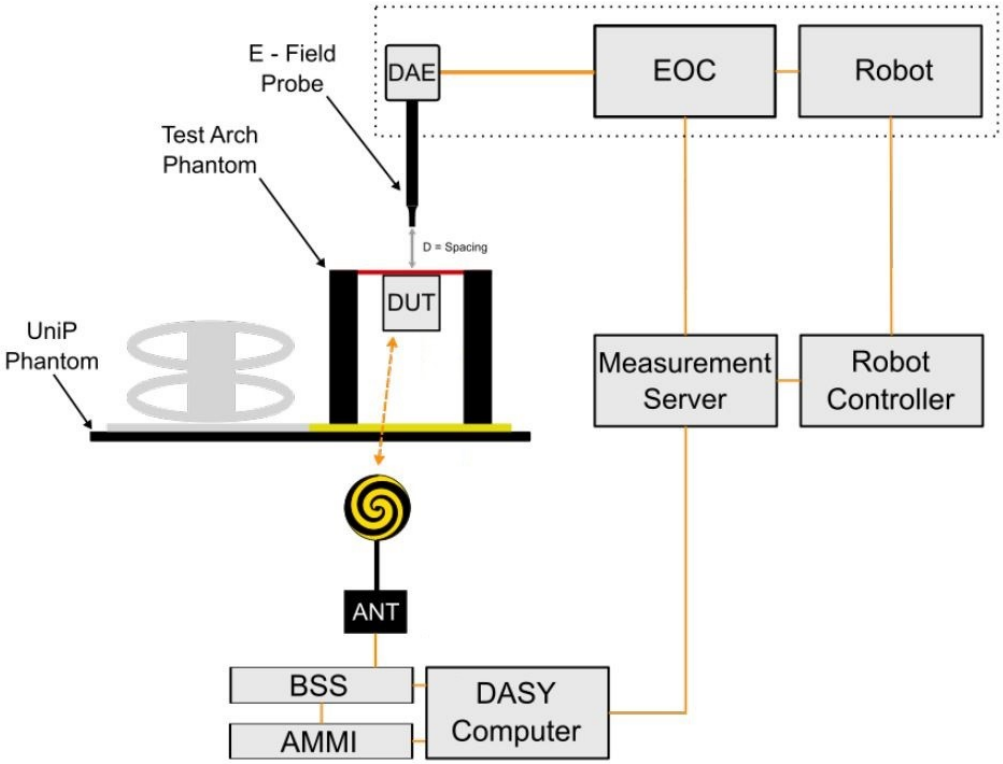

Remark:

A typical al DASY system for HAC measurements consists of

- 6-axis robotic arm (Staubli TX2-60L/ TX2-90XL) for positioning the probe
- Mounting Platform for keeping the phantoms at a field location relative to the robot
- Measurement Server for handling all time-critical tasks, such as measurement data acquisition and supervision of safety features
- EOC (Electrical to Optical Converter) for converting the optical signal from the Data Acquisition Electronics (DAE) to electrical before being transmitted to the measurement server
- LB (Light Beam unit) for probe alignment (measurement of the exact probe length and eccentricity)
- Test Arch for Device Under Test (DUT) testing
- DAE that reads the probe voltages and transmits them to the DASY PC. It is also used to detect probe touch and collision signals
- Device Holder for positioning the DUT beneath the phantom
- ANT (wideband Antenna) for broadcasting the downlink signals emitted by base station simulators (BSS) to the WD
- Operator PC for running the DASY software to define/execute the measurements.

The following components are needed for RFail measurements only:

- Modulation Interference Factor (MIF)
- Isotropic E-field, free-space probe (e.g., EF3DVx)
- Radiofrequency (RF) emission calibration dipoles for system check / validation purposes.

<EF3DV3 E-Field Probe Specification>

Construction	One dipole parallel, two dipoles normal to probe axis Interleaved sensors Built-in shielding against static charges PEEK enclosure material
Calibration	In air from 30 MHz to 6.0 GHz (absolute accuracy ±5.1%, k=2)
Frequency	30 MHz – 6 GHz Linearity: ±0.2 dB (100 MHz – 3 GHz)
Directivity	± 0.2 dB in air (rotation around probe axis) ± 0.4 dB in air (rotation normal to probe axis)
Dynamic Range	2 – >1000 V/m
Linearity	± 0.2 dB
Dimensions	Overall length: 337 mm (tip: 20 mm) Tip diameter: 3.9 mm (body: 12 mm) Distance from probe tip to dipole centers: 1.5 mm Sensor displacement to probe's calibration point: <0.7 mm

Voltage to E-field Conversion

The measured voltage is first linearized to a quantity proportional to the square of the E-field using the (a, b, c, d) set of parameters specific to the communication system and sensor :

$$\mathbf{V_{compi} = U_i + U_i^2 \cdot \frac{10^{\frac{d}{10}}}{dcp_i}}$$

where V_{compi} = compensated signal of channel i (μV) (i = x, y, z)
U_i = input signal of channel i (μV) (i = x, y, z)
d = PMR factor d (dB) (Probe parameter)
dcp_i = diode compression point of channel i (μV) (Probe parameter, i = x, y, z)

$$\mathbf{V_{compi\,dB\sqrt{\mu V}} = 10 + \log_{10}(V_{compi})}$$

$$\mathbf{corr_i = a_i \cdot e - \left(\frac{V_{compi\,dB\sqrt{\mu V}} - b_i}{C_i}\right)^2}$$

where $coor_i$ = correction factor of channel i (dB) (i = x, y, z)
$V_{compi\ dB\sqrt{\mu V}}$ = compensated voltage of channel i (dB√μV) (i = x, y, z)
a_i = PMR factor a of channel i (dB) (Probe parameter, i = x,y,z)
b_i = PMR factor b of channel i (dB√μV) (Probe parameter, i = x,y,z)
c_i = PMR factor c of channel i (Probe parameter, i = x,y,z)

The voltage $V_{idB\sqrt{\mu V}}$ is the linearized voltage in dB√μV :

$$\mathbf{V_{i\,dB\sqrt{\mu V}} = V_{compi\,dB\sqrt{\mu V}} - corr_i}$$

where $V_{i\ dB\sqrt{\mu V}}$ = linearized voltage of channel i (dB√μV) (i = x,y,z)
$V_{compi\ dB\sqrt{\mu V}}$ = compensated voltage of channel i (dB√μV) (i = x,y,z)
$Corr_i$ = correction factor of channel i (dB) (i = x,y,z)

Finally, the linearized voltage is converted in μV :

$$\mathbf{V_i = 10^{\frac{V_{i\,dB\sqrt{\mu V}}}{10}}}$$

where V_i = linearized voltage of channel i (μV) (i = x,y,z)
$V_{i\ dB\sqrt{\mu V}}$ = linearized voltage of channel i (dB√μV (i = x,y,z)

The E-field data for each channel are calculated using the linearized voltage :

$$\text{E-field Probes}: \mathbf{E_i = \sqrt{\frac{V_i}{Norm_i \cdot ConvF}}}$$

where V_i = compensated signal of channel i, (i = x, y, z)
$Norm_i$ = sensor sensitivity (μV/(V/m)^2 of channel i (i = x, y, z)
ConvF = sensitivity enhancement in solution
E_i = electric field strength of channel i in V/m

The RMS value of the field components gives the total field strength (Hermitian magnitude) :

$$\mathbf{E_{tot} = \sqrt{E_x^2 + E_y^2 + E_z^2}}$$

Averaged E-field Calculation

The averaged E-field is defined by

$$\mathbf{E_{avg} = \frac{1}{n} \cdot \sum_{i=1}^{n} E_i}$$

where n = = the number of measurement grid point
E_i = the E-field measured at point i

RFail Calculation

The RFail is finally computed with

$$\boldsymbol{RFail[dB(V/m)] = 20 \cdot \log_{10}(E_{avg}) + MIF}$$

where RFail = the Radio Frequency Audio Interference Level in dB(V/m)
E_{avg} = the averaged E-field in (V/m) calculated
MIF = the Modulation Interference Factor in dB.

7. RF Emissions Test Procedure

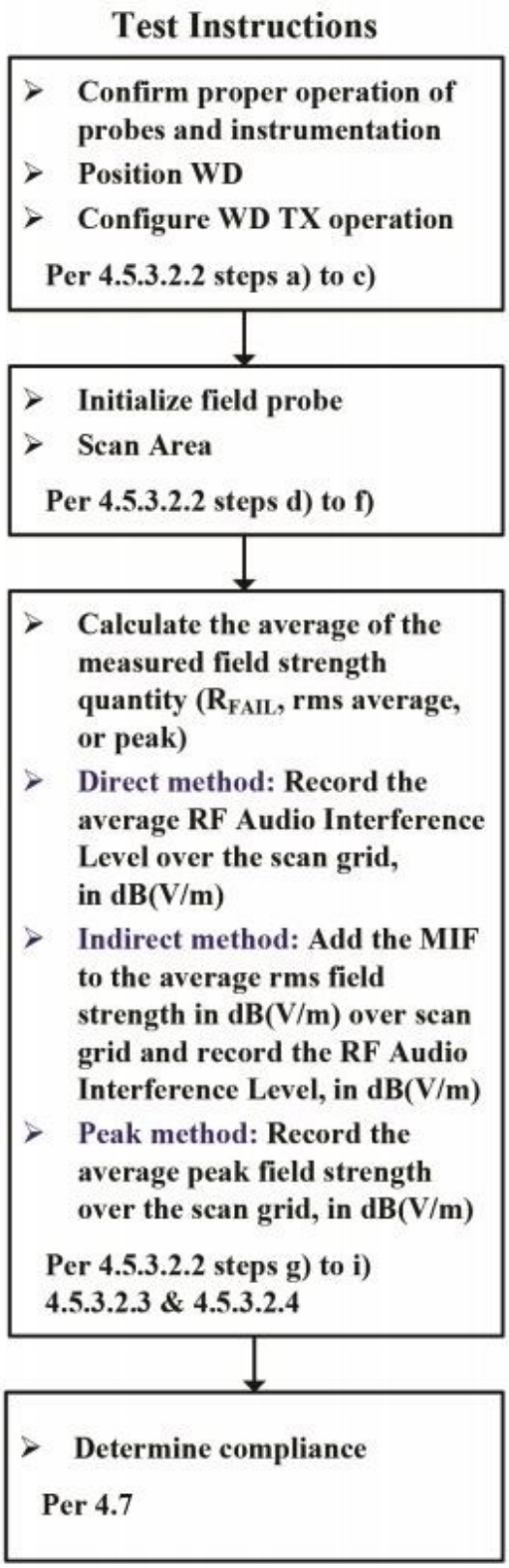

Figure of WD near-field emission scan flowchart according to ANSI C63.19:2019

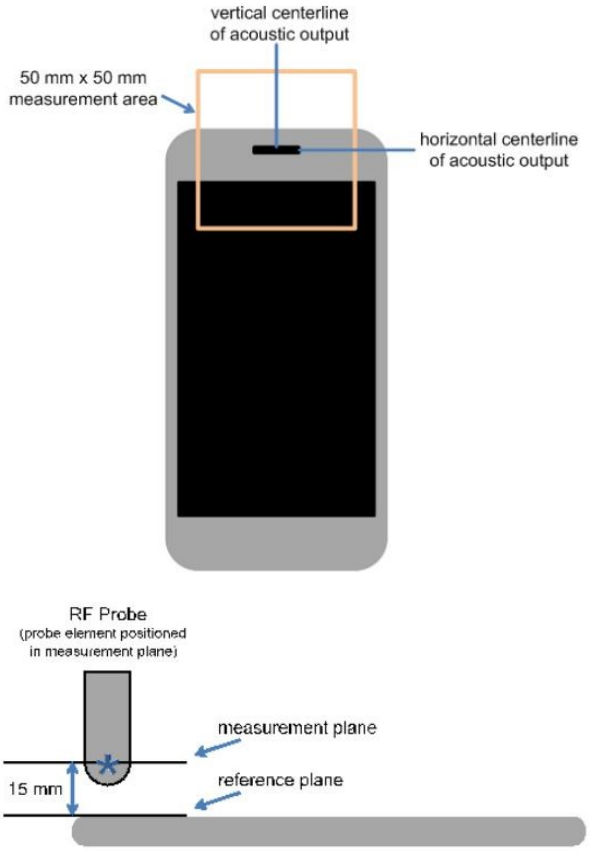

The references and reference plane that shall be used in the WD emissions measurement

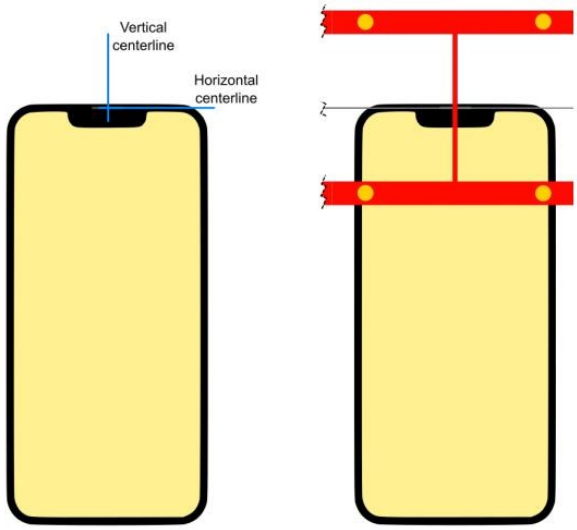

Device Under Test Positioning under the Test Arch

Test procedure: Indirect measurement—preferred

a. The measurement procedure using a probe and instrumentation chain with a response of <10 kHz (see ANSI C63.19-2019 section4.5.1) is identical to the direct measurement method of ANSI C63.19-2019 section4.5.3.2.2: however, because of the bandwidth limitations, it cannot include the direct use of the spectral and temporal weighting functions. The output of such measurement systems must be readings of steady state rms field strength in dB(V/m).

b. The RF audio interference level in dB(V/m) is obtained by adding the Modulation Interference Factor (in decibels) to the average steady state rms field strength reading over the measurement area, in dB(V/m), from Step c). Use this result to determine the WD's compliance per ANSI C63.19-2019 section4.7.

c. Scan the entire 50 mm by 50 mm measurement area in equally spaced step sizes and record the reading at each measurement point. The step size shall meet the specification for step size in ANSI C63.19:2019 section 4.5.3.

d. Calculate the average of the measurements taken in Step c

e. Convert the average value found in Step d) to RF audio interference level, in volts per meter, by taking the square root of the reading and then dividing it by the measurement system transfer function, as established in ANSI C63.19:2019 section4.5.3.2.1 pre-test procedure. Convert the result to dB(V/m) by taking the base-10 logarithm and multiplying it by 20. Expressed as a formula

   RF audio interference level in db(V/M) $20 * \log(R_{ave}^{1/2} / TF)$

   where

   R_{ave} is the average reading

f. Compare this RF audio interference level to the limits in ANSI C63.19:2019 section4.7 and record the result

g. Per ANSI C63.19-2019 section4.6, WDs capable of operating multiple transmitters shall be subject to emissions requirements for all such transmitters expected to be operated when the WD is in voice mode operation positioned at a user's ear. Each qualified transmitter is tested individually using the method of Clause 4. Other WD transmitters shall be temporarily disabled or reduced in power level such that their average antenna input power is at least 6 dB lower than the average antenna input power of the transmitter under test. The transmitter under test is set to the fixed and repeatable combination of power and modulation characteristic that is representative of the worst case (highest interference potential) likely to be encountered while the WD is experiencing normal voice mode operation. The limiting measurement for device qualification is the highest RF audio interference potential measured for any of the WD transmitters. If the highest interference measurement is from a transmitter that is not required for normal voice mode operation, a secondary rating may be given that applies when that transmitter is disabled

8. Test Equipment List

Manufacturer	Name of Equipment	Type/Model	Serial Number	Calibration	
				Last Cal.	Due Date
SPEAG	835MHz Calibration Dipole	CD835V3	1171	2022/3/1	2025/2/26
SPEAG	1880MHz Calibration Dipole	CD1880V3	1155	2022/3/1	2025/2/26
SPEAG	2600Mhz Calibration Dipole	CD2600V3	1030	2022/6/29	2025/6/26
SPEAG	Data Acquisition Electronics	DAE4	1691	2022/12/12	2023/12/11
SPEAG	Isotropic E-Field Probe	EF3DV3	4050	2023/1/24	2024/1/23
SPEAG	Test Arch Phantom	N/A	N/A	NCR	NCR
SPEAG	Phone Positioner	N/A	N/A	NCR	NCR
R&S	Base Station	CMW500	143030	2023/7/5	2024/7/4
Anritsu	Vector Signal Generator	MG3710A	6201682672	2023/1/5	2024/1/4
BONN	POWER AMPLIFIER	BLMA 0830-3	087193A	NA	NA
BONN	POWER AMPLIFIER	BLMA 2060-2	087193B	NA	NA
Rohde & Schwarz	Power Meter	NRVD	102081	2023/7/5	2024/7/4
Rohde & Schwarz	Power Sensor	NRV-Z5	100538	2023/7/5	2024/7/4
Rohde & Schwarz	Power Sensor	NRV-Z5	100539	2023/7/5	2024/7/4
MCL	Attenuation1	BW-S10W5+	N/A	NCR	NCR
MCL	Attenuation2	BW-S10W5+	N/A	NCR	NCR
MCL	Attenuation3	BW-S10W5+	N/A	NCR	NCR
R&S	Base Station	CMW500	143030	2023/7/5	2024/7/4
Rohde & Schwarz	Spectrum Analyzer	FSV7	101631	2023/10/11	2024/10/10
Agilent	Dual Directional Coupler	778D	20500	2023/7/5	2024/7/4
Agilent	Dual Directional Coupler	11691D	MY48151020	2023/7/5	2024/7/4
Testo	Thermo-Hygrometer	608-H1	1241332126	2023/1/5	2024/1/4

Note:
1. NCR: “No-Calibration Required”
2. The dipole calibration interval can be extended to 3 years with justification. The dipoles are also not physically damaged, or repaired during the interval. The justification data in appendix C can be found which the return loss is < -20dB, within 20% of prior calibration, the impedance is within 5 ohm of prior calibration for each dipole.

9. System Validation

Obtaining accurate measurements and relevant quantities in Module HAC depends on the proper functioning of many components and the correct parameter settings. Faulty results due to drift, failures, or incorrect parameters might not be recognized, as the differences might not be obvious in the measurements.
SPEAG DASY incorporates a system check, also called system verification procedure, to test for the proper functioning of the system based on the tests described in ANSI C63.19-2019: the RF interference potential test setup is verified with RF Emission Calibration Dipoles.

<Test Setup>

1. Set the RF signal generator for either CW. Set its output power so the peak power applied to the antenna is equal to that recorded for the real or emulated signal using the WD modulation format
2. Average input power P = 100 mW (20 dBm) after adjustment for return loss. An input power that generates field levels similar to those from the WD or other suitable level may also be used
3. The test fixture should meet the two-wavelength separation criterion
4. The probe-to-dipole separation, which is measured from closest surface of the dipole to the center point of the probe sensor element, should be 15 mm

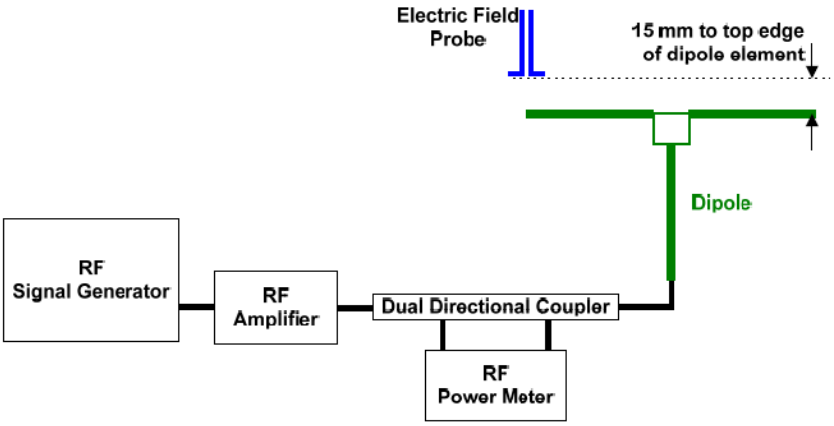

Figure of Setup Diagram

<Validation Procedure>

Place a dipole antenna meeting the requirements given in ANSI C63.19: 2019 D.11 in the position normally occupied by the WD. The dipole antenna serves as a known source for an electrical and magnetic output. Position the E-field probe so that:

a. The probe and its cable are parallel to the coaxial feed of the dipole antenna
b. The probe cable and the coaxial feed of the dipole antenna approach the measurement area from opposite directions; and
c. The center point of the probe element(s) is 15 mm from the closest surface of the dipole elements

Scan the length of the dipole with the E-field probe and record the two maximum values found near the dipole ends. Average the two readings and compare the reading to expected value in the calibration certificate or expected value in this standard.

Frequency (MHz)	Input Power (dBm)	Target Value (V/m)	Emax (V/m)	Deviation (%)	Date
835	20	107.7	114	5.85%	2023/11/21
1880	20	85.1	91.7	7.76%	2023/11/21
2600	20	86	88.2	2.56%	2023/11/21

10. Modulation Interference Factor

For any specific fixed and repeatable modulated signal, a Modulation Interference Factor (MIF, expressed in decibels) may be developed that relates its interference potential to its steady state rms signal level or average power level. This factor is a function only of the audio frequency amplitude modulation characteristics of the signal and is the same for field strength or conducted power measurements. It is important to emphasize that the MIF is valid only for a specific repeatable audio frequency amplitude modulation characteristic. Any change in modulation characteristic requires determination and application of a new MIF.
MIF may be determined using a radiated RF field, a conducted RF signal, or, in a preliminary stage, a mathematical analysis of a modeled RF signal.

a. Verify the slope accuracy and dynamic range capability over the desired operating frequency band of a fast probe or sensor, square-law detector, as specified in ANSI C63.19: 2019 D.3, and weighting system as specified in ANSI C63.19: 2019 D.4 and ANSI C63.19: 2019 D.5. For the probe and instrumentation included in the measurement of MIF, additional calibration and application of calibration factors are not required.
b. Using RF illumination, or conducted coupling, apply the specific modulated signal in question to the measurement system at a level within its confirmed operating dynamic range
c. Measure the steady-state rms level at the output of the fast probe or sensor
d. Measure the steady-state average level at the weighting output
e. Without changing the square-law detector or weighting system, and using RF illumination, or conducted coupling, substitute for the specific modulated signal a 1 kHz, 80% amplitude modulated carrier at the same frequency and adjust its strength until the level at the weighting output equals the Step d) measurement
f. Without changing the carrier level from Step e), remove the 1 kHz modulation and again measure the steady-state rms level indicated at the output of the fast probe or sensor.
g. The MIF for the specific modulation characteristic is given by the ratio of the Step f) measurement to the Step c) measurement, expressed in decibels (20*log(step6/step3)

In practice, Step e) and Step f) need not be repeated for each MIF determination if the relationship between the two measurements has been pre-established for the measurement system over the operating frequency and dynamic ranges. In such cases, only the modulation characteristic being tested needs to be available during WD testing
Since indirect measurement procedure was using for RF audio interference power level evaluation, the MIF values applied in this test report were provided by the HAC equipment provider of SPEAG, and the worst values for all air interface are listed below to be determine the Wireless device RF audio interference power level.

UID	Communication System Name	MIF(dB)
10021	GSM-FDD(TDMA,GMSK)	3.63
10025	EDGE-FDD (TDMA, 8PSK, TN 0)	3.75
10460	UMTS-FDD(WCDMA, AMR)	-25.43
10225	UMTS-FDD (HSPA+)	-20.39
10170	LTE-FDD(SC-FDMA,1RB,20MHz,16-QAM)	-9.76
10173	LTE-TDD (SC-FDMA, 1 RB, 20 MHz, 16-QAM)	-1.44
10769	5G NR (CP-OFDM, 1 RB, 15 MHz, QPSK, 15 kHz)	-12.08
10061	IEEE 802.11b WiFi 2.4 GHz (DSSS, 11 Mbps)	-2.02
10077	IEEE 802.11g WiFi 2.4 GHz (DSSS/OFDM, 54 Mbps)	0.12
10427	IEEE 802.11n (HT Greeneld, 150 Mbps, 64-QAM)	-13.44
10069	IEEE 802.11a/h WiFi 5 GHz (OFDM, 54 Mbps)	-3.15
10616	IEEE 802.11ac WiFi (40MHz, MCS0, 90pc duty cycle)	-5.57
10671	IEEE 802.11ax (20MHz, MCS0, 90pc duty cycle)	-5.58

11. RF_{AIL} Test Results

Plot No.	Air Interface	Modulation / Mode	Channel	Transmit Ant.	Average Antenna Input Power (dBm)	MIF	RFAIL (dBV/m)
1	GSM850	GSM Voice	251	Ant 1	32.72	3.63	31.42
2	GSM1900	GSM Voice	810	Ant 1	29.73	3.63	24.06
3	LTE Band 41_HPUE	20M_QPSK_1_0	40620	Ant 1	25.42	-1.44	22.27

Test Engineer : Martin Li, Varus Wang, Light Wang

12. Uncertainty Assessment

The component of uncertainly may generally be categorized according to the methods used to evaluate them. The evaluation of uncertainly by the statistical analysis of a series of observations is termed a Type A evaluation of uncertainty. The evaluation of uncertainty by means other than the statistical analysis of a series of observation is termed a Type B evaluation of uncertainty. Each component of uncertainty, however evaluated, is represented by an estimated standard deviation, termed standard uncertainty, which is determined by the positive square root of the estimated variance.
The combined standard uncertainty of the measurement result represents the estimated standard deviation of the result. It is obtained by combining the individual standard uncertainties of both Type A and Type B evaluation using the usual "root-sum-squares" (RSS) methods of combining standard deviations by taking the positive square root of the estimated variances. Expanded uncertainty is a measure of uncertainty that defines an interval about the measurement result within which the measured value is confidently believed to lie. It is obtained by multiplying the combined standard uncertainty by a coverage factor. For purpose of this document, a coverage factor two is used, which corresponds to confidence interval of about 95 %. The DASY uncertainty Budget is showed below Table.
The judgment of conformity in the report is based on the measurement results excluding the measurement uncertainty.

Error Description	Uncertainty Value (±%)	Probability Distribution	Divisor	Ci (Eav)	Standard Uncertainty (E) (±%)
Measurement System					
Probe Calibration	5.1	Normal	1	1	5.1
Axial Isotropy	4.7	Rectangular	√3	1	2.7
Sensor Displacement	7.2	Rectangular	√3	0.5	2.1
Boundary Effects	2.4	Rectangular	√3	1	1.4
Phantom Boundary Effects	7.2	Rectangular	√3	1	4.2
Linearity	4.7	Rectangular	√3	1	2.7
Scaling with PMR Calibration	10.0	Rectangular	√3	1	5.8
System Detection Limit	1.0	Rectangular	√3	1	0.6
Readout Electronics	0.3	Normal	1	1	0.3
Response Time	0.8	Rectangular	√3	0	0.0
Integration Time	2.6	Rectangular	√3	0	0.0
RF Ambient Conditions	3.0	Rectangular	√3	1	1.7
RF Reflections	12.0	Rectangular	√3	1	6.9
Probe Positioner	1.2	Rectangular	√3	1	0.7
Probe Positioning	3.0	Rectangular	√3	1	1.7
Extrap. and Interpolation	1.0	Rectangular	√3	1	0.6
Test Sample Related					
Device Positioning Vertical	4.7	Rectangular	√3	1	2.7
Device Positioning Lateral	1.0	Rectangular	√3	1	0.6
Device Holder and Phantom	2.4	Rectangular	√3	1	1.4
Power Drift	5.0	Rectangular	√3	1	2.9
Phantom and Setup Related					
Phantom Thickness	2.4	Rectangular	√3	1	1.4
Combined Std. Uncertainty					13.1%
Coverage Factor for 95 %					K=2
Expanded STD Uncertainty					26.3%
Declaration of Conformity: The test results with all measurement uncertainty excluded are presented in accordance with the regulation limits or requirements declared by manufacturers.					
Comments and Explanations: The declared of product specification for EUT presented in the report are provided by the manufacturer, and the manufacturer takes all the responsibilities for the accuracy of product specification.					

Uncertainty Budget of HAC free field assessment

13. References

[1] ANSI C63.19:2019, “American National Standard for Methods of Measurement of Compatibility between Wireless Communications Devices and Hearing Aids”, Aug. 2019.

[2] FCC KDB 285076 D01v06r04, “Equipment Authorization Guidance for Hearing Aid Compatibility”, Sep 2023.

[3] FCC KDB 285076 D03v01r06, “Hearing aid compatibility frequently asked questions”, Jul. 2022

[4] SPEAG DASY System Handbook