ANNEX C SYSTEM VALIDATION RESULT

E SCAN of Dipole 835 MHz
Date: 2016-11-3
Electronics: DAE4 Sn777
Medium: Air
Medium parameters used: σ = 0 mho/m, εr = 1; ρ = 1000 kg/m3
Communication System: CW; Frequency: 835 MHz; Duty Cycle: 1:1
Probe: ER3DV6 - SN2272;ConvF(1, 1, 1)
E Scan - measurement distance from the probe sensor center to CD835 Dipole = 15mm/Hearing Aid Compatibility Test (41x361x1): Interpolated grid: dx=0.5000 mm, dy=0.5000 mm
Device Reference Point: 0, 0, -6.3 mm
Reference Value = 107.52 V/m; Power Drift = 0.08 dB
Applied MIF = 0.00 dB
RF audio interference level = 40.63dBV/m
Emission category: M3

MIF scaled E-field

Grid 1**M3** **40.43dBV/m**	Grid 2**M3** **40.63 dBV/m**	Grid 3**M3** **40.49 dBV/m**
Grid 4 **M4** **35.61dBV/m**	Grid 5 **M4** **35.93dBV/m**	Grid 6 **M4** **35.92 dBV/m**
Grid 7 **M3** **40.04dBV/m**	Grid 8 **M3** **40.34dBV/m**	Grid 9 **M3** **40.27dBV/m**

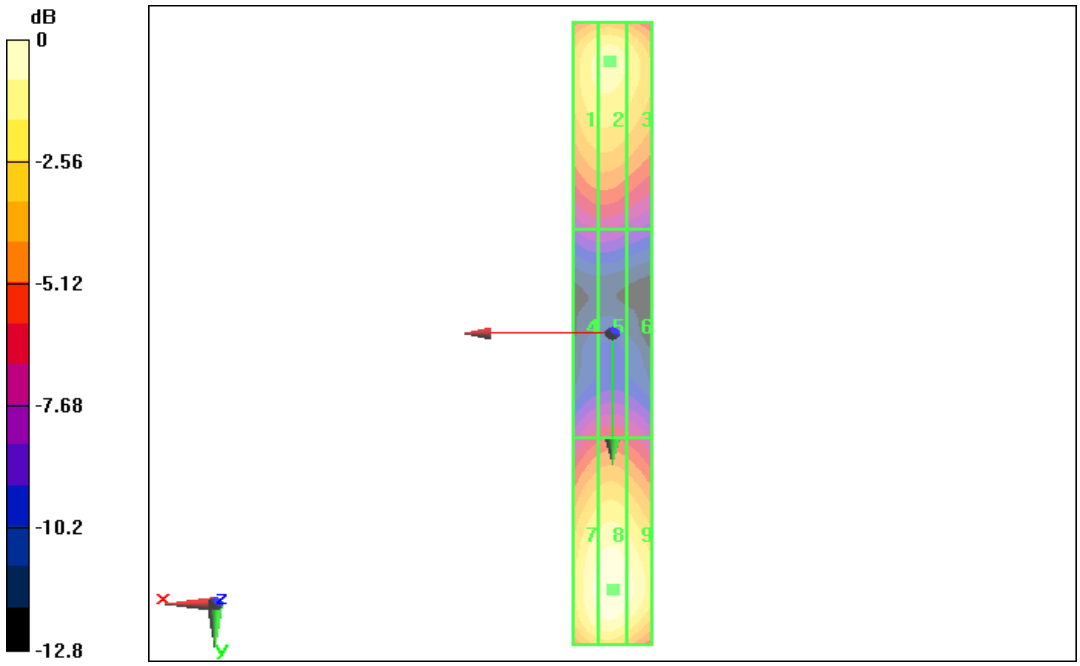

0 dB = 40.63 dBV/m

©Copyright. All rights reserved by CTTL.

E SCAN of Dipole 1880 MHz
Date: 2016-11-3
Electronics: DAE4 Sn777
Medium: Air
Medium parameters used: $\sigma = 0$ mho/m, $\varepsilon_r = 1$; $\rho = 1000$ kg/m^3
Communication System: CW; Frequency: 1880 MHz; Duty Cycle: 1:1
Probe: ER3DV6 - SN2272;ConvF(1, 1, 1)
E Scan - measurement distance from the probe sensor center to CD1880 Dipole = 15mm/Hearing Aid Compatibility Test (41x181x1): Interpolated grid: dx=0.5000 mm, dy=0.5000 mm
Device Reference Point: 0, 0, -6.3 mm
Reference Value = 92.36 V/m; Power Drift = -0.03 dB
Applied MIF = 0.00 dB
RF audio interference level = 39.31dBV/m
Emission category: M2

MIF scaled E-field

Grid 1**M2** **39.08dBV/m**	Grid 2**M2** **39.31dBV/m**	Grid 3**M2** **39.18dBV/m**
Grid 4**M2** **36.74dBV/m**	Grid 5**M2** **36.93dBV/m**	Grid 6**M2** **36.85dBV/m**
Grid 7**M2** **39.11dBV/m**	Grid 8**M2** **39.25 dBV/m**	Grid 9**M2** **39.14dBV/m**

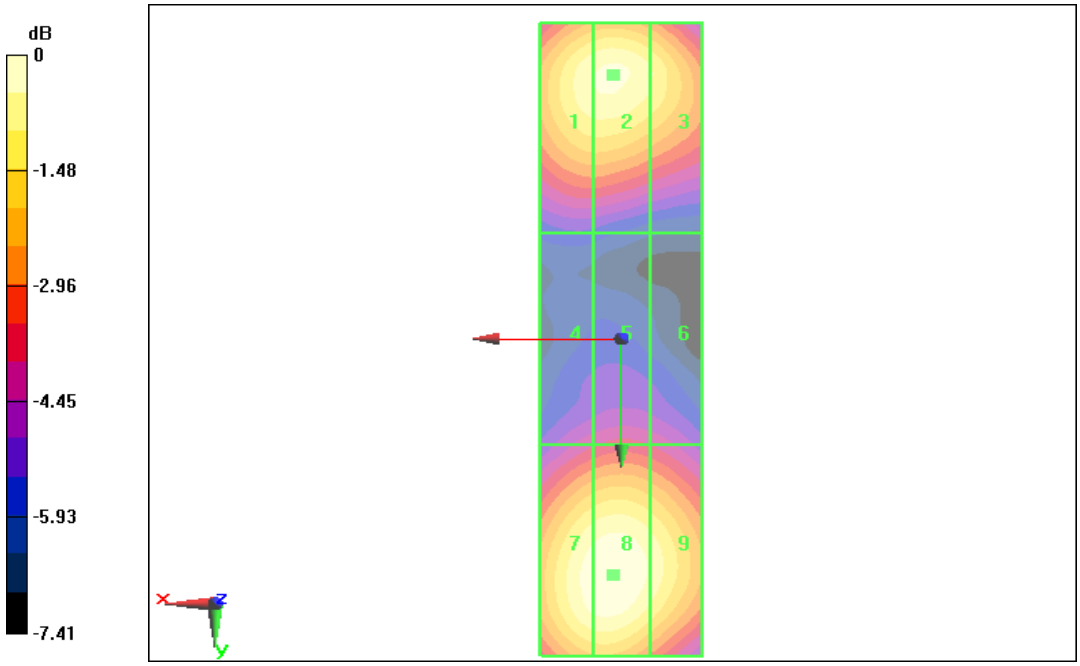

0 dB = 39.31 dBV/m

©Copyright. All rights reserved by CTTL.

ANNEX D PROBE CALIBRATION CERTIFICATE

E_Probe ER3DV6

Calibration Laboratory of
Schmid & Partner
Engineering AG
Zeughausstrasse 43, 8004 Zurich, Switzerland

S Schweizerischer Kalibrierdienst
C Service suisse d'étalonnage
Servizio svizzero di taratura
S Swiss Calibration Service

Accredited by the Swiss Accreditation Service (SAS)
The Swiss Accreditation Service is one of the signatories to the EA Multilateral Agreement for the recognition of calibration certificates

Accreditation No.: SCS 0108

Client CTTL (Auden)

Certificate No: ER3-2272_Jan16

CALIBRATION CERTIFICATE

Object	ER3DV6 - SN:2272
Calibration procedure(s)	QA CAL-02.v8, QA CAL-25.v6 Calibration procedure for E-field probes optimized for close near field evaluations in air
Calibration date:	January 19, 2016

This calibration certificate documents the traceability to national standards, which realize the physical units of measurements (SI).
The measurements and the uncertainties with confidence probability are given on the following pages and are part of the certificate.

All calibrations have been conducted in the closed laboratory facility: environment temperature (22 ± 3)°C and humidity < 70%.

Calibration Equipment used (M&TE critical for calibration)

Primary Standards	ID	Cal Date (Certificate No.)	Scheduled Calibration
Power meter E4419B	GB41293874	01-Apr-15 (No. 217-02128)	Mar-16
Power sensor E4412A	MY41498087	01-Apr-15 (No. 217-02128)	Mar-16
Reference 3 dB Attenuator	SN: S5054 (3c)	01-Apr-15 (No. 217-02129)	Mar-16
Reference 20 dB Attenuator	SN: S5277 (20x)	01-Apr-15 (No. 217-02132)	Mar-16
Reference 30 dB Attenuator	SN: S5129 (30b)	01-Apr-15 (No. 217-02133)	Mar-16
Reference Probe ER3DV6	SN: 2328	12-Oct-15 (No. ER3-2328_Oct15)	Oct-16
DAE4	SN: 789	16-Mar-15 (No. DAE4-789_Mar15)	Mar-16
Secondary Standards	ID	Check Date (in house)	Scheduled Check
RF generator HP 8648C	US3642U01700	4-Aug-99 (in house check Apr-13)	In house check: Apr-16
Network Analyzer HP 8753E	US37390585	18-Oct-01 (in house check Oct-15)	In house check: Oct-16

	Name	Function	Signature
Calibrated by:	Michael Weber	Laboratory Technician	M.Weber
Approved by:	Katja Pokovic	Technical Manager	

Issued: January 20, 2016

This calibration certificate shall not be reproduced except in full without written approval of the laboratory.

©Copyright. All rights reserved by CTTL.

Calibration Laboratory of
Schmid & Partner
Engineering AG
Zeughausstrasse 43, 8004 Zurich, Switzerland

S Schweizerischer Kalibrierdienst
C Service suisse d'étalonnage
S Servizio svizzero di taratura
Swiss Calibration Service

Accredited by the Swiss Accreditation Service (SAS)
The Swiss Accreditation Service is one of the signatories to the EA Multilateral Agreement for the recognition of calibration certificates

Accreditation No.: SCS 0108

Glossary:

NORMx,y,z	sensitivity in free space
DCP	diode compression point
CF	crest factor (1/duty_cycle) of the RF signal
A, B, C, D	modulation dependent linearization parameters
Polarization φ	φ rotation around probe axis
Polarization ϑ	ϑ rotation around an axis that is in the plane normal to probe axis (at measurement center), i.e., ϑ = 0 is normal to probe axis
Connector Angle	information used in DASY system to align probe sensor X to the robot coordinate system

Calibration is Performed According to the Following Standards:

a) IEEE Std 1309-2005, " IEEE Standard for calibration of electromagnetic field sensors and probes, excluding antennas, from 9 kHz to 40 GHz", December 2005
b) CTIA Test Plan for Hearing Aid Compatibility, Rev 3.0, November 2013

Methods Applied and Interpretation of Parameters:

- *NORMx,y,z:* Assessed for E-field polarization ϑ = 0 for XY sensors and ϑ = 90 for Z sensor (f ≤ 900 MHz in TEM-cell; f > 1800 MHz: R22 waveguide).
- *NORM(f)x,y,z = NORMx,y,z * frequency_response* (see Frequency Response Chart).
- *DCPx,y,z:* DCP are numerical linearization parameters assessed based on the data of power sweep with CW signal (no uncertainty required). DCP does not depend on frequency nor media.
- *PAR:* PAR is the Peak to Average Ratio that is not calibrated but determined based on the signal characteristics
- *Ax,y,z; Bx,y,z; Cx,y,z; Dx,y,z; VRx,y,z: A, B, C, D* are numerical linearization parameters assessed based on the data of power sweep for specific modulation signal. The parameters do not depend on frequency nor media. *VR* is the maximum calibration range expressed in RMS voltage across the diode.
- *Spherical isotropy (3D deviation from isotropy)*: in a locally homogeneous field realized using an open waveguide setup.
- *Sensor Offset*: The sensor offset corresponds to the offset of virtual measurement center from the probe tip (on probe axis). No tolerance required.
- *Connector Angle*: The angle is assessed using the information gained by determining the *NORMx* (no uncertainty required).

©Copyright. All rights reserved by CTTL.

Probe ER3DV6

SN:2272

Manufactured: November 29, 2001
Calibrated: January 19, 2016

Calibrated for DASY/EASY Systems
(Note: non-compatible with DASY2 system!)

©Copyright. All rights reserved by CTTL.

DASY/EASY - Parameters of Probe: ER3DV6 - SN:2272

Basic Calibration Parameters

	Sensor X	Sensor Y	Sensor Z	Unc (k=2)
Norm ($\mu V/(V/m)^2$)	1.66	1.71	1.78	± 10.1 %
DCP (mV)[B]	100.4	99.4	100.7	

Modulation Calibration Parameters

UID	Communication System Name		A dB	B dB√µV	C	D dB	VR mV	Unc[E] (k=2)
0	CW	X	0.0	0.0	1.0	0.00	198.9	±3.8 %
		Y	0.0	0.0	1.0		165.5	
		Z	0.0	0.0	1.0		196.7	

The reported uncertainty of measurement is stated as the standard uncertainty of measurement multiplied by the coverage factor k=2, which for a normal distribution corresponds to a coverage probability of approximately 95%.

[B] Numerical linearization parameter: uncertainty not required.
[E] Uncertainty is determined using the max. deviation from linear response applying rectangular distribution and is expressed for the square of the field value.

©Copyright. All rights reserved by CTTL.

ER3DV6 – SN:2272 January 19, 2016

Frequency Response of E-Field
(TEM-Cell:ifi110 EXX, Waveguide: R22)

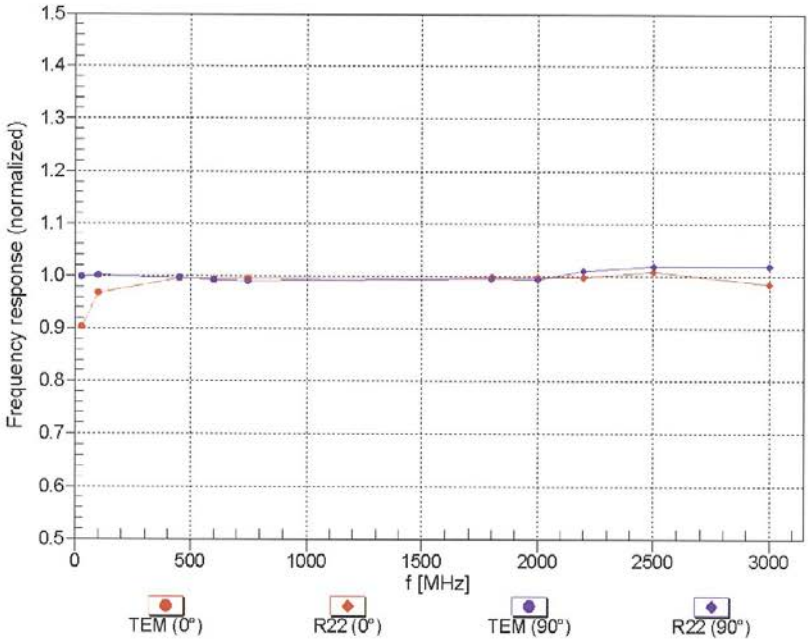

Uncertainty of Frequency Response of E-field: ± 6.3% (k=2)

©Copyright. All rights reserved by CTTL.

ER3DV6 – SN:2272

January 19, 2016

Receiving Pattern (ϕ), ϑ = 0°

f=600 MHz,TEM,0°

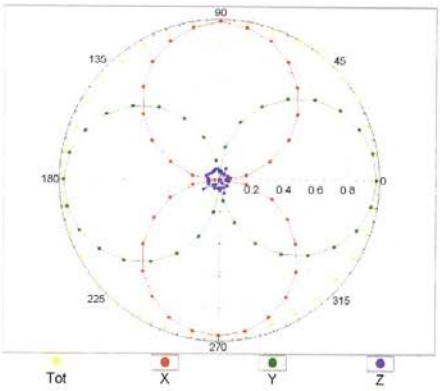

f=2500 MHz,R22,0°

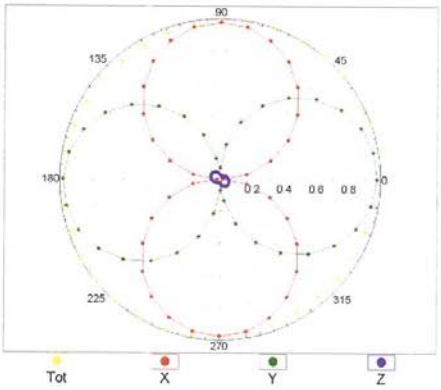

Receiving Pattern (ϕ), ϑ = 90°

f=600 MHz,TEM,90°

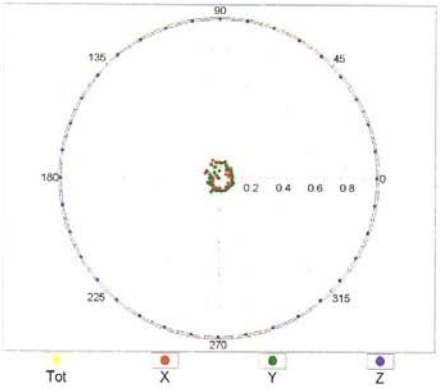

f=2500 MHz,R22,90°

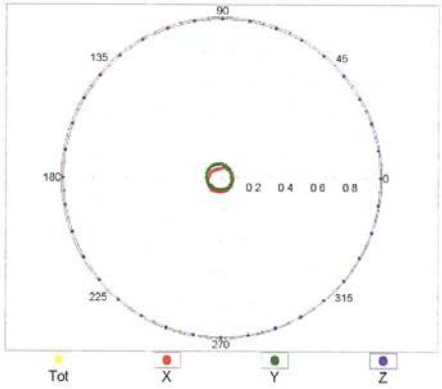

©Copyright. All rights reserved by CTTL.

ER3DV6 – SN:2272 January 19, 2016

Receiving Pattern (ϕ), ϑ = 0°

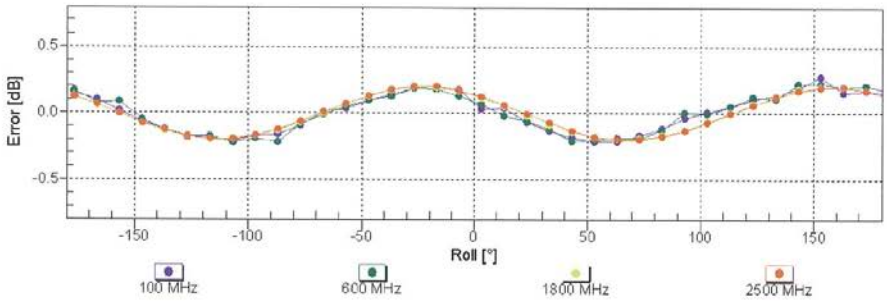

Uncertainty of Axial Isotropy Assessment: ± 0.5% (k=2)

Receiving Pattern (ϕ), ϑ = 90°

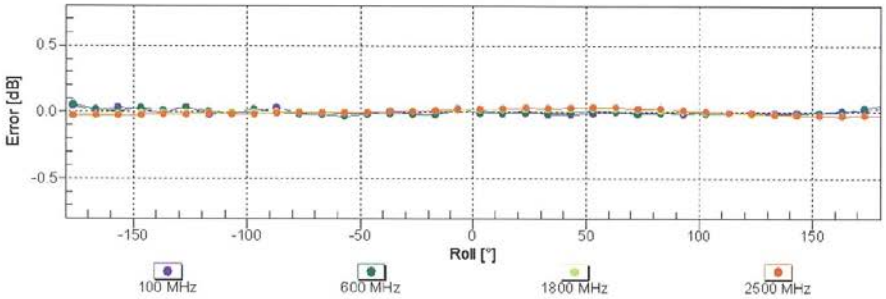

Uncertainty of Axial Isotropy Assessment: ± 0.5% (k=2)

©Copyright. All rights reserved by CTTL.

ER3DV6 – SN:2272

January 19, 2016

Dynamic Range f(E-field)
(TEM cell , f = 900 MHz)

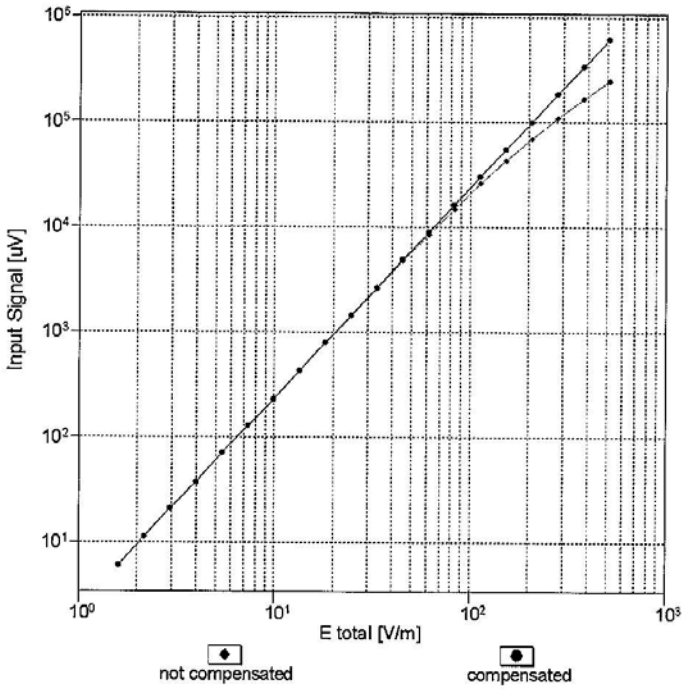

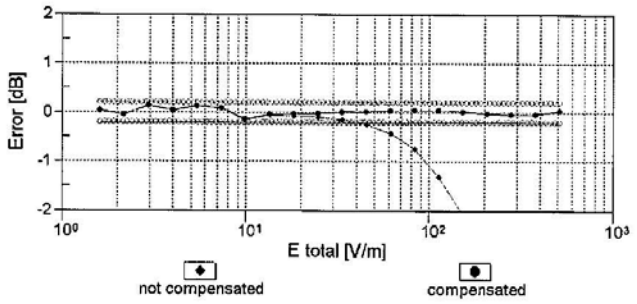

Uncertainty of Linearity Assessment: ± 0.6% (k=2)

©Copyright. All rights reserved by CTTL.

ER3DV6 – SN:2272

January 19, 2016

Deviation from Isotropy in Air

Error (ϕ, ϑ), f = 900 MHz

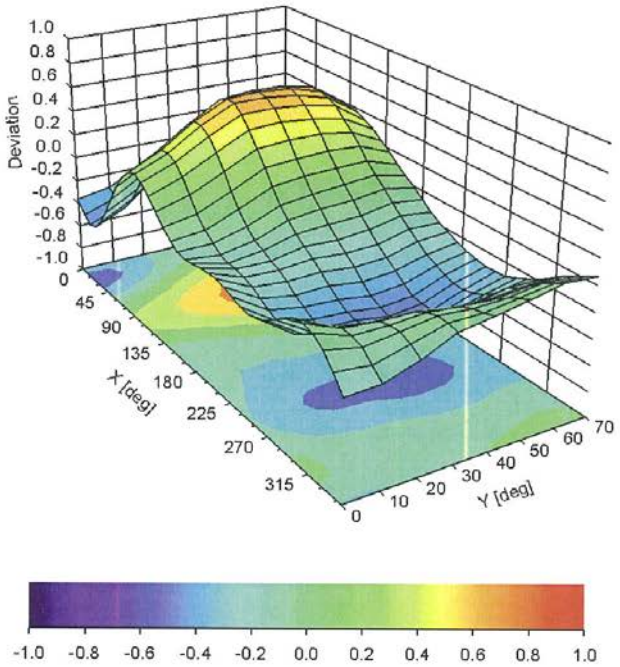

Uncertainty of Spherical Isotropy Assessment: ± 2.6% (k=2)

©Copyright. All rights reserved by CTTL.

DASY/EASY - Parameters of Probe: ER3DV6 - SN:2272

Other Probe Parameters

Sensor Arrangement	Rectangular
Connector Angle (°)	113.1
Mechanical Surface Detection Mode	enabled
Optical Surface Detection Mode	disabled
Probe Overall Length	337 mm
Probe Body Diameter	10 mm
Tip Length	10 mm
Tip Diameter	8 mm
Probe Tip to Sensor X Calibration Point	2.5 mm
Probe Tip to Sensor Y Calibration Point	2.5 mm
Probe Tip to Sensor Z Calibration Point	2.5 mm

©Copyright. All rights reserved by CTTL.

ANNEX E DIPOLE CALIBRATION CERTIFICATE

Dipole 835 MHz

Calibration Laboratory of
Schmid & Partner
Engineering AG
Zeughausstrasse 43, 8004 Zurich, Switzerland

S Schweizerischer Kalibrierdienst
C Service suisse d'étalonnage
Servizio svizzero di taratura
S Swiss Calibration Service

Accredited by the Swiss Accreditation Service (SAS)
The Swiss Accreditation Service is one of the signatories to the EA Multilateral Agreement for the recognition of calibration certificates

Accreditation No.: SCS 0108

Client CTTL-BJ (Auden)

Certificate No: CD835V3-1023_Aug16

CALIBRATION CERTIFICATE

Object	CD835V3 - SN: 1023
Calibration procedure(s)	QA CAL-20.v6 Calibration procedure for dipoles in air
Calibration date:	August 31, 2016

This calibration certificate documents the traceability to national standards, which realize the physical units of measurements (SI).
The measurements and the uncertainties with confidence probability are given on the following pages and are part of the certificate.

All calibrations have been conducted in the closed laboratory facility: environment temperature (22 ± 3)°C and humidity < 70%.

Calibration Equipment used (M&TE critical for calibration)

Primary Standards	ID #	Cal Date (Certificate No.)	Scheduled Calibration
Power meter NRP	SN: 104778	06-Apr-16 (No. 217-02288/02289)	Apr-17
Power sensor NRP-Z91	SN: 103244	06-Apr-16 (No. 217-02288)	Apr-17
Power sensor NRP-Z91	SN: 103245	06-Apr-16 (No. 217-02289)	Apr-17
Reference 20 dB Attenuator	SN: 5058 (20k)	05-Apr-16 (No. 217-02292)	Apr-17
Type-N mismatch combination	SN: 5047.2 / 06327	05-Apr-16 (No. 217-02295)	Apr-17
Probe ER3DV6	SN: 2336	31-Dec-15 (No. ER3-2336_Dec15)	Dec-16
Probe H3DV6	SN: 6065	31-Dec-15 (No. H3-6065_Dec15)	Dec-16
DAE4	SN: 781	04-Sep-15 (No. DAE4-781_Sep15)	Sep-16

Secondary Standards	ID #	Check Date (in house)	Scheduled Check
Power meter Agilent 4419B	SN: GB42420191	09-Oct-09 (in house check Sep-14)	In house check: Oct-17
Power sensor HP E4412A	SN: US38485102	05-Jan-10 (in house check Sep-14)	In house check: Oct-17
Power sensor HP 8482A	SN: US37295597	09-Oct-09 (in house check Sep-14)	In house check: Oct-17
RF generator R&S SMT-06	SN: 832283/011	27-Aug-12 (in house check Oct-15)	In house check: Oct-17
Network Analyzer HP 8753E	SN: US37390585	18-Oct-01 (in house check Oct-15)	In house check: Oct-16

	Name	Function	Signature
Calibrated by:	Leif Klysner	Laboratory Technician	
Approved by:	Katja Pokovic	Technical Manager	

Issued: September 1, 2016

This calibration certificate shall not be reproduced except in full without written approval of the laboratory.

©Copyright. All rights reserved by CTTL.

Calibration Laboratory of
Schmid & Partner
Engineering AG
Zeughausstrasse 43, 8004 Zurich, Switzerland

S Schweizerischer Kalibrierdienst
C Service suisse d'étalonnage
S Servizio svizzero di taratura
Swiss Calibration Service

Accredited by the Swiss Accreditation Service (SAS)
The Swiss Accreditation Service is one of the signatories to the EA Multilateral Agreement for the recognition of calibration certificates

Accreditation No.: SCS 0108

References

[1] ANSI-C63.19-2007
American National Standard for Methods of Measurement of Compatibility between Wireless Communications Devices and Hearing Aids.

[2] ANSI-C63.19-2011
American National Standard, Methods of Measurement of Compatibility between Wireless Communications Devices and Hearing Aids.

Methods Applied and Interpretation of Parameters:

- *Coordinate System:* y-axis is in the direction of the dipole arms. z-axis is from the basis of the antenna (mounted on the table) towards its feed point between the two dipole arms. x-axis is normal to the other axes. In coincidence with the standards [1], the measurement planes (probe sensor center) are selected to be at a distance of 10 mm (15 mm for [2]) above the top metal edge of the dipole arms.
- *Measurement Conditions:* Further details are available from the hardcopies at the end of the certificate. All figures stated in the certificate are valid at the frequency indicated. The forward power to the dipole connector is set with a calibrated power meter connected and monitored with an auxiliary power meter connected to a directional coupler. While the dipole under test is connected, the forward power is adjusted to the same level.
- *Antenna Positioning:* The dipole is mounted on a HAC Test Arch phantom using the matching dipole positioner with the arms horizontal and the feeding cable coming from the floor. The measurements are performed in a shielded room with absorbers around the setup to reduce the reflections.
  It is verified before the mounting of the dipole under the Test Arch phantom, that its arms are perfectly in a line. It is installed on the HAC dipole positioner with its arms parallel below the dielectric reference wire and able to move elastically in vertical direction without changing its relative position to the top center of the Test Arch phantom. The vertical distance to the probe is adjusted after dipole mounting with a DASY5 Surface Check job. Before the measurement, the distance between phantom surface and probe tip is verified. The proper measurement distance is selected by choosing the matching section of the HAC Test Arch phantom with the proper device reference point (upper surface of the dipole) and the matching grid reference point (tip of the probe) considering the probe sensor offset. The vertical distance to the probe is essential for the accuracy.
- *Feed Point Impedance and Return Loss:* These parameters are measured using a HP 8753E Vector Network Analyzer. The impedance is specified at the SMA connector of the dipole. The influence of reflections was eliminating by applying the averaging function while moving the dipole in the air, at least 70cm away from any obstacles.
- *E-field distribution:* E field is measured in the x-y-plane with an isotropic ER3D-field probe with 100 mW forward power to the antenna feed point. In accordance with [1] and [2], the scan area is 20mm wide, its length exceeds the dipole arm length (180 or 90mm). The sensor center is 10 mm (15 mm for [2]) (in z) above the metal top of the dipole arms. Two 3D maxima are available near the end of the dipole arms. Assuming the dipole arms are perfectly in one line, the average of these two maxima (in subgrid 2 and subgrid 8) is determined to compensate for any non-parallelity to the measurement plane as well as the sensor displacement. The E-field value stated as calibration value represents the maximum of the interpolated 3D-E-field, in the plane above the dipole surface.
- *H-field distribution:* H-field is measured with an isotropic H-field probe with 100mW forward power to the antenna feed point, in the x-y-plane. The scan area and sensor distance is equivalent to the E-field scan. The maximum of the field is available at the center (subgrid 5) above the feed point. The H-field value stated as calibration value represents the maximum of the interpolated H-field, 10mm above the dipole surface at the feed point.

The reported uncertainty of measurement is stated as the standard uncertainty of measurement multiplied by the coverage factor k=2, which for a normal distribution corresponds to a coverage probability of approximately 95%.

©Copyright. All rights reserved by CTTL.

Measurement Conditions

DASY system configuration, as far as not given on page 1.

DASY Version	DASY5	V52.8.8
Phantom	HAC Test Arch	
Distance Dipole Top - Probe Center	10, 15 mm	
Scan resolution	dx, dy = 5 mm	
Frequency	835 MHz ± 1 MHz	
Input power drift	< 0.05 dB	

Maximum Field values at 835 MHz

H-field 10 mm above dipole surface	condition	**interpolated maximum**
Maximum measured	100 mW input power	**0.450 A/m ± 8.2 % (k=2)**

E-field 10 mm above dipole surface	condition	**Interpolated maximum**
Maximum measured above high end	100 mW input power	166.0 V/m = 44.40 dBV/m
Maximum measured above low end	100 mW input power	159.9 V/m = 44.08 dBV/m
Averaged maximum above arm	100 mW input power	**162.9 V/m ± 12.8 % (k=2)**

E-field 15 mm above dipole surface	condition	**Interpolated maximum**
Maximum measured above high end	100 mW input power	106.4 V/m = 40.54 dBV/m
Maximum measured above low end	100 mW input power	104.5 V/m = 40.38 dBV/m
Averaged maximum above arm	100 mW input power	**105.5 V/m ± 12.8 % (k=2)**

©Copyright. All rights reserved by CTTL.