BBB100-1
Operation Description

1. Overview:

BBB100-1 works GSM Quad-band (GSM850/GSM900/DCS/PCS band) and UMTS Band1/2/4/5/6/8, and FDD-LTE Band1/2/3/4/5/7/8/12/13/17/19/20/28/29/30 TDD-LTE BAND 38/39/40/41. And CPU runs at 2.0GHz, with 32G Bytes eMMC and 24G bits LPDDR3.

1.1. The main IC include

Function module	Chipset manufacture part number	Remark
Base band	MSM8953	BB Chipset, 857 NSP, QUALCOMM
PMIC	PM8953	PMU Chipset, 187 FOWNSP , QUALCOMM
PMI8952	PMI8952	PMU Chipset, 144 WLNSP , QUALCOMM
Emcp	KMRX1000BM-B614	32GB eMMC + 24Gb QDP LPDDR3, 221FBGA, Samsung
Transceiver	WTR3925	Transceiver Chipset,106B WLPSP,3.83×3.83×0.55 mm,0.35 mm,N/A,WTR-3925-2-106BWLPSP-HR-03-0,QUALCOMM
BT/Wi-Fi/FM	WCN3680B	WiFi/BT IC,WLAN,79B WLNSP 0.63 mm, QUALCOMM
GPS	(Integrated in)WTR3925	Transceiver Chipset,106B WLPSP,3.83×3.83×0.55 mm,0.35 mm,N/A,WTR-3925-2-106BWLPSP-HR-03-0,QUALCOMM
G-Sensor + Gyroscope	BMI160	Accelerometer and gyroscope,3×2.5×0.83 mm,14-Pin LGA,BOSCH
ALS&PROX	RPR-0521	Digital ALS & Proximity Module,8 pin, Rohm
Balun	HHM17147A1	Balun,Multilayer,673-2700 MHz,1.6×0.8×0.6 mm,6 PINs,N/A,HHM17147A1,TDK
PAMID	SKY78110-14	Front End Module,WCDMA/LTE B5,8,12,13,17,19,20,28,29,50-Pad,7×6×0.8 mm
PAMID	SKY78112-14	Front End Module,FDD/TDD LTE B7,30,38,40,41,34-Pad,5×4.3×0.75 mm
PAMID	SKY78114-21	Front End Module,WCDMA/LTE B1,2,3,4,39,44-Pad,7×4.7×0.8 mm
2G PA	SKY77360-12	PA Module,2G for Quad

		Band,QFN,3.00×3.00×0.67 mm
Saw Filter	LFL182G04TF6D870	Saw Filter,N/A,2045 MHz,1.6×0.8×0.65 mm,3 PINs
Low pass filter	LFL18829MTCRD627	Low pass filter,N/A,698-960 MHz,1.6×0.8×0.7 mm,6 PINs,N/A
Antenna Switch Module,DPDT	CXA4461UR	Antenna Switch Module,DPDT SOI Antenna switching,2.8 V,2×2×0.55 mm
SP6T Switch	XMSS1T3G0PA-011	SP6T Switch,1.6×1.6×0.4 mm,12-Pin,for 0.7-2.7 GHz
Diversity Antenna Switch Module	SKY13550-667LF	Antenna Switch Module,0.4-3.8 GHz DP8T(SP4T/SP4T),2.5-4.8 V,1.6×2×0.55 mm,14-Pin,SKY13550-667LF,SKYWORKS
SP3T	RTC8613M	Antenna Switch Module,0.1 GHz-3 GHz SP3T Swith,2.45-3.6 V,1.1×1.1×0.37 mm
SP5T	BGS15MA12	SP5T Rx Diversity Switch,1.1×1.9×0.65 mm,ATSLP-12-4,N/A
Saw Filter	DEA162690LT-5051B1	Saw Filter,Low Pass,673-2690 MHz,1.6×0.8×0.6 mm,4 PINs,N/A
Low Pass Filter	DEA101990LT-6302B1	Low Pass Filter,Multilayer,1710-1990 MHz,1.0×0.5×0.45 mm,4 PINs,N/A
Duplexer Band28	SAYEY718MBC0F0A	SAW Duplexer,Band28A/Unbalanced/LR,718 MHz/773 MHz,1.8×1.4×0.6 mm,8 PINs
Saw Filter,Band 39	SAFEA1G90MA0F0A	Saw Filter,Band 39,1900 MHz,1.35×1.05×0.5 mm,5 PINs
Saw Filter,Band 39	SAFFB1G90KA0F0A	SAW Single Filter,Band39/Unbalanced,1900 MHz,1.1×0.9×0.5 mm,5 PINs
Duplexer Band30	SAYEY2G31BA0F0A	SAW Duplexer,B30/Unbalanced/LR/1814,2310 MHz/2355 MHz,1.8×1.4×0.6 mm,8 PINs
Saw Filter,Band 41	TQQ0041T	Saw Filter,Band 41 Tx/Rx,2496-2690 MHz,1.8×1.4×0.73 mm,8 PINs
Saw Filter,Band 40	885075	Saw Filter,Tx/Rx Filter,2300-2400 MHz,1.1×0.9×0.5 mm,5 PINs
High Pass Filter	FI 168H2593GG-T	High Pass Filter,Pass B41,rejection B3,B25,2496-2690 MHz,1.6×0.65×0.8 mm,3 PINs,N/A
SAW Dual Filter,B1/3/	SAWFD1G84AA0F0A	SAW Dual Filter,B1/3/LH/1511,1842.5 MHz/2140 MHz,1.5×1.1×0.5 mm,10 PINs
Saw Dual Filter,for Band 1/25	SAWFD1G96AM1F0A	Saw Dual Filter,for Band 1/25,1962.5 MHz/2140 MHz,1.5×1.1×0.5 mm,10 PINs
Saw Filter, GSM850/Band 5 RX	SAFFB881MAN0F0AR15	Saw Filter,GSM850/Band 5 Rx,881.5 MHz,1.1×0.9×0.5 mm,5 PINs
SAW Single Filter,for Band7	SAFFB2G65AA0F0A	SAW Single Filter,for Band7 / Unbalanced,2655 MHz,1.1×0.9×0.5 mm,5 PINs
Saw Filter,	SAFFB942MAN0F0A	Saw Filter,FOR GSM900/BAND8 Rx,942.5

GSM850/Band 8 RX		MHz,1.1×0.9×0.5 mm,5 PINs
Saw Filter,B12+13	SAFFB742MAA0F0A	Saw Filter,B12+13,Unbalanced,742.5 MHz,1.1×0.9×0.5 mm,5 PINs
SAW Single Filter,for Band20	SAFFB806MAA0F0A	SAW Single Filter,for Band20 / Unbalanced,806 MHz,1.1×0.9×0.5 mm,5 PINs
Saw Filter,for Band28	SAFFB780MAA0F0A	Saw Filter,for Band28/Unbalanced,758-803 MHz,1.1×0.9×0.5 mm,5 PINs
SAW Single Filter,for Band 29	SAFFB722MAA0F0A	SAW Single Filter,for Band 29(FLO)/Unbalanced,722.5 MHz,1.1×0.9×0.5 mm,5 PINs
Saw Single Filter,B30	SAFFB2G35KA1F0A	Saw Single Filter,B30/Unbalanced/5pin/1109,2355 MHz,1.1×0.9×0.5 mm,5 PINs
SAW Single Filter,Band39	SAFFB1G90KA0F0A	SAW Single Filter,Band39/Unbalanced,1900 MHz,1.1×0.9×0.5 mm,5 PINs
SAW Single Filter,for Band 40	SAFFB2G35AA0F0A	SAW Single Filter,for Band 40,2350 MHz,1.1×0.9×0.5 mm,5 PINs
Saw Filter,for Band41	SAFRD2G59MA0F0A	Saw Filter,for Band41/Unbalanced,2498 MHz,1.8×1.4×0.65 mm,3 PINs
SAW Filter GPS	SAFFB1G56KB0F0A	SF,1575.42/1602 MHz 5 PINs, Murata
GPS LNA	BGU8009	GPS LNA, 18dB,1.1×0.9×0.47,NXP
Crystal 19.2MHz	1MAA19200ACA	Crystal,19.2MHz,±12ppm,7 pF,2.5x2.0x0.8 mm,N/A,1MAA19200ACA,KDS
BT/WIFI Module	Sky85312-11	2.4G Module, 2.3×2.3×0.33,Skyworks
BT/WIFI Module	Sky85720-11	5 G Module, 2.3×2.3×0.33,Skyworks
RF Connector	C90P103-10004-H	RF Connector,Over PCB,1 PINs,0 mm,2.5x2.5xH1.4 mm,W/O POST+W/O DIP,N/A,C90P103-10004-H,SPEED TECH

1.2. RECOMMENDABLE OPERATION CONDITION:

Normal Supply Voltage (V d.c.)	3.85V
Maximum Extreme Supply Voltage (V d.c.)	4.4V
Minimum Extreme Supply Voltage (V d.c.)	3.6V
Minimum Extreme Temperature**	-10 degree
SIM/USIM Voltage	1.8 / 3v

1.3. ABSOLUTE MAXIMUM RATING of PAMID SKY78110:

PA parameter	Specification		
	Min.	Type.	Max.
Power supply voltage	-0.5V	-	12V

Power supply current	-	-	0.4A

1.4. ABSOLUTE MAXIMUM RATING of PAMID SKY78112

PA parameter	Specification		
	Min.	Type.	Max.
Power supply voltage	0V	3.4v	12V
Power supply current	-	-	0.74A

1.5. ABSOLUTE MAXIMUM RATING of GSM PA: SKY78114

PA parameter	Specification		
	Min.	Type.	Max.
Power supply voltage	0V	3.4v	12V
Power supply current	-	-	0.63A

1.6. ABSOLUTE MAXIMUM RATING of GSM PA: SKY77360

PA parameter	Specification		
	Min.	Type.	Max.
Power supply voltage	0V	3.5v	4.8v
Power supply current	-	-	2A

1. System diagram Overview:

1.1. Overview

The MSM8953+WTR3925 supports high-performance applications worldwide using a variety of wireless networks:

- GSM/GPRS/EDGE
- WCDMA R99, Rel 5 HSDPA, Rel 6 HSUPA, Rel 7 HSPA+, Rel8 DC-HSPA+
- LTE R10
- GPS and GNSS

Complementary ICs within the MSM8953 include:

- Wafer-level RF transceiver: WTR3925
- Power management: PM8953/PMI8952
- Wireless connectivity, including WLAN, Bluetooth: WCN3680B

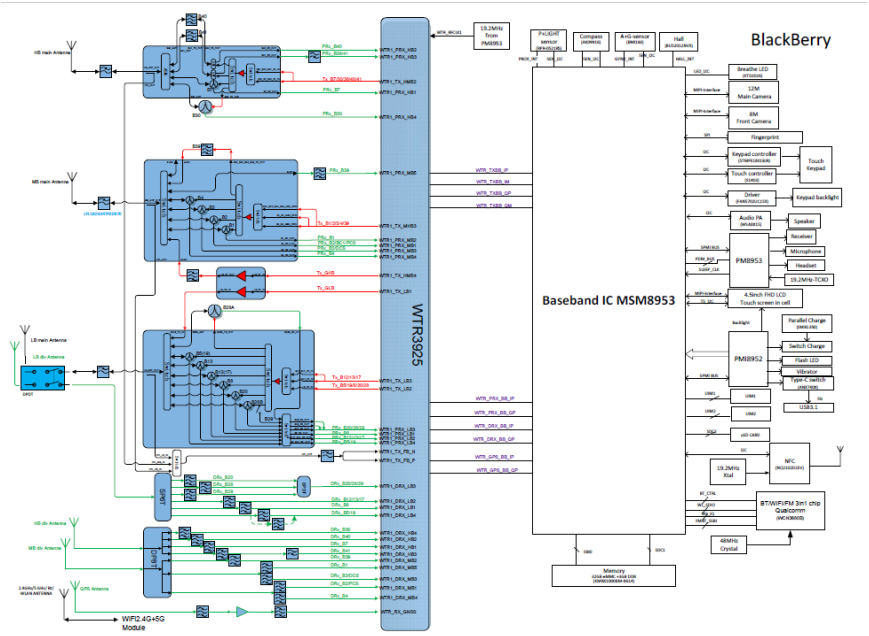

1.2. RF

RF (Radio Frequency) section is in charge of the signal transmit and receiving, signal modulation and demodulation.

Product technical parameters:

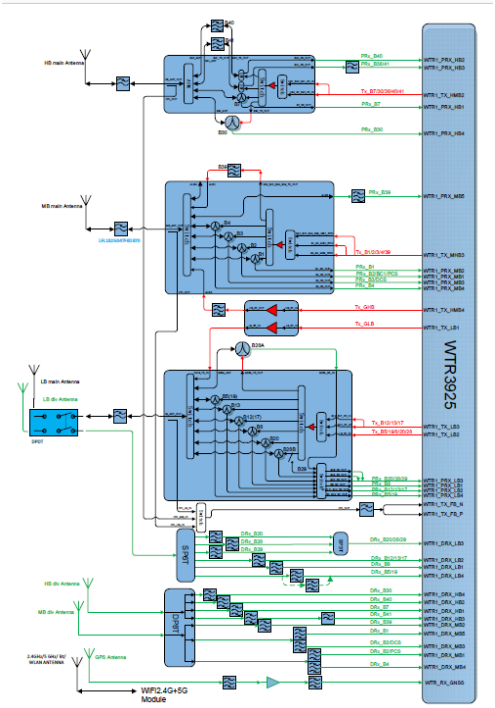

GSM

Items	GSM850	GSM900	DCS	PCS
Frequency allocation	TX(Uplink) :824M-849MHZ RX(Downlink) :869M-894MHZ	TX(Uplink) :880M-915MHZ RX(Downlink) :925M-960MHZ	TX(Uplink): 1710M-1785MHZ RX(Downlink): 1805M-1880MHZ	TX(Uplink): 1850M-1910MHZ RX(Downlink): 1930M-1990MHZ
Channel band width	200KHz	200KHz	200KHz	200KHz
Channel	128-251	975-1023 , 0-124	512-885	512-810
Modulation	GMSK,BT=0.3, 8PSK (for EGPRS)	GMSK,BT=0.3, 8PSK (for EGPRS)	GMSK,BT=0.3, 8PSK (for EGPRS)	GMSK,BT=0.3, 8PSK (for EGPRS)

EDGE Class	12	12	12	12
TX/RX channel space	45MHz	45MHz	95MHz	80MHz
(Fn)Freq. calculating formula	Fn=824.2+(N-128) *0.2 N: Channel No. Unit: MHz	Fn=880.2+(N-975) *0.2 N: Channel No. Unit: MHz	Fn=1710.2+(N-512)*0.2 N: Channel No. Unit: MHz	Fn=1850.2+(N-512)*0.2 N: Channel No. Unit: MHz

GPRS/ EDGE

GPRS/ EDGE	---GPRS Class 12 CS-1~ CS-4 ---EDGE Class 12 MCS-1~ MCS-9	
DTM Support	---GPRS Class A	**YES**
VOIP Support	**YES**	

WCDMA

Items	**BAND1**	**BAND5**	**BAND4**	**BAND8**	**BAND2**
Frequency allocation	TX(Uplink) :1920-1980 MHZ RX(Downlink) :2110 - 2170MHZ	TX(Uplink) :824-849MHZ RX(Downlink) :869-894MHZ	TX(Uplink) :1710-1755MHZ RX(Downlink) :2110-2155MHZ	TX(Uplink) :880-915MHZ RX(Downlink) :925 - 960MHZ	TX(Uplink) :1850-1910MHZ RX(Downlink) :1930 - 1990MHZ
Channel band width	5MHz	5MHz	5MHz	5MHz	5MHz
Channel	9612~9888	4132-4233	1312-1513	2712-2863	9262~9538
Modulation	UL/DL:QPSK	UL/DL:QPSK	UL/DL:QPSK	UL/DL:QPSK	UL/DL: QPSK

HSUPA Category	6	6	6	6	6
HSDPA Category	10	10	10	10	10
HSPA+ Category	14	14	14	14	14
DC-HSPA+ Category	24	24	24	24	24
TX/RX channel space	190MHz	45MHz	400MHz	80MHz	80MHz
(Fn)Freq. calculating formula	Fn = 1922.4 + (N-9612) *0.2 N: Channel No. Unit: MHz	Fn = 826.4 + (N-4132) *0.2 N: Channel No. Unit: MHz	Fn = 1712.4 + (N-1312) *0.2 N: Channel No. Unit: MHz	Fn = 882.4 + (N-2712) *0.2 N: Channel No. Unit: MHz	Fn = 1852.4 + (N-9262) *0.2 N: Channel No. Unit: MHz

Category	HS-DSCH						E-DCH			
	R5	R7	R8	R9	R10	R11	R6	R7	R9	R11
	10	14	24	N/A	N/A	N/A	6	N/A	N/A	N/A

MIMO, Multi-Cell	Downlink		Uplink	
	MIMO	Multi-Cell	MIMO	Multi-Cell
	N/A	Dual-Cell	N/A	N/A
VOIP Support	**YES**			

FDD-LTE

Items	BAND1	BAND2	BAND3	BAND4
Frequency allocation	TX(Uplink) :1920-1980MHZ RX(Downlink) :2110-2170MHZ	TX(Uplink) :1850-1910MHZ RX(Downlink) :1930 - 1990MHZ	TX(Uplink) :1710-1785MHZ RX(Downlink) :1805-1800MHZ	TX(Uplink) :1710-1755MHZ RX(Downlink) :2110-2155MHZ

Channel band width		5,10,15,20MHz	1.4,3,5, 10,15,20MHz	1.4,3,5, 10,15,20MHz	1.4,3,5, 10,15,20MHz
Channel UPLINK		18000-18599	18600-19199	19200-19949	19950-20399
Modulation	UL	QPSK/16QAM	QPSK/16QAM	QPSK/16QAM	QPSK/16QAM
	DL	QPSK/16QAM /64QAM	QPSK/16QAM /64QAM	QPSK/16QAM /64QAM	QPSK/16QAM /64QAM
Category		6	6	6	6
TX/RX channel space		190MHz	80MHz	90MHz	400MHz
(Fn)Freq. calculating formula		FUL = FUL_low + 0.1(NUL – NOffs-UL)			

Items		BAND5	BAND7	BAND8	BAND12
Frequency allocation		TX(Uplink) :824-849MHZ RX(Downlink) :869 -894MHZ	TX(Uplink) :2500-2570MHZ RX(Downlink) :2620-2690MHZ	TX(Uplink) :880-915MHZ RX(Downlink) :925-960MHZ	TX(Uplink) :699-716MHZ RX(Downlink) :729-746MHZ
Channel band width		1.4,3,5,10MHz	5,10,15,20MHz	1.4,3,5,10 MHz	1.4,3,5,10MHz
Channel UPLINK		20400-20650	20750-21449	21450-21799	23010-23180
Modulation	UL	QPSK/16QAM	QPSK/16QAM	QPSK/16QAM	QPSK/16QAM
	DL	QPSK/16QAM /64QAM	QPSK/16QAM /64QAM	QPSK/16QAM /64QAM	QPSK/16QAM /64QAM

Category	6	6	6	6
TX/RX channel space	45MHz	120MHz	45MHz	30MHz
(Fn)Freq. calculating formula	FUL = FUL_low + 0.1(NUL – NOffs-UL)			

Items		BAND13	BAND17	BAND20	BAND28
Frequency allocation		TX(Uplink) :777-787MHZ RX(Downlink) :746-757MHZ	TX(Uplink) :704-716MHZ RX(Downlink) :734-746MHZ	TX(Uplink) :832-862MHZ RX(Downlink) :791-821MHZ	TX(Uplink) :703-748MHZ RX(Downlink) :758-803MHZ
Channel band width		5,10MHz	5,10MHz	5,10,15,20 MHz	3,5,10,15,20 MHz
Channel UPLINK		20400-20650	20750-21449	24150-24449	27210~27660
Modulation	UL	QPSK/16QAM	QPSK/16QAM	QPSK/16QAM	QPSK/16QAM
	DL	QPSK/16QAM /64QAM	QPSK/16QAM /64QAM	QPSK/16QAM /64QAM	QPSK/16QAM /64QAM
Category		6	6	6	6
TX/RX channel space		31MHz	30MHz	41MHz	55MHz
(Fn)Freq. calculating formula		FUL = FUL_low + 0.1(NUL – NOffs-UL)			

Items	BAND29	BAND30	BAND19

Frequency allocation		RX(Downlink) :717-728MHZ	TX(Uplink) :2305-2315MHZ RX(Downlink) :2350-2360MHZ	TX(Uplink) :830-845MHZ RX(Downlink) :875-890MHZ
Channel band width		3,5,10 MHz	5,10MHz	5,10,15 MHz
Channel UPLINK		DOWNLINK:9675-9755	27685~27735	24025-24125
Modulation	UL	QPSK/16QAM	QPSK/16QAM	QPSK/16QAM
	DL	QPSK/16QAM /64QAM	QPSK/16QAM /64QAM	QPSK/16QAM /64QAM
Category		6	6	4
TX/RX channel space		0	45MHz	45MHz
(Fn)Freq. calculating formula		FUL = FUL_low + 0.1(NUL – NOffs-UL)		

TDD-LTE

Items		BAND38	BAND39	BAND40	BAND41
Frequency allocation		2570-2620MHZ	1880-1920MHZ	2300-2400MHZ	2496-2690MHZ
Channel band width		5,10,15,20 MHz	5,10,15,20 MHz	5,10,15,20 MHz	5,10,15,20 MHz
Channel UPLINK		37775-38225	38275-38625	38675-39625	39675-41565
Modulation	UL	QPSK/16QAM	QPSK/16QAM	QPSK/16QAM	QPSK/16QAM
	DL	QPSK/16QAM	QPSK/16QAM	QPSK/16QAM	QPSK/16QAM /64QAM

		/64QAM	/64QAM	/64QAM	
Category		6	6	6	6
(Fn)Freq. calculating formula		FUL = FUL_low + 0.1(NUL – NOffs-UL)			

MIMO, Multi-Cell	Downlink		Uplink	
	MIMO	Multi-Cell	MIMO	Multi-Cell
	2	N/A	N/A	N/A
VOLTE Support	**YES**			

DL LTE CA
4A+4A,5A+5A,7C,7B,7A+7A,2A+4A,2A+5A,2A+12A,2A+13A,2A+29A,4A+5A,4A+7A,4A+12A,4A+13A,4A+29A,5A+7A,

1.3. BT and wifi

WCN3680B device introduction

The WCN3680B IC integrates four different wireless connectivity technologies into a single device suitable for handsets and other mobile devices:

- Dual-band 2.4 GHz and 5 GHz wireless local area network (WLAN) compliant with the IEEE 802.11a/b/g/n specification and supports optional external PA for both 2 GHz and 5 GHz bands
- WCN3680B supports 11ac
- Bluetooth (BT) compliant with the BT specification version 4.2 (BR/EDR + BLE); ANT+ support
- Worldwide FM radio, supporting the Radio Data System (RDS) for Europe and the Radio

1.3.1.Block diagram

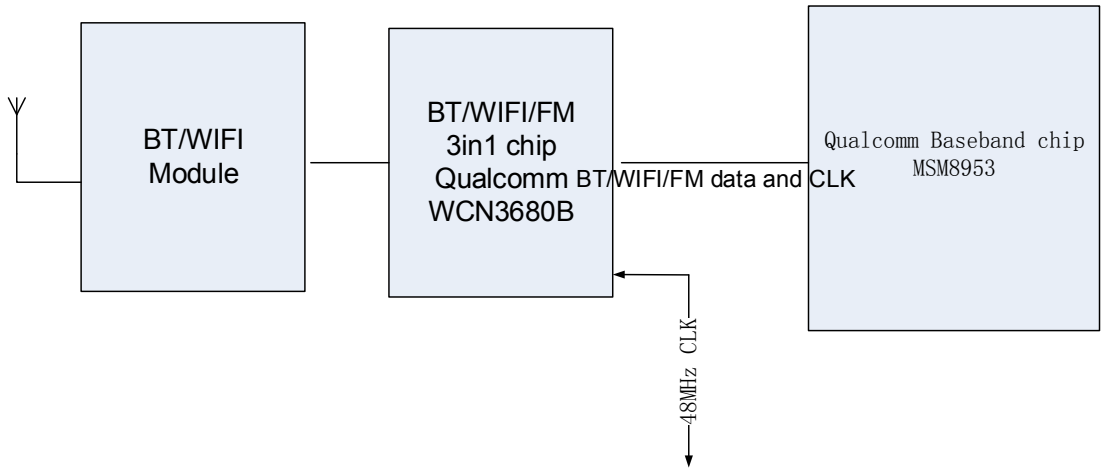

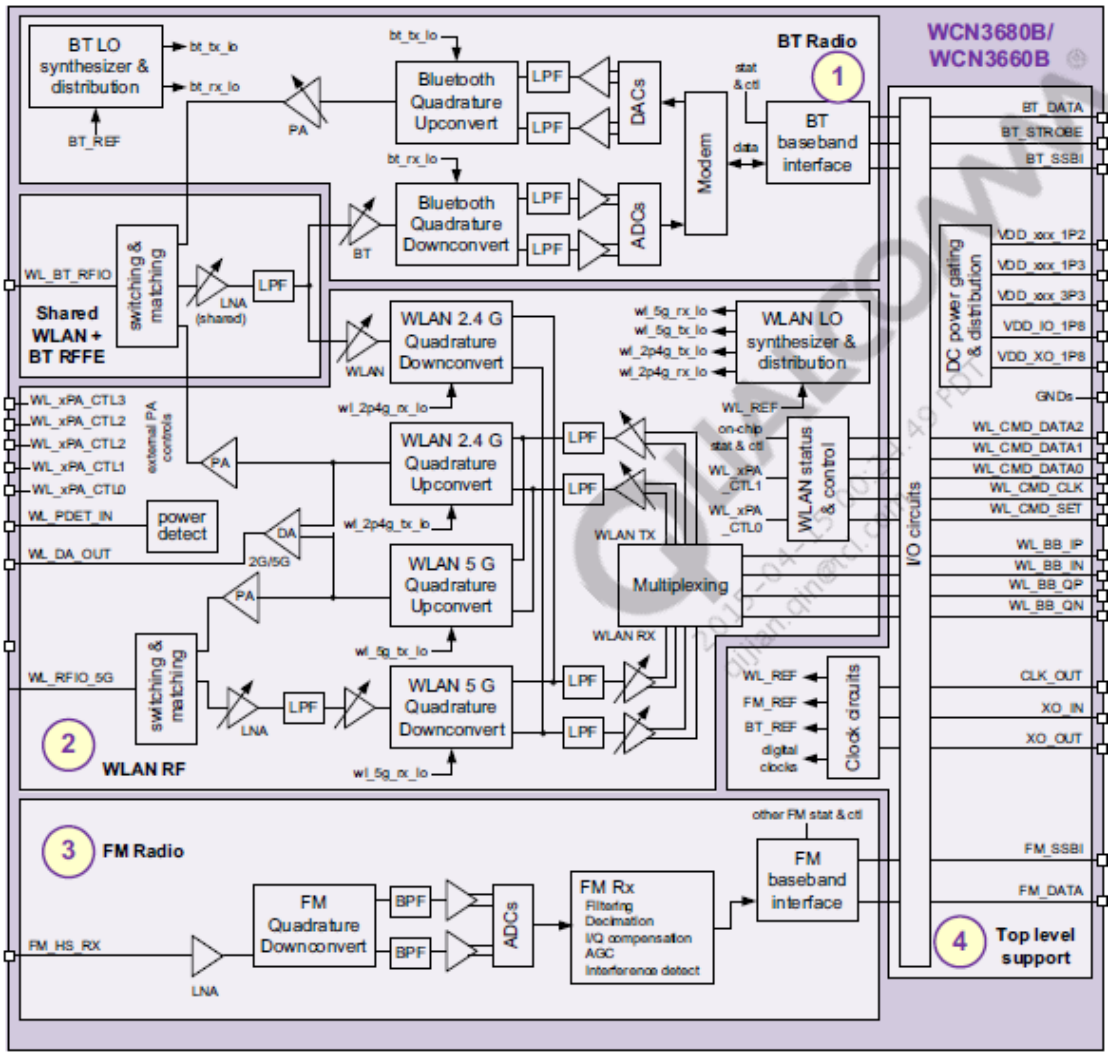

1.3.2.RADIO SPECIFICATIONS BLUETOOTH

Items	Values
Version	3.0 EDR+4.2 LE

Frequency Range	2400 MHz ~ 2483.5 MHz
RF Power Output	≤9dBm
Modulation	FHSS (Frequency Hopping Spread Spectrum) , GFSK,π/4 DQPSK and 8DPSK
Number or channels	79/40
Channel spacing	1MHz

1.3.3.RADIO SPECIFICATIONS WIFI

Items	Values
Frequency Range	2.412 GHz – 2.462 GHz (2.4GHz ISM Band) 5.150 GHz – 5.250 GHz (5GHz Non DFS Band) 5.250 GHz – 5.350 GHz (5GHz DFS Band) 5.470 GHz – 5.725 GHz (5GHz DFS Band) 5.725 GHz – 5.825 GHz (5GHz Non DFS Band)
RF Power Output	19 dBm +2.0/-2.0 dBm for 802.11b 18 dBm +2.0/-2.0 dBm for 802.11g（6MHz） 16 dBm +2.0/-2.0 dBm for 802.11g（54MHz） 18 dBm +2.0/-2.0 dBm for 802.11n2.4GHz（mcs0） 15 dBm +2.0/-2.0 dBm for 802.11n2.4GHz（mcs7） 5G: 17 dBm +2.0/-2.0 dBm for 802.11a（6MHz） 16 dBm +2.0/-2.0 dBm for 802.11a（54MHz） 17 dBm +2.0/-2.0 dBm for 802.11n5GHz（mcs0） 16 dBm +2.0/-2.0 dBm for 802.11n5GHz（mcs7） 17 dBm +2.0/-2.0 dBm for 802.11ac（mcs0） 15 dBm +2.0/-2.0 dBm for 802.11ac（mcs7） 13 dBm +2.0/-2.0 dBm for 802.11ac（mcs8） 11 dBm +2.0/-2.0 dBm for 802.11ac（mcs9） 5.8G: 13 dBm +2.0/-2.0 dBm for 802.11a（6MHz） 11 dBm +2.0/-2.0 dBm for 802.11a（54MHz） 13 dBm +2.0/-2.0 dBm for 802.11n5GHz（mcs0） 11 dBm +2.0/-2.0 dBm for 802.11n5GHz（mcs7） 13 dBm +2.0/-2.0 dBm for 802.11ac（mcs0） 11 dBm +2.0/-2.0 dBm for 802.11ac（mcs7） 9 dBm +2.0/-2.0 dBm for 802.11ac（mcs8） 7 dBm +2.0/-2.0 dBm for 802.11ac（mcs9）
Modulation	CCK\DSSS-OFDM\OFDM

Number or channels	33
Channel spacing	2.4GHz 5MHz \ 5GHz 20MHz
Bandwidth	20MHz(HT20)/40MHz(HT40)/80MHz(HT80)

Support	hotspot	Peer-to-Peer	DFS detection
	Yes	Yes	NO

NFC Specs:

Frequency range	13.56MHz+/-7KHz
Reader	ISO/IEC 14443A, ISO/IEC 14443B, ISO/IEC 15693, MIFARE 1K/4K, Sony Felica, reader for NFC Forum tags 1 to 4
Card	ISO/IEC 14443A, ISO/IEC 14443B, MIFARE 1K/4K, Sony Felica
Peer to peer	Active and passive 106 to 424kbps initiator and target,
Secure element interface	SWP/HCI
Type	**Active/Passive**

Power reduction

There is power reduction for WCDMA B2,B4; LTE B2,B4,B7,B30, detail of its mechanism showed as below picture.When receiver off, power reduction; receiver on, nomal power.

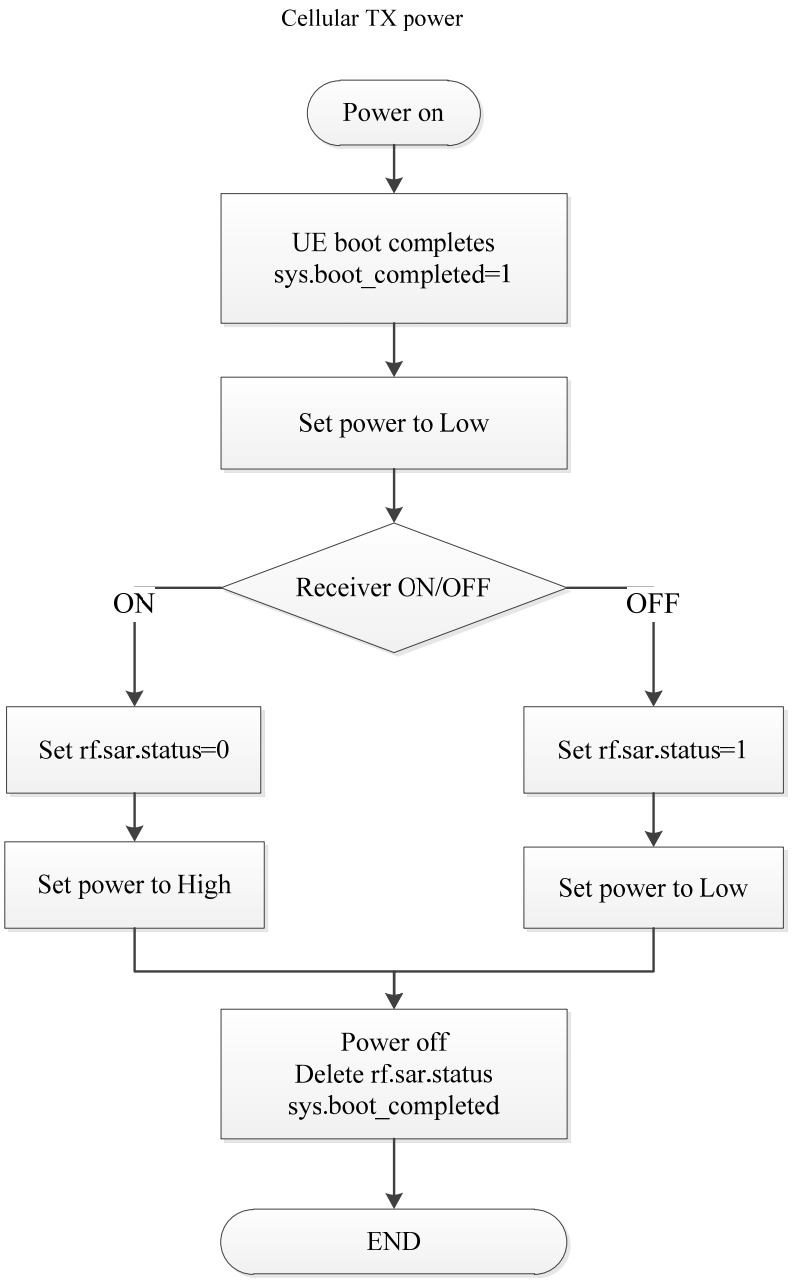

…

Antenna TX switching Description:

There is Antenna switching diversity (ASDiv) for GSM850,900; WCDMA B5/6, 8; LTE B5,8,12,13,17,28,29;

ASDiv function switches antennas according to the DL/UL signal strength in the field. ASDiv helps the phone pick up better signal strength for receiving and transmitting.

1.4. BB

BB (Base-Band) section is the control & management center of the mobile where OS (Operate System) running and provides the MMI for the mobile.

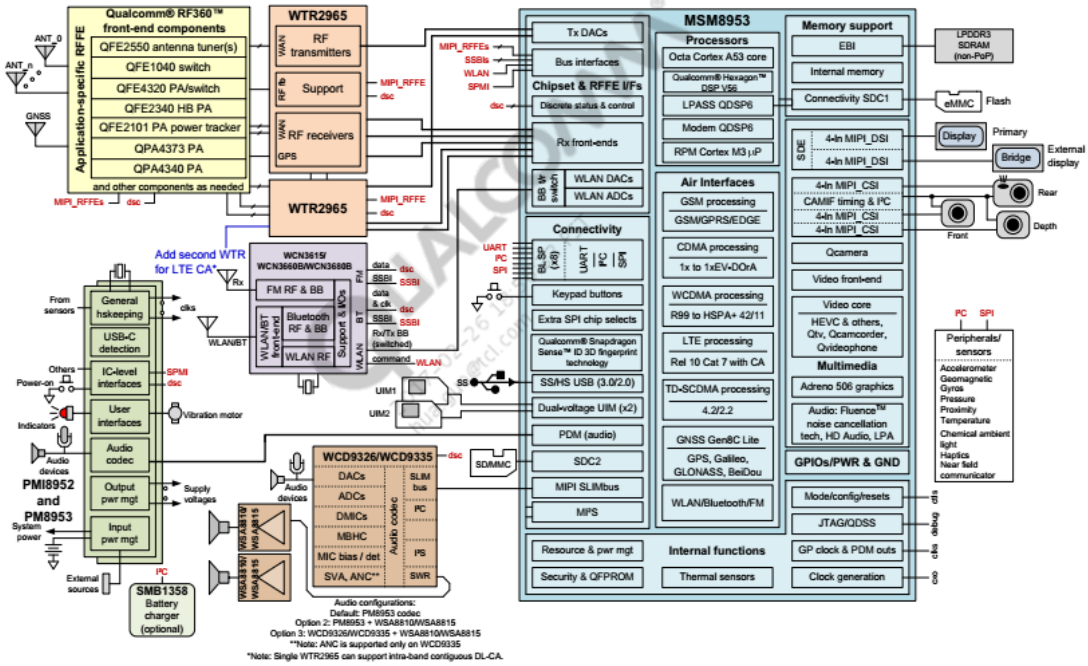

Main Features:

General MSM8953 device features

The basic MSM8953 system solution consists of RF transceiver: WTR3925, Power management: PM8953/PMI8952, Wireless connectivity, including WLAN, Bluetooth, WCN3680B.

The MSM8953 has a high level of integration that reduces the bill-of-material (BOM), which delivers board-area savings. It includes a customized 64-bit ARM Cortex A-53 octa-core applications processor non-package-on-package (non-PoP) LPDDR3 SDRAM memory

General features include:

Feature	MSM8953 capability
Processors	
Applications	ARM Cortex-A53 microprocessor cores at 2.0 GHz or 2.2 GHz ■ 64-bit processor ■ Octa core: one quad with 1 MB L2 cache + one quad with 512 KB L2 cache ■ Primary boot processor
Modem system	aDSP: Hexagon DSP V56 850 MHz 768 KB L2 caches ■ MSM8953: DSDS
RPM system	Cortex M3: Modem power manager (MPM) MPM coordinates shutdown/wakeup, clock rates, and VDDs
Memory support	
System memory via EBI	Non-PoP LPDDR3 SDRAM; 32-bit wide; up to 933 MHz
Graphics internal memory	136 KB unified SRAM pool on-chip memory (GMEM)
External memory via SDC	eMMC v5.1/SD3.0 flash devices
RF support	
RF operating bands	Defined by WTR device
Air interfaces GSM CDMA WCDMA TD-SCDMA LTE WLAN/BT/FM/NFC	 Yes Yes Yes Yes Yes Yes; all (with WCN3680B/WCN3660B); Yes
GNSS: Qualcomm® IZat™ engine	Gen 8C Lite; Support for three bands ***concurrently***: ■ GPS, BeiDou, and **GLONASS** or ■ GPS, BeiDou, and **Galileo**
Multimedia	
Display interfaces MIPI_DSI General display features	FHD (1920 x 1200) 60 fps; 16/18/24 bpp RGB Dual MIPI DSI four-lane Wi-Fi display: 1080p 30 fps (UBWC) FHD + 1080p 30 fps external wireless display

Feature	MSM8953 capability
Camera interfaces	Qcamera
Number of CSIs	Three; 2.1 Gbps per lane
Primary (CSI0)	Four-lane; supports CMOS and CCD sensors Up to 24 MP sensors
Secondary (CSI1)	Four-lane; supports CMOS and CCD sensors Up to 24 MP sensors
Tertiary (CSI2)	Four-lane; supports CMOS and CCD sensors Up to 24 MP sensors
Configurations supported	Pixel manipulations, camera modes, image effects, and postprocessing techniques, including defective pixel correction
General camera features	I^2C controls
Mobile display processor	SDE515 for display processing
Video applications performance	
Encode	4k at 30 fps, 1080p60, H.264, H.265, and VP8
Decode	4k at 30 fps, 1080p60, H.264, H.265, VP8, and VP9
Wireless display support (decode + encode)	1080p60D + 1080p30E
Graphics	Adreno 506; up to 650 MHz 3D graphics accelerator
Audio	
Low-power audio	Low-power audio for mp3 and AAC 5.1 playback; surround sound
Voice codec support	Versatile: many audio playback and voice modes; encoders for audio and FM recording; many concurrency modes
Audio codec support	G711; QCELP; EVRC, EVRC-B, EVRC-WB; AMR-NB, AMR-WB; GSM-EFR, GSM-FR, GSM-HR
Enhanced audio	MP3; aacPlus, eAAC; AMR-NB, AMR-WB, G.711, Windows Media Audio (WMA) 9/10 Pro
Synthesizer	Dolby Digital Plus and DTS-HD surround sound Fluence™ V6.1 and Fluence™ Pro noise cancellation technology QAudioFX/Qconcert/QEnsemble 128-voice polyphony wavetable
Web technologies	V8 JavaScript Engine optimizations WebKit browser JPEG hardware decode acceleration Networking stack IP and HTTP tuning Flash 10.x and video processor decode optimization
Messaging	Text messages; text encoding for SMS Multimedia messaging services: combined video (MPEG-4), still image (JPEG), voice tag (AMR), and text sent as message
Connectivity	
BLSP ports	Eight, 4 bits each; multiplexed serial interface functions
UART	Yes: up to 4 Mbps (only four ports)
I^2C	Yes: cameras, sensors, near field communicator (NFC), SMB, and so on.
SPI (master only)	Yes: cameras, sensors, and so on.
User-integrated module (UIM)	Two ports: dual voltage (1.8 V/2.85 V)
USB	One USB 3.0/2.0

Feature	MSM8953 capability
Secure digital interfaces	Up to two ports One 8-bit and one 4-bit SD 3.0; SD/multimedia card (MMC); eMMC v5.1
Wireless connectivity WLAN Bluetooth FM radio	With WCN3680B/WCN3660B/WCN3615 802.11 b/g/n/ac Bluetooth 4.2 LE and earlier Rx
Touchscreen support	Capacitive panels via ext IC (I^2C, SPI, and interrupts)
Audio interfaces MI^2S Serial low-power interchip media bus (SLIMbus) CDC PDM port	 Two ports (primary and secondary ports) One port SLIMbus interface to WCD9326/WCD9335 Interface between PM8953 and MSM8953 for audio application
Configurable GPIOs	
Number of GPIO ports	142 GPIOs: GPIO_0 to GPIO_141
Input configurations	Pull-up, pull-down, keeper, or no pull
Output configurations	Programmable drive current
Top-level mode multiplexer	Provides a convenient way to program groups of GPIOs
Internal functions	
Security Crypto engine QFPROM Security controller	Secure boot, SFS, ARM TrustZone, Qualcomm® Secure Execution Environment, secure debug, and Microsoft Windows Media DRM10 Increased throughput via, increased frequencies, and a new internal AXI-based data master; support for multiple execution environments per Crypto; algorithm to accelerate file system encryption (AES-XTS), IPSec, and SSL (HMAC-SHA, CCM, CMAC) Large fuse array, replaces previous-generation Qfuse chains; nonvolatile memory with faster and simpler programming Chip-wide configuration for security, feature enable, and debug; persistent storage of ID numbers and sensitive key data; secure HDCP key provisioning and secure debug facility; primary and secondary hardware key blocking for SFS
PLLs and clocks	Multiple clock regimes; watchdog and sleep timers 19.2 MHz CXO master clock input General-purpose outputs: M/N:D counter and PDM
Resource and power manager	Fundamental to power management Key blocks: RPM core, Cortex M3, security controller, and MPM Improved efficiency via clock control, split-rail power collapse, and voltage scaling; several low-power sleep modes
Debug	JTAG and QDSS
Others	Thermal sensors; modes and resets; and peripheral subsystem

Feature	MSM8953 capability
Chipset and RF front-end (RFFE) interface features	
WTR RFICs; WLAN baseband data GNSS baseband data Status and control	WTR2965; One Rx and one Tx analog interface Rx analog interface SSBIs and discrete signals, as needed, via GPIOs
Power management	PM8953 + PMI8952 Two 2-line System power management interface (SPMI); dedicated clock and reset lines; plus other GPIOs as needed
Package dimensions	857 NSP; 14 × 14 × 0.84 mm

2. Signal Flow

Brief of the mobile signal flow as below:

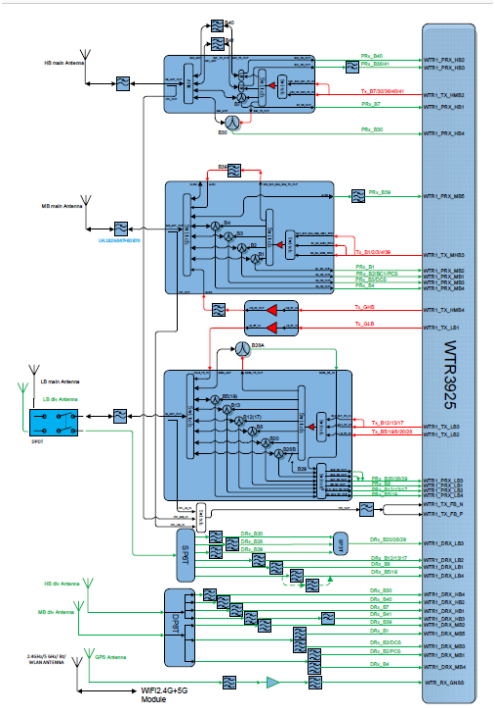

3.1. Receiver principle

The aerial signal mobile received go to RF Connector, and then transmit to transceiver via the selected band in RF switcher & SAW filter. Four IQ signals input to CPU, Go through A/D, DSP, and D/A section in CPU, then output to receiver.

3.2. Transmitter principle

Audio signal input from Microphone, Microphone convert the voice signal to analog signal and input to CPU (MSM8953). Go through A/D, DSP, and D/A section, output to transceiver by IQ signals, These analog input signals are buffered, filtered by low-pass filters, amplified, and then applied to the quadrature upconverter mixers …in transceiver(WTR3925). Then output to PA, go through duplexer, ASM to antenna.

End of this file