戒指使用手册

RayNeo Ring
user manual

了解您的产品介绍
Understand the product

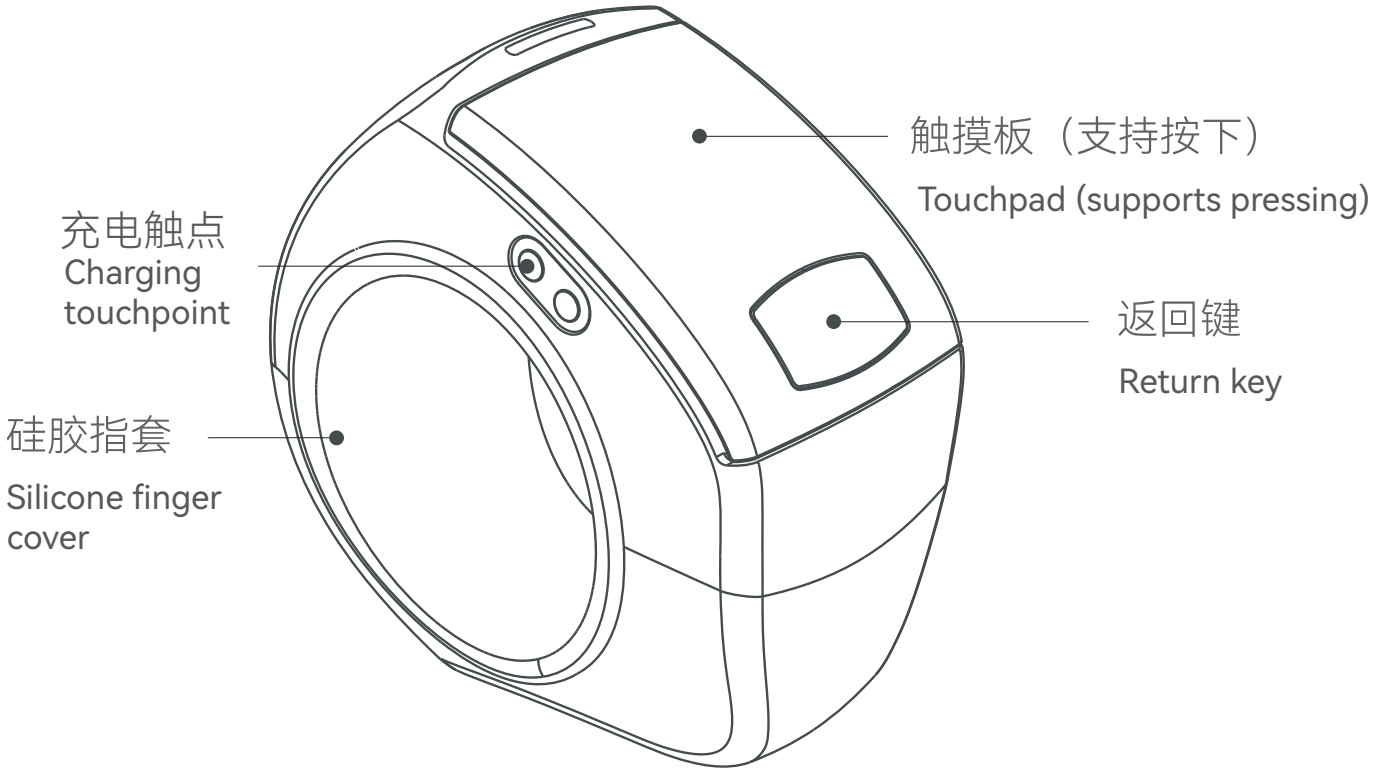

盒内包含　Box contains

控制器 x 1　充电线 x 1
硅胶指套 x 2　使用手册 x 1

Controller x 1　Charging cable x 1
Silicone finger cover x 2　User manual x 1

充电　Charging

将磁吸线与控制器充电触点连接进行充电。

Connect the magnetic suction line to the controller charging touchpoint for charging

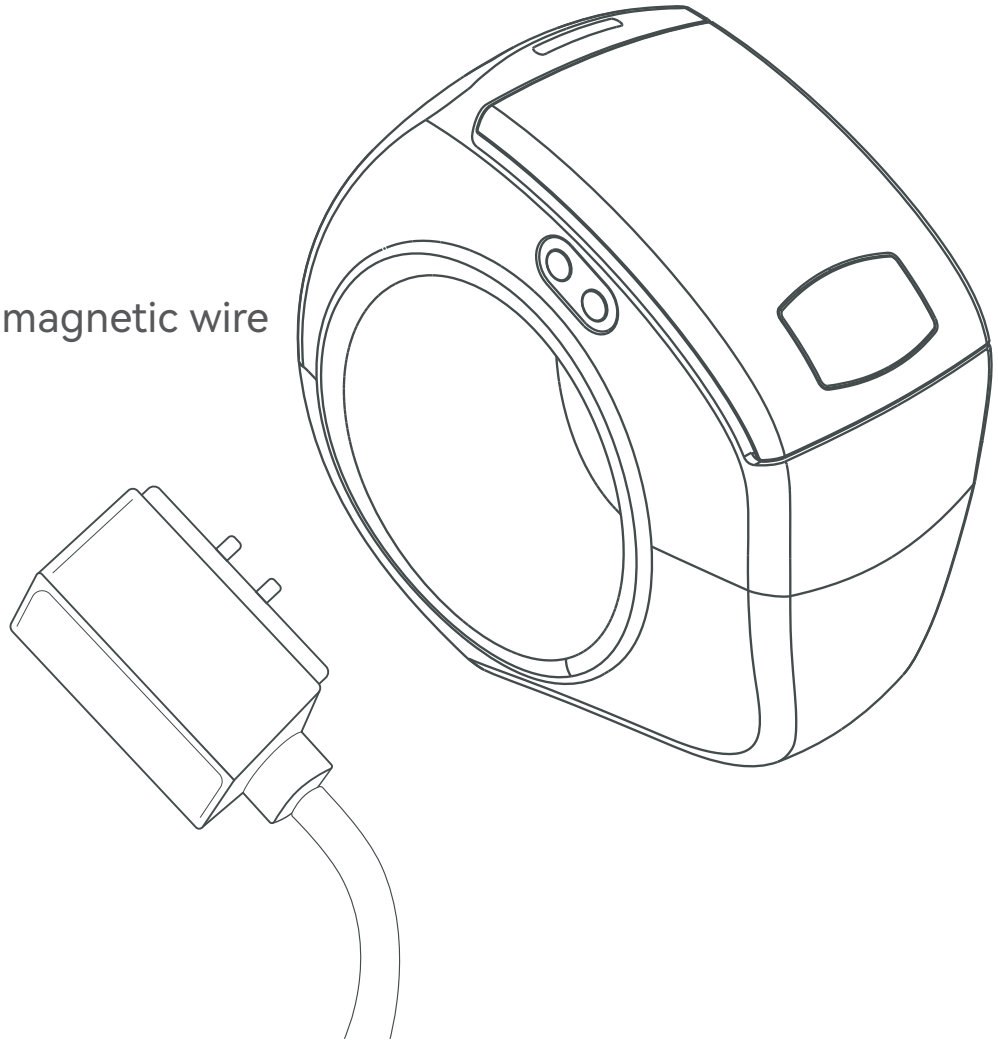

佩戴　Wear

将控制器取出，按图示佩戴在食指第二关节处，使用大拇指操控按键，请勿用力推压至手指末端。

Remove the controller, wear it as shown, use the thumb to control the buttons,
Do not push hard to the end of the finger

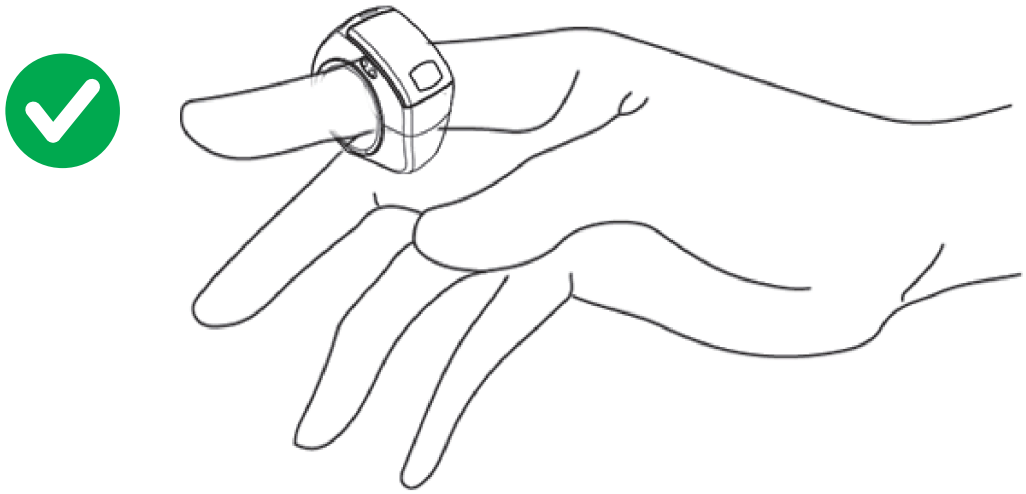

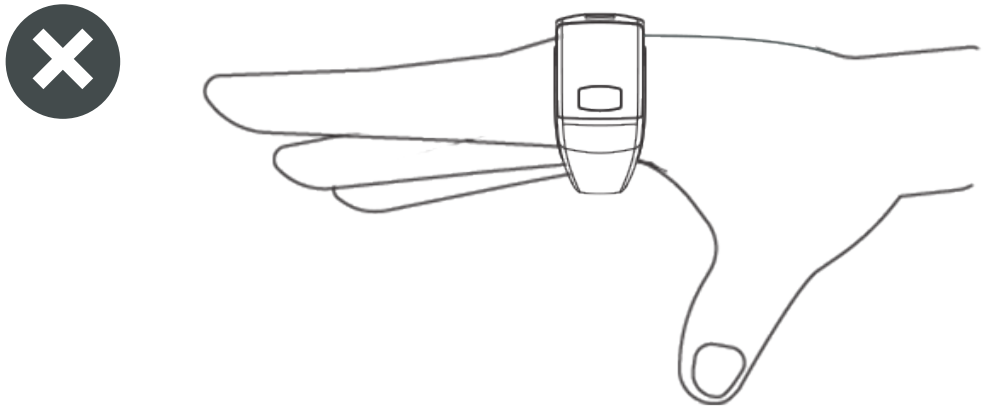

硅胶指套更换 Silicone Finger Cover Replacement

如操控时控制器转动，可更换小号硅胶指套后使用。

If the controller rotates during control, the small silicone finger cover can be replaced and used

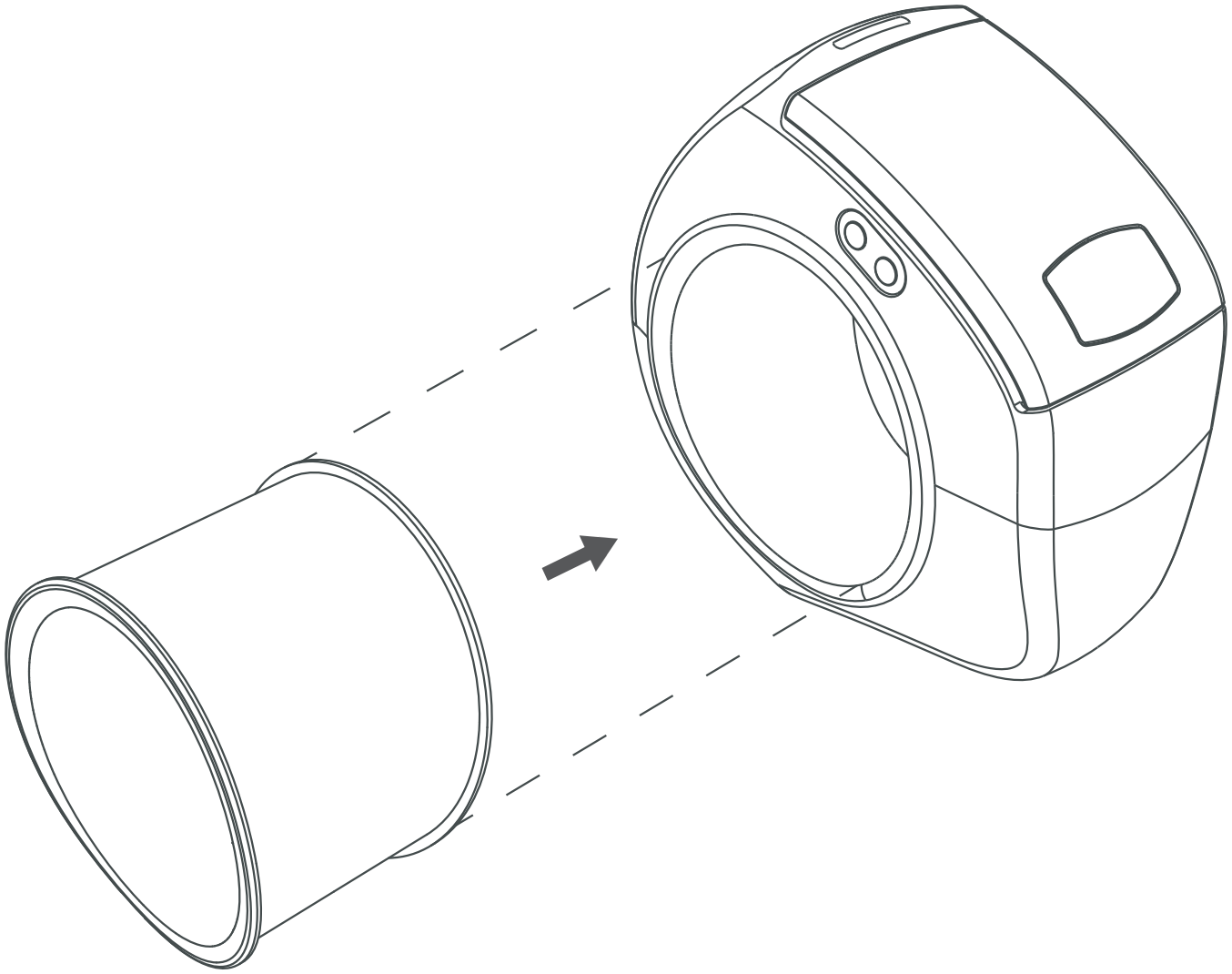

开机 Power on

关机或休眠状态下，按下任意按键唤醒控制器，指示灯每秒闪烁1次，等待蓝牙连接，蓝牙连接成功后指示灯熄灭。

In the shutdown or sleep state, press any key to wake up the controller

休眠和关机 Sleep and shutdown

控制器在无操作 30 秒后，会进入休眠状态，按任意键可继续使用。30 分钟无操作会进入关机状态。

After the controller has no operation for 30s, it will enter a sleep state, and you can continue to use it by pressing any key.

断开连接 Disconnect

触摸板和返回键同时按下 3 秒断开蓝牙连接，控制器进入关机状态。

Touchpad and return key are simultaneously pressed for 3s to disconnect the Bluetooth connection, and the controller is turned off

产品信息　Product Information

Product name：RayNeo Ring

Product model：ARRF60

Wireless connection: Bluetooth

Battery capacity：30mAh

FCC　ID :2ACCJN066

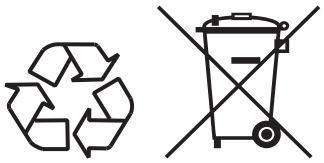

FCC Statement

This device complies with Part 15 of the FCC Rules. Operation is subject to the following two conditions:
(1)This device may not cause harmful interference.
(2)This device must accept any interference received, including interference that may cause undesired operation.
2. Changes or modifications not expressly approved by the party responsible for compliance could void the user's authority to operate the equipment.
Note:This equipment has been tested and found to comply with the limits for a class B digital device,pursuant to Part 15 of the FCC Rules. These limits are designed to provide reasonable protection against harmful interference in a residential installation.

This equipment generates uses and can radiate radio frequence energy and,if not installed and used in accordance with the instructions,may cause harmful interference to radio communications.However,there is no guarantee that interference will not occur in a particular installation.if this equipmemt does cause harmful interference to radio or television reception,which can be determined by turning the equipment off and on,the user is encouraged to try to correct the interference by one or more of the following measures:

- Reorient or relocate the receiving antenna.
- Increase the separation between the equipment and receiver.
- Connect the equipment into an autlet on a circuit different from that to which the receiver is connected.
- Consult the dealer or an experienced radio/TV technician for help.

The device has been evaluated to meet general RF exposure requirement. The device can be used in portable exposure condition without restriction.