RF Test Report

For

Applicant Name:	**TCL Communication Ltd.**
Address:	5/F, Building 22E, 22 Science Park East Avenue, Hong Kong Science Park, Shatin, NT, Hong Kong
EUT Name:	RayNeo X2
Model Number:	ARGT78
Series Model Number:	Refer to Section 2

Issued By

Company Name:	**BTF Testing Lab (Shenzhen) Co., Ltd.**
Address:	F101, 201 and 301, Building 1, Block 2, Tantou Industrial Park, Tantou Community, Songgang Street, Bao'an District, Shenzhen, China
Report Number:	BTF230717R01605
Test Standards:	47 CFR Part 15 Subpart E Section 15.407
FCC ID:	2ACCJN067
Test Conclusion:	Pass
Test Date:	2023-05-20 to 2023-07-26
Date of Issue:	2023-07-26

Prepared By:

elma.yang / Project Engineer

Date: 2023-07-26

Approved By:

Ryan.CJ / EMC Manager

Date: 2023-07-26

Note: All the test results in this report only related to the testing samples. Which can be duplicated completely for the legal use with approval of applicant; it shall not be reproduced except in full without the written approval of BTF Testing Lab (Shenzhen) Co., Ltd., All the objections should be raised within thirty days from the date of issue. To validate the report, you can contact us.

Revision History		
Version	Issue Date	Revisions Content
R_V0	2023-07-26	Original
Note:	*Once the revision has been made, then previous versions reports are invalid.*	

Total or partial reproduction of this document without permission of the Laboratory is not allowed.

BTF Testing Lab (Shenzhen) Co., Ltd.
F101, 201 and 301, Building 1, Block 2, Tantou Industrial Park, Tantou Community, Songgang Street, Bao'an District, Shenzhen, China

Table of Contents

1. Introduction 4
1.1 Identification of Testing Laboratory 4
1.2 Identification of the Responsible Testing Location 4
1.3 Laboratory Condition 4
1.4 Announcement 4
2. Product Information 5
2.1 Application Information 5
2.2 Manufacturer Information 5
2.3 Factory Information 5
2.4 General Description of Equipment under Test (EUT) 5
2.5 Technical Information 6
3. Summary of Test Results 8
3.1 Test Standards 8
3.2 Summary of Test Result 8
4. Test Configuration 9
4.1 Environment Condition 9
4.2 Test Equipment List 9
4.3 Test Auxiliary Equipment 9
5. DFS TEST INFORMATION 10
5.1 DFS test requirement 10
5.2 DFS Detection Thresholds 13
5.3 Radar Test Waveforms 14
6. Test Item 17
6.1 Calibration of Radar Waveform 17
6.2 Channel Move Time, Channel Closing Transmission Time 18
ANNEX A Test Results 20
ANNEX BTEST SETUP PHOTOS 26
ANNEX CEUT EXTERNAL PHOTOS 27
ANNEX DEUT INTERNAL PHOTOS 27

Total or partial reproduction of this document without permission of the Laboratory is not allowed.

BTF Testing Lab (Shenzhen) Co., Ltd.
F101, 201 and 301, Building 1, Block 2, Tantou Industrial Park, Tantou Community, Songgang Street, Bao'an District, Shenzhen, China

1. Introduction

1.1 Identification of Testing Laboratory

Company Name:	BTF Testing Lab (Shenzhen) Co., Ltd.
Address:	F101, 201 and 301, Building 1, Block 2, Tantou Industrial Park, Tantou Community, Songgang Street, Bao'an District, Shenzhen, China

1.2 Identification of the Responsible Testing Location

Test Location:	BTF Testing Lab (Shenzhen) Co., Ltd.
Address:	F101, 201 and 301, Building 1, Block 2, Tantou Industrial Park, Tantou Community, Songgang Street, Bao'an District, Shenzhen, China
Description:	All measurement facilities used to collect the measurement data are located at F101,201 and 301, Building 1, Block 2, Tantou Industrial Park, Tantou Community, Songgang Street, Bao'an District, Shenzhen, China
FCC Registration Number:	518915
Designation Number:	CN1330

1.3 Laboratory Condition

Ambient Temperature:	20℃ to 25℃
Ambient Relative Humidity:	45% to 55%
Ambient Pressure:	100 kPa to 102 kPa

1.4 Announcement

(1) The test report reference to the report template version v0.

(2) The test report is invalid if not marked with the signatures of the persons responsible for preparing, reviewing and approving the test report.

(3) The test report is invalid if there is any evidence and/or falsification.

(4) This document may not be altered or revised in any way unless done so by BTF and all revisions are duly noted in the revisions section.

(5) Content of the test report, in part or in full, cannot be used for publicity and/or promotional purposes without prior written approval from the laboratory.

(6) The laboratory is only responsible for the data released by the laboratory, except for the part provided by the applicant.

Total or partial reproduction of this document without permission of the Laboratory is not allowed.

BTF Testing Lab (Shenzhen) Co., Ltd.
F101, 201 and 301, Building 1, Block 2, Tantou Industrial Park, Tantou Community, Songgang Street, Bao'an District, Shenzhen, China

2. Product Information

2.1 Application Information

Company Name:	TCL Communication Ltd.
Address:	5/F, Building 22E, 22 Science Park East Avenue, Hong Kong Science Park, Shatin, NT, Hong Kong

2.2 Manufacturer Information

Company Name:	Falcon innovations Technology (Shenzhen) Co., Ltd
Address:	5th Floor, Building D4, TCL International E City, no.1001 zhongshan Yuan Road, Nanshan District, Shenzhen,China

2.3 Factory Information

Company Name:	TCL Mobile Communication Co., LTD
Address:	No.86, Hechang 7th West Road ,Zhong Kai Hi-tech Development District, Hui Zhou, Guang Dong

2.4 General Description of Equipment under Test (EUT)

EUT Name	RayNeo X2
Under Test Model Name	ARGT78
Series Model Name	/
Hardware Version	V03

Total or partial reproduction of this document without permission of the Laboratory is not allowed.

BTF Testing Lab (Shenzhen) Co., Ltd.
F101, 201 and 301, Building 1, Block 2, Tantou Industrial Park, Tantou Community, Songgang Street, Bao'an District, Shenzhen, China

2.5 Technical Information

Modulation technology	OFDM
Modulation Type	BPSK, QPSK, 16QAM, 64QAM, 256QAM
Function	☐ Outdoor AP ☐ Indoor AP ☐ Fixed P2P ☒ Client
DFS type	☐ Master ☐ Slave with radar detection ☒ Slave without radar detection
Operation Frequency Range	U-NII Band 2A: 5.26~5.32 GHz NII Band 2C:5500 to 5700MHz
Frequency Block	U-NII Band 2A: 5.25~5.35 GHz U-NII Band 2C: 5.5~5.7 GHz
Channel Bandwidth	802.11a: 20 MHz 802.11n: 20 MHz, 40 MHz 802.11ac:20MHz,40Mhz,80MHz,160MHz
Antenna Type	FPC antenna
Antenna Gain#	5250-5350: 0.3dBi 5500-5700: 0.7dBi
Antenna Impedance	50Ω
Antenna System (MIMO Smart Antenna)	N/A

Note:

#: The antenna gain provided by the applicant, and the laboratory will not be responsible for the accumulated calculation results which covers the information provided by the applicant.

According to section 15.31(m), regards to the operating frequency range over 10 MHz, must select three channels which were tested. The Lowest frequency, the middle frequency, and the highest frequency of channel were selected to perform the test, please see the below .

Band	Test Channel	20MHz		40MHz		80MHz	
		Channel	Frequency (MHz)	Channel	Frequency (MHz)	Channel	Frequency (MHz)
U-NII-2A	CH_L	52	5260	54	5270	-	-
	CH_M	56	5280	-	-	58	5290
	CH_H	64	5320	62	5310	-	-
U-NII-2C	CH_L	100	5500	102	5510	106	5530
	CH_M	116	5580	110	5550	122	5610
	CH_H	140	5700	134	5670	138	5690
	CH_{H1}	144	5720	142	5710		

Band	Test Channel	160MHz	
		Channel	Frequency (MHz)

Total or partial reproduction of this document without permission of the Laboratory is not allowed.

BTF Testing Lab (Shenzhen) Co., Ltd.
F101, 201 and 301, Building 1, Block 2, Tantou Industrial Park, Tantou Community, Songgang Street, Bao'an District, Shenzhen, China

U-NII-2A	CH_L	50	5250
U-NII-2C	CH_L	114	5570

Total or partial reproduction of this document without permission of the Laboratory is not allowed.

BTF Testing Lab (Shenzhen) Co., Ltd.
F101, 201 and 301, Building 1, Block 2, Tantou Industrial Park, Tantou Community, Songgang Street, Bao'an District, Shenzhen, China

3. Summary of Test Results

3.1 Test Standards

No.	Identity	Document Title
1	47 CFR Part 15 Subpart E Section 15.407	Unlicensed National Information Infrastructure Devices
2	KDB905462 D02 v02	COMPLIANCE MEASUREMENT PROCEDURES FOR UNLICENSED-NATIONAL INFORMATION INFRASTRUCTURE DEVICES OPERATING IN THE 5250-5350 MHz AND 5470-5725 MHz BANDS INCORPORATING DYNAMIC FREQUENCY SELECTION
3	KDB905462 D03 v01r02	U-NII CLIENT DEVICES WITHOUT RADAR DETECTION CAPABILITY
4	KDB905462 D04 v01	OPERATIONAL MODES SUGGESTED FOR DFS TESTING

3.2 Summary of Test Result

No.	Description	FCC Part No.	Test Result	Test By	Verdict	Remark
1	Calibration of Radar Waveform	15.407(i)	ANNEX A.1	Gavin Cui	Pass	--
2	Channel Move Time, Channel Closing Transmission Time	15.407(i)	ANNEX A.2	Gavin Cui	Pass	--

Total or partial reproduction of this document without permission of the Laboratory is not allowed.

BTF Testing Lab (Shenzhen) Co., Ltd.
F101, 201 and 301, Building 1, Block 2, Tantou Industrial Park, Tantou Community, Songgang Street, Bao'an District, Shenzhen, China

4. Test Configuration

4.1 Environment Condition

Environment Parameter	Selected Values During Tests			
	Temperature	Voltage	Relative Humidity	Ambient Pressure
Normal Temperature, Normal Voltage (NTNV)	20°C to 25°C	DC 5V from Adapter	30% to 60%	100 kPa to 102 kPa

4.2 Test Equipment List

Conducted Method Test						
Description	Manufacturer	Model	Serial No.	Cal. Date	Cal. Due	Use
MXA Signal Analyzer	KEYSIGHT	N9020A	MY50410020	2022.11.24	2023.11.23	☒
WIDEBAND RADIO COMMNUNICATION TESTER	Rohde & Schwarz	CMW500	161997	2022.11.24	2023.11.23	☒
ESG VECTOR SIGNAL GENERATOR	Agilent	E4438C	MY45094854	2022.11.24	2023.11.23	☒
MXG Vector Signal Generator	Agilent	N5182A	MY46240163	2022.11.24	2023.11.23	☒
Adjustable Direct Current Regulated Power Supply	Dongguan Tongmen Electronic Technology Co., LTD	etm-6050c	20211026123	2022.11.25	2023.11.24	☒
RF Control Unit	TST	TST-Full	S01	/	/	☒
RF Test software	TST	V2.0	/	/	/	☒

4.3 Test Auxiliary Equipment

Description	Manufacturer	Model	FCC ID	Use
Wireless AC3100	ASUS	RT-AC88U	MSQ-RTGW00	☒
Notebook	Dell Inc.	Inspiron 13-5368	/	☒

Total or partial reproduction of this document without permission of the Laboratory is not allowed.

BTF Testing Lab (Shenzhen) Co., Ltd.
F101, 201 and 301, Building 1, Block 2, Tantou Industrial Park, Tantou Community, Songgang Street, Bao'an District, Shenzhen, China

5. DFS TEST INFORMATION

5.1 DFS test requirement

The following table from FCC KDB905462 D02 UNII DFS Compliance procedures new rules list the applicable requirements for the DFS testing.

Table 1: Applicability of DFS Requirements Prior to Use of a Channel

Requirement	Operational Mode		
	Master	Client Without Radar Detection	Client With Radar Detection
Non-Occupancy Period	Yes	Not required	Yes
DFS Detection Threshold	Yes	Not required	Yes
Channel Availability Check Time	Yes	Not required	Not required
U-NII Detection Bandwidth	Yes	Not required	Yes

Table 2: Applicability of DFS requirements during normal operation

Requirement	Operational Mode	
	Master Device or Client with Radar Detection	Client Without Radar Detection
DFS Detection Threshold	Yes	Not required
Channel Closing Transmission Time	Yes	Yes
Channel Move Time	Yes	Yes
U-NII Detection Bandwidth	Yes	Not required

Additional requirements for devices with multiple bandwidth modes	Master Device or Client with Radar Detection	Client Without Radar Detection
U-NII Detection Bandwidth and Statistical Performance Check	All BW modes must be tested	Not required
Channel Move Time and Channel Closing Transmission Time	Test using widest BW mode available	Test using the widest BW mode available for the link
All other tests	Any single BW mode	Not required
Note: Frequencies selected for statistical performance check (Section 7.8.4) should include several frequencies within the radar detection bandwidth and frequencies near the edge of the radar detection bandwidth. For 802.11 devices it is suggested to select frequencies in each of the bonded 20 MHz channels and the channel center frequency.		

Total or partial reproduction of this document without permission of the Laboratory is not allowed.

BTF Testing Lab (Shenzhen) Co., Ltd.
F101, 201 and 301, Building 1, Block 2, Tantou Industrial Park, Tantou Community, Songgang Street, Bao'an District, Shenzhen, China

Master Devices

a) The Master Device will use DFS in order to detect Radar Waveforms with received signal strength above the DFS Detection Threshold in the 5250~5350 MHz and 5470~5725 MHz bands. DFS is not required in the 5150~5250 MHz or 5725~5825 MHz bands.

b) Before initiating a network on a Channel, the Master Device will perform a Channel Availability Check for a specified time duration (Channel Availability Check Time) to ensure that there is no radar system operating on the Channel, using DFS described under subsection a) above.

c) The Master Device initiates a U-NII network by transmitting control signals that will enable other U-NII devices to Associate with the Master Device.

d) During normal operation, the Master Device will monitor the Channel (In-Service Monitoring) to ensure that there is no radar system operating on the Channel, using DFS described under a).

e) If the Master Device has detected a Radar Waveform during In-Service Monitoring as described under d), the Operating Channel of the U-NII network is no longer an Available Channel. The Master Device will instruct all associated Client Device(s) to stop transmitting on this Channel within the Channel Move Time. The transmissions during the Channel Move Time will be limited to the Channel Closing Transmission Time.

f) Once the Master Device has detected a Radar Waveform it will not utilize the Channel for the duration of the Non-Occupancy Period.

g) If the Master Device delegates the In-Service Monitoring to a Client Device, then the combination will be tested to the requirements described under d) through f) above.

h)

Client Devices

a) A Client Device will not transmit before having received appropriate control signals from a Master Device.

b) A Client Device will stop all its transmissions whenever instructed by a Master Device to which it is associated and will meet the Channel Move Time and Channel Closing Transmission Time requirements. The Client Device will not resume any transmissions until it has again received control signals from a Master Device.

c) If a Client Device is performing In-Service Monitoring and detects a Radar Waveform above the DFS Detection Threshold, it will inform the Master Device. This is equivalent to the Master Device detecting the Radar Waveform and d) through f) of section 5.1.1 apply.

d) Irrespective of Client Device or Master Device detection the Channel Move Time and Channel Closing Transmission Time requirements remain the same.

e) The client test frequency must be monitored to ensure no transmission of any type has occurred for 30 minutes. Note: If the client moves with the master, the device is considered compliant if nothing appears in the client non-occupancy period test. For devices that shut down (rather than moving channels), no beacons should appear.

Total or partial reproduction of this document without permission of the Laboratory is not allowed.

BTF Testing Lab (Shenzhen) Co., Ltd.
F101, 201 and 301, Building 1, Block 2, Tantou Industrial Park, Tantou Community, Songgang Street, Bao'an District, Shenzhen, China

Table 4: DFS Response Requirement Values

Paramenter	Value
Non-occupancy period	Minimum 30 minutes
Channel Availability Check Time	60 seconds
Channel Move Time	10 seconds See Note 1.
Channel Closing Transmission Time	200 milliseconds + an aggregate of 60 milliseconds over remaining 10 second period. See Notes 1 and 2.
U-NII Detection Bandwidth	Minimum 100% of the U-NII 99% transmission power bandwidth. See Note 3.

Note 1: Channel Move Time and the Channel Closing Transmission Time should be performed with Radar Type 0. The measurement timing begins at the end of the Radar Type 0 burst.

Note 2: The Channel Closing Transmission Time is comprised of 200 milliseconds starting at the beginning of the Channel Move Time plus any additional intermittent control signals required facilitating a Channel move (an aggregate of 60 milliseconds) during the remainder of the 10 second period. The aggregate duration of control signals will not count quiet periods in between transmissions.

Note 3: During the U-NII Detection Bandwidth detection test, radar type 0 should be used. For each frequency step the minimum percentage of detection is 90 percent. Measurements are performed with no data traffic.

Total or partial reproduction of this document without permission of the Laboratory is not allowed.

BTF Testing Lab (Shenzhen) Co., Ltd.
F101, 201 and 301, Building 1, Block 2, Tantou Industrial Park, Tantou Community, Songgang Street, Bao'an District, Shenzhen, China

5.2 DFS Detection Thresholds

Table 3: DFS Detection Thresholds for Master Devices and Client Devices With Radar Detection

Maximum Transmit Power	Value (See Notes 1, 2, and 3)
EIRP ≥ 200 milliwatt	-64 dBm
EIRP < 200 milliwatt and power spectral density < 10 dBm/MHz	-62 dBm
EIRP < 200 milliwatt that do not meet the power spectral density requirement	-64 dBm
Note 1: This is the level at the input of the receiver assuming a 0 dBi receive antenna. Note 2: Throughout these test procedures an additional 1 dB has been added to the amplitude of the test transmission waveforms to account for variations in measurement equipment. This will ensure that the test signal is at or above the detection threshold level to trigger a DFS response. Note3: EIRP is based on the highest antenna gain. For MIMO devices refer to KDB Publication 662911 D01.	

Total or partial reproduction of this document without permission of the Laboratory is not allowed.

BTF Testing Lab (Shenzhen) Co., Ltd.
F101, 201 and 301, Building 1, Block 2, Tantou Industrial Park, Tantou Community, Songgang Street, Bao'an District, Shenzhen, China

5.3 Radar Test Waveforms

This section provides the parameters for required test waveforms, minimum percentage of successful detections, and the minimum number of trials that must be used for determining DFS conformance. Step intervals of 0.1 microsecond for Pulse Width, 1 microsecond for PRI, 1 MHz for chirp width and 1 for the number of pulses will be utilized for the random determination of specific test waveforms.

Table 5 Short Pulse Radar Test Waveforms

Radar Type	Pulse Width (µsec)	PRI (µsec)	Number of Pulses	Minimum Percentage of Successful Detection	Minimum Number of Trials
0	1	1428	18	See Note 1	See Note 1
1	1	Test A: 15 unique PRI values randomly selected from the list of 23 PRI values in Table 5a	$\text{Roundup}\left\{\left(\frac{1}{360}\right)\cdot\left(\frac{19\cdot 10^6}{\text{PRI}_{\mu sec}}\right)\right\}$	60%	30
		Test B: 15 unique PRI values randomly selected within the range of 518-3066 µsec, with a minimum increment of 1 µsec, excluding PRI values selected in Test A			
2	1-5	150-230	23-29	60%	30
3	6-10	200-500	16-18	60%	30
4	11-20	200-500	12-16	60%	30
Aggregate (Radar Types 1-4)				80%	120
Note 1: Short Pulse Radar Type 0 should be used for the detection bandwidth test, channel move time, and channel closing time tests.					

A minimum of 30 unique waveforms are required for each of the Short Pulse Radar Types 2 through 4. If more than 30 waveforms are used for Short Pulse Radar Types 2 through 4, then each additional waveform must also be unique and not repeated from the previous waveforms. If more than 30 waveforms are used for Short Pulse Radar Type 1, then each additional waveform is generated with Test B and must also be unique and not repeated from the previous waveforms in Tests A or B.

For example if in Short Pulse Radar Type 1 Test B a PRI of 3066 µsec is selected, the number of pulses would be Round up $\left\{\left(\frac{1}{360}\right)\cdot\left(\frac{19\cdot 10^6}{3066}\right)\right\}$ = Round up {17.2} = 18.

Total or partial reproduction of this document without permission of the Laboratory is not allowed.

BTF Testing Lab (Shenzhen) Co., Ltd.
F101, 201 and 301, Building 1, Block 2, Tantou Industrial Park, Tantou Community, Songgang Street, Bao'an District, Shenzhen, China

Table 5a - Pulse Repetition Intervals Values for Test A

Pulse Repetition Frequency Number	Pulse Repetition Frequency (Pulses Per Second)	Pulse Repetition Interval (Microseconds)
1	1930.5	518
2	1858.7	538
3	1792.1	558
4	1730.1	578
5	1672.2	598
6	1618.1	618
7	1567.4	638
8	1519.8	658
9	1474.9	678
10	1432.7	698
11	1392.8	718
12	1355	738
13	1319.3	758
14	1285.3	778
15	1253.1	798
16	1222.5	818
17	1193.3	838
18	1165.6	858
19	1139	878
20	1113.6	898
21	1089.3	918
22	1066.1	938
23	326.2	3066

Table 6 – Long Pulse Radar Test Waveform

Radar Type	Pulse Width (µsec)	Chirp Width (MHz)	PRI (µsec)	Number of Pulses per Burst	Number of Bursts	Minimum Percentage of Successful Detection	Minimum Number of Trials
5	50-100	5-20	1000-2000	1-3	8-20	80%	30

The parameters for this waveforms are randomly chosen. Thirty unique waveforms are required for the Long Pulse Radar Type waveforms. If more than 30 waveforms are used for the Long Pulse Radar Type wave forms, then each additional waveform must also be unique and not repeated from the previous waveforms.

Total or partial reproduction of this document without permission of the Laboratory is not allowed.

BTF Testing Lab (Shenzhen) Co., Ltd.
F101, 201 and 301, Building 1, Block 2, Tantou Industrial Park, Tantou Community, Songgang Street, Bao'an District, Shenzhen, China

Table 7 – Frequency Hopping Radar Test Waveform

Radar Type	Pulse Width (µsec)	PRI (µsec)	Pulses per Hop	Hopping Rate (kHz)	Hopping Sequence Length (msec)	Minimum Percentage of Successful Detection	Minimum Number of Trials
6	1	333	9	0.333	300	70%	30

For the Frequency Hopping Radar Type, the same Burst parameters are used for each wave form. The hopping sequence is different for each wave form and a 100-length segment is selected from the hopping sequence defined by the following algorithm:

The first frequency in a hopping sequence is selected randomly from the group of 475 integer frequencies from 5250–5724MHz.Next,the frequency that was just chosen is removed from the group and a frequency is randomly selected from the remaining 474 frequencies in the group. This process continues until all 475 frequencies are chosen for the set. For selection of a random frequency, the frequencies remaining within the group are always treated as equally likely.

Total or partial reproduction of this document without permission of the Laboratory is not allowed.

BTF Testing Lab (Shenzhen) Co., Ltd.
F101, 201 and 301, Building 1, Block 2, Tantou Industrial Park, Tantou Community, Songgang Street, Bao'an District, Shenzhen, China

6. Test Item

6.1 Calibration of Radar Waveform

6.1.1 TEST CONFIGURATION

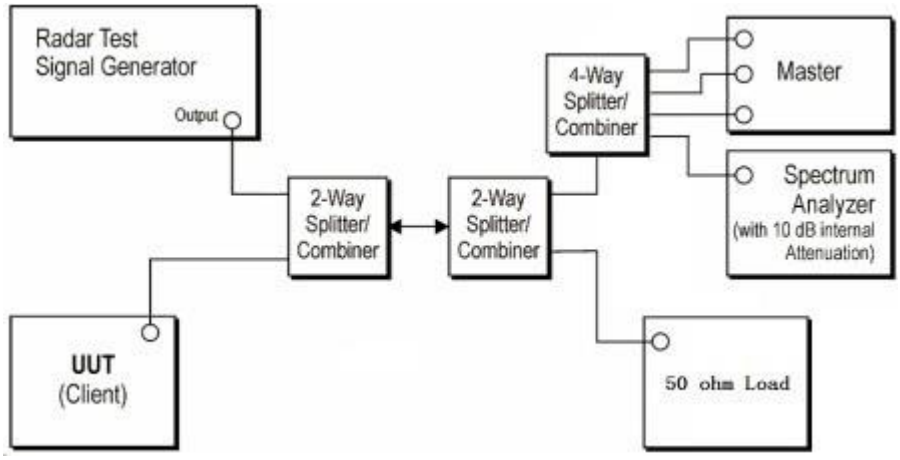

6.1.2 Test Procedure

a) A 50 ohm load is connected in place of the spectrum analyzer, and the spectrum analyzer is connected to place of the master

b) The interference Radar Detection Threshold Level is -62dBm + 0dBi +1dB = -61dBm that had been taken into account the output power range and antenna gain.

c) The following equipment setup was used to calibrate the conducted radar waveform. A vector signal generator was utilized to establish the test signal level for radar type 0. During this process there were no transmissions by either the master or client device. The spectrum analyzer was switched to the zero spans (time domain) at the frequency of the radar waveform generator. Peak detection was used. The spectrum analyzer resolution bandwidth (RBW) and video bandwidth (VBW) were set to 3MHz. The spectrum analyzer had offset -1.0dB to compensate RF cable loss 1.0dB.

d) The vector signal generator amplitude was set so that the power level measured at the spectrum analyzer was -62dBm + 0dBi +0.7dB = -61.3dBm. Capture the spectrum analyzer plots on short pulse radar waveform.

6.1.3 Test Result

Please refer to ANNEX A.1

Total or partial reproduction of this document without permission of the Laboratory is not allowed.

BTF Testing Lab (Shenzhen) Co., Ltd.
F101, 201 and 301, Building 1, Block 2, Tantou Industrial Park, Tantou Community, Songgang Street, Bao'an District, Shenzhen, China

6.2 Channel Move Time, Channel Closing Transmission Time

6.2.1 TEST CONFIGURATION

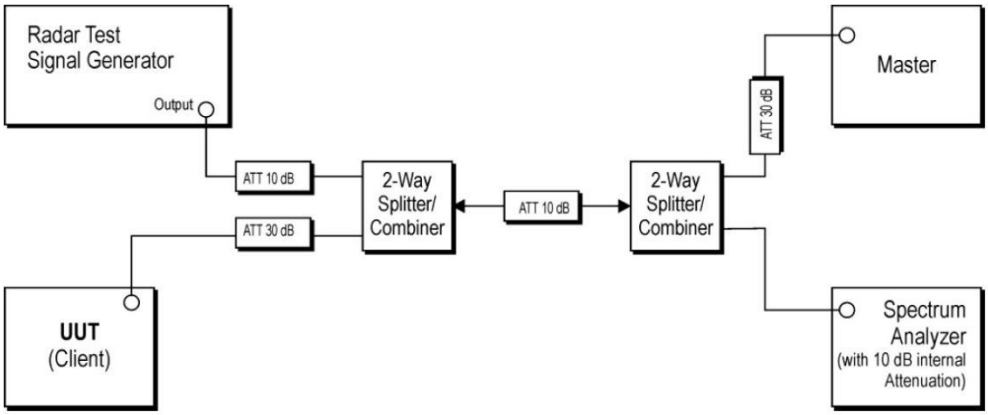

6.2.2 Test Procedure

a) The radar pulse generator is setup to provide a pulse at frequency that the master and client are operating. A type 0 radar pulse with a 1us pulse width and a 1428us PRI is used for the testing.

b) The vector signal generator is adjusted to provide the radar burst (18 pulses) at the level of approximately -61dBm at the antenna port of the master device.

c) A trigger is provided from the pulse generator to the DFS monitoring system in order to capture the traffic and the occurrence of the radar pulse.

d) EUT will associate with the master at channel. The file “iperf.exe” specified by the FCC is streamed from the PC 2 through the master and the client device to the PC 1 and played in full motion video using Media Player Classic Ver. 6.4.8.6 in order to properly load the network for the entire period of the test.

e) When radar burst with a level equal to the DFS Detection Threshold +1dB is generated on the operating channel of the U-NII device. At time T0 the radar waveform generator sends a burst of pulse of the radar waveform at Detection Threshold +1dB.

f) Observe the transmissions of the EUT at the end of the radar Burst on the Operating Channel Measure and record the transmissions from the UUT during the observation time (Channel Move Time). One 15 seconds plot is reported for the Short Pulse Radar Type 0. The plot for the Short Pulse Radar Types start at the end of the radar burst. The Channel Move Time will be calculated based on the zoom in 600ms plot of the Short Pulse Radar Type

g) Measurement of the aggregate duration of the Channel Closed Transmission Time method. With the spectrum analyzer set to zero span tuned to the center frequency of the EUT operating channel at the radar simulated

Total or partial reproduction of this document without permission of the Laboratory is not allowed.

BTF Testing Lab (Shenzhen) Co., Ltd.
F101, 201 and 301, Building 1, Block 2, Tantou Industrial Park, Tantou Community, Songgang Street, Bao'an District, Shenzhen, China

frequency, peak detection, and max hold, the dwell time per bin is given by: Dwell (0.3ms) =S (12000ms) / B (4000); where Dwell is the dwell time per spectrum analyzer sampling bin, S is sweep time and B is the number of spectrum analyzer sampling bins. An upper bound of the aggregate duration of the intermittent control signals of Channel Closing Transmission Time is calculated by: C (ms)= N X Dwell (0.3ms); where C is the Closing Time, N is the number of spectrum analyzer sampling bins (intermittent control signals) showing a U-NII transmission and Dwell is the dwell time per bin.

h) Measurement the EUT for more than 30 minutes following the channel move time to verify that no transmission or beacons occur on this channel.

6.2.3 Test Result

Please refer to ANNEX A.2

Total or partial reproduction of this document without permission of the Laboratory is not allowed.

BTF Testing Lab (Shenzhen) Co., Ltd.
F101, 201 and 301, Building 1, Block 2, Tantou Industrial Park, Tantou Community, Songgang Street, Bao'an District, Shenzhen, China

ANNEX A Test Results

1. Signal Calibration

1.1 SC

1.1.1 Test Result

Band UNII-2A and UNII-2C							
Mode	Bandwidth (MHz)	Frequency (MHz)	Radar Signal		Signal Calibration		Verdict
			Type	Trial Id	Result	Limit	
802.11ac	160	5250	0	0	Refer To Test Graph		Pass
802.11ac	160	5570	0	0	Refer To Test Graph		Pass

Total or partial reproduction of this document without permission of the Laboratory is not allowed.

BTF Testing Lab (Shenzhen) Co., Ltd.
F101, 201 and 301, Building 1, Block 2, Tantou Industrial Park, Tantou Community, Songgang Street, Bao'an District, Shenzhen, China

1.1.2 Test Graph

Signal Calibration_802.11a_UNII-2A_5250MHz_RadarType0_Trial0

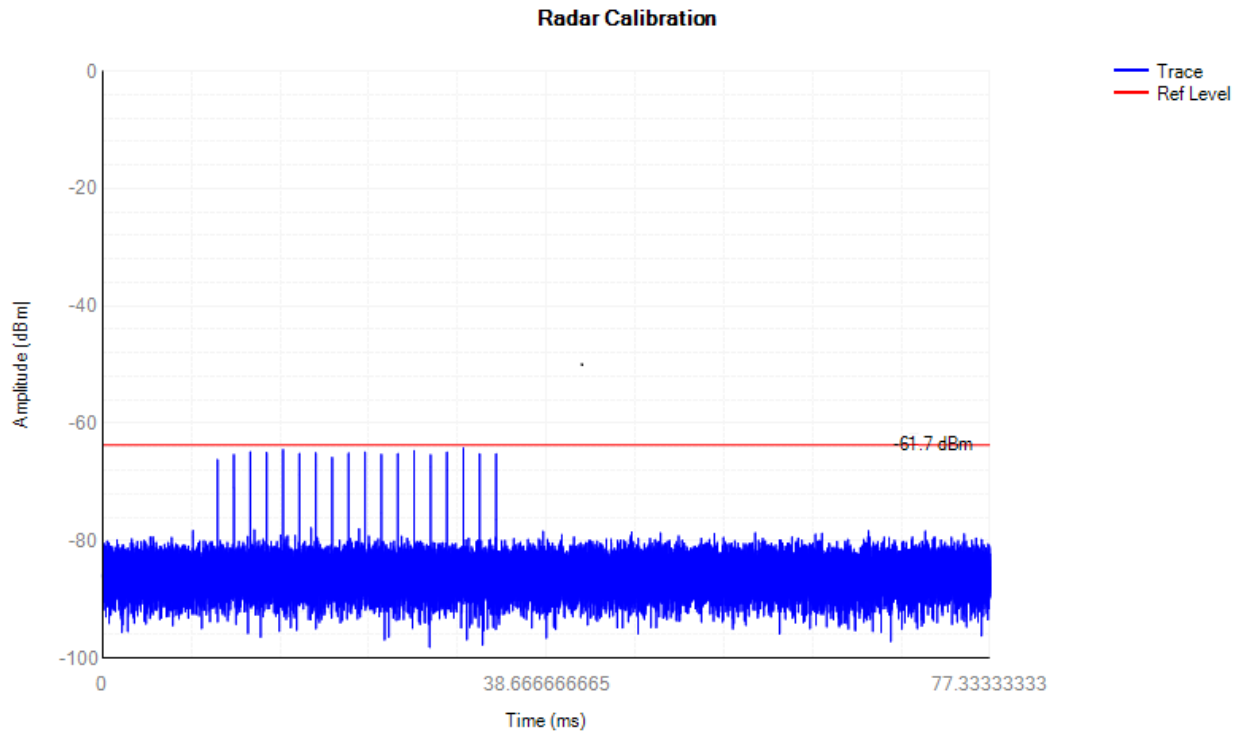

Signal Calibration_802.11a_UNII-2C_5570MHz_RadarType0_Trial0

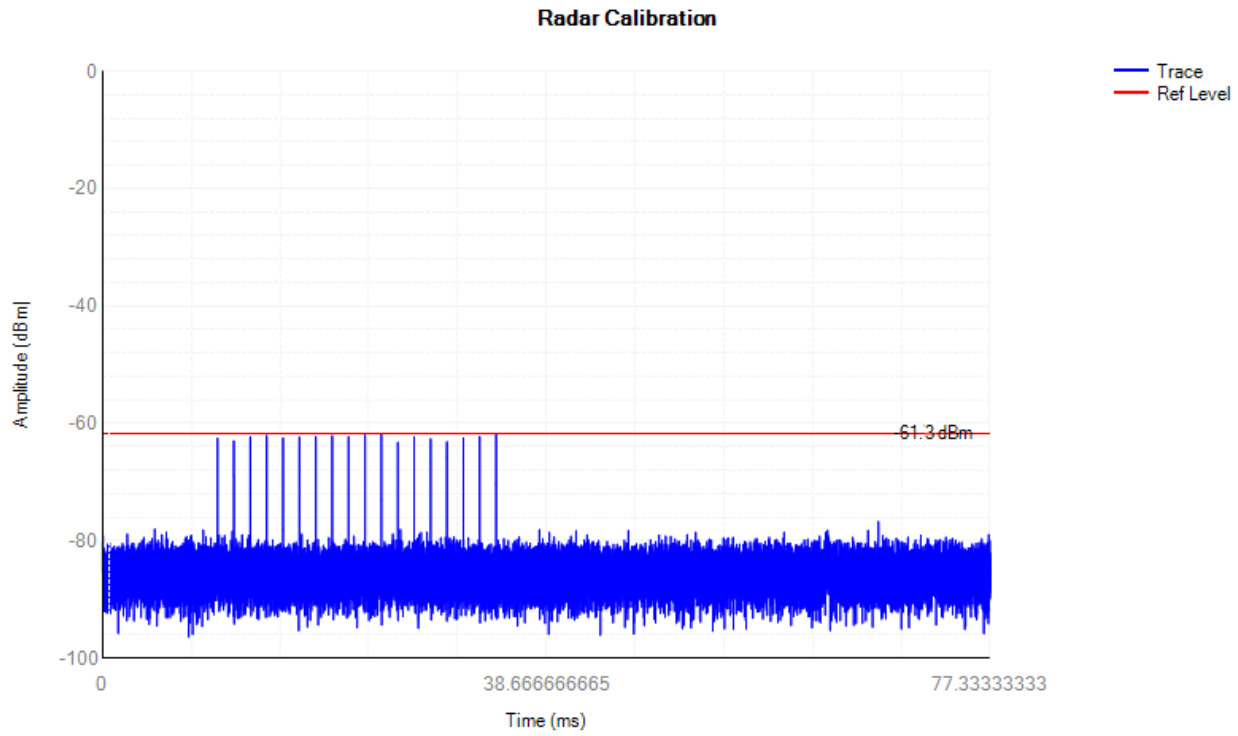

2. Channel Move Time and Closing Transmission Time

2.1 CMT_CTT

2.1.1 Test Result

Band UNII-2A and UNII-2C					
Mode	Bandwidth (MHz)	Frequency (MHz)	Channel Move Time and Closing Transmission Time		Verdict
			Result	Limit	
802.11ac	160	5250	Refer To Test Graph		Pass
802.11ac	160	5570	Refer To Test Graph		Pass

Total or partial reproduction of this document without permission of the Laboratory is not allowed.

BTF Testing Lab (Shenzhen) Co., Ltd.
F101, 201 and 301, Building 1, Block 2, Tantou Industrial Park, Tantou Community, Songgang Street, Bao'an District, Shenzhen, China

2.1.2 Test Graph

Channel Move Time and Closing Transmission Time_802.11ac_UNII-2A_5250MHz

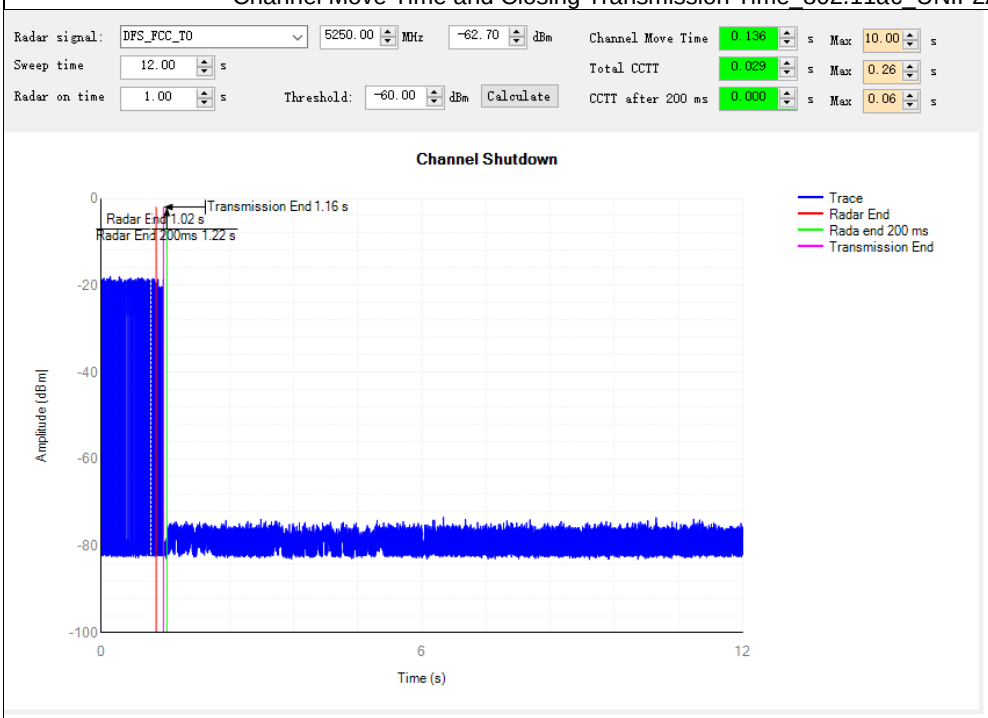

Channel Move Time and Closing Transmission Time_802.11ac_UNII-2C_5570MHz

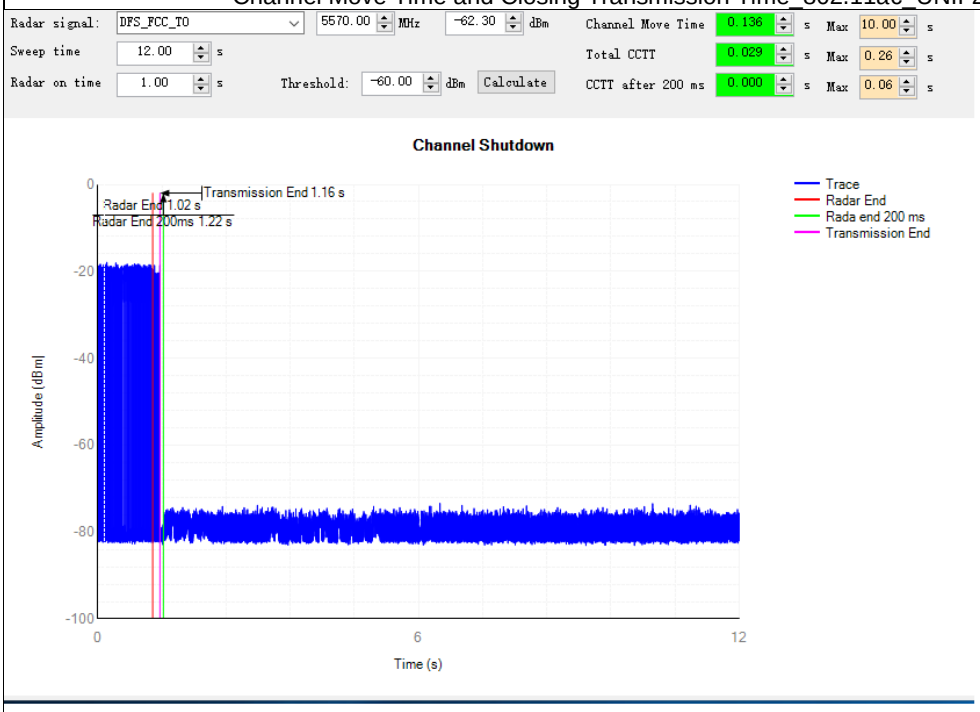

ANNEX B TEST SETUP PHOTOS

ANNEX C EUT EXTERNAL PHOTOS

Please refer to Report BTF230717R01601

ANNEX D EUT INTERNAL PHOTOS

Please refer to Report BTF230717R01601

Total or partial reproduction of this document without permission of the Laboratory is not allowed.

BTF Testing Lab (Shenzhen) Co., Ltd.
F101, 201 and 301, Building 1, Block 2, Tantou Industrial Park, Tantou Community, Songgang Street, Bao'an District, Shenzhen, China

BTF Testing Lab (Shenzhen) Co., Ltd.

F101, 201 and 301, Building 1, Block 2, Tantou Industrial Park, Tantou Community, Songgang Street, Bao'an District, Shenzhen, China

www.btf-lab.com

--END OF REPORT--

Total or partial reproduction of this document without permission of the Laboratory is not allowed.