EH-MW24

Datasheet

V0.1

Copyright© 2022 Ehong Information Technology Co. Ltd. All rights reserved.

Table of Contents

1 Product Overview 4

2 Hardware Specification 5

2.1 Block Diagram 5

2.1.1 Internal PA Design Block Diagram 5

2.1.2 External PA Design Block Diagram 6

2.2 Pinout Description 6

2.2.1 Pin Map 6

2.2.2 Pin Definition 7

2.2.3 IO Pin Mux Table 9

2.3 Peripheral Interfaces 10

2.4 Bootstrap Signals 10

2.4.1 Bootstrap Mode 10

2.4.2 JTAG Mode 10

2.4.3 XTAL Mode 10

2.4.4 32.768KHz Sleep Clock Mode 11

3 Electrical Characteristics 12

3.1 Absolute Maximum Ratings 12

3.2 Recommended Operating Conditions 12

3.3 DC Electrical Characteristics 12

4 Radio Performance 13

4.1 BLE Radio Characteristics 13

4.2 802.15.4 Radio Characteristics 13

5 Mechanical Specification 14

5.1 Dimensional View 14

5.2 Pad Dimension 14

6 Development Kit 16

6.1 Overview 16

6.1.1 Hostless Mode 16

6.1.2 Hosted Mode 16

6.2 Hostless Development Kit 18

6.2.1 Hardware Configuration 18

6.2.2 Block Diagram 20

6.2. 3 Dimension 21

6.3 Hosted Development Kit (Pmod Adapter) 22

6.3.1 Hardware Configuration 22

6.3.2 Block Diagram 24

6.3.3 Dimension 24

6.4 Hosted Development Kit (Android Shield) 24

7 Manufacturing Recommendation 25

7.1 Power Layout Guideline 25

7.2 RF Layout Guideline 25

7.3 Soldering Recommendations 25

8 Packaging 27

9 Regulatory Compliance 28

10 Order Information 29

1 Product Overview

Powered by the widely-deployed Qualcomm BLE 5 and 802.15.4 combo QCA4024 wireless MCU, the Ehong EH-MW24 IoT connectivity stamp module is purpose-built for IoT applications that are running on top of ZigBee or Thread over 802.15.4. Additional BLE 5 support can be used for commissioning or any other applications utilizing BLE mesh connectivity.

EH-MW24 has a dedicated Cortex-M0 microcontroller with 128KB SRAM and 384KB ROM to act as a communication processor (CP) to handle BLE and 802.15.4 at MAC/PHY layer as well as a dedicated Cortex-M4F microcontroller with 704KB SRAM (328KB for applications) and 512KB ROM to function as an application processor (AP) to run 802.15.4 upper layer protocol stacks like ZigBee and Thread, application layer protocols and IoT applications. Cortex-M0 with dedicated memory can also be used as a security processor (SP) to enable trusted execution environment (TEE) for enhanced security which is getting more and more critical to IoT applications.

EH-NW24 supports both ZigBee 3.0 (ZigBee PRO 2017 R22) and OpenThread 1.1 upper layer protocol stacks built on top of 802.15.4. QCA4024 at the core of EH-MW24 is a Thread certified component. With the latest matter from CSA gaining market traction and industry adoption, matter over Thread is being also added into EH-MW24 to enable easier and quicker time-to-market to build matter certified devices.

EH-MW24 is design-optimized to minimize module footprint in order to fit into space constraint applications. It also offers internal on-chip power amplifier and external power amplifier options as well as supports either U.FL or PCB antenna with the same pin compatible form factor.

EN-MW24 has undergone vigorous regulatory compliance tests and design fine-tuning and passed all major international regulatory certifications such as FCC, IC, CE, UKCA, SRRC, MIC, KCC, etc. It also environmentally complies with RoHS and WEEE.

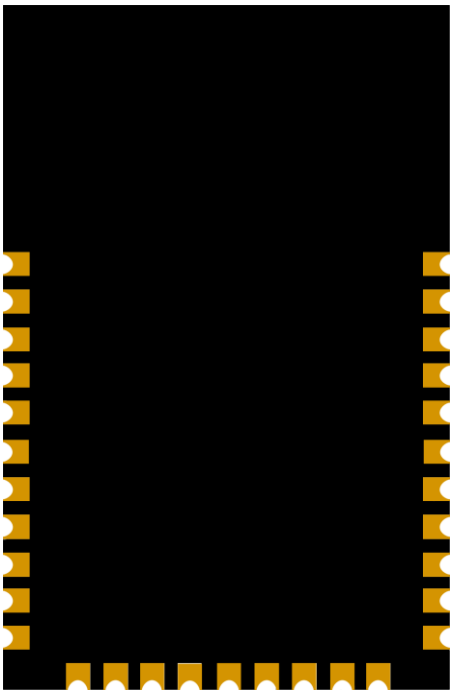

2 Hardware Specification

This section provides detailed hardware design and specification of EH-MW24 module. Overall hardware design was optimized for smaller footprint and maximized cost saving.

2.1 Block Diagram

EH-MW24 is powered by Qualcomm QCA4024 with an integrated 4MB flash, an 40MHz XTAL as well as discrete RF components. The design has option to add an external power amplifier for BLE and 802.15.4 to achieve max Tx power +20 dBm. The block diagram is shown below.

2.1.1 Internal PA Design Block Diagram

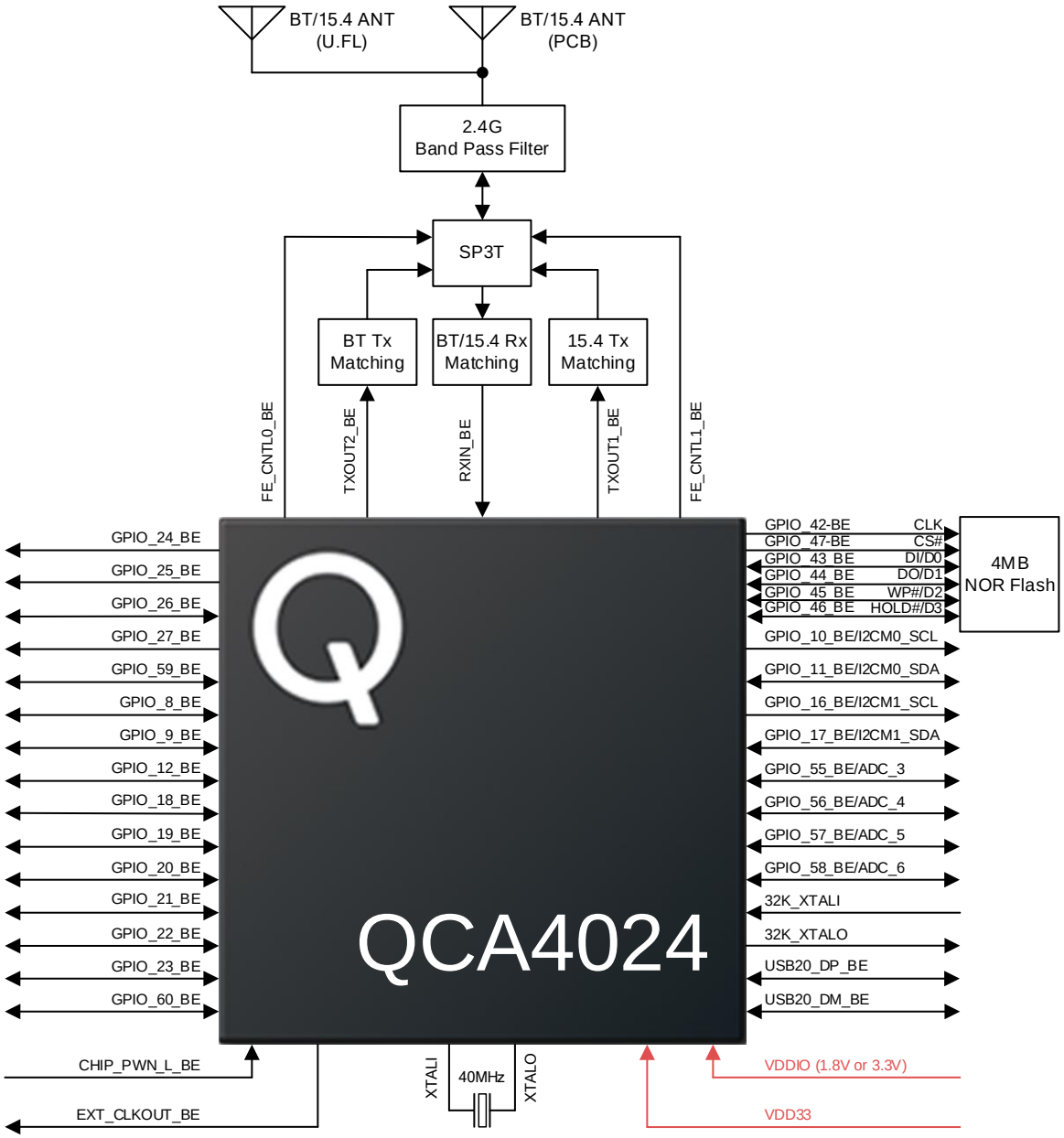

2.1.2 External PA Design Block Diagram

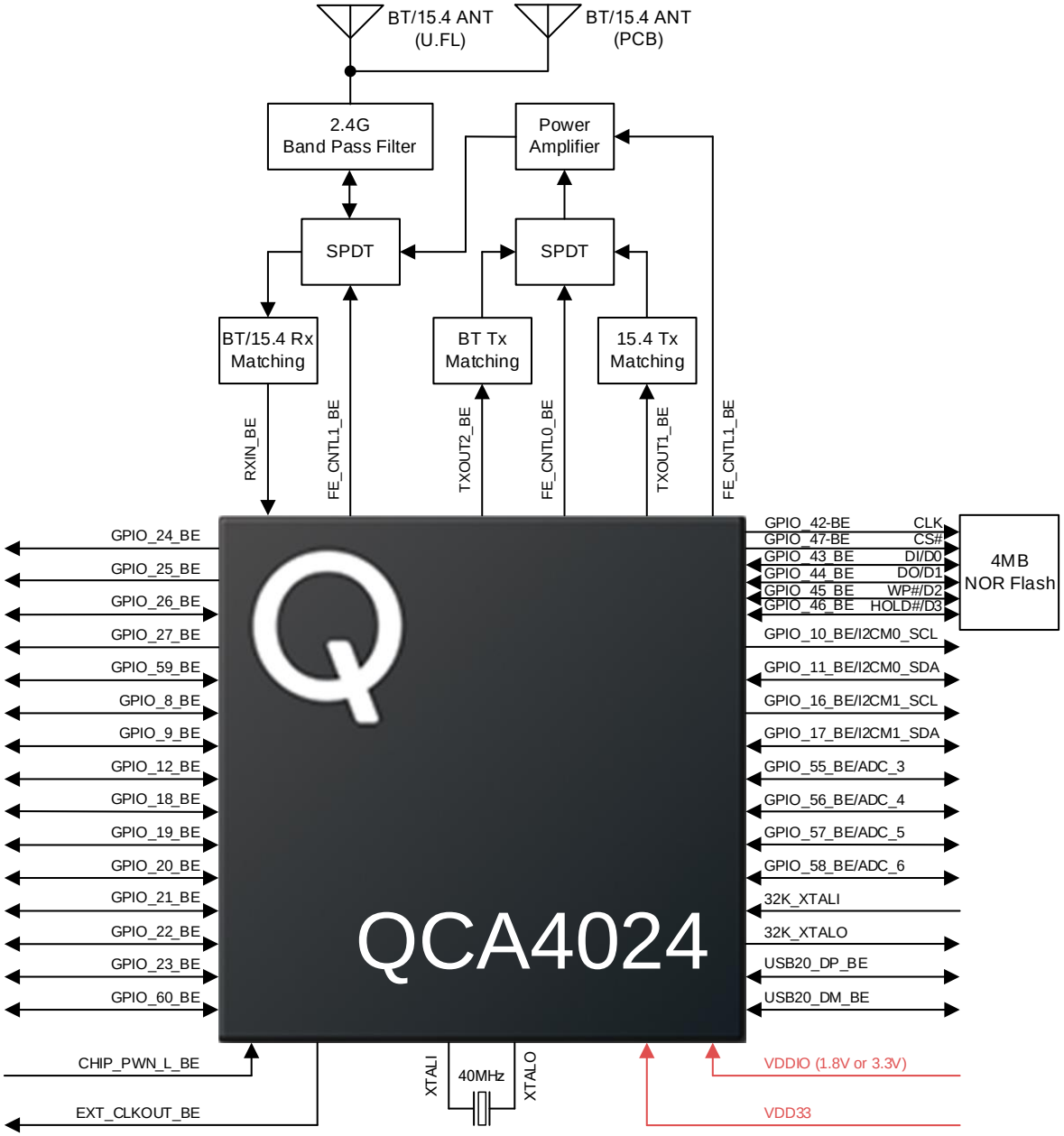

2.2 Pinout Description

2.2.1 Pin Map

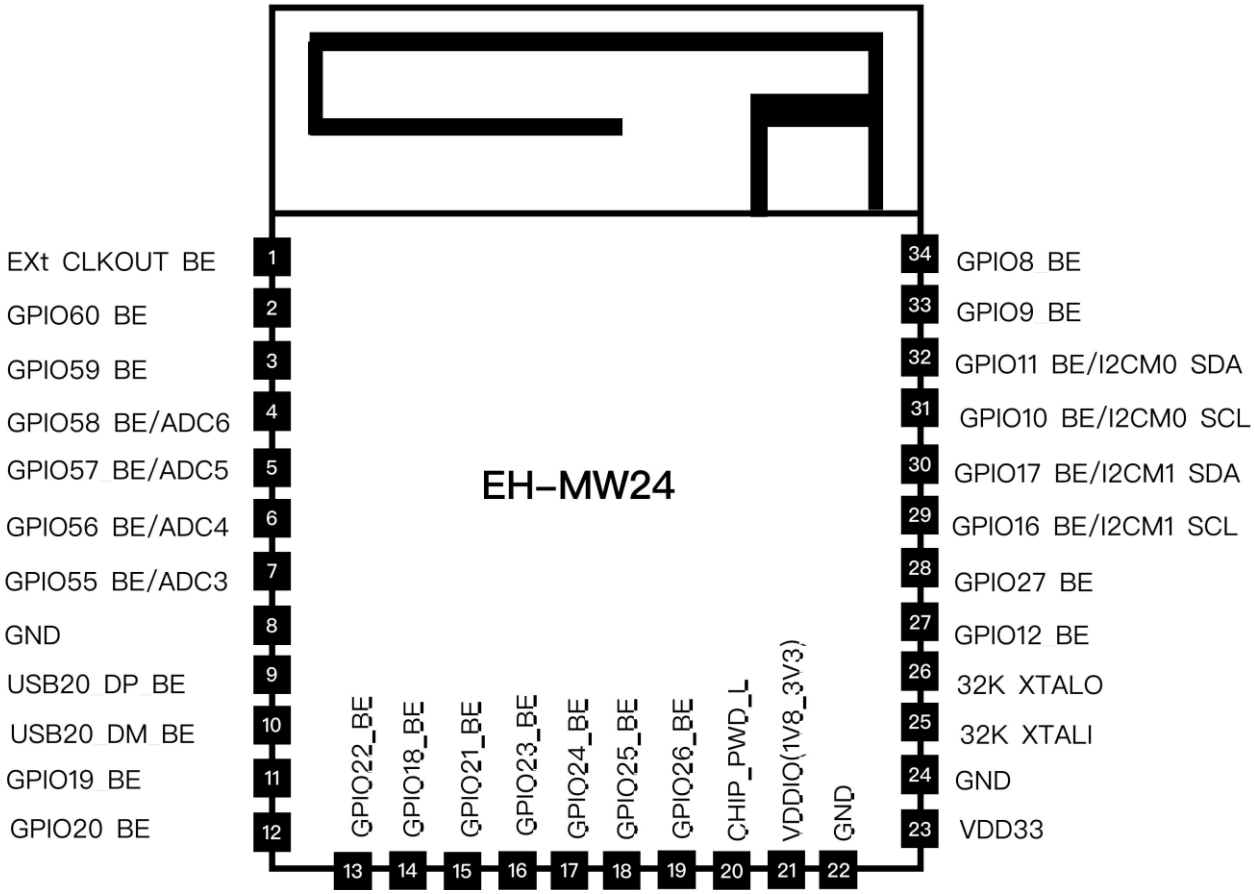

2.2.2 Pin Definition

Pin	Pin Name	Type	Description
23	VDD33	PWR	Power input (2.93～3.63V) connected to 3.3V±10% as default
21	VDDIO	PWR	Host I/O voltage input (1.8V or 3.3V)
8,22,24	GND	GND	Ground
20	CHIP_PWD_L	DI	Reset
1	EXT_CLKOUT	DO	40MHz system clock output
9	USB_DP	AI/AO	USB differential data+
10	USB_DM	AI/AO	USB differential data-
25	RTC32K_XTALI	AI	Optional 32kHz crystal input. Can be N/C (or floating)
26	RTC32K_XTALO	AO	Optional 32kHz crystal output. Can be N/C (or floating)
34	GPIO_8	DI/DO	Generic GPIO (multiplexed). See GPIO Pin Mux Table.
33	GPIO_9	DI/DO	
31	GPIO_10	DI/DO	

32	GPIO_11	DI/DO	
27	GPIO_12	DI/DO	
29	GPIO_16	DI/DO	
20	GPIO_17	DI/DO	
14	GPIO_18	DI/DO	
11	GPIO_19	DI/DO	
20	GPIO_20	DI/DO	
15	GPIO_21	DI/DO	
13	GPIO_22	DI/DO	
16	GPIO_23	DI/DO	
17	GPIO_24	DI/DO	
18	GPIO_25	DI/DO	
19	GPIO_26	DI/DO	
28	GPIO_27	DI/DO	
7	GPIO_55	DI/DO	
6	GPIO_56	DI/DO	
5	GPIO_57	DI/DO	
4	GPIO_58	DI/DO	
3	GPIO_59	DI/DO	
2	GPIO_60	DI/DO	

2.2.3 IO Pin Mux Table

GPIO	ADC	PWM	SDIO	SPI	UART	I2C	I2S	KyPad1	KyPad2	JTAG	PTA
8					UART_RXD			COL_4	COL_3	JTAG1_TCK	
9					UART_TXD			ROW_4	ROW_0	JTAG1_TDO	
10						I2CM0_SCL		COL_5	ROW_1	JTAG1_TMS	
11						I2CM0_SDA		ROW_5	ROW_2	JTAG1_TDI	
12		PWM_0	SDIO_CLK					COL_6	ROW_3	JTAG1_TRST	
16			SDIO_CMD	SPIM_CS2	HSUART_RTS	I2CM1_SCL		ROW_0	COL_7		BT_ACTIVE
17			SDIO_D0	SPIM_CS1	HSUART_RXD	I2CM1_SDA		ROW_1	ROW_4		WLAN_ACTIVE
18		PWM_6	SDIO_D1	SPI_CLK	HSUART_CTS			COL_2	ROW_5		
19		PWM_1	SDIO_D2	SPI_CS	HSUART_TXD			COL_3	ROW_6		
20		PWM_2	SDIO_D3	SPI_MISO	HSUART_RXD			ROW_2	ROW_7		
21		PWM_4						ROW_3			
22		PWM_3									
23		PWM_5		SPI_MOSI	HSUART_RTS						
24				SPIM_CS0	UART_RXD			COL_7		JTAG2_TCK	
25				SPIM_CLK	UART_TXD			ROW_7		JTAG2_TDO	
26				CPIM_MOSI						JTAG2_TMS	
27				SPIM_MISO						JTAG2_TDI	
55	ADC_3						I2S_BCLK				
56	ADC_4						I2S_SDI				
57	ADC_5						I2S_SDO				
58	ADC_6						I2S_WS				
59	ADC_7				HSUART_CTS						
60					HSUART_TXD		I2S_MCLK				BT_PRIORITY

2.3 Peripheral Interfaces

EH-MW24 supports the following peripheral interfaces through 24x multiplexed GPIO:

- 1x SDIO slave
- 1x SPI master or slave
- 1x High-Speed UART (3Mbps)
- 1x UART (115.2kbps)
- 2x I2C master
- 1x I2S master or slave
- 5x 12-bit ADC
- 7x PWM
- 1x JTAG
- 1x USB 2.0 (for manufacturing testing)

2.4 Bootstrap Signals

2.4.1 Bootstrap Mode

GPIO_9	GPIO_22	Description
0	0	Force M4 to load image from flash memory (Default)
0	1	Force M4 to boot in EDL (Emergency Download Mode) Allows user to burn image into flash memory

2.4.2 JTAG Mode

GPIO_9	GPIO_18	GPIO_25	Description
0	0	0	No JTAG enabled
0	1	0	Not Allowed
0	0	1	JTAG Pins on GPIO [11:8]
0	1	1	JTAG Pins on GPIO [27:24]
1	X	X	Not Allowed

2.4.3 XTAL Mode

GPIO_23	Description
0	40MHz XTAL
1	Not Allowed

2.4.4 32.768KHz Sleep Clock Mode

GPIO_20	GPIO_21	Description
0	0	Chip Internal LPO
1	0	External Crystal 32.768KHz
0	1	External 32.768KHz TCXO Clock connected to GPIO_48
1	1	Not Allowed

3 Electrical Characteristics

3.1 Absolute Maximum Ratings

The absolute maximum ratings provided in this section reflect the stress levels that, if exceeded, may cause permanent damage to the device. No functionality is guaranteed outside the operating specifications. Functionality and reliability are only guaranteed within the operating conditions described in Section 4.2.

Symbol	Parameter	Min	Max	Unit
VDD33	Power input voltage	-0.3	4.0	V
VDDIO	I/O input voltage	-0.3	4.0	V

3.2 Recommended Operating Conditions

Symbol	Parameter	Min	Typ	Max	Unit
VDD33	Power input voltage	2.97	3.3	3.63	V
VDDIO	I/O input voltage	2.97	3.3	3.63	V

3.3 DC Electrical Characteristics

These conditions apply to all DC characteristics unless otherwise specified: T_{amb} = 25 °C, VDD33 = 3.3V.

Symbol	Parameter	Conditions	Min	Typ	Max	Unit
V_{IH}	High Level Input Voltage	-	2.97	-	3.63	V
V_{IL}	Low Level Input Voltage	-	-0.3	-	0.3	V
V_{OH}	High Level Output Voltage	-	3.0	-	3.3	V
V_{OL}	Low Level Output Voltage	-	-0.3	-	0.4	V

4 Radio Performance

4.1 BLE Radio Characteristics

Parameter	Description	Typical	Unit
Tx Power	BLE Data Rate 1Mbps	+7	dBm
	BLE Data Rate 2Mbps	+7	dBm
Rx Sensitivity	BLE Data Rate 1Mbps	-88	dBm
	BLE Data Rate 2Mbps	-88	dBm

4.2 802.15.4 Radio Characteristics

Parameter	Description	Typical	Unit
Tx Power	802.15.4 Data Rate 250kbps (O-QPSK DSSS)	+17	dBm
Rx Sensitivity	802.15.4 Data Rate 250kbps (O-QPSK DSSS)	-98	dBm

5 Mechanical Specification

5.1 Dimensional View

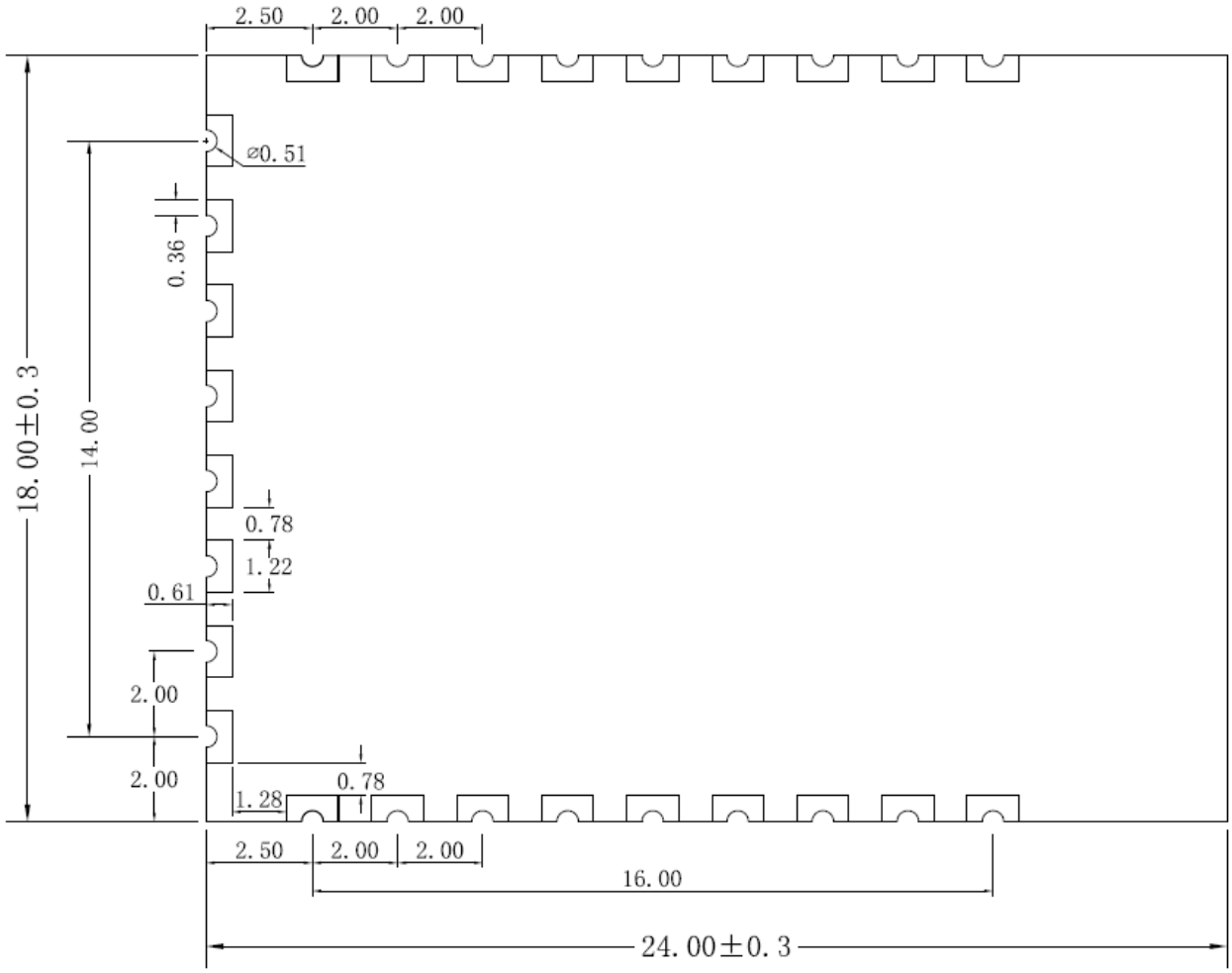

5.2 Pad Dimension

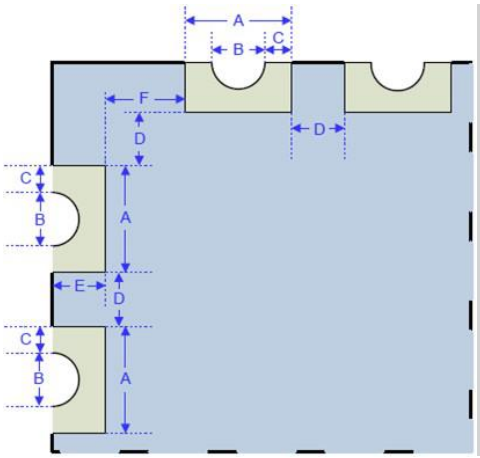

Parameter	Description	Value
A	Pin Exterior	
B	Pin Interior Diameter	
C	Pin Interior Offset	
D	Pin Spacing	
E	Pin Exterior	
F	Pin Comer Spacing	

6 Development Kit

6.1 Overview

Two kinds of development kits are created to allow EH-MW24 operate in either hostless mode or hosted modes. The hosted mode can further be broken down to either Network Co-Processor (NCP) mode or Radio Co-Processor (RCP) to allow flexibility to adapt to an external host.

6.1.1 Hostless Mode

In hostless mode, EH-MW24 performs both applications and communications without an external host required to maximize cost saving and minimize size. The following diagram shows a typical deployment scenario and software architecture.

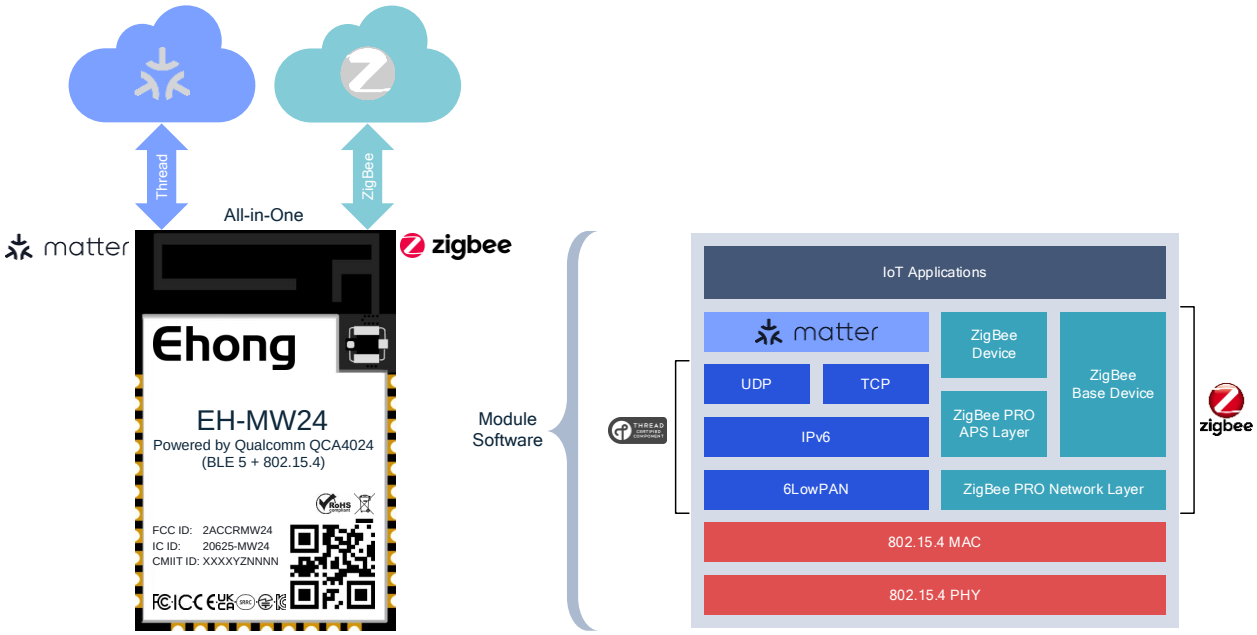

6.1.2 Hosted Mode

In hosted mode, an external host is required to carry out applications while EH-MW24 is functioning as either Network Communication Processor (NCP) or Radio Communication Processor (RCP).

In Network Communication Processor (NCP) mode, all protocol stack will be offloading to EH-NW24 while an external host is focusing on IoT applications. This will take advantage of full computing resources on EH-MW24 to take care of all communication related tasks and minimize software changes required on an external host. The following diagram shows the NCP deployment scenario and software architecture.

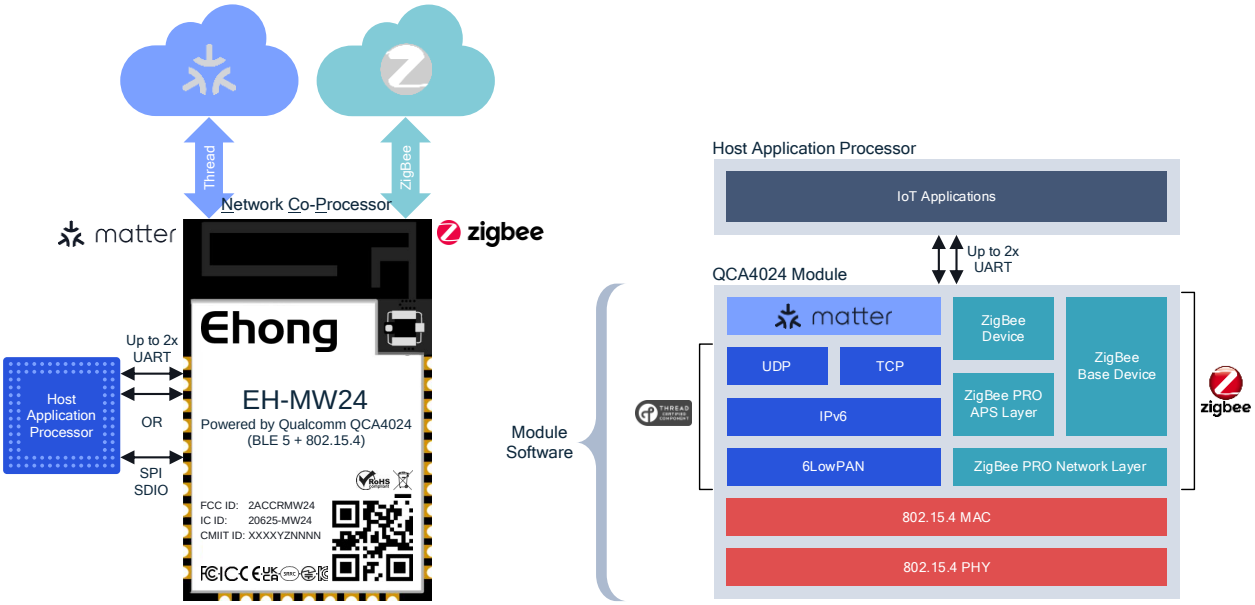

In Radio Communication Processor (RCP) mode, EH-NW24 is simply performing 802.15.4 MAC functions while an external host will take care of all upper level protocol stacks as well as on IoT applications. This will take advantage of full computing resources on the host and simplifies software structure on EH-MW24. The following diagram shows the RCP deployment scenario and software architecture.

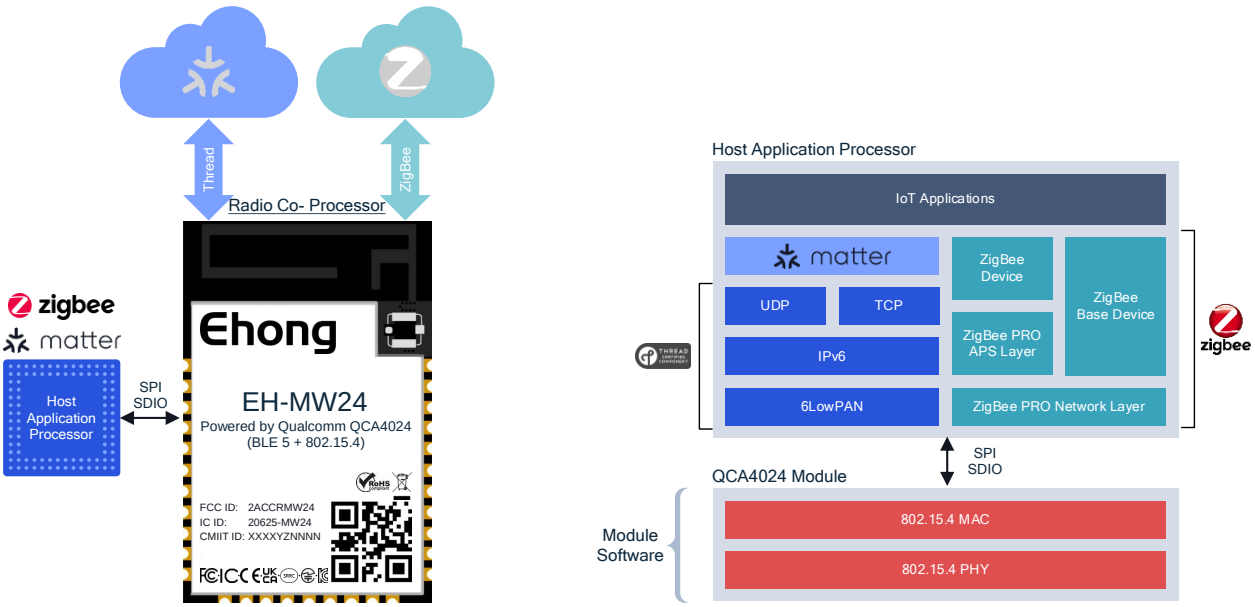

6.2 Hostless Development Kit

6.2.1 Hardware Configuration

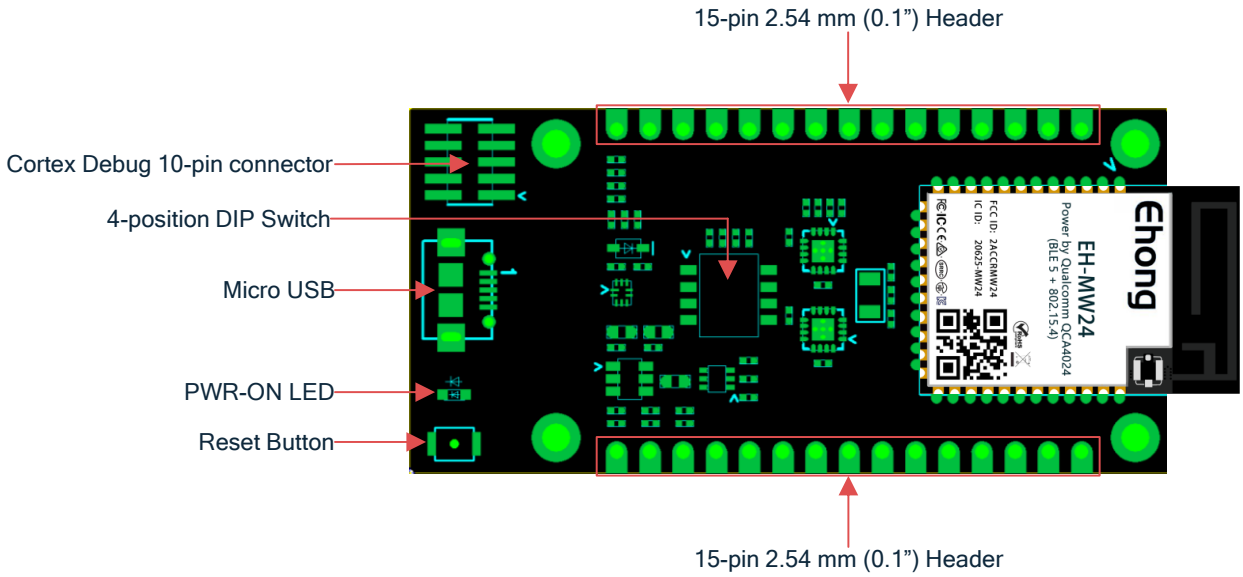

It has the following headers, connectors, DIP switch and LED:

1. 2x 15-pin 2.54mm (0.1”) header – All GPIO and control pins are exposed to these two headers as shown below:

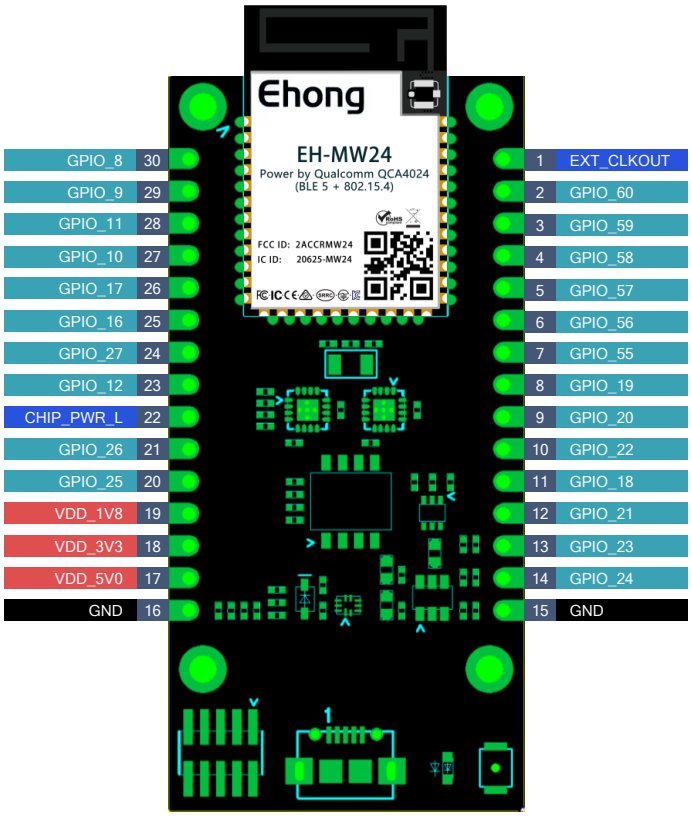

2. Micro-USB connector – This USB port is used to power the development kit as well as to provide UART interface to EH-MW24 via USB to UART bridge. It can be also used to re-flash image and perform manufacturing test.
3. Cortex Debug 10-pin connector – This standard connector is used for JTAG function supported by QCA4024. It can be connected to an external debugger such as SEGGER j-Link to offer ITM and DWT trace information.

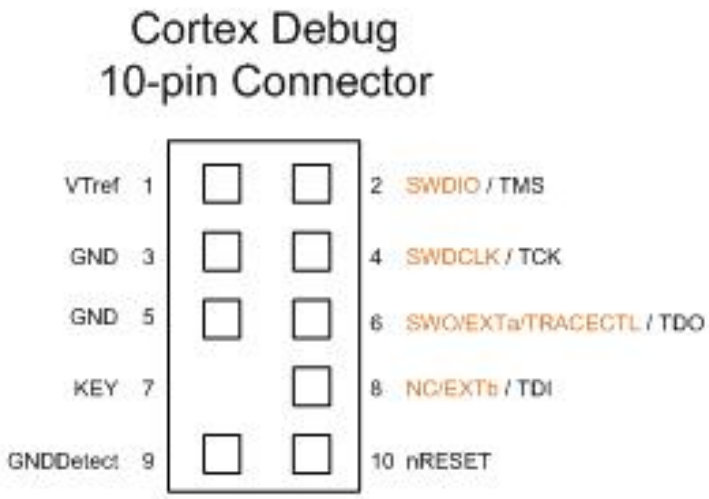

4. Reset Button – This button can be used to reset EH-MW24.
5. PWR-ON LED – It is used to indicate power on state when on.
6. 10-position DIP switch – This is used to configure operation as defined below:

Switch	Position	Value
SW1	ON	USB for manufacturing test
	OFF	USB for UART
SW2	ON	JTAG Enabled
	OFF	JTAG Disabled
SW3	ON	I/O voltage 3.3V
	OFF	I/O voltage 1.8V
SW4	ON	RTC 32kHz XTAL enabled
	OFF	RTC 32kHz XTAL disabled

6.2.2 Block Diagram

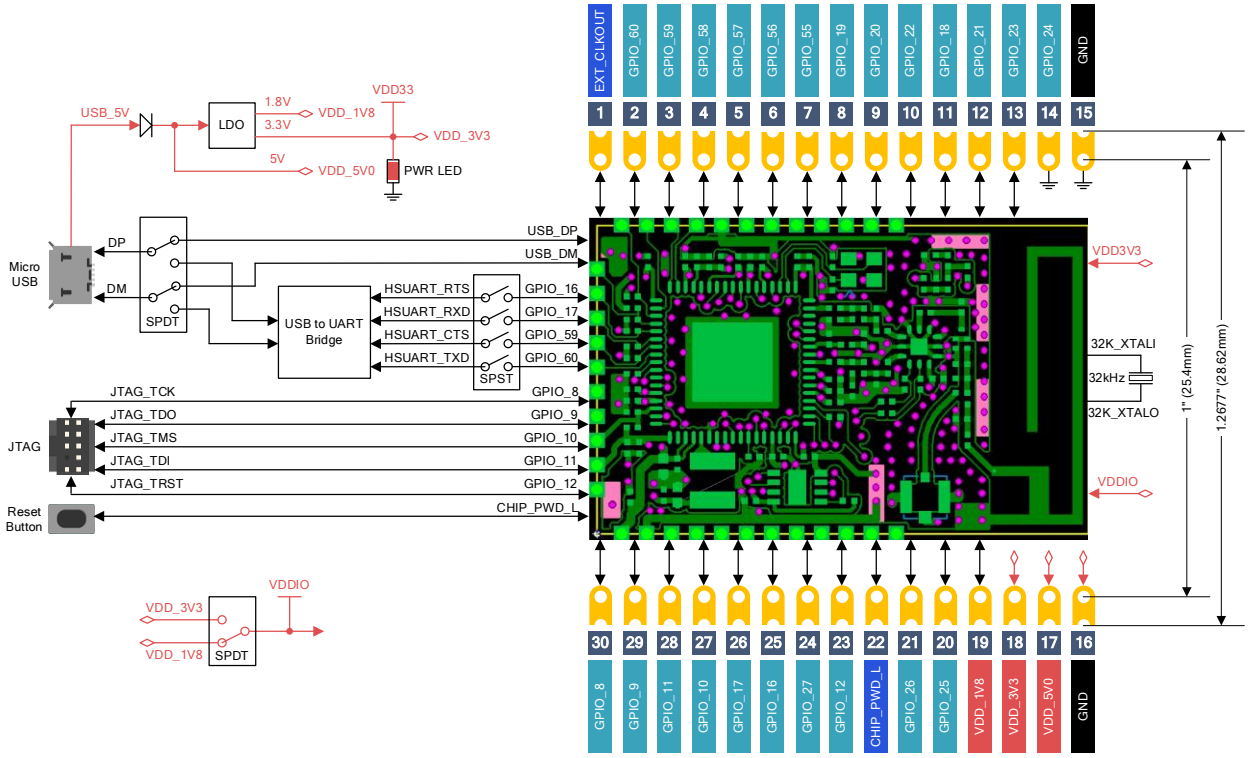

6.2.3 Dimension

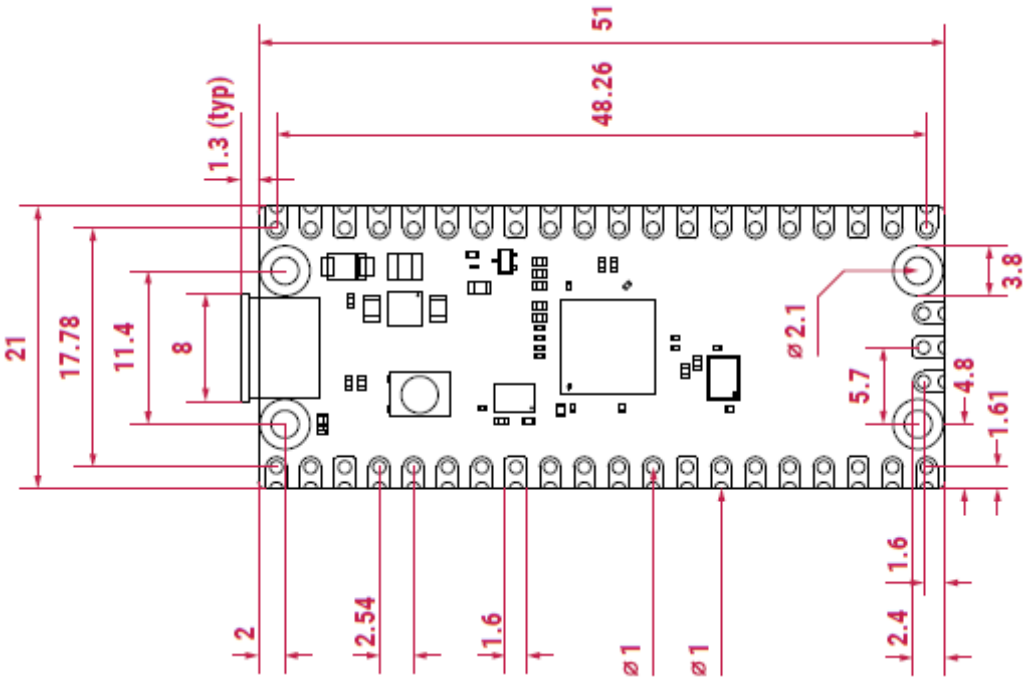

6.3 Hosted Development Kit (Pmod Adapter)

Hosted development kit is created per various industry standards. One of those standards being used is Digilent Pmod™ Interface Specification (*https://digilent.com/reference/pmod/start*).

6.3.1 Hardware Configuration

Hosted development kit (Pmod Adapter) is shown below:

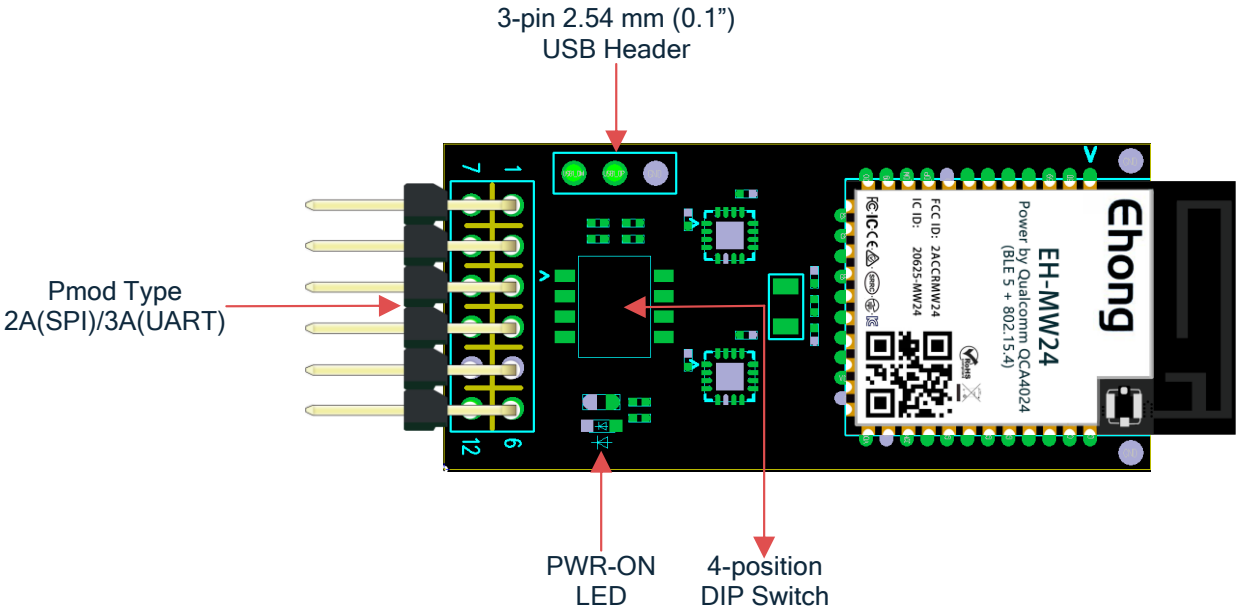

It has the following headers, connectors, DIP switch and LED:

1. 2x6 2.54mm (0.1”) Header Pmod Type 2A (SPI)/3A (UART) – Interface type can be configured by DIP switch SW2. In case of UART, male and female can be configured DIP switch SW3.

Pmod Type 2A

SPI Slave

Pmod Type 3A

UART Male

Pmod Type 3A

UART Female

2. 3-pin 2,54 mm (0.1”) USB header – It is offered as an option in case the user wants to re-flash image via USB interface.
3. PWR-ON LED – It is used to indicate power on state when on
4. 4-position DIP Switch – This is used to configure operation as defined below:

Switch	Position	Value
SW1	ON	Boot from USB
	OFF	Boot from UART
SW2	ON	Pmod Type 2A (SPI)

	OFF	Pmod Type 3A (UART)
SW3	ON	Pmod Type 3A (UART) Male
	OFF	Pmod Type 3A (UART) Female
SW4	ON	RTC 32kHz XTAL enabled
	OFF	RTC 32kHz XTAL disabled

6.3.2 Block Diagram

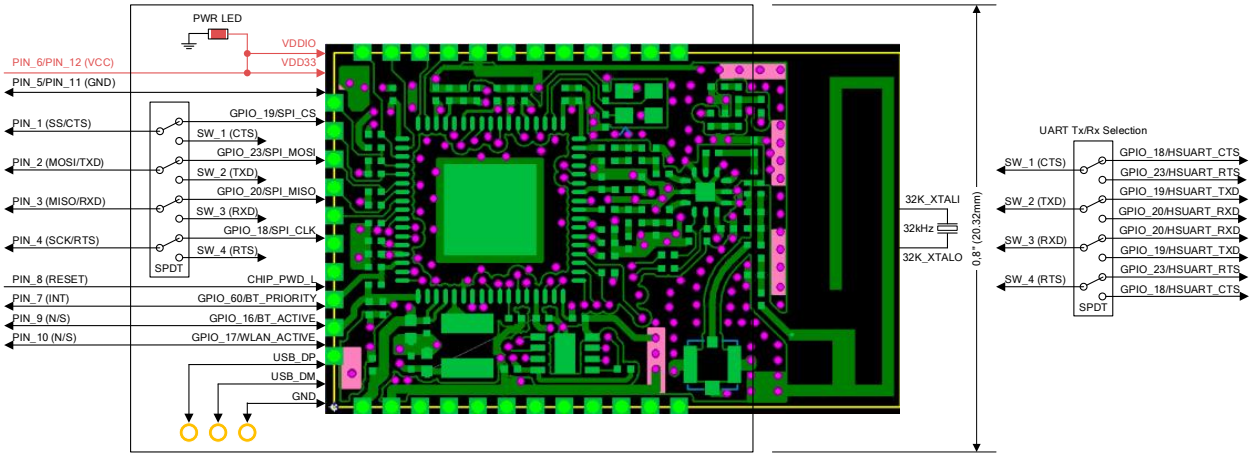

6.3.3 Dimension

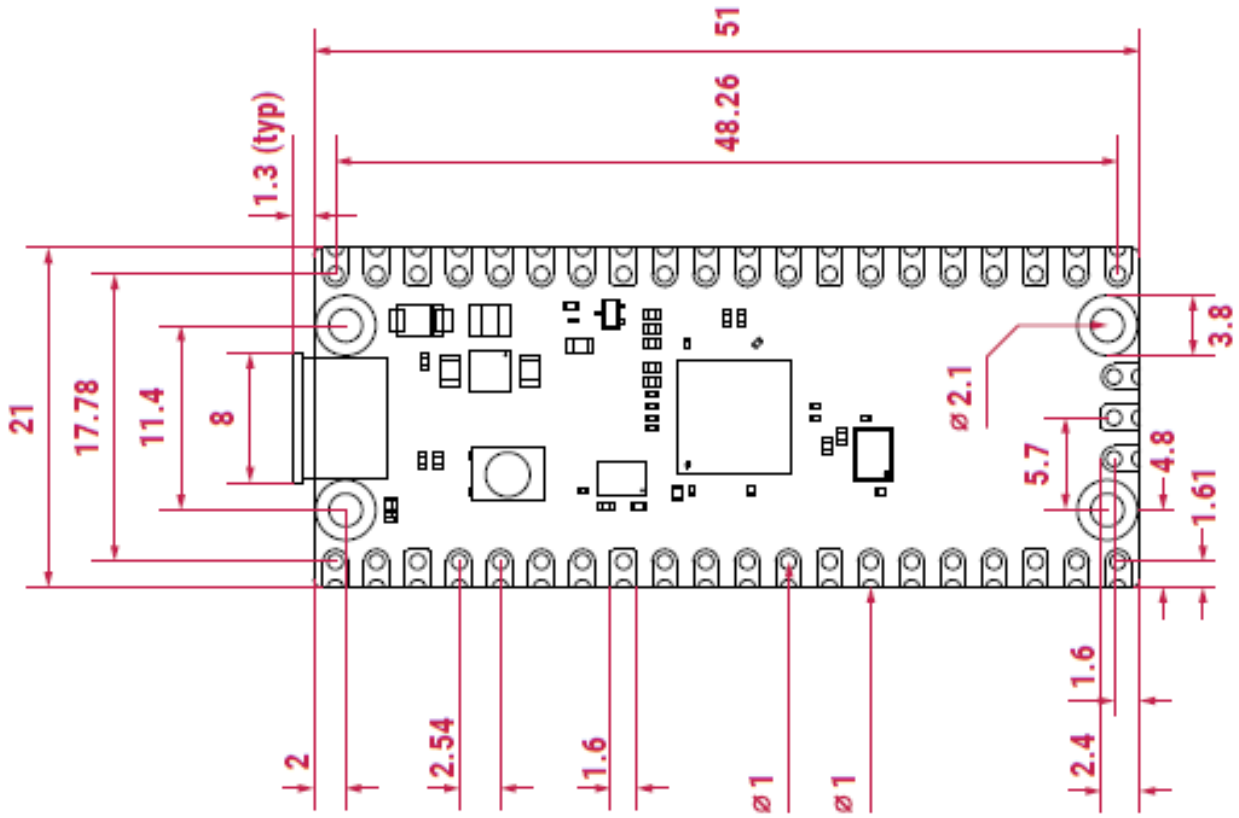

6.4 Hosted Development Kit (Android Shield)

7 Manufacturing Recommendation

7.1 Power Layout Guideline

The module is powered by either 3V battery or DC 3.3V. Power pin connection capacitor is as close as possible to chip and pin. Decoupling the power supply from the chip using a capacitor. Use capacitors to prevent noise from coupling back to the power plane.

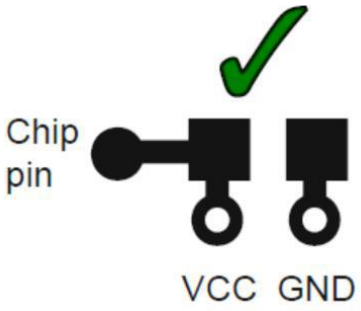

7.2 RF Layout Guideline

To optimize antenna performance, place the module in the corner of the PCB as shown below. Do not cover copper and trace the antenna clearance area. Keep the antenna area as far away as possible from the power supply and metal components. Connect all GND pins directly to a solid GND plane. Place GND vias as close as possible to the GND pin. Use a good layout method to avoid excessive noise coupling with signal lines or supply voltage lines.

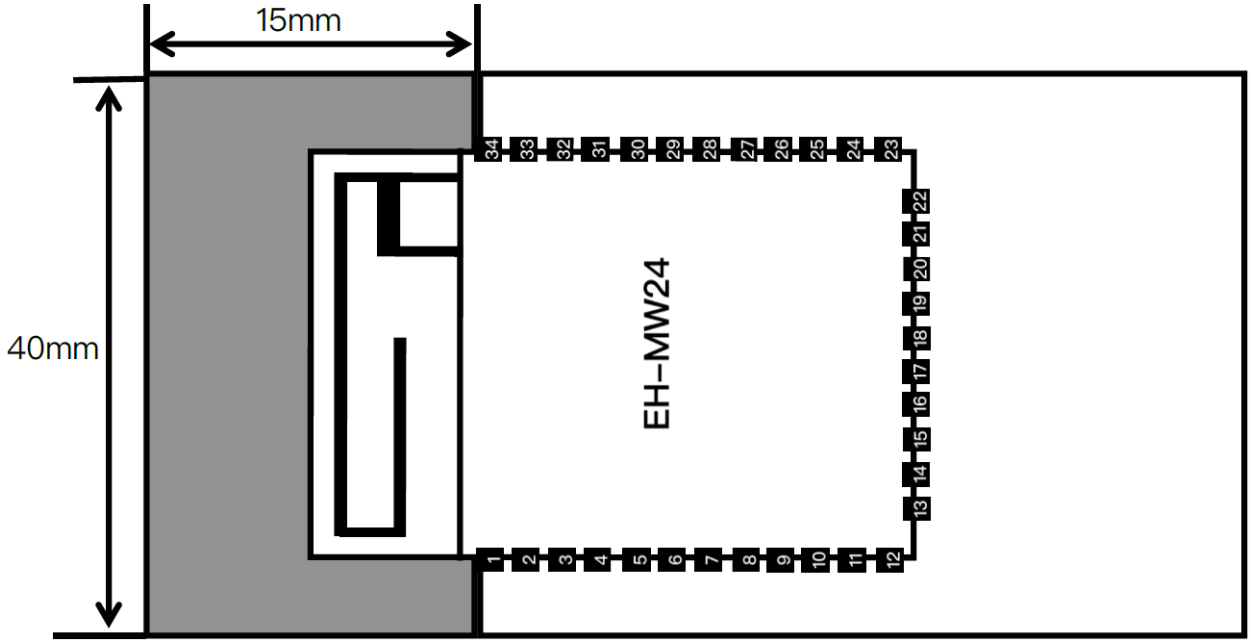

7.3 Soldering Recommendations

The EH-MW24 modules can be SMT on the board following the temperature curve graph:

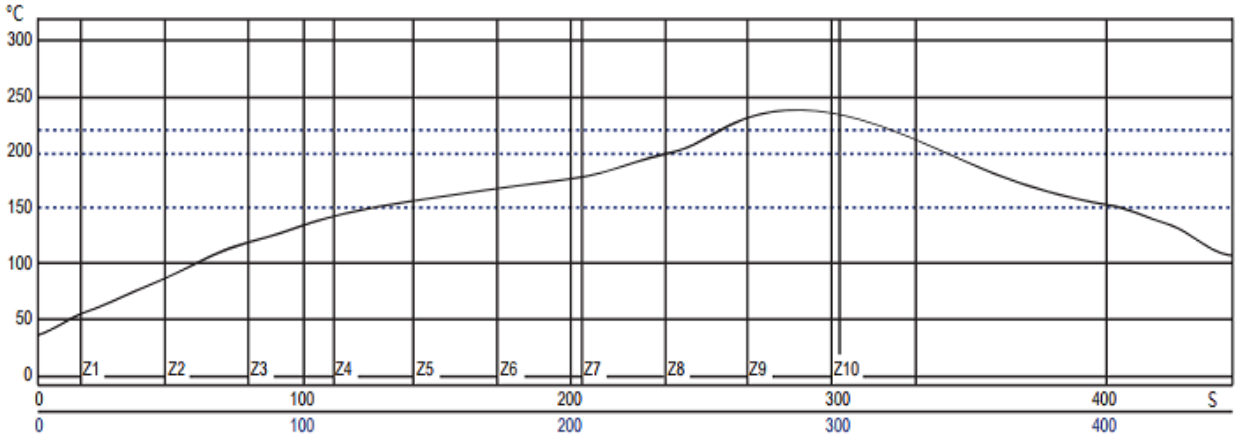
°C
300
250
200
150
100
50
0
Z1
Z2
Z3
Z4
Z5
Z6
Z7
Z8
Z9
Z10
0
100
200
300
400
S
0
100
200
300
400

8 Packaging

Modules are packaged on reels loaded with 1000 modules. Each reel is placed in an antistatic bag with a desiccant pack and a humidity card and placed in an 36x25x12cm box. Anti-static warnings and labels adhere to the outside of the bag.

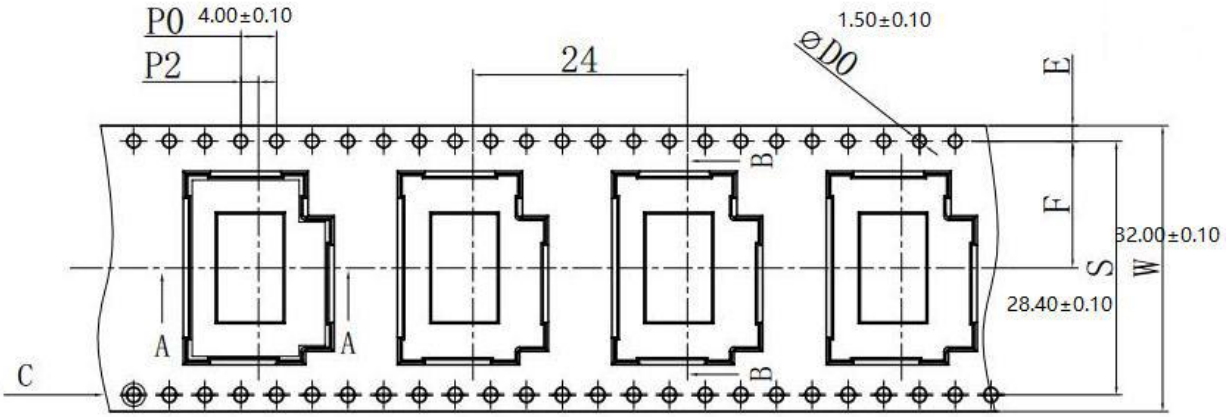

Warning

The MeshConnect Modules contain highly sensitive electronic circuitry. Handling without proper ESD protection may destroy or damage the module permanently.

Warning

The MeshConnect Modules are moisture-sensitive devices. Appropriate handling instructions and precautions are summarized in J-STD-033. Read carefully to prevent permanent damage due to moisture intake.

Moisture Sensitivity Level (MSL)

MSL 3, per J-STD-033

Storage

Storage/shelf life in sealed bags is 12 months at <40°C and <90% relative humidity.12.2 Packing Label

9 Regulatory Compliance

10 Order Information

Part Number	Value
EH-MW24	PCB only antenna
EH-MW24W	PCB or U.FL antenna
EH-MW24E	External PA PCB only antenna
EH-MW24EW	External PA PCB or U.FL antenna

Revision History

Revision	Description	Date
0.1	Initial version	May 31, 2022
1.0		

FCC Statement

This device complies with part 15 of the FCC rules. Operation is subject to the following two cond itions: (1) this device may not cause harmful interference, and (2) this device must accept any int erference received, including interference that may cause undesired operation.

Changes or modifications not expressly approved by the party responsible for compliance could v oid the user's authority to operate the equipment.

NOTE: This equipment has been tested and found to comply with the limits for a Class B digital de vice, pursuant to part 15 of the FCC Rules. These limits are designed to provide reasonable protec tion against harmful interference in a residential installation. This equipment generates uses and can radiate radio frequency energy and, if not installed and used in accordance with the instructi ons, may cause harmful interference to radio communications. However, there is no guarantee th at interference will not occur in a particular installation. If this equipment does cause harmful int erference to radio or television reception, which can be determined by turning the equipment off and on, the user is encouraged to try to correct the interference by one or more of the following measures:

- Reorient or relocate the receiving antenna.
- Increase the separation between the equipment and receiver.
- Connect the equipment into an outlet on a circuit different from that to which the receiver is connected.
- Consult the dealer or an experienced radio/TV technician for help.

Important Note:

Radiation Exposure Statement

This equipment complies with FCC radiation exposure limits set forth for anuncontrolled environment.

This transmitter must not be co-located or operating in conjunction with any other antenna or transmitter.

End Product Labeling

The final end product must be labeled in a visible area with the following" Contains FCC ID: 2ACCRMW24 ".

Manual Information to the End User

The OEM integrator has to be aware not to provide information to the end user regarding how to install or remove this RF module in the user's manual of the end product which integrates this module.

The end user manual shall include all required regulatory information/warning as show in this manual.

Antennas

Antenna Specification are as follows:

Type: PCB Antenna

Gain: 0.54dBi

ISED Statement

- English: This device complies with Industry Canada license-exempt RSS standard(s). Operation is subject to the following two conditions: (1) This device may not cause interference, a nd (2) This device must accept any interference, including interference that may cause undesired operation of the device. The digital apparatus complies with Canadian CAN ICES-3 (B)/NMB-3(B).
- French: Le présentappareilestconforme aux CNR d'Industrie Canada applicables aux appareils radio exempts de licence. L'exploitationestautorisée aux deux conditions suivantes: (1) l'appareil ne doit pas produire de brouillage, et (2) l'utilisateur de l'appareildoit accepter tout brouillageradi oélectriquesubi, mêmesi le brouillageest susceptible d'encompromettre le fonctionnement.

This radio transmitter (ISED certification number: 20625-MW24) has been approved by Industry Canada to operate with the antenna types listed with the maximum permissible gain indicated. Antenna types not included in this list, having a gain greater than the maximum gain indicated for that type, are strictly prohibited for use with this device.

Le présent émetteur radio (ISED certification number: 20625-MW24) a été approuvé par Industrie Canada pour fonctionner avec les types d'antenne énumérés ci-dessous et ayant un gain admissible maximal. Les types d'antenne non inclus dans cette liste, et dont le gain est supérieur au gain maximal indiqué, sont strictement interdits pour l'exploitation de l'émetteur.

Radiation Exposure Statement

This equipment complies with Canada radiation exposure limits set forth for an uncontrolled environment.

Déclaration d'exposition aux radiations

Cet équipement est conforme Canada limites d'exposition aux radiations dans un environnement non contrôlé.

This device is intended only for OEM integrators under the following condition:
The transmitter module may not be co-located with any other transmitter or antenna.
As long as the condition above is met, further transmitter test will not be required. However, the OEM integrator is still responsible for testing their end-product for any additional compliance requirements required with this module installed.

Cet appareil est conçu uniquement pour les intégrateurs OEM dans les conditions suivantes:
Le module émetteur peut ne pas être coïmplanté avec un autre émetteur ou antenne.
Tant que les 1 condition ci-dessus sont remplies, des essais supplémentaires sur l'émetteur ne seront pas nécessaires. Toutefois, l'intégrateur OEM est toujours responsable des essais sur son produit final pour toutes exigences de conformité supplémentaires requis pour ce module installé.

Important Note:

In the event that these conditions cannot be met (for example certain laptop configurations or co-location with another transmitter), then the Canada authorization is no longer considered valid and the IC cannot be used on the final product. In these circumstances, the OEM integrator will be responsible for re-evaluating the end product (including the transmitter) and obtaining a separate Canada authorization.

Note Importante:

Dans le cas où ces conditions ne peuvent être satisfaites (par exemple pour certaines configurations d'ordinateur portable ou de certaines co-localisation avec un autre émetteur), l'autorisation du Canada n'est plus considéré comme valide et l' IC ne peut pas être utilisé sur le produit final. Dans ces circonstances, l'intégrateur OEM sera chargé de réévaluer le produit final (y compris l'émetteur) et l'obtention d'une autorisation distincte au Canada.

End Product Labeling

The final end product must be labeled in a visible area with the following: Contains

IC: 20625-MW24

Plaque signalétique du produit final

Le produit final doit être étiqueté dans un endroit visible avec l'inscription suivante: Contient des

IC: 20625-MW24

Manual Information to the End User

The OEM integrator has to be aware not to provide information to the end user regarding how to install or remove this RF module in the user's manual of the end product which integrates this module.

The end user manual shall include all required regulatory information/warning as show in this manual.

Manuel d'information à l'utilisateur final

L'intégrateur OEM doit être conscient de ne pas fournir des informations à l'utilisateur final quant à la façon d'installer ou de supprimer ce module RF dans le manuel de l'utilisateur du produit final qui intègre ce module.

Le manuel de l'utilisateur final doit inclure toutes les informations réglementaires requises et avertissements comme indiqué dans ce manuel.

Ehong

Disclaimer and Copyright Notice

Information in this document, including URL references, is subject to change without notice. Please visit *www.ehonglink.com/* for the latest information.

THIS CODUMENT IS PROVIDED AS IS WITH NO WARRANTIES WHATSOEVER, INCLUDING ANY WARRANTY OF MERCHANTABILITY, NON-INFRINGEMENT, FITNESS FOR ANY PARTICULAR PURPOSE, OR ANY WARRANTY OTHERWISE ARISING OUT OF ANY PROPOSAL, SPECIFICATION OR SAMPLE.

All liability, including liability for infringement of any proprietary rights, relating to the use of information in this document, is disclaimed. No licenses express or implied, by estoppel or otherwise, to any intellectual property rights are granted herein.

The Wi-Fi Alliance Member logo is a trademark of the Wi-Fi Alliance. The Bluetooth logo is a registered trademark of Bluetooth SIG. All trade names, trademarks and registered trademarks mentioned in this document are property of their respective owners and are hereby acknowledged.

Copyright©2022 Ehong InformationTechnology Co. Ltd. All rights reserved.