4. The ROM and RAM are automatically checked. If NG (No Good) appears to the right of ROM or RAM indication, contact your dealer for advice.
5. To check the keyboard, press any key except the omnipad, ACQ and power keys. Its corresponding location on the display lights in black if the key is operating properly.
6. To escape from the test. Press the [**MENU**] key.

5.5 Life Expectancy of Magnetron

The following table shows the life expectancy of the magnetron.

Model	Type	Code no.	Life expectancy
KR-1238/1538	MSF1421B	V801	2，000 - 3,000 hours (Including stand-by)
	MAF1421B		
KR-1268/1568	MAF1422B		
	MSF1422		

Table 5-2 Life expectancy of magnetron

6. INSTALLATION

This chapter provides the procedures necessary for installation.
Installation mainly consists of the following:

- sitting and mounting the display unit and antenna unit
- connection of the signal cable and the power cable
- establishing the ground
- checking the installation, and
- adjustments.

6.1 Antenna Unit Installation Sitting, handling considerations

- The antenna unit is generally installed either on top of the wheelhouse or on the radar mast on a suitable platform. Locate the antenna unit where there is a good all-round view rigging intercepting the scanning beam. Any obstruction will cause shadow and blind sectors. A mast for instance, with a diameter considerably less than the width of the radiator, will cause only a small blind sector, but a horizontal spreader or crosstrees in the same horizontal plane as the antenna unit would be a much more serious obstruction; you would need to place the antenna unit well above or below it.
- It is rarely possible to place the antenna unit where a completely clear view in all direction is available. Thus, you should determine the angular width and relative bearing of any shadow sectors for their influence on the radar at the first opportunity after fitting. (The method of determining blind and shadow sectors appears later in this chapter.)
- If you have a radio direction finder on your boat, local its antenna clear of the antenna unit, to prevent interference to the direction finder. A separation of more than two meters is recommended.
- To lessen the chance of picking up electrical interference, avoid where possible routing the signal cable near other onboard electrical equipment Also avoid running the cable in parallel with power cables.
- The compass safe distance should be observed to prevent deviation of the magnetic compass.

Model	Standard compass	Steering compass
KR-1238/1538	1.3m	0.7m

- Do not paint the radome (Model KR-1238/1538) or to ensure proper emission of the radar waves.
- When this radar is to be installed on larger vessels, consider the following points:

(1) The signal cable run between the antenna and the display comes in lengths of 10 m, 15 m, 20 m and 30 m. Whatever length is used it must be unbroken; namely, no splicing allowed.

(2) Deposits and fumes from a funnel or other exhaust vent can adversely affect the aerial performance and hot gases may distort the radiator portion. The antenna unit must not be mounted where the temperature is more than 70℃.

Mounting (KR-1238/1538)

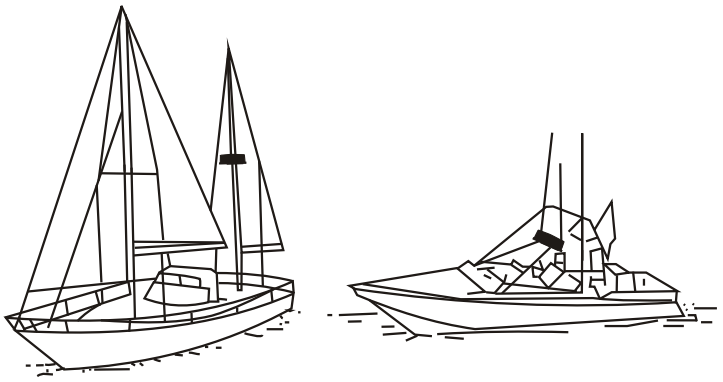

Figure 6-1 Typical antenna unit location

Unpacking the antenna unit

1. Open the antenna unit packing box carefully.
2. Unbolt the four bolts at the base of the radome to remove the radome cover.

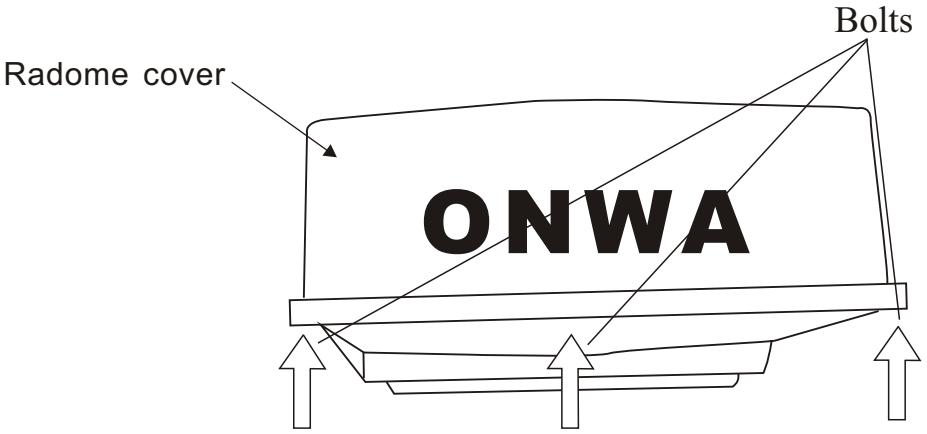

Figure 6-2 Antenna unit

Mounting platform

Holes for antenna unit:

The mounting surface must be parallel with the waterline and provided with four holes whose dimensions are shown in the outline drawing attached at the end of this manual. The unit is adjusted so a target echo returned from the bow direction will be shown on the zero degree (heading line) position on the screen. When drilling holes, be sure they are parallel with the fore and aft line.

3. Prepare a platform of 5 to 10 millimeters in thickness for the antenna unit. Find the cable entry on the radome base. Next, position the radome base so the cable entry faces the stern direction. This alignment must be as accurate as possible. Fasten the radome base to the mounting platform with four each of M10 x 30 hex bolts, flat washers and spring washers.

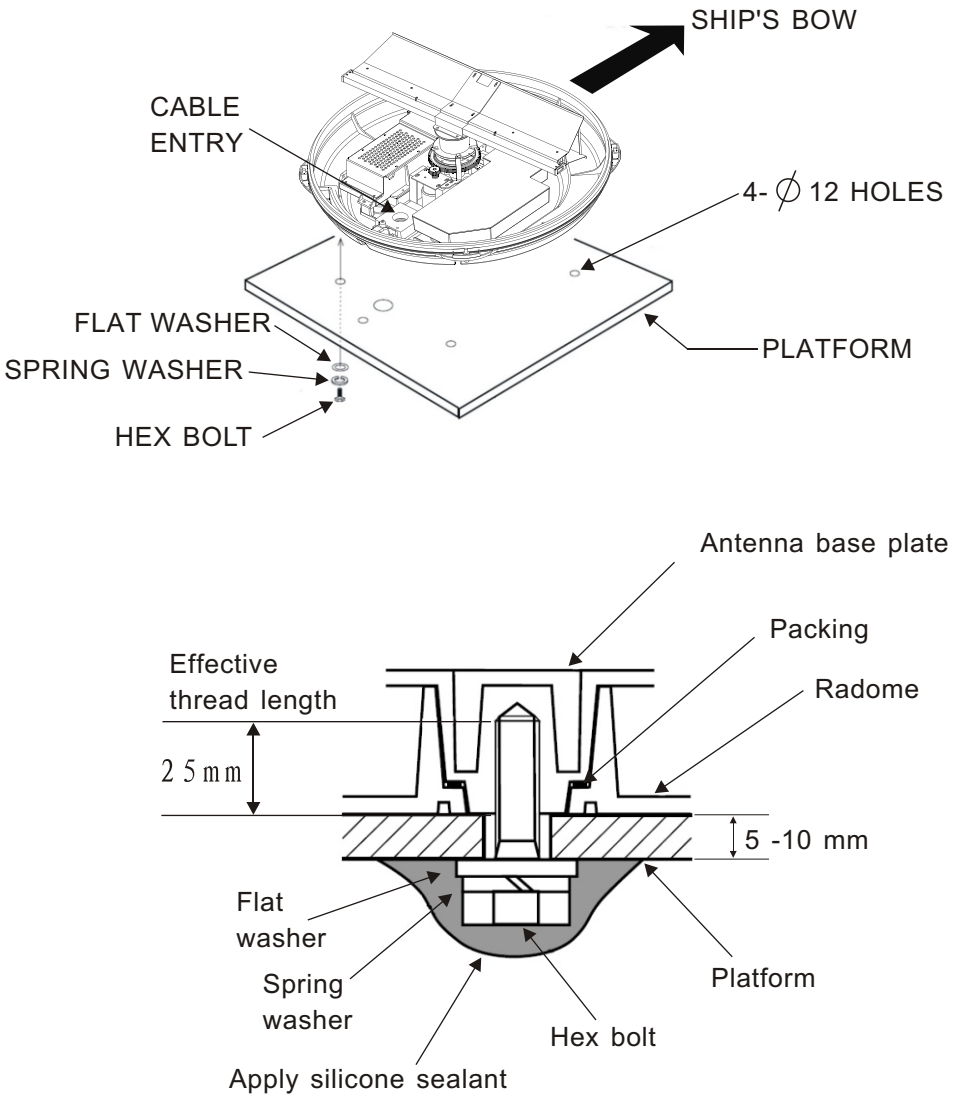

Figure 6-3 How to fasten the radome base to the mounting platform

Wiring and final preparation

4. Drill a hole of at least 20 millimeters diameter through the deck or bulkhead to run the signal cable between the antenna unit and display unit. (To prevent electrical interference avoid running the signal cable near other electrical equipment and in parallel with power cables.) Pass the cable through the hole. Then, seal the hole with sealing compound for waterproofing
5. Remove the shield cover in the radome.
6. Remove the cable clamping plate by unfastening four screws and removing a gasket.
7. Pass the cable through the hole at the bottom of the radome base.
8. Secure the cable with the cable clamping plate and gasket. Ground the shield and vinyl wire by one of the screws of the cable clamping plate.

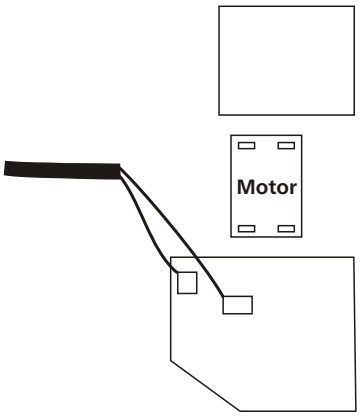

9. Connect the wire to the Video Processing unit.
   (1) 3-pin connector to P18
   (2) 8-pin connector to P12

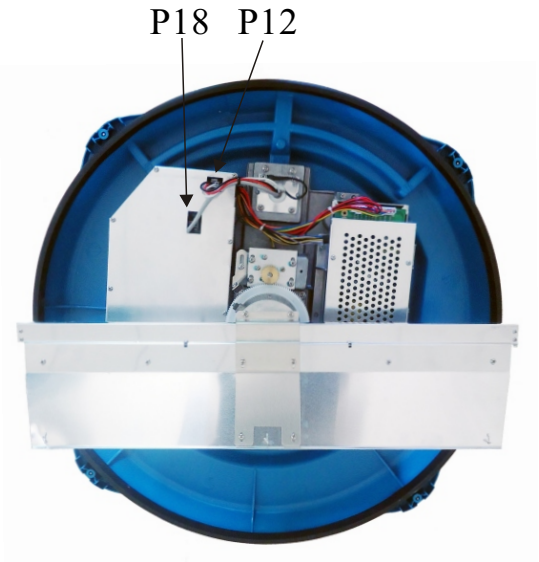

Figure 6-4 Location of P18/P12

11. Fix the shield cover. Do not pinch the cable.
12. Loosely fasten the radome fixing bolts. You will tighten them after confirming the unit is working normally.

Mounting (KR-1568)

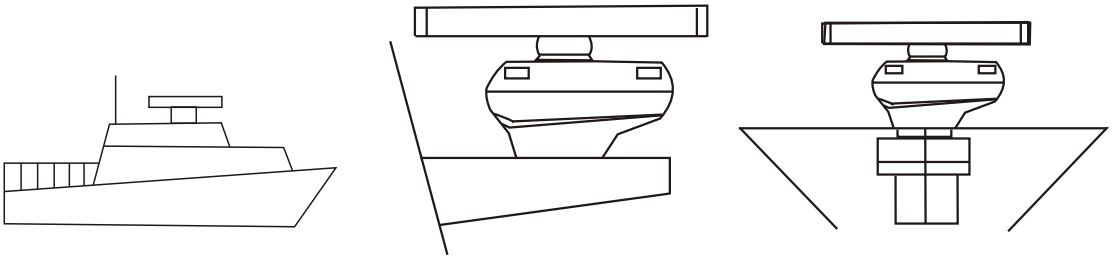

Figure 6-5 Typical antenna unit mounting locations

1. Drill four fixing bolt holes (13 millimeters dia.), One cable entry hole (approx. 50 millimeters dia.) In the mounting platform. See the outline drawing.

2. Detach the antenna housing cover from the antenna housing by loosening four fixing blots. The antenna housing cover fitted with the transceiver module can be stored in a convenient place until the wiring to the antenna unit is done.

3. Place the antenna bousing on the mounting platform and orient it as shown in Figure 6-6.

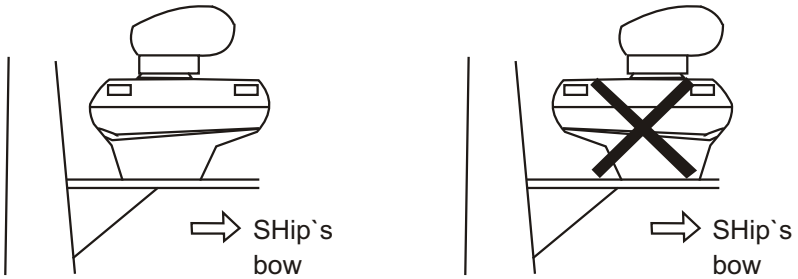

Figure 6-6 How to orient the antenna unit

4. Insert four M12 × 60 hex head bolts with the seal washers from inside the antenna housing, to prevent the bolts from contacting the transceiver module. Install the seal washer with the larger diameter next to the head of the bolt. Coat flat and spring washers and nuts and then use them to fasten the antenna housing to the mounting platform. Finally, coat exposed parts of nuts, bolts and Flat and spring washers as shown in Figure 6-7.

Note: Tighten the bolts by their nuts to prevent damage to the seal washer.
Do not turn the bolts to secure the antenna housing.

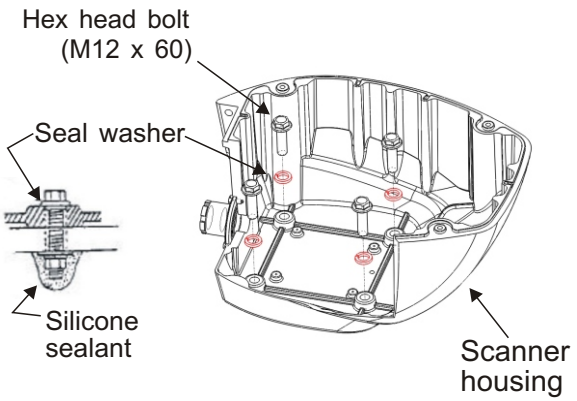

Figure 6-7 How to mount the antenna housing

Connections

Only the signal cable runs from the display unit to the antenna unit. Make the hole for passing the cable through the bulkhead or deck at least 20 millimeters diameter. In order to minimize the chance of picking up electrical interference, avoid where possible routing the signal cable near other onboard electrical equipment. Also, avoid running the cable in parallel with power cables. Pass the cable through the hole and apply sealing compound around the hole for waterproofing.
The procedure for connecting the signal cable to the antenna unit is as following.

1. Through a pipe or waterproof cable grand fitted on the wheelhouse top or bulkhead.
2. Unfasten Fastening bolts at rear of the scanner tail to remove the cable gland assembly.
3. Pass the signal cable sequentially through the fastening bolt , the washer , waterproof apron, under the washer ,and then through the mounting hole into the base of the antenna inside (removed in step 2.)

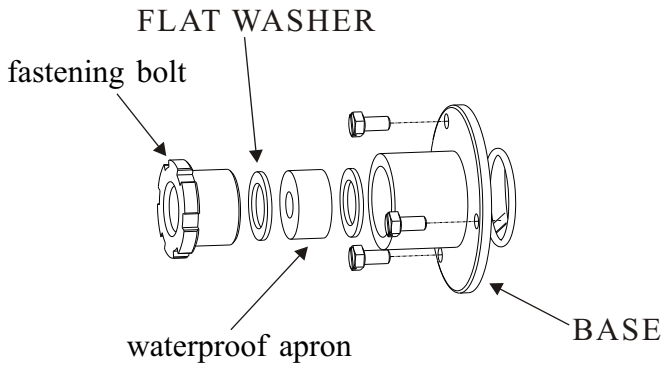

Figure 6-8 Passing the signal cable through the antenna housing

4. Fasten the cable fastening bolts
5. Connect the lead wires to RD-AP-1568 in the antenna housing by referring to the Interconnection Diagram. Fasten the ground washer at the bottom of the antenna housing as shown in Figure 6-9.

Figure 6-9 Connection in the antenna housing

Final preparation

1. Place the antenna housing cover on the housing, Loosely fasten the four fixing bolts on the cover.

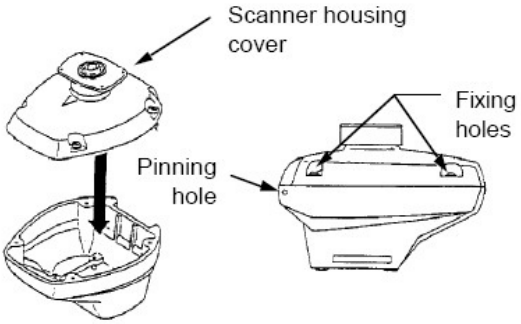

Figure 6-10 Fastening the antenna housing cover

2. Apply grease to the two slot pins. Using a wooden hammer to prevent damage to paint, insert slotted pins into the pinning holes until the pin head is flush with the scanner housing surface.

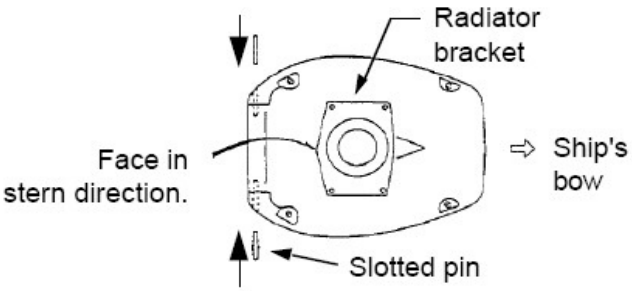

Figure 6-11 How to insert slot pins

3. Now is the time to fix the radiator to the radiator bracket. Apply anticorrosive sealant (silicone sealant) to hatched areas, to prevent corrosion. See the figure below.Apply silicone sealant into threaded holes on the scanner radiator. Remove the cap on the radiator bracket and orient the radiator bracket as shown in Figure 6-12. Apply grease to the O-ring and set it to the center of the radiator bracket. Coat the radiator fixing bolts with silicone sealant. Fasten the radiator to the radiator bracket with the ONWA logo on the radiator facing ship`s bow.

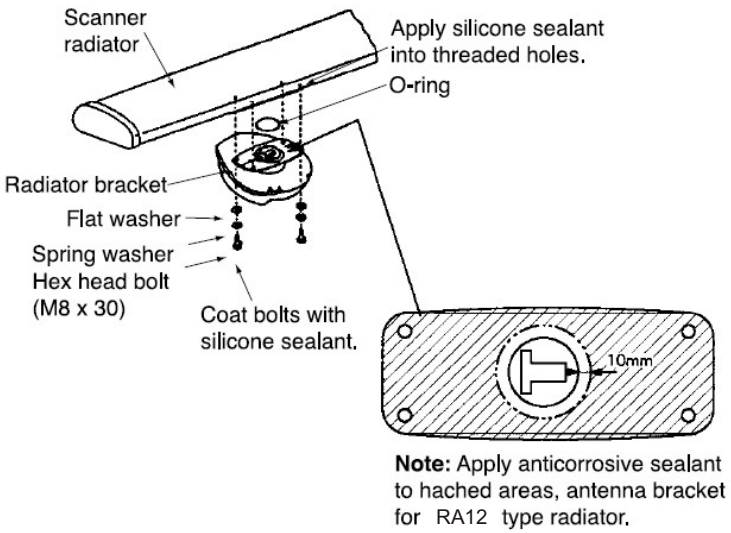

Figure 6-12 Fastening the radiator to the radiator bracket

4. Open the antenna housing cover and fix the stay as shown in Figure 6-13.
5. One end of the cable with 3- and 8 way plugs has already been connected to RD-AP-1568 inside the scanner housing. Transceiver control signal with jacks J812 and J811 on the transceiver module, respectively. Connect the 7-way plug to jack J801 on the MP Board. Secure the cable between RD-AP-1568 and J801 with the cable tie as shown in Figure 6-13.

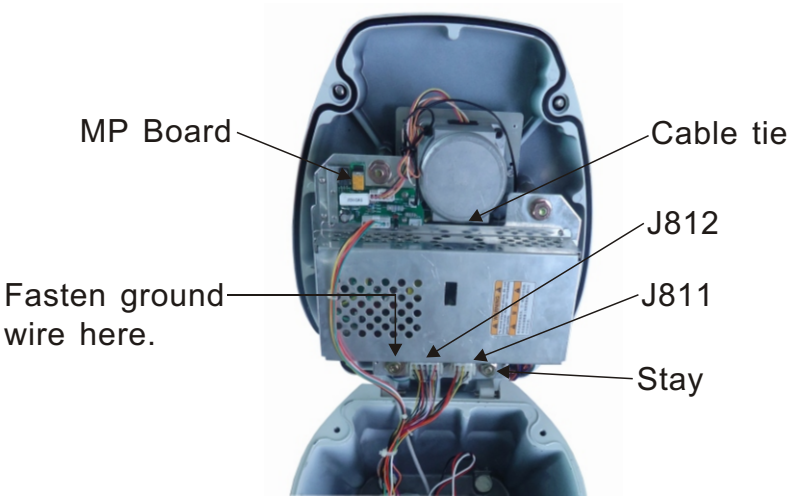

Figure 6-13 Antenna unit, cover opened

6. Fasten the ground wire (black) of the signal cable to the chassis.
7. Loosely fasten the antenna housing cover. You will tighten the fixing bolts after confirming the unit is working normally.

6.2 Display Unit Installation Mounting considerations

When selecting a mounting location for the display unit keep in mind the following points.

- Even though the display unit is waterproof, it is recommended that the display unit must be mounted inside an enchosed cabinet.
- Provide adequate space behind and around the unit to permit circulation of air and to provide convenient access to the rear connectors.
- Even though the picture is quite legible even in bright sunlight, keep the display unit out of direct sunlight or at least shaded because of heat that can build up inside the cabinet.
- Locate the display unit in a position where you can view and operate it conveniently but where there is no danger of salt or fresh water spray or immersion.
- The orientation of the display unit should be so the radar screen is viewed while the operator is facing in the direction of the bow. This makes determination of your position much easier.
- Make sure you allow enough clearance both to get to the connectors behind the unit and to allow you to get your hands in on both sides to loosen or tighten the mounting knobs. Make sure you leave at least a foot or so of "service loop" of cables behind the unit so it can be pulled forward for servicing or easy removal of the connectors.
- The compass safe distance of 0.8 meters (standard compass) and 0.6 meters (steering compass) should be observed to prevent deviation of the magnetic compass.

Mounting

The display unit is designed to be mounted on a tabletop or bulkhead.

1. Using the hanger as a template, mark screw locations in the mounting location.
2. Fix the hanger to the mounting location with five M6 tapping screws(supplied).
3. Fit the knob bolts to the display unit. Install the display unit in the hanger. Tighten the knob bolts securely.

Connections

1. Connect the power cable to the power cable connector on the rear of the display unit.
2. Connect the signal cable to connector on the rear of the display unit.
3. Run a ground wire (local supply) between the ground terminal on the rear of the display unit and the ship's superstructure.

Navigation aid, video sounder connection

If your navigation aid can output data in IEC61162(NMEA0183) data format, your vessel's position in latitude and longitude, the range and bearing to waypoint, speed and course may be input to this radar, and be seen on the screen.

Further if your video sounder can output depth in IEC 61162(NMEA 0183) data format, depth can be displayed on the radar screen.

1. NMEA1 (5 pins connector):Use for AIS

PIN No.	Function
1	GND
2	3.3V
3	NMEA1 Input+
4	NMEA1 Input-
5	Not used

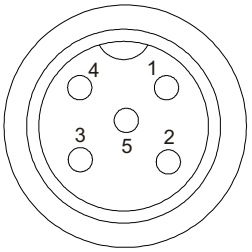

2. NMEA2 (6 pins connector):Use for other navigation device

PIN No.	Function
1	NMEA2+
2	NMEA2-
3	+12V
4	NMEA3+
5	NMEA3-
6	GND

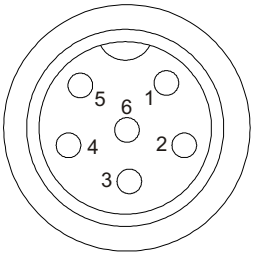

3. VGA (7 pins connector): Now not used
4. UPGRADE (4 pins connector): Upgrade interface, you need to use special upgrade cable .
5. RS-422 (8 pins connector):

PIN No.	Function
1	GND
2	OUTPUT-
3	OUTPUT+
4	INPUT-
5	INPUT+
6	+12V
7	GND
8	+12V

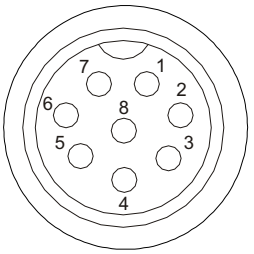

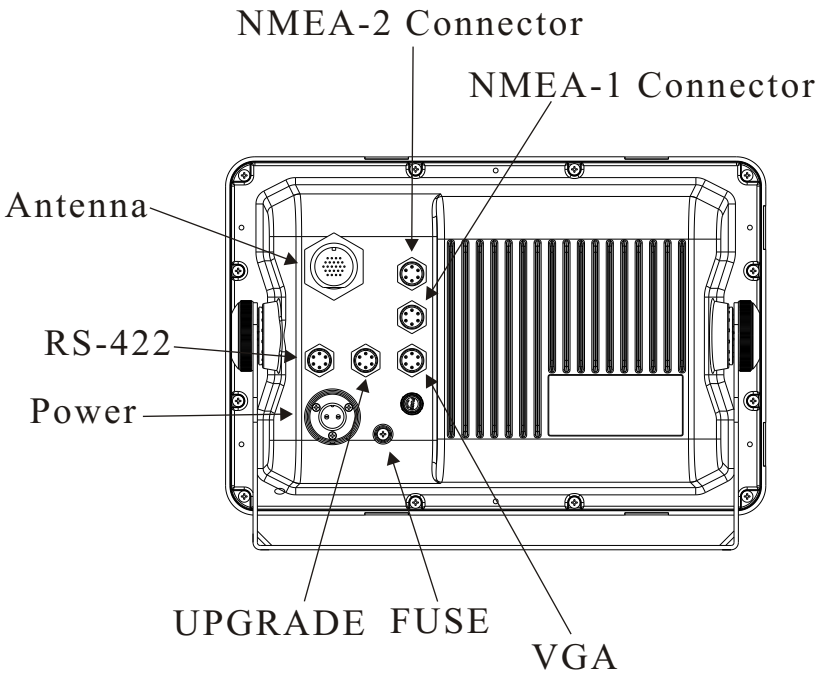

Figure 6-14 KR-1238/1268 Display connectors

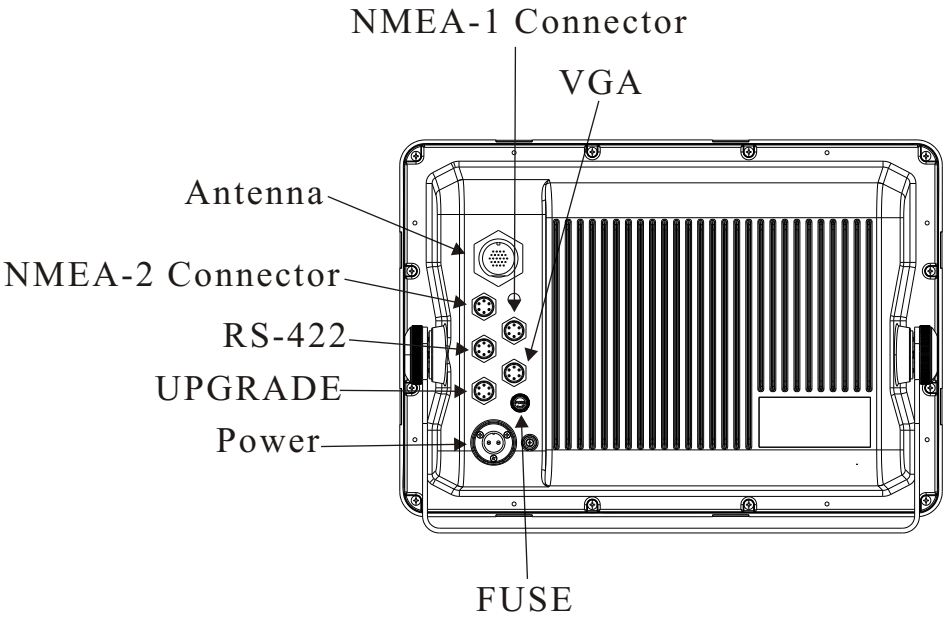

Figure 6-15 KR-1538/1568 Display connectors

CAUTION
Ground the equipment. Ungrounded equipment might emit or receive electromagnetic interference or cause electrical shock

CAUTION
Replace ther fuses to 5A for 24/32VDC operation

6.3 Exchange of Fuse for 24/32V Power Supply

The power cable comes with a 10A fuse in the fuse holder. This fuse is for use with a 12V DC power supply. For 24V/32V DC power supply, replace the fuse with the 5A fuse (supplied) to fuse holder.

6.4 Checking the Installation

After completing the installation, it is a good idea to recheck it to be sure all steps were correctly done. Use the table 6-1 to check the installation.

Tick box (Table 6-1)

- The signal cable is securely retained against the mast or mounting platform and is free of interference from running rigging
- The cable gland or entry on the deck, if provided, is waterproofed
- The power connections to the battery are of correct polarity
- The plugs at the rear of the display unit are tightly fastened
- The fuse in the power cable is 10A (12V) or 5A (24V/32V DC)

6.5 Adjustments

This section covers adjustment of the radar after installation.

You will need to

- adjust tune/video amplifier level input
- enter antenna height
- adjust tuning level
- adjust sweep timing
- adjust main bang suppression
- setting a blanking area

These adjustment are done through the radar install menus.

Preparation

1. Turn off the radar. While pressing and holding down the [**GAIN**] control press the [**POWER**] key.
2. Release [**GAIN**] control knob when you see "ONWA" logo and wait for finish standby (finish count down).
3. Press the [**MENU**] key, and select "FUNCTION MENU" by using the omnipad, and pressing [**ACQ/ENTER**] key.
4. Select "INSTALLATION SETUP".
   Press the [**ACQ/ENTER**] key to open the installation setup menu.

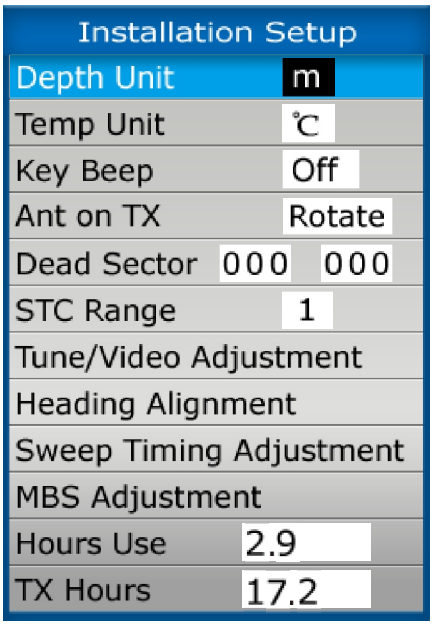

Figure 6-16 Installation setup menu

Adjusting tune/video

Do the following to adjust tune and video amplifier level input.

1. Press the [**ST BY/TX**] key to transmit.

⚠ WARNING

Before transmitting the radar make sure no one is near the antenna unit, to prevent the potential risk of being struck by the rotation antenna and exposure to radiation hazard.

2. On the Installation setup menu, select "TUNE/VIDEO ADJUSTMENT" and press the [**ACQ/ENTER**] key.
3. The unit automatically adjusts, displaying the following message.

[Tune/Video Auto Adjustment]

Now under correction.

Return to installation setup menu after the correction.

Figure 6-16 Tune/Video Auto Adjustment messages

4. When adjustment is completed, the messages disappears.

Entering STC range

1. Select "STC RANGE" on the installation setup menu and press the [**ACQ/ENTER**] key.
2. Operate the omnipad to select 1 (about 6NM), 2 (about 4NM), 3 (about 3NM), 4 (about 2NM)
3. Press the [**ACQ/ENTER**] key.

Aligning heading (Adjustment sector:0~359.90)

You have mounted the antenna unit facing straight ahead in the direction of the how. Therefore, a small but conspicuous target dead ahead visually should appear on the heading line (zero degrees).

In practice, you will probably observe some small error on the display because of the difficulty in achieving accurate initial positioning of the antenna unit. The following adjustment will compensate for this error.

1. Identify a suitable target (for example, ship or buoy) at a range between 0.125 to 0.25 nautical miles, preferably near the heading mark. To lessen error, keep echoes in the outer half of the picture by changing the range. Aiso, be sure the zoom and off center functions are off.
2. Select "HEADING ALIGNMENT" on the installation setup menu and press the [**ACQ/ENTER**] key. The following message appears on the display.

```
[ Heading alignment ]
Set EBL1 to center of target
dead ahead and press ENTER.

Correction     0.0°

<Press MENU for inst setup>
```

Figure 6-17 Heading alignment message

3. Operate the omnipad to bisect target selected at step 1 with the heading line.
4. Press the [**ACQ/ENTER**] key.
5. As a final test, move the boat towards a small buoy and confirm that the buoy shows up dead ahead on the radar when it is visually dead ahead.

Adjusting sweep timing(Adjustment range:0.000~4.266nm)

This adjustment ensures proper radar performance, especially on short ranges. The radar measures the time required for a transmitted echo appears on the display based on this time. Thus, at the instant the transmitter is fired, the sweep should start from the center of the display (sometimes called sweep origin.) A trigger pulse generated in the display unit goes to the antenna unit through the signal cable to trigger the transmitter (magnetron). The time taken by the signal to travel up to the antenna unit varies, depending largely on the length of signal cable. During this period the display unit should wait before starting the sweep. When the display unit is not adjusted correctly, the echoes from a straight local object (for example, a harbor wall or straight pier) will not appear with straight edges - namely, they will be seen as "pushed out" or "pulled in" near the picture center. The range of objects will also be incorrectly shown.

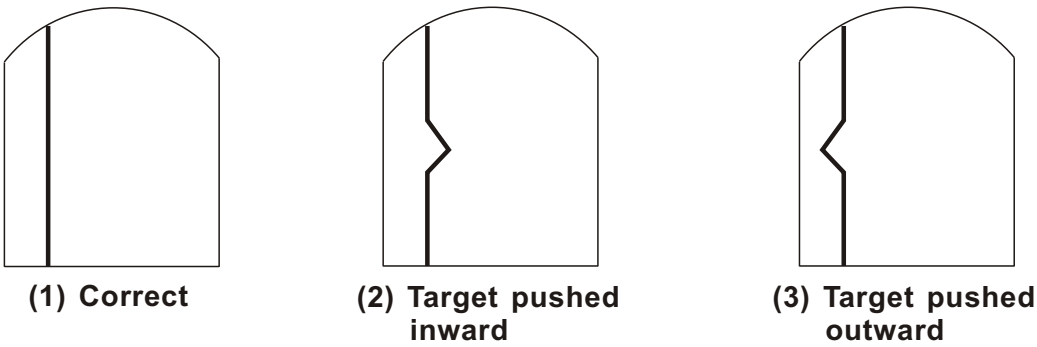

Figure 6-18 Examples of improper and correct sweep timing

1. Transmit on the shortest range and confirm that the [**GAIN**] and [**STC**] controls are properly adjusted.
2. Visually select a target which forms straight line (harbor wall, straight pier).
3. Select "SWEEP TIMING ADJUSTMENT" on the installation setup menu and press the [**ACQ/ENTER**] key. The message appears.

```
[ Sweep Timing Adjustment ]
Use omnipad to staighten
Target and press ENTER key.

Correction     0.000 nm

<Press MENU for inst setup>
```

Figure 6-19 Sweep timing adjustment message

4. Operate the omnipad to straighten the target selected at step 2, and then press the [**ACQ/ENTER**] key.

Adjusting MBS (Main Ban Suppression) (Adjustment: 0.00~0.25)
Main bang (black hole), which appears at the display center on short ranges, can be suppressed as follows.

1. Transmit on long range about 10 minutes.
2. Adjust the gain to show a small amount of noise on the display.
3. Change to the 0.125 nautical mile range and adjust the [**A/C SEA**] control.
4. Select "MBS ADJUSTMENT" on the installation setup menu.
5. Press the [**ACQ/ENTER**] key. The following message appears.

```
[MBS Adjustment ]
Set value by omnipad
and press ENTER key
Correction    000
<Press MENU for inst setup>
```

Figure 6-20 MBS Adjustment message

6. Operate the omnipad to suppress main bang.(Left: low, right, between 0 and 25)
7. Press the [**ACQ/ENTER**] key.

Setting a blanking area
When the antenna is installed at a close distance in front of the wheelhouse, the radar should be set not to transmit within that area. No echoes appear in the blanking areas.

1. Select "DEAD SECTOR".
2. Press the [**ENTER**] key.
3. Operate the omnipad to enter staring point of area (in figures).
4. Press the [**ENTER**] key.
5. Operate the omnipad to enter ending point of area (in figures).
6. Press the [**ENTER**] key.

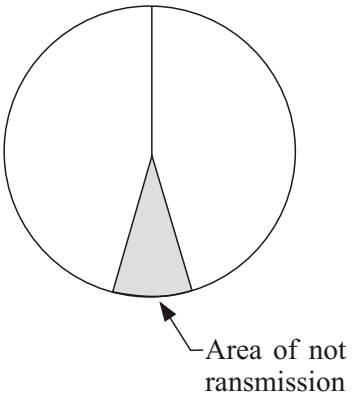

Figure 6-21 Blank areas where transmission is suspended

This area can be turned on/off on the VIDEO MENU.
Note: This setting should be done after other adjustment are finished.

Magnetron heater voltage

Magnetron heater voltage is formed at the MOD Board of the antenna unit and preadjusted at the factory for use with any length of signal cable. Therefore no adjustment is required. However, verify heater voltage by following the procedure below.

1. Turn on the radar(if it is not already on) and set it in stand-by.
2. Open the antenna housing (radome) cover. Connect a multitester, set to 10V DC range.

Model	Check point	Rating	Adjustment Point
KR-1238/1538	Tp803 #4,#6 on MD Borad	7.4~7.6V	VR801
KR-1268/1568	Tp803 #4,#6 on MD Borad	7.4~7.6V	VR801

3. Close the antenna housing cover and tighten the fixing bolts.

⚠ WARNING

This auto plotter is not designed to replace the human eye nor make decisions for the navigator. It is intended for use as an aid to navigation. Always maintain a watch while underway. Data obtained from this auto plotter should always be double checked against other sources to verify the reliability of the data.

This auto Plotter automatically tracks a acquired radar target and calculates its course and speed. Indicating it by a vector, Since the data generated by this unit are based on what radar targets are selected, the radar must always be optimally tuned for use with it to ensure that required targets will not be lost or unwanted targets such as sea returns and noise will not be acquired and tracked.

A target echo does not always mean a landmass, reef, ships or other surface objects but can imply returns from sea surface or precipitation. As the level of these returns varies with environment, the operator is required to properly adjust the STC (ant-clutter sea), FTC (anti-clutter rain) and GAIN controls to ensure that target echoes within the affected area are not eliminated from the radar screen. The optimum settings of these controls may slightly differ between the normal radar operation and plotting, and it is recommended to readjust them in accordance with the operating mode selected.

NOTICE

The installation must be done by a ONWA representative or suitably qualified radar technician. Authorities require this.

Keep magnets and magnetic fields away from the equipment.
Magnetic fields will distort the picture and can cause equipment malfunction. Be sure the unit is well away from equipment which gives off magnetic fields (speaker, power transformer, etc.).

The following items affect calculation accurary.

- echo intensity
- radar transmission pulsewidth
- radar bearing error
- gyrocompass error
- own vessel or other vessel course change

Data for CPA, TCPA, ect. Are approximations only. Always use data obtained prudently.

Operation of ARPA

General

The Auto Plotter permits manual or automatic acquisition and automatic tracking of up to 20 radar targets. An internal microprocessor calculates target data such as speeds and courses and display the results in alphanumeric and by vectors. To ensure the reliability of the displayed target data, the radar must be properly adjusted for minimum sea returns and noise.

Principal Specifications

Acquisition and tracking:

- Acquisition of up to 20 targets between 0.2 and 16 nm.
- Automatic tracking of up to 20 acquired targets between 0.1 and 16 nm.

Vectors:

Vector length; 30s, 1,3,6,15,30 min.

Orientation; True velocity or relative velocity

Past positions: 5 past positions at intervals of 15,30s,1,2,3,6 min.

Alarm: Visual and audible alarms against targets violating CPA/TCPA limits, Visual alarm against lost targets

Target discrimination: A target measuring about 800 m or more in the radial or circumferential direction is regarded as a landmass and not acquired or tracked. Echoes smaller than about 800 m are regarded as true targets.

Key Used Auto Plotter

The Auto plotter utilizes the following touchpad keys. Given below is a brief description of these keys.

MENU: Display/Erase the main menu.

SELECT/CANCEL:

(Long press) Terminates plotting of the target selected with the cursor.
(Brief press) Displays the data of target selected with the cursor.

ACQ/ENTER: Acquires the target selected with the cursor.

ARPA MENU Operation

The ARPA MENU operation includes the followings;

Display: Turns on/off the plot symbols, past positions and target data.

All Cancel: Cancels the tracking of all targets.

Vector Ref: Selects relative vector or true vectors. To select your choice, open the ARPA menu, and the legend Rel and True appear on the "3. Vector Ref" line. Operate the omnipad. When your selection is in the reverse video, press the [**ACQ/ENTER**] key.

Vector Length: Selects vector time.

History: Selects past position plot interval.

CPA Set: Selects CPA alarm limit, When a target is predicted to come within this limit, an aural alarm sounds and at the same time the corresponding target symbol changes to a blinking triangle.

Note: If the preset CPA limit is set at OFF, a target which is on collision course will not produce an alarm.

TCPA Set: Selects TCPA alarm limit.

Auto ACQ: Turns on/off Auto Acquisition Area.

Activating the Auto plotter

To activate the Auto Plotter, follow the steps shown below:

1. Adjust the GAIN, A/C SEA and A/C RAIN controls for proper radar picture.
2. Press the [**MENU**] key to open the main menu.
3. Operate the omnipad to select "ARP MENU".
4. Press the [**ACQ/ENTER**] key. The menu shown in Figure AP-1 appears.
5. Operate the omnipad to select the menu item "DISPLAY".
6. Operate the omnipad to select "ON".
7. Press the [**ACQ/ENTER**] key.
8. Press the [**MENU**] key to close the menu.

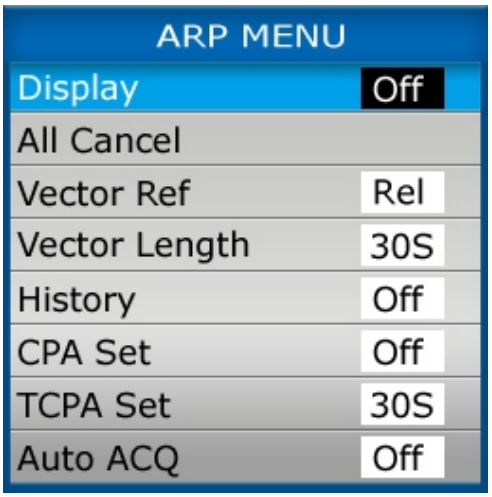

Figure AP-1 ARP Menu

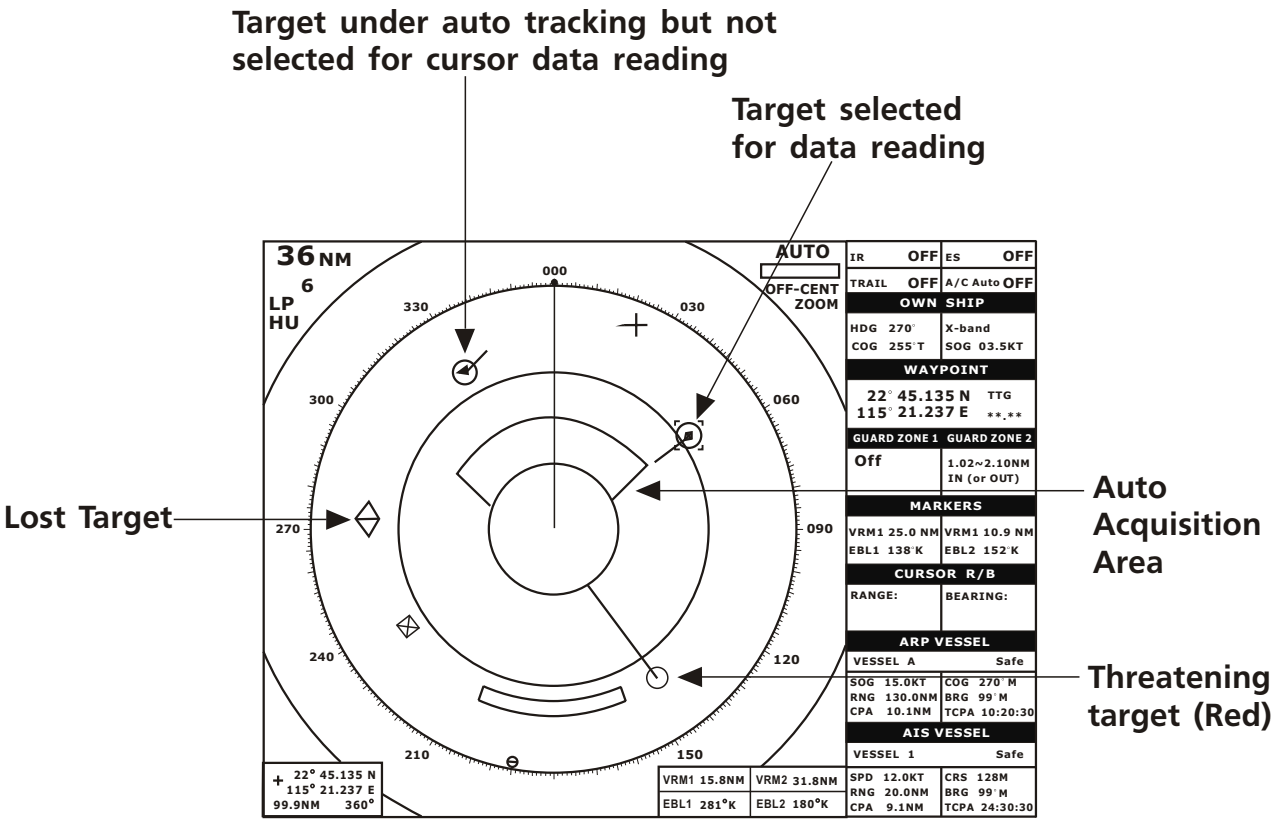

Figure AP-2 ARPA Display

Deactivation the Auto Plotter

To deactivate the Auto Plotter.

1. Open the "ARP MENU".
2. Operate the omnipad to select the "DISPLAY".
3. Operate the omnipad to select "OFF".
4. Press the [**ACQ/ENTER**] key.
5. Press the [**MENU**] key to close the menu.

Acquiring targets

Manual Acquisition

Follow the steps below to manually acquire a target. Up to 20 target can be manually acquired.

1. Place the cursor(+) on a target of interest by operating the omnipad.
2. Press the [**ACQ/ENTER**] key.

The plot symbol changes its shape according to the status as below. A vector appears in about one minute after acquisition indicating the target's motion trend. If the target is consistently detected for three minutes, the plot symbol changes to a solid mark. If acquisition fails, the target symbol blinks ans disappears shortly.

CIRCLE (dotted)

Immediately after acquisition - Plot symbol shown in broken lines.

CIRCLE (dotted with a vector)

One minute after acquisition - Vector still unreliable.

CIRCLE(Soild with a vector)

3 minutes after acquisition - Plot symbol changes to a solid circel indicating the stable tracking condition.

FRAME CIRCLE

The plot symbol of a target under tracking becomes a circle with a discontinuous outline when the target is selected for data reading.

Note 1: The target to be acquired should be within 0.2 to 16 nm from own ship and not obscured by sea or rain clutter for successful acquisition.

Note 2: When you want to acquire 21th target, cancel tracking one of less important target.

Note 3: When auto acquisition mode (Auto ACQ) is on, up to 5 target can be acquired. For detail, see next section titled Automatic Acquisition.

⚠ WARNING

When a tracked target nears another tracked target the targets may be "swapped."When two target come close to each other, one of the two can become a "lost targets."Should this happen, reacquisition of the "lost target"is required after the two targets have separated.

Automatic Acquisition

The Auto plotter APRA can acquire up to 10 targets automatically by setting the Auto Ac-quisition area predefined in the system. If Auto ACQ is selected after more than 10 targets have been manually acquired, only the remaining capacity of targets can be automatically acquired. Example; when 15 targets acquired manually, then the Auto ACQ is switched on only 5 targets can be acquire automatically, When ten targets have been automatically acquired, "AUTO TARGET FULL" message appears at top left corner on the display.

Setting Auto Acquisition Area

Auto acquisition area is predefined between 2.0 and 2.5 nm in range and 45° on either side of the heading line in bearing. If a target come into this area, it is acquired automatically.

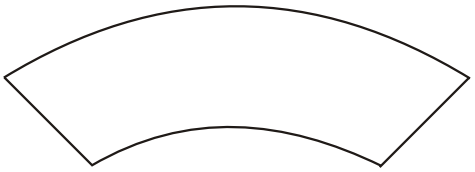

Figure AP-3 Auto acquisition area

Follow the steps shown below to activate the auto acquisition area;

1. Open the "ARP MENU".
2. Select "AUTO ACQ" by operating the omnipad.
3. Operate the omnipad to select "ON".
4. Press the [**ACQ/ENTER**] key.
5. Press the [**MENU**] key to close the menu.

Terminating Tracking of Targets

When the Auto Plotter has acquired 20 targets, no more acquisition occurs unless targets are lost. Should this happen, cancel tracking of individual target or all targets by the procedure described below.

Individual Targets

Place the cursor (+) on a target which you do not want to be tracked any longer by operating the omnipad and press andgold down the [SELECT/CANCEL] key.

All Targets

All targets can be canceled from "ARPA MENU" at a time.

1. Open the "ARP MENU".
2. Select "ALL CANCEL".
3. Press the [**ACQ/ENTER**] key.

Displaying Target Data

The Auto Plotter calculates motion trends (range, bearing, course, speed, CPA and TCPA) of all targets under tracking at the ARP Data area.

⚠ CAUTION
At the speed under 5 kts the target data is displayed with a delay because of the filtration

Place the cursor on a wanted target and press the [SELECT/CANCEL] key. Data on the selected target is displayed at the bottom of the screen. The symbol of the selected target gets Surrounded by a broken square frame. The data includes the follows;

RNG/RBG (Range/Bearing): Range and bearing from own ship to the last-plotted or selected target position with suffix "T"(Ture) or "M"(Magnetic). For ture bearings suffix "T" is used in case of gyrocompass input and suffix "M" is used in case of magnetic compass input.

COURSE/SPEED (Course/Speed):
Course and speed are displayed for the lastplotted or selected target with suffix "T"(Ture) or "M"(Magnetic). For true bearings suffix "T"is used in case of gyrocompass input and suffix "M"is used in case of magnetic compass input.

CPA (Closest Point of Approach) is the closest range a target will approach to own ship. Do not mix it with the operator preset CPA alarm limit.
TCPA is the time to CPA measured with present speeds of own ship and the targets. Both CPA and TCPA are automatically calculated. When a target ship has passed clear of own shop, the CPA is displayed and the TCPA appears as "**". TCPA is counted up to 99.9 min. And beyond this it is indicated as TCPA>99.9 min.

Mode and length of Vectors

Ture or Relative Vector
Target vectors are displayed in relative or true mode. Own shop does not have a vector in relative mode.

Vector Length
From the ARPA MENU, Vector Length can be set to 30 seconds,1,3,6,15 or 30 minutes and the selected vector time is indicated on the screen.

The vector tip shows an estimated position of the target after the selected vector time elapses. It can be valuable to extend the vector length to evaluate the risk of collision with any target.

Past position Display
The Auto Plotter displays equally time-spaced dots(maximum 5 dots) marking the past positions of any targets being tracked.

If a target changes its speed, the spacing will be uneven. If it changes the course, its plotted course will not be a straight line in TM mode.

Operational Warnings
There are two main situations which cause the Auto plotter to trigger visual and audible alarms.
- CPA/TCPA alarm
- Lost target alarm

CPA/TCPA Alarm

Visual and audible alarm are generated when the predicted CPA and TCPA of any target become less than their preset limits. The audible alarm continues for 10 seconds.

The Auto plotter ARPA continuously monitors the predicted range at the Closest Point of Approach (CPA) and predicted time to CPA(TCPA) of each tracked target to own ship.

When the predicted CPA of any target becomes smaller than a preset CPA alarm range and its predicted TCPA less than a preset TCPA alarm limit, the ARPA releases an audible alarm. In addition, the target plot symbol changes to a triangle and flashes together with its vector.

Provided that this feature is used correctly, it will help prevent the risk of collision by alerting you to threatening targets, It is important that GAIN, A/C SEA, A/C RAIN and other radar controls are properly adjusted and the Auto Plotter is set up so that it can track targets effectively.

CPA/TCPA alarm ranges must be set up properly taking into consideration the size, tonnage, speed, turning performance and other characteristics of own ship.

⚠ WARNING

The CPA/TCPA alarm feature should never be relied upon as a sole means for detecting the risk of collision. The navigator is not relieved of the responsibility to keep visual lookout for avoiding collisions, whether or not the radar or other plotting aid is in use.

Follow the steps shown below to set the CPA/TCPA alarm ranges:

1. Open the "ARP MENU".
2. On the "CPA SET" line, select a CPA limit desired.(Off,0.5,1,2,3,5,6nm)
3. Press the [**ACQ/ENTER**] key.
4. On the "TCPA SET" line, select a TCPA limit desired.(30s,1,2,3,4,5,6,12M)
5. Press the [**ACQ/ENTER**] key.
6. Press the [**MENU**] key to close the menu.

The flashing of the triangle plot symbol and vector remain on the screen until the dangerous situation is no longer present or you intentionally terminate tracking of the target by using the [**SELECT/CANCEL**] key.

Lost Target Alarm

When the system detects a loss of a tracked target, the target symbol becomes a flashing diamond.

How AIS Works

Automatic Identification System (AIS) is a reporting system used in the identification of marine vessels and its location. Vessels equipped with this system allows each other to communicate automatically, dynamically and regularly update their position, speed, course and information such as vessel identity.

How does AIS function as a radar?

The AIS radar function does not refer to its own AIS system and its features such as the VHF T/R and Letter Machine but by serial interface through (NMEA) which will be received by the AIS and sent to the radar on a real time displayed on the radar screen.

How to start the AIS radar feature?

1.Press [**MENU**] key to open the main menu.

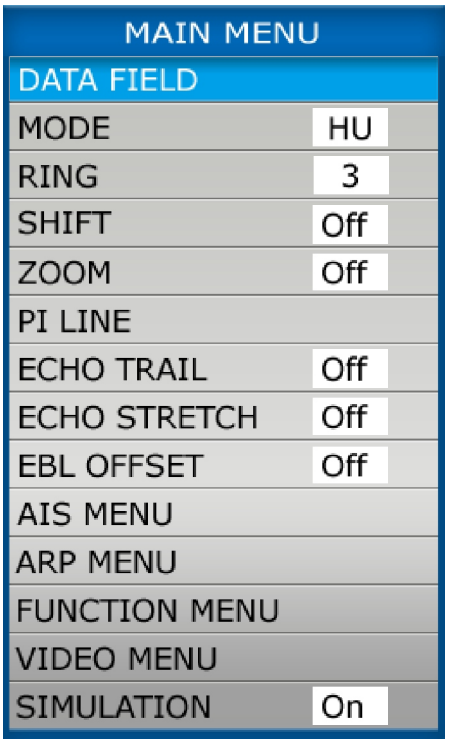

Figure 1 Main menu

2. Select [**AIS MENU**] & press [**ACQ/ENTER**] key, Select "DISPLAY", press [▲] or [▼] key select "ON" & press **[MENU]** key to return. Now if "AIS" word appears on the upper screen of the display, The AIS symbol is shown in the radar echo area.

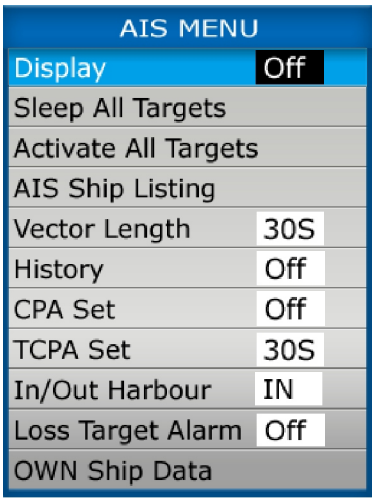

Figure 2 AIS menu

NOTE: If the AIS signal is received, the AIS function is still at work even when the signal does not appear and still continues to ensure real time AIS information.

How to check the information received from Ships with AIS ?

In the AIS menu, select "AIS SHIP LISTING" and press [**ACQ/ENTER**]. The AIS tabulation will appear and demonstrate the other ships basic information.

Figure 3 AIS Ship Listing

How to determine the target ships detailed information?

There are two methods by which we can view a ships sailing detailed information:

1. By keyboard

From the list of AIS information, select the direction key and press [**ACQ/ENTER**] , on Figure 3 , the detailed data of the current selected ship information shall be displayed.

2. By cursor

When the cursor is moved to the target ship and press [**ENTER**] key, the selected ship will appear as shown in Figure 4 and the AIS data shall appear as shown in Figure 5.

Note: If the display setting of the radar screen is at "ALL" mode, it will briefly display the AIS information as shown in Figure 6.

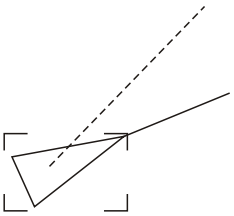

Figure 4 Selected target display

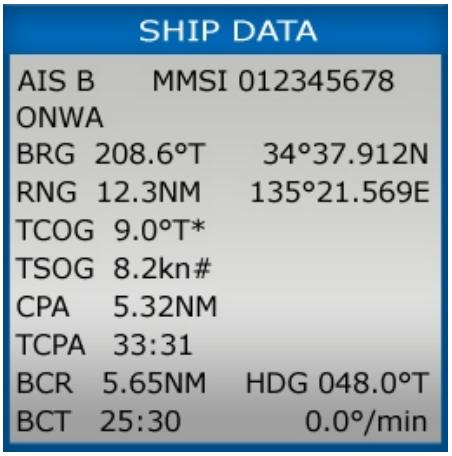

Figure 5 AIS Detailed data frame

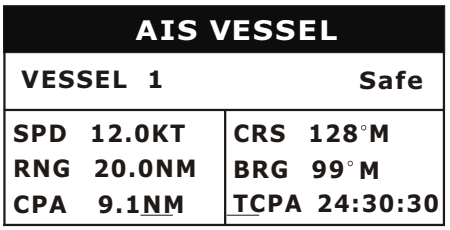

Figure 6 AIS brief information

How to view your ships AIS information?

Press AIS menu, select "OWN SHIP DATA" then AIS detailed information will appear as shown in Figure 7.

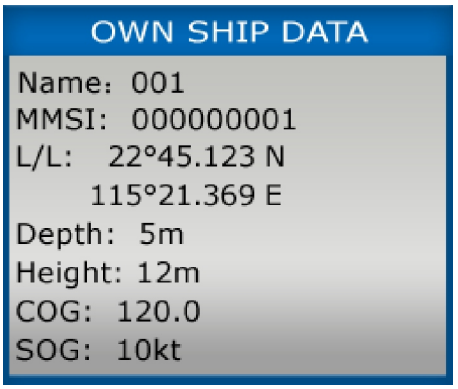

Figure 7 Own Ship data

Setting vector length of time

This function is used to set your ship and target ships vector length. The mark represents the vector in accordance with the present voyage. This value is just an estimate and it will follow the ships movement. However it can help simplify the radar operators intuitive navigation judgement.

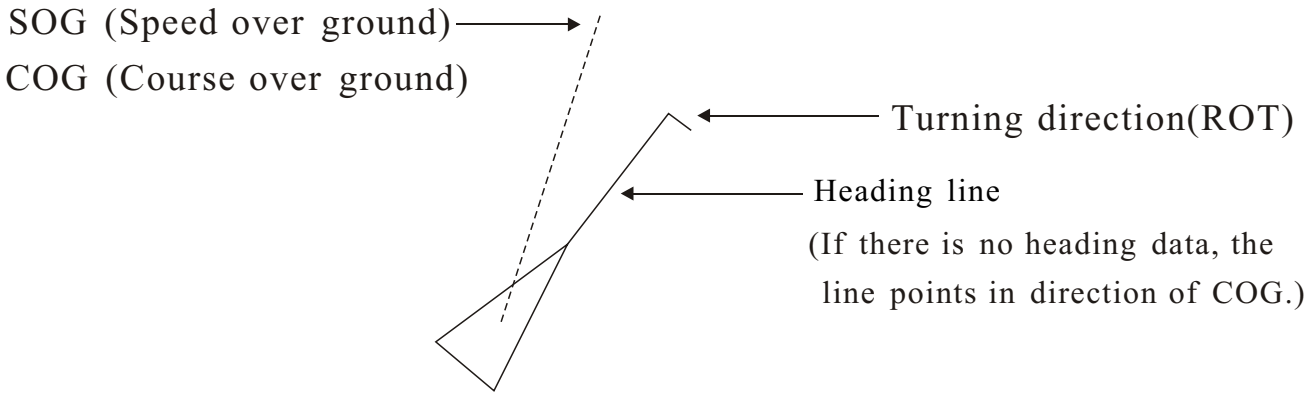

Figure 8 Activated target

Setting method:

Enter AIS menu, select "VECTOR LENGTH" and press [**ACQ/ENTER**] key, then use the direction key choose corresponding time, and press the [**ACQ/ENTER**] key.

Past Position Display

The past position display shows equally time-spaced dots marking past positions of activated AIS targets. A new dot is added at preset time intervals until the preset number is reached. If a target changes its speed, the spacing will be uneven. If it changes course, its plotted course will not be a straight line.

Below are sample past position displays.

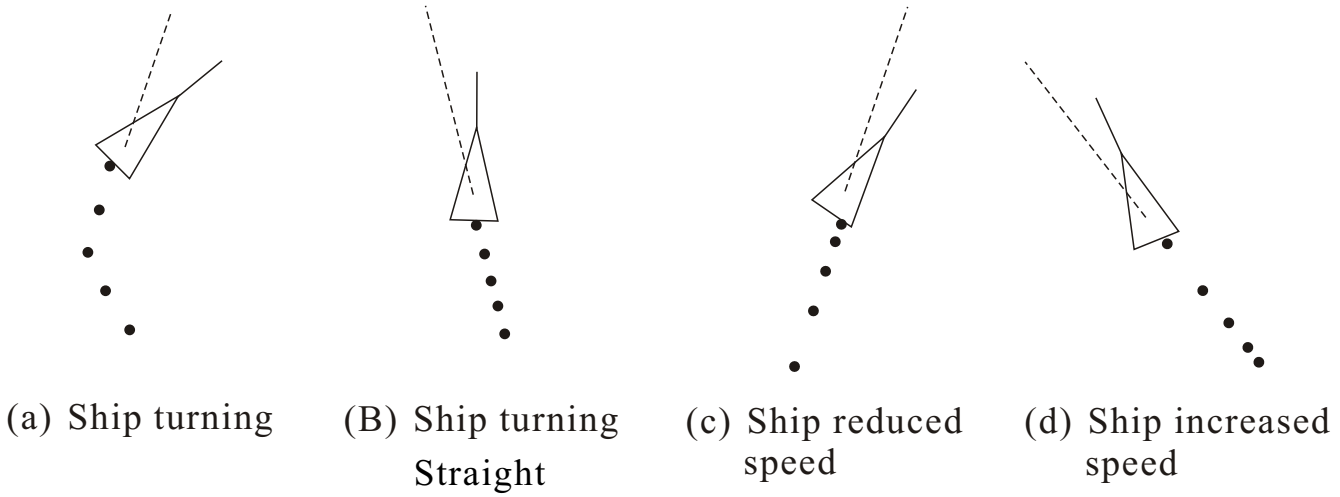

Figure 9 Sample past position displays

Past position plot interval

Enter AIS menu, select "HISTORY" to select plot interval desired: Off, 15s, 30s, 1, 2, 3 or 6 min. Select OFF to erase all past position points and turn off the past position display.

AIS Collision Alarm (CPA, TCPA)

The AIS continuously monitors the predicted range at the Closest Point of Approach (CPA) and predicted time to CPA (TCPA) of each AIS target. When the predicted CPA of an AIS target becomes smaller than a preset CPA range and its predicted TCPA less than a preset TCPA limit, the audio alarm sounds and the symbol of the offending AIS target becomes red, bold 2 times and flashes together with its vector.

CPA/TCPA alarm ranges must be set up properly taking into consideration the size, tonnage, speed, turning performance and other characteristics of own ship.

Setting the CPA and TCPA ranges

Enter AIS menu, select "CPA. SET" & "TCPA. SET", then press direction key choose the value you want.

Below are CPA & TCPA can be setup value
CPA. Set Off, 0.5, 1, 2, 3, 5, 6 nm
TCPA. Set 30 s, 1, 2, 3, 4, 5, 6, 12 min

In/Out harbour

This function is used to avoid ships in the harbour because too many AIS boats nearby may cause continuous alarm. Upon entering the port you may select "ON" , CPA and TCPA alarm will be disabled.

Setting IN/OUT harbour

Enter AIS menu, select "IN/OUT HARBOUR", use direction key to set.

Loss target alarm function

If the current range of AIS targets within the information given by the maximum update interval had not yet received, will be loss target alarm function is triggered, in this case, the target becomes the symbol shown below loss target mark, symbol color is red and flash, while the radar alarm will sound to remind the operator out to pay attention. To manually stop the audible alarm, press the [**SELECT/CANCEL**] key once.

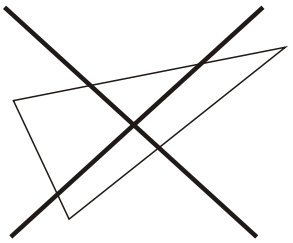

Figure10 loss target display symbol

How to open the loss target alarm function

Did not turn this function on the LOSS target symbol will still be displayed, but does not trigger the alarm. Start as follows:

1. Into the AIS menu and select "LOST TARGET ALARM";
2. Press the arrow keys to select "ON" and press the [**ACQ/ENTER**];
3. Press [**MENU**] key 2 times to exit.

Prompted of data processing

The radar system can access a variety of NMEA data, including AIS / GPS, direction and water depth data. At boot time, if not turned on AIS, the radar will appear on-screen prompts such as: "No AIS device." To know there are many, such as "AIS signal loss" etc. To turn off the prompt, press the [**ACQ/ENTER**] key.

AIS ship symbol status description

SYMBOL	STATUS	REMARKS
	Sleeping target	An isosceles, acute-angled triangle should be used with its centroid representing the target's reference position. The most acute apex of the triangle should be aligned with the heading of the target, or with its COG, if heading information is not available. The symbol of the sleeping target may be smaller than that of the activated target.
	Activated target	All AIS symbols shown with thick line.
	ROT higher than preset ROT	Displayed for turning ship.
	Target selected for data display	Broken square is overlaid on target selected to display its data.
	Dangerous target	Displayed when CPA/TCPA is within CPA/TCPA LIMIT. Red in color. Flashing .u ntil acknowledged.
	Lost target	“X” overlaid on a lost target. Erased after acknowledged.

Figure13 AIS ship symbol description

Other symbol description

Other AIS symbols that may appear are shown in the table below.

SYMBOL	Meaning
	Real AIS AtoN
	Virtual AIS AtoN
	Base Station
	Airborne SAR aircraft
	AIS SARTS

Figure 14 Other symbol

NO.	TYPE	COLOR	REMARK
1	Military	Gray	
2	Yacht/Fishing/Class B	Pink	
3	Tanker/Cargo	Orange	
4	Cruise ship	Violet	
5	Tug/Pilot	White	
6	Unknows	Blue	When blue background is Black.
7	ATON	Red	
8	SART	Red	
9	Selected target frame	With the selected target color.	
10	Loss Target	Red	
11	Danger Target	Red	

Figure15 AIS Icon Color Description

9. DISPLAY UNIT AND ANTENNA UNIT SIZE

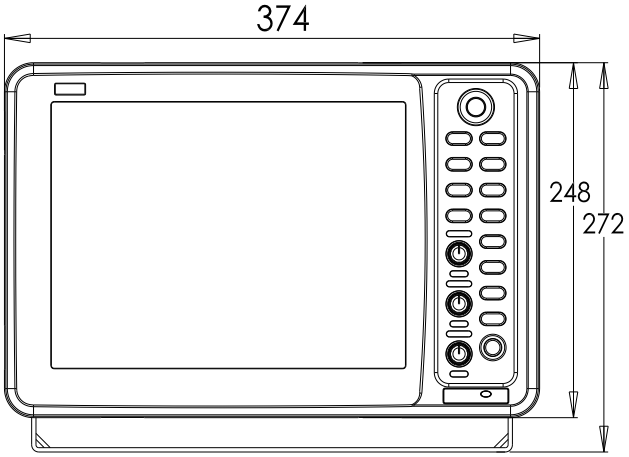

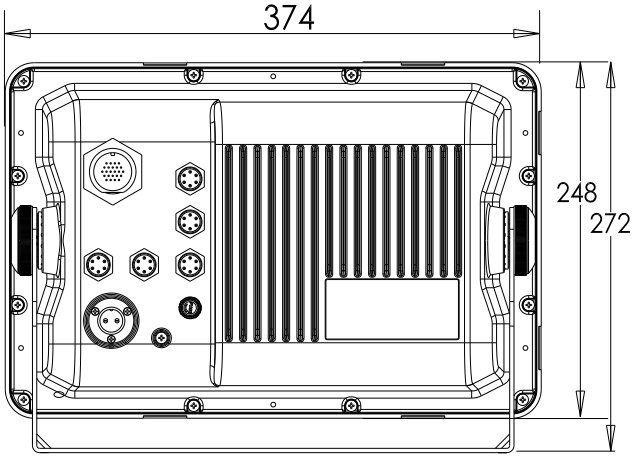

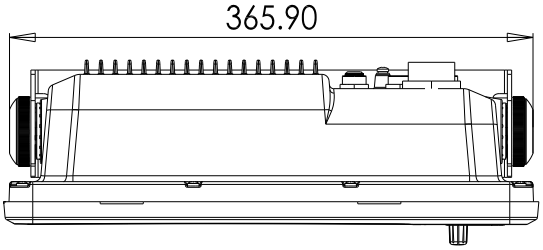

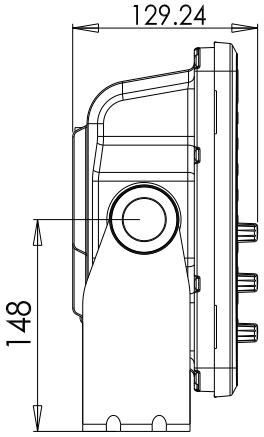

	TYPE:	KRD-1005
KR-1238	NAME:	DISPLAY UNIT
KR-1268		

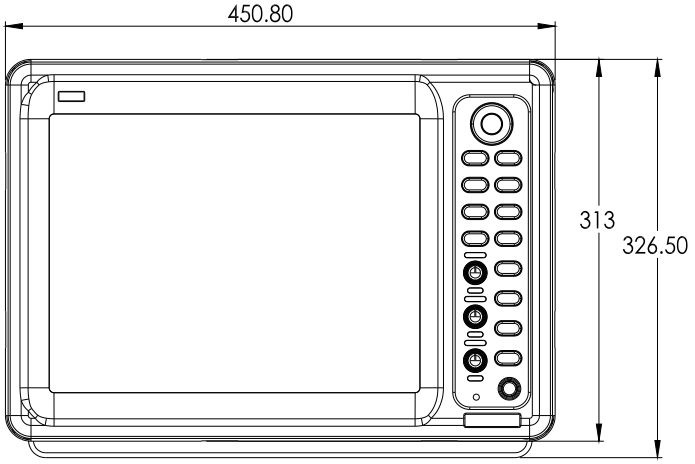

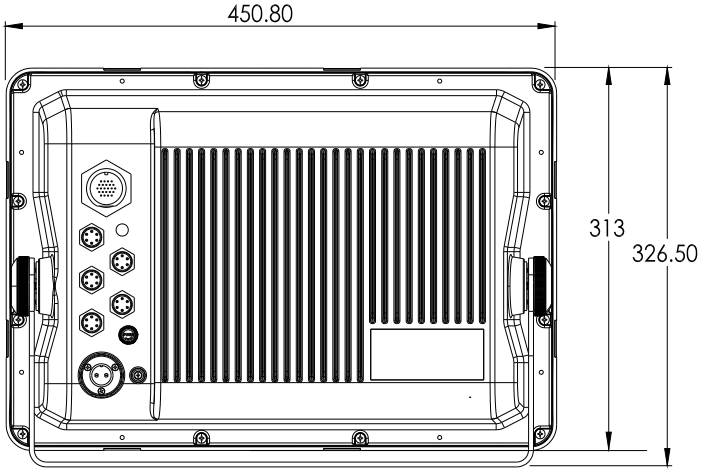

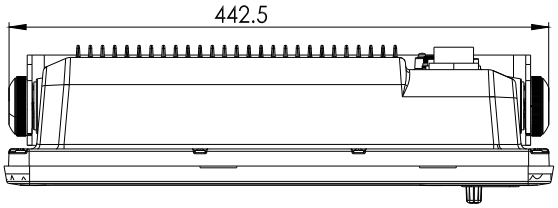

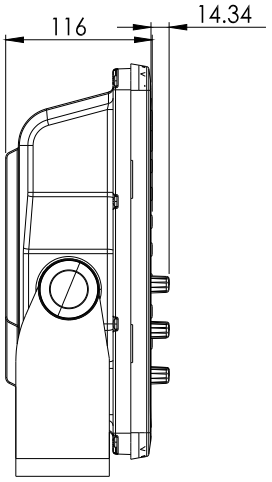

	TYPE:	KRD-1006
KR-1538	NAME:	DISPLAY UNIT
KR-1568		

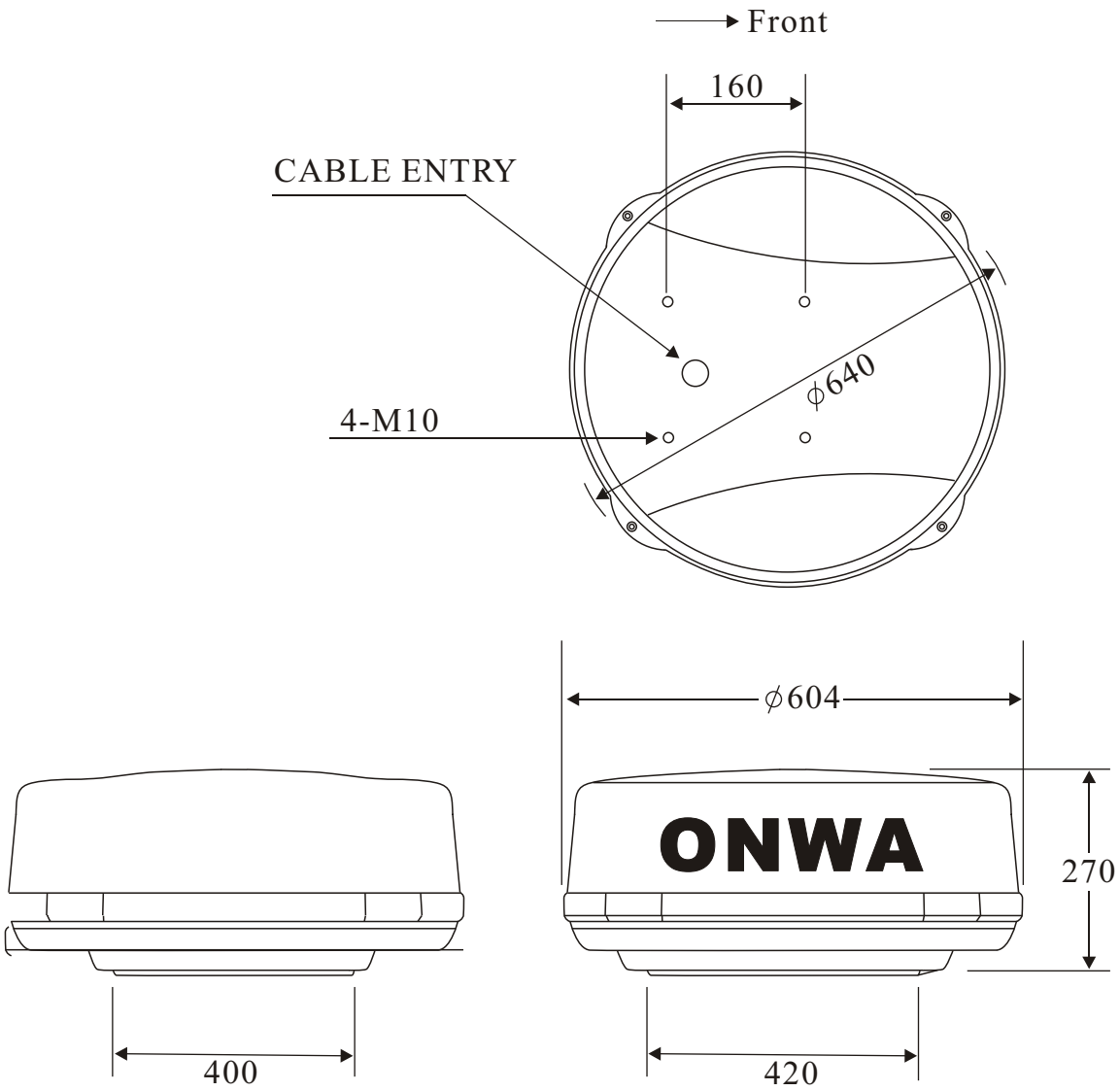

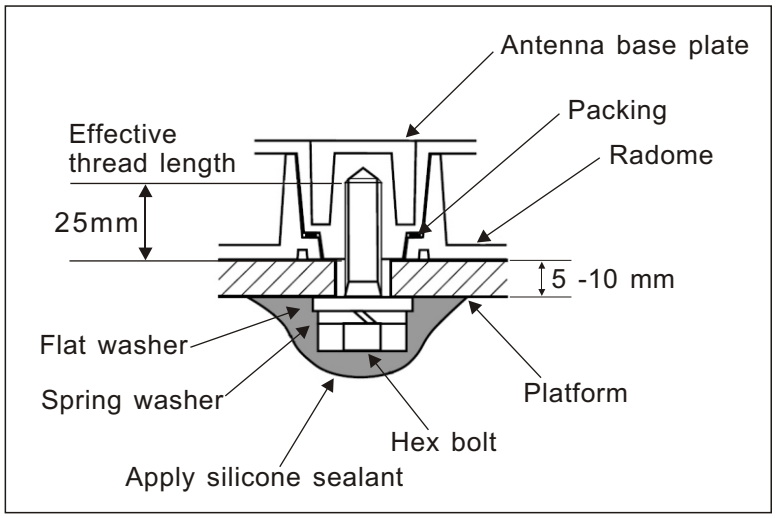

KR-1238 KR-1538	MODE: KRA-1003
	NAME: SCANNER UNIT

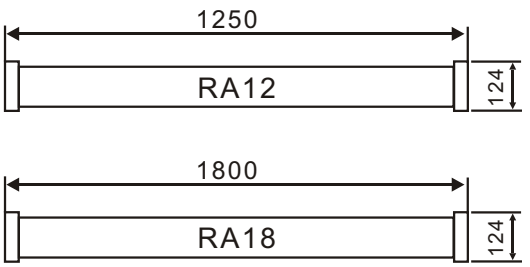

RADIATOR（S=1/25）

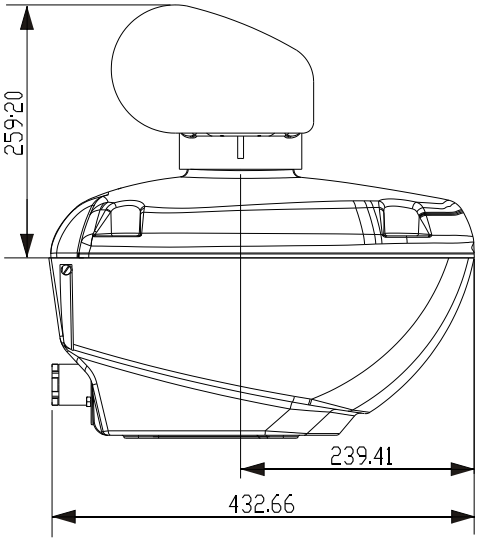

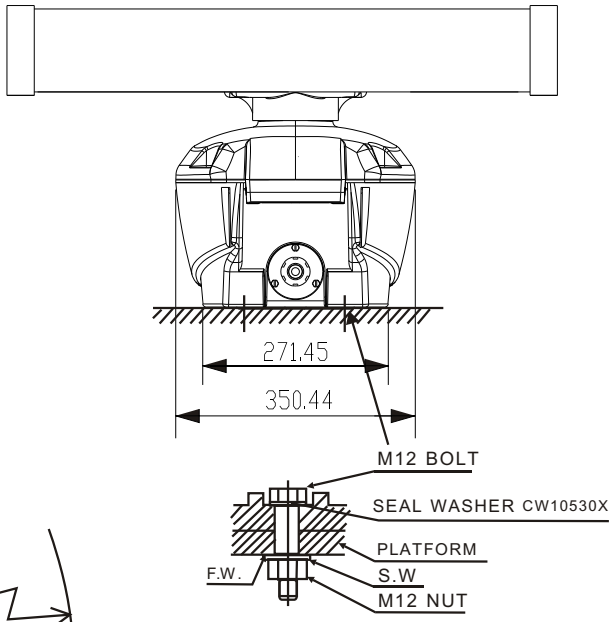

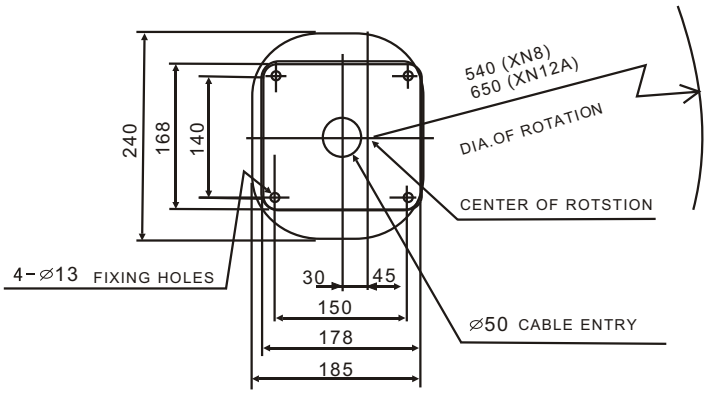

MOUNTING DIMEENSIONS

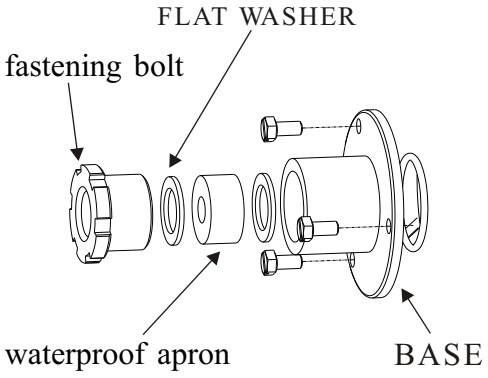

KR-1268 KR-1568	MODE: KRA-2004
	NAME: SCANNER UNIT

10. ABBREVIATIONS

Word	Abbreviations	Word	Abbreviations
Acknowledge	ACK	Maximum	MAX
Acquire, Acquisition	ACQ	Medium Pulse	MP
Adjust, Adjustment	ADJ	Menu	MENU
Alarm	ALARM	Minimum	MIN
Anchor Watch	ANCH	Minute(s)	Min
Antenna	ANT	Nautical Mile(s)	NM
Anti Clutter Rain	RAIN	Navigation	NAV
Anti Clutter sea	SEA	Normal	NORM
Automatic	AUTO	Normal	NORMAL
Automatic Identification System	AIS	North	N
Bearing	BRG	North	NORTH
Bow Crossing Range	BCR	North Up	N UP
Bow Crossing Time	BCT	Off	OFF
Brilliance	BRILL	Offset	OFFSET
Clear	CLR	On	ON
Closest Point of Approach	CPA	Out/Output	OUT
Consistent Common Reference Point	CCRP	Own Ship	OS
Contrast	CONT	Panel Illumination	PANEL
Course	CRS	Parallel Index Line	PI
Course Up	CUP	Past Positions	PAST POSN
Course Over the Ground	COG	Performance Monitor	PM
Course Through the Water	CTW	Port/Portside	PORT
Cursor	CURS	Position	POSN
Delete	DEL	Power	PWR
Depth	DEPTH	Rain	RAIN
Depth	DPTH	Range Rings	RR
Differential GPS	DGPS	Rate Of Turn	ROT
Drift	DRIFT	Reference	REF
East	E	Relative	REL
Echo Reference	REF	Map(s)	MAP
Electronic Bearing Line	EBL	Maritime Mobile Services Identity number	MMSI
Enter	ENT	Relative Motion	RM
Enter	ENTER	Revolutions Per Minute	RPM

Word	Abbreviations	Word	Abbreviations
Error	ERR	Route	ROUTE
Error	ERROR	S-Band	S-BAND
Estimated Time of Arrival	ETA	Search And Rescue Transponder	SART
Fathom(s)	Fm	Second(s)	SEC
Feet/Foot	ft	Select	SEL
Full	FUL	Short Pulse	SP
Full	FULL	Speed	SPD
Gain	GAIN	Speed Over the Ground	SOG
Global Positioning System	GPS	Speed Through the Water	STW
Ground	GND	Stabilized	STAB
Guard Zone	GUARD	Standby	STBY
Gyro	GYRO	Starboard/Starboard Side	STBD
Head Up	H UP	Symbol(s)	SYM
Head Up	HEAD UP	Symbol(s)	SYMBOL
Heading	HDG	Target	TGT
Heading Line	HL	Target Tracking	TT
Indication	IND	Test	TEST
Interference Rejection	IR	Time	TIME
Interval	INT	Time to CPA	TCPA
Interval	INTERVAL	Time To Go	TTG
Kilometre	Km	Track	TRK
Knot(s)	Kn	Tracking	TRKG
Latitude	LAT	Trail(s)	TRAIL
Latitude/Longitude	L/L	Transmit	TX
Log	LOG	Trigger Pulse	TRIGGER
Long Pulse	LP	Tune	TUNE
Longitude	LON	True	T
Lost Target	LOST TGT	True Motion	TM
Magenta	MAG	Variable Range Marker	VRM
Man Overboard	MOB	Vector	VECT
Manual	MAN	Voyage Data Recorder	VDR
Manual	MANUAL	Warning	WARNING
Marker	MKR	Waypoint	WPT
Marker	MARK	X-Band	X-BAND
Master	MASTER		