FCC SAR Test Report

Equipment	:	**Canary Flex Home Security Device**
Brand Name	:	**Canary**
Model No.	:	**CAN600**
FCC ID	:	**2ACDL-C600**
Standard	:	**FCC 47 CFR Part 2 (2.1093)** **ANSI/IEEE C95.1-1992** **IEEE 1528-2013**
Applicant	:	**Canary Connect, Inc.** **606 West 28th Street, 7th Floor** **New York NY 10001, USA**

The product sample received on Aug. 18, 2016 and completely tested on Sep. 02 ~ Nov. 16, 2016. We, SPORTON INTERNATIONAL INC., would like to declare that the tested sample has been evaluated in accordance with the procedures and shown the compliance with the applicable technical standards.

The test results in this report apply exclusively to the tested model / sample. Without written approval of SPORTON INTERNATIONAL INC., the test report shall not be reproduced except in full.

Reviewed by:

Gary Chang / Manager

Testing Laboratory
1190

Table of Contents

1 STATEMENT OF COMPLIANCE 5

1.1 Guidance Standard 5
1.2 Testing Location Information 5

2 EQUIPMENT UNDER TEST (EUT) 6

2.1 General Information 6

3 RF EXPOSURE LIMITS 7

3.1 Uncontrolled Environment 7
3.2 Controlled Environment 7

4 SPECIFIC ABSORPTION RATE (SAR) 8

4.1 Introduction 8
4.2 SAR Definition 8

5 SYSTEM DESCRIPTION AND SETUP 9

6 MEASUREMENT PROCEDURES 10

6.1 Spatial Peak SAR Evaluation 10
6.2 Power Reference Measurement 11
6.3 Area Scan 11
6.4 Zoom Scan 12
6.5 Volume Scan Procedures 12
6.6 Power Drift Monitoring 12

7 TEST EQUIPMENT LIST 13

8 SYSTEM VERIFICATION 14

8.1 Tissue Verification 14
8.2 System Performance Check Results 15

9 RF EXPOSURE POSITIONS 16

9.1 SAR Testing Position 16

10 ANTENNA LOCATION AND SEPARATION DISTANCE 17

11 CONDUCTED RF OUTPUT POWER (UNIT: DBM) 19

12 SAR TEST RESULTS 22

12.1 Body SAR 23

13 UNCERTAINTY ASSESSMENT 26

14 REFERENCES 29

APPENDIX A. PLOTS OF SYSTEM PERFORMANCE CHECK

APPENDIX B. PLOTS OF SAR MEASUREMENT

APPENDIX C. DASY CALIBRATION CERTIFICATE

APPENDIX D. TEST SETUP PHOTOS

Revision History

Report No.	Version	Description	Issued Date
FA681924	Rev. 01	Initial issue of report	Oct. 12, 2016
FA681924	Rev. 02	Added new test results	Nov. 18, 2016

1 Statement of Compliance

The maximum results of Specific Absorption Rate (SAR) found during testing as follows.

Exposure Position	Frequency Band	Reported 1g SAR (W/kg)	Equipment Class	Highest Reported 1g SAR (W/kg)
Body	WLAN5.2GHz Band	1.51	NII	1.51
	WLAN5.8GHz Band	1.51		
	WLAN2.4GHz Band	1.47	DTS	1.47
	Bluetooth	0.00549	DSS	0.00549

This device is in compliance with Specific Absorption Rate (SAR) for general population/uncontrolled exposure limits (1.6 W/kg) specified in FCC 47 CFR part 2 (2.1093) and ANSI/IEEE C95.1-1992, and had been tested in accordance with the measurement methods and procedures specified in IEEE 1528-2013.

1.1 Guidance Standard

The Specific Absorption Rate (SAR) testing specification, method, and procedure for this device is in accordance with the following standards:

- FCC 47 CFR Part 2 (2.1093)
- ANSI/IEEE C95.1-1992
- IEEE 1528-2013
- FCC KDB 865664 D01 SAR Measurement 100 MHz to 6 GHz v01r04
- FCC KDB 865664 D02 RF Exposure Reporting v01r02
- FCC KDB 447498 D01 General RF Exposure Guidance v06
- FCC KDB 248227 D01 802.11 Wi-Fi SAR v02r02

1.2 Testing Location Information

Testing Location		
Wen	ADD	: No. 13-1, Ln. 19, Wen 33rd St., Kwei-Shan District, Tao Yuan City, Taiwan, R.O.C.
	TEL	: 886-3-3180792

2 Equipment Under Test (EUT)

2.1 General Information

Product Feature & Specification	
Equipment Name	Canary Flex Home Security Device
Brand Name	Canary
Model Name	CAN600
FCC ID	2ACDL-C600
Frequency Range	WLAN 2.4GHz: 2412MHz ~ 2462MHz WLAN 5.2GHz: 5180 MHz ~ 5240 MHz WLAN 5.8GHz: 5745 MHz ~ 5825 MHz Bluetooth: 2402MHz ~ 2480 MHz
EUT Stage	Identical Prototype

Specification of Accessory		
Adapter 1	Brand Name	canary
	Model Name	CAN100USAPT
	Power Rating	I/P: 100-240Vac, 50/60HZ, 0.3A O/P: 5Vdc, 2000mA
	Manufacturer	Vanze
Adapter 2	Brand Name	canary
	Model Name	CAN100USAPT
	Power Rating	I/P: 100-240Vac, 50/60HZ, 0.35A O/P: 5Vdc, 2000mA
	Manufacturer	T&W
Battery	Brand Name	Sunwoda
	Model Name	SUN-INTE-16
	Power Rating	3350mAh
USB Cable (black)	Line	2.41m, shielded, w/o core.
USB Cable (white)	Line	2.41m, shielded, w/o core.

3 RF Exposure Limits

3.1 Uncontrolled Environment

Uncontrolled Environments are defined as locations where there is the exposure of individuals who have no knowledge or control of their exposure. The general population/uncontrolled exposure limits are applicable to situations in which the general public may be exposed or in which persons who are exposed as a consequence of their employment may not be made fully aware of the potential for exposure or cannot exercise control over their exposure. Members of the general public would come under this category when exposure is not employment-related; for example, in the case of a wireless transmitter that exposes persons in its vicinity.

3.2 Controlled Environment

Controlled Environments are defined as locations where there is exposure that may be incurred by persons who are aware of the potential for exposure, (i.e. as a result of employment or occupation). In general, occupational/controlled exposure limits are applicable to situations in which persons are exposed as a consequence of their employment, who have been made fully aware of the potential for exposure and can exercise control over their exposure. The exposure category is also applicable when the exposure is of a transient nature due to incidental passage through a location where the exposure levels may be higher than the general population/uncontrolled limits, but the exposed person is fully aware of the potential for exposure and can exercise control over his or her exposure by leaving the area or by some other appropriate means.

Limits for Occupational/Controlled Exposure (W/kg)

Whole-Body	Partial-Body	Hands, Wrists, Feet and Ankles
0.4	8.0	20.0

Limits for General Population/Uncontrolled Exposure (W/kg)

Whole-Body	Partial-Body	Hands, Wrists, Feet and Ankles
0.08	1.6	4.0

1. Whole-Body SAR is averaged over the entire body, partial-body SAR is averaged over any 1gram of tissue defined as a tissue volume in the shape of a cube. SAR for hands, wrists, feet and ankles is averaged over any 10 grams of tissue defined as a tissue volume in the shape of a cube.

4 Specific Absorption Rate (SAR)

4.1 Introduction

SAR is related to the rate at which energy is absorbed per unit mass in an object exposed to a radio field. The SAR distribution in a biological body is complicated and is usually carried out by experimental techniques or numerical modeling. The standard recommends limits for two tiers of groups, occupational/controlled and general population/uncontrolled, based on a person's awareness and ability to exercise control over his or her exposure. In general, occupational/controlled exposure limits are higher than the limits for general population/uncontrolled.

4.2 SAR Definition

The SAR definition is the time derivative (rate) of the incremental energy (dW) absorbed by (dissipated in) an incremental mass (dm) contained in a volume element (dv) of a given density (ρ). The equation description is as below:

$$\mathbf{SAR} = \frac{\mathbf{d}}{\mathbf{dt}}\left(\frac{\mathbf{dW}}{\mathbf{dm}}\right) = \frac{\mathbf{d}}{\mathbf{dt}}\left(\frac{\mathbf{dW}}{\boldsymbol{\rho}\mathbf{dv}}\right)$$

SAR is expressed in units of Watts per kilogram (W/kg)

$$\mathbf{SAR} = \frac{\boldsymbol{\sigma}|\mathbf{E}|^2}{\boldsymbol{\rho}}$$

Where: σ is the conductivity of the tissue, ρ is the mass density of the tissue and E is the RMS electrical field strength.

5 System Description and Setup

The DASY system used for performing compliance tests consists of the following items:

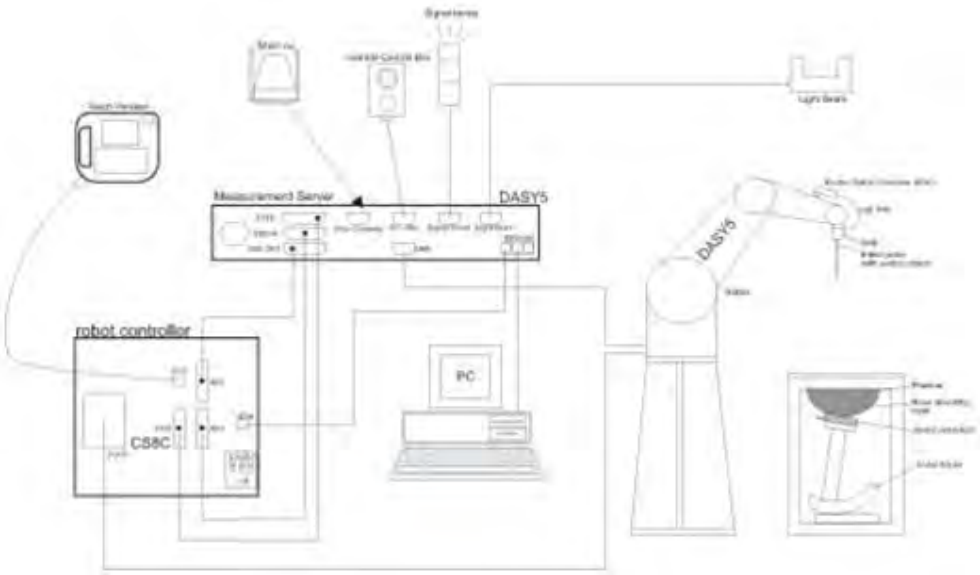

- A standard high precision 6-axis robot with controller, teach pendant and software. An arm extension for accommodating the data acquisition electronics (DAE).
- An isotropic Field probe optimized and calibrated for the targeted measurement.
- A data acquisition electronics (DAE) which performs the signal amplification, signal multiplexing, AD-conversion, offset measurements, mechanical surface detection, collision detection, etc. The unit is battery powered with standard or rechargeable batteries. The signal is optically transmitted to the EOC.
- The Electro-optical converter (EOC) performs the conversion from optical to electrical signals for the digital communication to the DAE. To use optical surface detection, a special version of the EOC is required. The EOC signal is transmitted to the measurement server.
- The function of the measurement server is to perform the time critical tasks such as signal filtering, control of the robot operation and fast movement interrupts.
- The Light Beam used is for probe alignment. This improves the (absolute) accuracy of the probe positioning.
- A computer running WinXP or Win7 and the DASY5 software.
- Remote control and teach pendant as well as additional circuitry for robot safety such as warning lamps, etc.
- The phantom, the device holder and other accessories according to the targeted measurement.

6 Measurement Procedures

The measurement procedures are as follows:

<Conducted power measurement>

(a) For WWAN power measurement, use base station simulator to configure EUT WWAN transmission in conducted connection with RF cable, at maximum power in each supported wireless interface and frequency band.
(b) Read the WWAN RF power level from the base station simulator.
(c) For WLAN/BT power measurement, use engineering software to configure EUT WLAN/BT continuously transmission, at maximum RF power in each supported wireless interface and frequency band
(d) Connect EUT RF port through RF cable to the power meter, and measure WLAN/BT output power

<SAR measurement>

(a) Use base station simulator to configure EUT WWAN transmission in radiated connection, and engineering software to configure EUT WLAN/BT continuously transmission, at maximum RF power, in the highest power channel.
(b) Place the EUT in the positions as Appendix D demonstrates.
(c) Set scan area, grid size and other setting on the DASY software.
(d) Measure SAR results for the highest power channel on each testing position.
(e) Find out the largest SAR result on these testing positions of each band
(f) Measure SAR results for other channels in worst SAR testing position if the reported SAR of highest power channel is larger than 0.8 W/kg

According to the test standard, the recommended procedure for assessing the peak spatial-average SAR value consists of the following steps:

(a) Power reference measurement
(b) Area scan
(c) Zoom scan
(d) Power drift measurement

6.1 Spatial Peak SAR Evaluation

The procedure for spatial peak SAR evaluation has been implemented according to the test standard. It can be conducted for 1g and 10g, as well as for user-specific masses. The DASY software includes all numerical procedures necessary to evaluate the spatial peak SAR value.

The base for the evaluation is a "cube" measurement. The measured volume must include the 1g and 10g cubes with the highest averaged SAR values. For that purpose, the center of the measured volume is aligned to the interpolated peak SAR value of a previously performed area scan.

The entire evaluation of the spatial peak values is performed within the post-processing engine (SEMCAD). The system always gives the maximum values for the 1g and 10g cubes. The algorithm to find the cube with highest averaged SAR is divided into the following stages:

(a) Extraction of the measured data (grid and values) from the Zoom Scan
(g) Calculation of the SAR value at every measurement point based on all stored data (A/D values and measurement parameters)
(b) Generation of a high-resolution mesh within the measured volume
(c) Interpolation of all measured values form the measurement grid to the high-resolution grid
(d) Extrapolation of the entire 3-D field distribution to the phantom surface over the distance from sensor to surface
(e) Calculation of the averaged SAR within masses of 1g and 10g

6.2 Power Reference Measurement

The Power Reference Measurement and Power Drift Measurements are for monitoring the power drift of the device under test in the batch process. The minimum distance of probe sensors to surface determines the closest measurement point to phantom surface. This distance cannot be smaller than the distance of sensor calibration points to probe tip as defined in the probe properties.

6.3 Area Scan

The area scan is used as a fast scan in two dimensions to find the area of high field values, before doing a fine measurement around the hot spot. The sophisticated interpolation routines implemented in DASY software can find the maximum found in the scanned area, within a range of the global maximum. The range (in dB0 is specified in the standards for compliance testing. For example, a 2 dB range is required in IEEE standard 1528 and IEC 62209 standards, whereby 3 dB is a requirement when compliance is assessed in accordance with the ARIB standard (Japan), if only one zoom scan follows the area scan, then only the absolute maximum will be taken as reference. For cases where multiple maximums are detected, the number of zoom scans has to be increased accordingly.

Area scan parameters extracted from FCC KDB 865664 D01v01r03 SAR measurement 100 MHz to 6 GHz v01r01.

	≤ 3 GHz	> 3 GHz
Maximum distance from closest measurement point (geometric center of probe sensors) to phantom surface	5 ± 1 mm	½·δ·ln(2) ± 0.5 mm
Maximum probe angle from probe axis to phantom surface normal at the measurement location	30° ± 1°	20° ± 1°
Maximum area scan spatial resolution: Δx_{Area}, Δy_{Area}	≤ 2 GHz: ≤ 15 mm 2 – 3 GHz: ≤ 12 mm	3 – 4 GHz: ≤ 12 mm 4 – 6 GHz: ≤ 10 mm
	When the x or y dimension of the test device, in the measurement plane orientation, is smaller than the above, the measurement resolution must be ≤ the corresponding x or y dimension of the test device with at least one measurement point on the test device.	

6.4 Zoom Scan

Zoom scans are used assess the peak spatial SAR values within a cubic averaging volume containing 1 gram and 10 gram of simulated tissue. The zoom scan measures points (refer to table below) within a cube shoes base faces are centered on the maxima found in a preceding area scan job within the same procedure. When the measurement is done, the zoom scan evaluates the averaged SAR for 1 gram and 10 gram and displays these values next to the job's label.

Zoom scan parameters extracted from FCC KDB 865664 D01v01r03 SAR measurement 100 MHz to 6 GHz v01r01.

			≤ 3 GHz	> 3 GHz
Maximum zoom scan spatial resolution: Δx_{Zoom}, Δy_{Zoom}			≤ 2 GHz: ≤ 8 mm 2 – 3 GHz: ≤ 5 mm*	3 – 4 GHz: ≤ 5 mm* 4 – 6 GHz: ≤ 4 mm*
Maximum zoom scan spatial resolution, normal to phantom surface	uniform grid: $\Delta z_{Zoom}(n)$		≤ 5 mm	3 – 4 GHz: ≤ 4 mm 4 – 5 GHz: ≤ 3 mm 5 – 6 GHz: ≤ 2 mm
	graded grid	$\Delta z_{Zoom}(1)$: between 1st two points closest to phantom surface	≤ 4 mm	3 – 4 GHz: ≤ 3 mm 4 – 5 GHz: ≤ 2.5 mm 5 – 6 GHz: ≤ 2 mm
		$\Delta z_{Zoom}(n>1)$: between subsequent points	$\leq 1.5 \cdot \Delta z_{Zoom}(n-1)$	
Minimum zoom scan volume	x, y, z		≥ 30 mm	3 – 4 GHz: ≥ 28 mm 4 – 5 GHz: ≥ 25 mm 5 – 6 GHz: ≥ 22 mm

Note: δ is the penetration depth of a plane-wave at normal incidence to the tissue medium; see draft standard IEEE P1528-2011 for details.

* When zoom scan is required and the *reported* SAR from the *area scan based 1-g SAR estimation* procedures of KDB 447498 is ≤ 1.4 W/kg, ≤ 8 mm, ≤ 7 mm and ≤ 5 mm zoom scan resolution may be applied, respectively, for 2 GHz to 3 GHz, 3 GHz to 4 GHz and 4 GHz to 6 GHz.

6.5 Volume Scan Procedures

The volume scan is used for assess overlapping SAR distributions for antennas transmitting in different frequency bands. It is equivalent to an oversized zoom scan used in standalone measurements. The measurement volume will be used to enclose all the simultaneous transmitting antennas. For antennas transmitting simultaneously in different frequency bands, the volume scan is measured separately in each frequency band. In order to sum correctly to compute the 1g aggregate SAR, the EUT remain in the same test position for all measurements and all volume scan use the same spatial resolution and grid spacing. When all volume scan were completed, the software, SEMCAD postprocessor can combine and subsequently superpose these measurement data to calculating the multiband SAR.

6.6 Power Drift Monitoring

All SAR testing is under the EUT install full charged battery and transmit maximum output power. In DASY measurement software, the power reference measurement and power drift measurement procedures are used for monitoring the power drift of EUT during SAR test. Both these procedures measure the field at a specified reference position before and after the SAR testing. The software will calculate the field difference in dB. If the power drifts more than 5%, the SAR will be retested.

7 Test Equipment List

Manufacturer	Name of Equipment	Type/Model	Serial Number	Calibration	
				Last Cal.	Due Date
SPEAG	Data Acquisition Electronics	DAE4	1424	2016/2/16	2017/2/15
SPEAG	Dosimetric E-Field Probe	EX3DV4	3976	2016/2/22	2017/2/21
SPEAG	2450MHz System Validation Kit	D2450V2	929	2016/2/9	2017/2/8
SPEAG	5000MHz System Validation Kit	D5GHzV2	1171	2016/2/17	2017/2/16
SPEAG	Device Holder	N/A	N/A	NCR	NCR
Mini-Circuits	Power Amplifier	ZHL-42W+	15542	NCR	NCR
Mini-Circuits	Power Amplifier	ZVE-8G+	605601404	NCR	NCR
Agilent	ENA Series Network Analyzer	E5071C	MY46419201	2016/1/21	2017/1/20
Agilent	EXA Signal Analyzer	N9010A	MY54200432	2016/8/22	2017/8/21
Keysight	MXG-B RF Vector Signal Generator	N5182B	MY53050081	2016/4/1	2017/3/31
SPEAG	Dielectric Probe Kit	SM DAK 040CA	1146	NCR	NCR
Anritsu	Power Meter	ML2495A	1124009	2016/2/22	2017/2/21
Anritsu	Power sensor	MA2411B	1027452	2016/2/22	2017/2/21
Anritsu	Power Meter	ML2495A	0949003	2016/2/4	2017/2/3
Anritsu	Power sensor	MA2411B	0917017	2016/2/4	2017/2/3
SPEAG	SAM Phantom	QD 000 P40 CD	1815	NCR	NCR
SPEAG	Flat Phantom ELI5.0	QD OVA 002 AA	1238	NCR	NCR
Wisewind	Themometer	HTC1	HTC1	2015/12/24	2016/12/23
Wisewind	Themometer	YF-160A	130504609	2015/12/24	2016/12/23

General Note:

1. The calibration certificate of DASY can be referred to appendix C of this report.
2. The Insertion Loss calibration of Dual Directional Coupler and Attenuator were characterized via the network analyzer and compensated during system check.
3. In system check we need to monitor the level on the power meter, and adjust the power amplifier level to have precise power level to the dipole; the measured SAR will be normalized to 1W input power according to the ratio of 1W to the input power to the dipole. For system check, the calibration of the power amplifier is deemed not critically required for correct measurement; the power meter is critical and we do have calibration for it
4. Attenuator 1 insertion loss is calibrated by the network Analyzer, which the calibration is valid, before system check.
5. NCR: No calibration request.

8 System Verification

8.1 Tissue Verification

The following tissue formulations are provided for reference only as some of the parameters have not been thoroughly verified. The composition of ingredients may be modified accordingly to achieve the desired target tissue parameters required for routine SAR evaluation.

Simulating Liquid for 5GHz, Manufactured by SPEAG

Ingredients	(% by weight)
Water	64~78%
Mineral oil	11~18%
Emulsifiers	9~15%
Additives and Salt	2~3%

<Tissue Dielectric Parameter Check Results>

Frequency (MHz)	Liquid Temp. (℃)	Conductivity (σ)	Permittivity (εr)	Conductivity Target (σ)	Permittivity Target (εr)	Delta (σ) (%)	Delta (εr) (%)	Limit (%)	Date
2450	22.5	1.932	52.419	1.95	52.7	-0.92	-0.53	±5	2016/9/2
2450	22.5	1.923	52.369	1.95	52.7	-1.38	-0.63	±5	2016/9/5
2450	22.5	1.934	52.226	1.95	52.7	-0.82	-0.90	±5	2016/11/16
5200	22.5	5.097	49.229	5.3	49	-3.83	0.47	±5	2016/9/19
5200	22.5	5.186	48.039	5.3	49	-2.15	-1.96	±5	2016/11/15
5800	22.5	5.957	47.101	6	48.2	-0.72	-2.28	±5	2016/9/19
5800	22.5	5.957	47.101	6	48.2	-0.72	-2.28	±5	2016/11/16

8.2 System Performance Check Results

Comparing to the original SAR value provided by SPEAG, the verification data should be within its specification of 10 %. Below table shows the target SAR and measured SAR after normalized to 1W input power. The table below indicates the system performance check can meet the variation criterion and the plots can be referred to Appendix A of this report.

Date	Frequency (MHz)	Tissue Type	Input Power (mW)	Dipole S/N	Probe S/N	DAE S/N	Measured SAR (W/kg)	Targeted SAR (W/kg)	Normalized SAR (W/kg)	Deviation (%)
2016/9/2	2450	Body	250	929	3976	1424	12.7	49.8	50.80	2.008
2016/9/5	2450	Body	250	929	3976	1424	12.9	49.8	51.60	3.614
2016/11/16	2450	Body	250	929	3976	1424	12.7	49.8	50.80	2.008
2016/9/19	5200	Body	100	1171	3976	1424	7.35	73.6	73.50	-0.136
2016/11/15	5200	Body	100	1171	3976	1424	7.09	73.6	70.90	-3.668
2016/9/19	5800	Body	100	1171	3976	1424	7.19	75.6	71.90	-4.894
2016/11/16	5800	Body	100	1171	3976	1424	7.19	75.6	71.90	-4.894

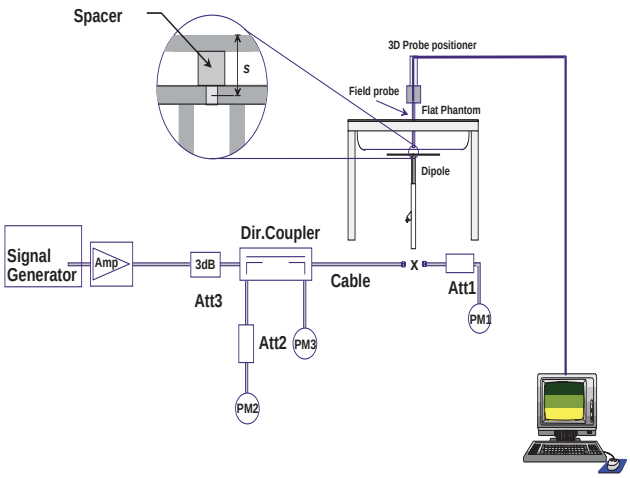

System Performance Check Setup

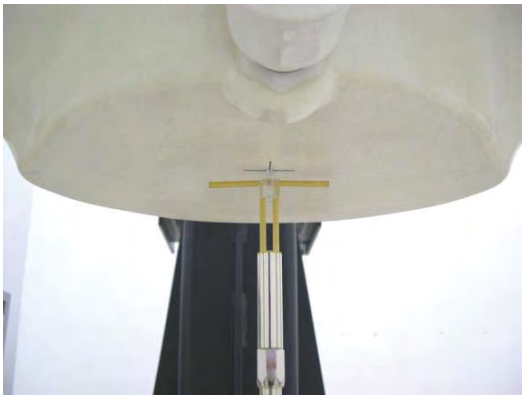

Setup Photo

9 RF Exposure Positions

9.1 SAR Testing Position

Please refer to Appendix D. for the test setup photos.

10 Antenna Location and Separation Distance

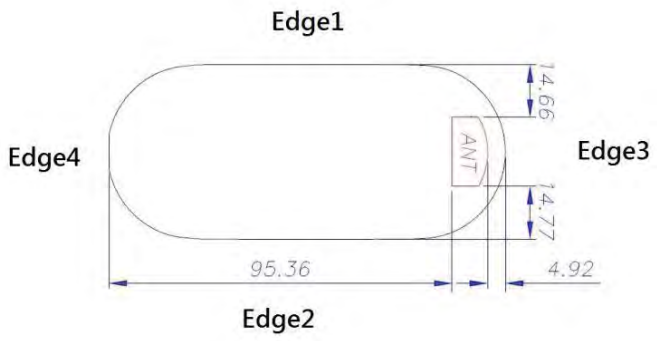

General Note:

1. The below table, when the distance is < 50 mm exclusion threshold is "Ratio", when the distance is > 50 mm exclusion threshold is "mW"
2. Maximum power is the source-based time-average power and represents the maximum RF output power among production units
3. Per KDB 447498 D01v06, for larger devices, the test separation distance of adjacent edge configuration is determined by the closest separation between the antenna and the user.
4. Per KDB 447498 D01v06, standalone SAR test exclusion threshold is applied; If the test separation distance is < 5mm, 5mm is used to determine SAR exclusion threshold.
5. Per KDB 447498 D01v06, the 1-g and 10-g SAR test exclusion thresholds for 100 MHz to 6 GHz at test separation distances ≤ 50 mm are determined by:

   [(max. power of channel, including tune-up tolerance, mW)/(min. test separation distance, mm)] ·[$\sqrt{f(GHz)}$] ≤ 3.0 for 1-g SAR and ≤ 7.5 for 10-g extremity SAR

   f(GHz) is the RF channel transmit frequency in GHz

   Power and distance are rounded to the nearest mW and mm before calculation

   The result is rounded to one decimal place for comparison
6. Per KDB 447498 D01v06, at 100 MHz to 6 GHz and for test separation distances > 50 mm, the SAR test exclusion threshold is determined according to the following

   a) [Threshold at 50 mm in step 1) + (test separation distance - 50 mm)·(f(MHz)/150)] mW, at 100 MHz to 1500 MHz

   b) [Threshold at 50 mm in step 1) + (test separation distance - 50 mm)·10] mW at > 1500 MHz and ≤ 6 GHz

   7. For the bottom-face that proximity sensor power reduction is applied for SAR compliance, additional SAR testing at “sensor trigger distance – 1mm” with EUT transmitting full power in normal mode was performed.

Frequency Band(MHz)		2400~2483.5MHz		5150~5250MHz		5725~5850MHz	
Calculated Freq.(MHz)		2437		5230		5795	
Tune-up power(dBm)		20.00		13		10.5	
Tune-up power(mW)		100		19.95		11.22	
Position	Separation Distance(mm)	Exclusion Thresholds	Test or not	Exclusion Thresholds	Test or not	Exclusion Thresholds	Test or not
Rear	5	10	YES	7	YES	6	YES
Front	5	10	YES	7	YES	6	YES
Edge1	14.66	28	YES	19	YES	18	No
Edge2	14.77	28	YES	19	YES	18	No
Edge3	4.92	9	YES	6	YES	6	YES
Edge4	95.36	549.6	No	519.6	No	515.6	No

11 Conducted RF Output Power (Unit: dBm)

General Note:

1. SAR test reduction is determined according to 802.11 transmission mode configurations and certain exposure conditions with multiple test positions. In the 2.4 GHz band, separate SAR procedures are applied to DSSS and OFDM configurations to simplify DSSS test requirements. For OFDM, in both
   2.4 and 5 GHz bands, an initial test configuration must be determined for each standalone and aggregated frequency band, according to the transmission mode configuration with the highest maximum output power specified for production units to perform SAR measurements. If the same highest maximum output power applies to different combinations of channel bandwidths, modulations and data rates, additional procedures are applied to determine which test configurations require SAR measurement
2. For OFDM transmission configurations in the 2.4 GHz and 5 GHz bands, When the same maximum power is specified for multiple transmission modes in a frequency band, the largest channel bandwidth, lowest order modulation, lowest data rate and lowest order 802.11a/g/n/ac mode is used for SAR measurement, on the highest measured output power channel for each frequency band.
3. DSSS and OFDM configurations are considered separately according to the required SAR procedures. SAR is measured in the initial test position using the 802.11 transmission mode configuration required by the DSSS procedure or initial test configuration and subsequent test configuration(s) according to the OFDM procedures.18 The initial test position procedure is described in the following:
   a. When the reported SAR of the initial test position is ≤ 0.4 W/kg, further SAR measurement is not required for the other test positions in that exposure configuration and 802.11 transmission mode combinations within the frequency band or aggregated band.
   b. When the reported SAR of the test position is > 0.4 W/kg, SAR is repeated for the 802.11 transmission mode configuration tested in the initial test position to measure the subsequent next closet/smallest test separation distance and maximum coupling test position on the highest maximum output power channel, until the report SAR is ≤ 0.8 W/kg or all required test position are tested
   c. For all positions/configurations, when the reported SAR is > 0.8 W/kg, SAR is measured for these test positions/configurations on the subsequent next highest measured output power channel(s) until the reported SAR is ≤ 1.2 W/kg or all required channels are tested.
4. Duty cycle of test signal is as below table

Mode	Data rate	Duty cycle (%)	Duty factor
11b	1 Mbps	100	1
11g	6 Mbps	100	1
11n HT20	MCS0	100	1
11a	6 Mbps	99.65	1.004
11 n HT20	MCS0	99.63	1.004
11 n HT40	MCS0	98.37	1.017
Bluetooth	1 Mbps	100	1

<2.4GHz WLAN>

WLAN 2.4GHz 802.11b Average Power (dBm)			Tune up Limit (dBm)
Power vs. Channel			
Channel	Frequency (MHz)	Data Rate (1Mbps)	
CH 1	2412	17.92	18.00
CH 6	2437	19.88	20.00
CH 11	2462	19.12	19.50

WLAN 2.4GHz 802.11g Average Power (dBm)			Tune up Limit (dBm)
Power vs. Channel			
Channel	Frequency (MHz)	Data Rate (6Mbps)	
CH 1	2412	14.77	15.00
CH 6	2437	18.92	19.00
CH 11	2462	15.18	15.50

WLAN 2.4GHz 802.11n-HT20 Average Power (dBm)			Tune up Limit (dBm)
Power vs. Channel			
Channel	Frequency (MHz)	Data Rate (MCS0)	
CH 1	2412	14.68	15.00
CH 6	2437	19.01	19.50
CH 11	2462	15.19	15.50

<5.2GHz WLAN>

WLAN 5.2GHz 802.11a Average Power (dBm)			Tune up Limit (dBm)
Power vs. Channel			
Channel	Frequency (MHz)	Data Rate (6Mbps)	
CH 36	5180	12.68	13.00
CH 40	5200	12.69	13.00
CH 44	5220	12.64	13.00
CH 48	5240	12.62	13.00

WLAN 5.2GHz 802.11n-HT20 Average Power (dBm)			Tune up Limit (dBm)
Power vs. Channel			
Channel	Frequency (MHz)	Data Rate (MCS0)	
CH 36	5180	12.53	13.00
CH 40	5200	12.44	12.50
CH 44	5220	12.42	12.50
CH 48	5240	12.58	13.00

WLAN 5.2GHz 802.11n-HT40 Average Power (dBm)			Tune up Limit (dBm)
Power vs. Channel			
Channel	Frequency (MHz)	Data Rate (MCS0)	
CH 38	5190	12.81	13.00
CH 46	5230	12.86	13.00

<5.8GHz WLAN>

WLAN 5.8GHz 802.11a Average Power (dBm) Power vs. Channel			Tune up Limit (dBm)
Channel	Frequency (MHz)	Data Rate (6Mbps)	
CH 149	5745	10.16	10.50
CH 153	5765	10.12	10.50
CH 157	5785	10.05	10.50
CH 161	5805	10.03	10.50
CH 165	5825	10.01	10.50

WLAN 5.8GHz 802.11n-HT20 Average Power (dBm) Power vs. Channel			Tune up Limit (dBm)
Channel	Frequency (MHz)	Data Rate (MCS0)	
CH 149	5745	10.12	10.50
CH 153	5765	10.09	10.50
CH 157	5785	10.06	10.50
CH 161	5805	10.03	10.50
CH 165	5825	10.02	10.50

WLAN 5.8GHz 802.11n-HT40 Average Power (dBm) Power vs. Channel			Tune up Limit (dBm)
Channel	Frequency (MHz)	Data Rate (MCS0)	
CH 151	5755	10.12	10.50
CH 159	5795	10.25	10.50

<Bluetooth>

Bluetooth Average Power (dBm) Power vs. Channel				Tune up Limit (dBm)
Mode	Channel	Frequency (MHz)	Average power (dBm)	
EDR-GFSK	0	2402	7.55	8.5
EDR-GFSK	39	2441	8.22	8.5
EDR-GFSK	78	2480	8.12	8.5
EDR-π/4 DQPSK	0	2402	4.29	4.5
EDR-π/4 DQPSK	39	2441	4.42	4.5
EDR-π/4 DQPSK	78	2480	3.67	4.5
EDR-8DPSK	0	2402	4.29	4.5
EDR-8DPSK	39	2441	4.42	4.5
EDR-8DPSK	78	2480	3.66	4.5
LE-GFSK	37	2402	7.17	7.5
LE-GFSK	17	2440	6.72	7.5
LE-GFSK	39	2480	6.70	7.5

12 SAR Test Results

General Note:

1. Per KDB 447498 D01v06, the reported SAR is the measured SAR value adjusted for maximum tune-up tolerance.
   a. Tune-up scaling Factor = tune-up limit power (mW) / EUT RF power (mW), where tune-up limit is the maximum rated power among all production units.
   b. For SAR testing of WLAN signal with non-100% duty cycle, the measured SAR is scaled-up by the duty cycle scaling factor which is equal to "1/(duty cycle)"
   c. For WLAN: Reported SAR(W/kg)= Measured SAR(W/kg)*Tune-up Scaling Factor
2. Per KDB 248227 D01v02r02, for U-NII-1 Head and Body-worn SAR testing is not required when the U-NII-2A band highest reported SAR for a test configuration is ≤ 1.2 W/kg, SAR is not required for U-NII-1 band.
3. When the reported SAR of the test position is > 0.4 W/kg, SAR is repeated for the 802.11 transmission mode configuration tested in the initial test position to measure the subsequent next closet/smallest test separation distance and maximum coupling test position on the highest maximum output power channel, until the report SAR is ≤ 0.8 W/kg or all required test position are tested.
4. For all positions / configurations, when the reported SAR is > 0.8 W/kg, SAR is measured for these test positions / configurations on the subsequent next highest measured output power channel(s) until the reported SAR is ≤ 1.2 W/kg or all required channels are tested.

12.1 Body SAR

<Bluetooth>

Plot No.	Mode	Test Position	Gap (cm)	Ch.	Freq. (MHz)	Conducted Power (dBm)	Tune-Up Limit (dBm)	Tune-up Scaling Factor	Duty Scaling Factor	Power Drift (dB)	Measured 1g SAR (W/kg)	Reported 1g SAR (W/kg)
9	Bluetooth	Front Face	0	39	2441	8.22	8.5	1.07	1.000	0.08	0.00513	**0.00549**
10	Bluetooth	Rear Face	0	39	2441	8.22	8.5	1.07	1.000	0.01	0.00217	0.00232
11	Bluetooth	Edge1	0	39	2441	8.22	8.5	1.07	1.000	0.04	0.00505	0.00540
12	Bluetooth	Edge2	0	39	2441	8.22	8.5	1.07	1.000	0.09	0.005	0.00535
13	Bluetooth	Edge3	0	39	2441	8.22	8.5	1.07	1.000	0.02	0.00316	0.00338

<2.4GHz>

Plot No.	Band	Mode	Test Position	Gap (cm)	Ch.	Freq. (MHz)	Conducted Power (dBm)	Tune-Up Limit (dBm)	Tune-up Scaling Factor	Duty Scaling Factor	Power Drift (dB)	Measured 1g SAR (W/kg)	Reported 1g SAR (W/kg)
1	2.4 GHz	802.11b	Front Face	0	6	2437	19.88	20	1.03	1.000	0.01	1.430	**1.47**
2		802.11b	Rear Face	0	6	2437	19.88	20	1.03	1.000	0.02	0.224	0.23
3		802.11b	Edge1	0	6	2437	19.88	20	1.03	1.000	0.00	0.52	0.54
4		802.11b	Edge2	0	6	2437	19.88	20	1.03	1.000	-0.04	0.154	0.16
5		802.11b	Edge3	0	6	2437	19.88	20	1.03	1.000	-0.04	0.746	0.77
6		802.11b	Front Face	0	1	2412	17.92	18	1.02	1.000	0.09	1.190	1.21
7		802.11b	Front Face	0	11	2462	19.12	19.5	1.09	1.000	0.04	1.200	1.31
46		802.11n	Front Face	0	6	2437	19.01	19.5	1.12	1.000	0.07	1.18	1.32
47		802.11n	Front Face	0	11	2462	15.19	15.5	1.07	1.000	0.06	0.462	0.49
48		802.11g	Front Face	0	6	2437	18.92	19	1.02	1.000	0.04	1.23	1.25
49		802.11g	Front Face	0	11	2462	15.18	15.5	1.08	1.000	0.04	0.48	0.52

<5.2GHz>

Plot No.	Band	Mode	Test Position	Gap (cm)	Ch.	Freq. (MHz)	Conducted Power (dBm)	Tune-Up Limit (dBm)	Tune-up Scaling Factor	Duty Scaling Factor	Power Drift (dB)	Measured 1g SAR (W/kg)	Reported 1g SAR (W/kg)
14	5.2 GHz	11n HT40	Front Face	0	46	5230	12.86	13	1.03	1.017	0.09	1.36	1.42
15		11n HT40	Rear Face	0	46	5230	12.86	13	1.03	1.017	-0.05	0.033	0.03
16		11n HT40	Edge1	0	46	5230	12.86	13	1.03	1.017	-0.03	0.119	0.12
17		11n HT40	Edge2	0	46	5230	12.86	13	1.03	1.017	0.07	0.055	0.06
18		11n HT40	Edge3	0	46	5230	12.86	13	1.03	1.017	0.04	0.219	0.23
19		11n HT40	Front Face	0	38	5190	12.81	13	1.04	1.017	0.02	1.43	**1.51**
28		802.11a	Front Face	0	40	5200	12.69	13	1.07	1.004	0.06	1.34	1.44
29		802.11a	Front Face	0	36	5180	12.68	13	1.08	1.004	0.09	1.35	1.46
30		802.11a	Front Face	0	44	5220	12.64	13	1.09	1.004	0.02	1.29	1.41
31		802.11a	Front Face	0	48	5240	12.62	13	1.09	1.004	0.02	1.35	1.48
32		11n HT20	Front Face	0	48	5240	12.58	13	1.10	1.004	0.06	1.31	1.45
33		11n HT20	Front Face	0	36	5180	12.53	13	1.11	1.004	0.09	1.31	1.46
34		11n HT20	Front Face	0	40	5200	12.44	12.5	1.01	1.004	-0.01	1.33	1.35
35		11n HT20	Front Face	0	44	5220	12.42	12.5	1.02	1.004	0.08	1.38	1.41

<5.8GHz>

Plot No.	Band	Mode	Test Position	Gap (cm)	Ch.	Freq. (MHz)	Conducted Power (dBm)	Tune-Up Limit (dBm)	Tune-up Scaling Factor	Duty Scaling Factor	Power Drift (dB)	Measured 1g SAR (W/kg)	Reported 1g SAR (W/kg)
21	5.8 GHz	11n HT40	Front Face	0	159	5795	10.25	10.5	1.06	1.017	-0.03	1.32	1.42
22		11n HT40	Rear Face	0	159	5795	10.25	10.5	1.06	1.017	0.05	0.049	0.05
23		11n HT40	Edge1	0	159	5795	10.25	10.5	1.06	1.017	0.03	0.068	0.07
24		11n HT40	Edge2	0	159	5795	10.25	10.5	1.06	1.017	0.08	0.042	0.05
25		11n HT40	Edge3	0	159	5795	10.25	10.5	1.06	1.017	-0.03	0.321	0.35
26		11n HT40	Front Face	0	151	5755	10.12	10.5	1.09	1.017	0.03	1.36	**1.51**
36		802.11a	Front Face	0	149	5745	10.16	10.5	1.08	1.004	-0.02	1.28	1.39
37		802.11a	Front Face	0	153	5765	10.12	10.5	1.09	1.004	0.03	1.27	1.39
38		802.11a	Front Face	0	157	5785	10.05	10.5	1.11	1.004	-0.04	1.24	1.38
39		802.11a	Front Face	0	161	5805	10.03	10.5	1.11	1.004	-0.02	1.21	1.35
40		802.11a	Front Face	0	165	5825	10.01	10.5	1.12	1.004	-0.03	1.19	1.34
41		11n HT20	Front Face	0	149	5745	10.12	10.5	1.09	1.004	0.02	1.32	1.44
42		11n HT20	Front Face	0	153	5765	10.09	10.5	1.10	1.004	-0.08	1.18	1.30
43		11n HT20	Front Face	0	157	5785	10.06	10.5	1.11	1.004	-0.09	1.17	1.30
44		11n HT20	Front Face	0	161	5805	10.03	10.5	1.11	1.004	-0.09	1.16	1.29
45		11n HT20	Front Face	0	165	5825	10.02	10.5	1.12	1.004	0.08	1.16	1.30

Test Engineer： Lynus

12.2 Repeated SAR measurement

Plot No.	Band	Mode	Test Position	Gap (cm)	Ch.	Freq. (MHz)	Conducted Power (dBm)	Tune-Up Limit (dBm)	Tune-up Scaling Factor	Duty Scaling Factor	Power Drift (dB)	Measured 1g SAR (W/kg)	Reported 1g SAR (W/kg)
8	2.4GHz	802.11b	Front Face	0	6	2437	19.88	20	1.03	1.000	0.02	1.41	1.45
20	5.2GHz	11n HT40	Front Face	0	38	5190	12.81	13	1.04	1.017	0.02	1.43	1.51
27	5.8GHz	11n HT40	Front Face	0	151	5755	10.12	10.5	1.09	1.017	0.03	1.36	1.51

Note: Original Measured SAR / Repeated Measured SAR < 1.2

Test Engineer：Lynus

12.3 Simultaneous Transmission SAR

Position	Bluetooth (W/kg)	2.4 GHz W-FI SAR (W/kg)	Summed SAR (W/kg)	Limit (W/kg)
Front Face	0.00549	1.47	1.48	1.6
Rear Face	0.00232	0.23	0.23	1.6
Edge1	0.00540	0.54	0.55	1.6
Edge2	0.00535	0.16	0.17	1.6
Edge3	0.00338	0.77	0.77	1.6

Position	Bluetooth (W/kg)	5.2 GHz W-FI SAR (W/kg)	Summed SAR (W/kg)	Limit (W/kg)
Front Face	0.00549	1.51	1.52	1.6
Rear Face	0.00232	0.03	0.03	1.6
Edge1	0.00540	0.12	0.13	1.6
Edge2	0.00535	0.06	0.07	1.6
Edge3	0.00338	0.23	0.23	1.6

Position	Bluetooth (W/kg)	5.8 GHz W-FI SAR (W/kg)	Summed SAR (W/kg)	Limit (W/kg)
Front Face	0.00549	1.51	1.52	1.6
Rear Face	0.00232	0.05	0.05	1.6
Edge1	0.00540	0.07	0.08	1.6
Edge2	0.00535	0.05	0.06	1.6
Edge3	0.00338	0.35	0.35	1.6

Simultaneous transmission SAR evaluation is not required since summed SAR value is less than 1.6 W/kg.

13 Uncertainty Assessment

The component of uncertainly may generally be categorized according to the methods used to evaluate them. The evaluation of uncertainly by the statistical analysis of a series of observations is termed a Type An evaluation of uncertainty. The evaluation of uncertainty by means other than the statistical analysis of a series of observation is termed a Type B evaluation of uncertainty. Each component of uncertainty, however evaluated, is represented by an estimated standard deviation, termed standard uncertainty, which is determined by the positive square root of the estimated variance.

A Type A evaluation of standard uncertainty may be based on any valid statistical method for treating data. This includes calculating the standard deviation of the mean of a series of independent observations; using the method of least squares to fit a curve to the data in order to estimate the parameter of the curve and their standard deviations; or carrying out an analysis of variance in order to identify and quantify random effects in certain kinds of measurement.

A type B evaluation of standard uncertainty is typically based on scientific judgment using all of the relevant information available. These may include previous measurement data, experience, and knowledge of the behavior and properties of relevant materials and instruments, manufacture's specification, data provided in calibration reports and uncertainties assigned to reference data taken from handbooks. Broadly speaking, the uncertainty is either obtained from an outdoor source or obtained from an assumed distribution, such as the normal distribution, rectangular or triangular distributions indicated in Table 14.1

Uncertainty Distributions	Normal	Rectangular	Triangular	U-Shape
Multi-plying Factor[(a)]	1/k[(b)]	$1/\sqrt{3}$	$1/\sqrt{6}$	$1/\sqrt{2}$

(a) standard uncertainty is determined as the product of the multiplying factor and the estimated range of variations in the measured quantity

(b) κ is the coverage factor

Standard Uncertainty for Assumed Distribution

The combined standard uncertainty of the measurement result represents the estimated standard deviation of the result. It is obtained by combining the individual standard uncertainties of both Type A and Type B evaluation using the usual "root-sum-squares" (RSS) methods of combining standard deviations by taking the positive square root of the estimated variances.

Expanded uncertainty is a measure of uncertainty that defines an interval about the measurement result within which the measured value is confidently believed to lie. It is obtained by multiplying the combined standard uncertainty by a coverage factor. Typically, the coverage factor ranges from 2 to 3. Using a coverage factor allows the true value of a measured quantity to be specified with a defined probability within the specified uncertainty range. For purpose of this document, a coverage factor two is used, which corresponds to confidence interval of about 95 %. The DASY uncertainty Budget is shown in the following tables.

Error Description	Uncertainty Value (±%)	Probability Distribution	Divisor	Ci (1g)	Standard Uncertainty (±%) (1g)
Measurement System					
Probe Calibration	6.0	Normal	1.0	1.0	6.0
Axial Isotropy	4.7	Rectangular	√3	0.7	1.9
Hemispherical Isotropy	9.6	Rectangular	√3	0.7	3.9
Boundary effects	1.0	Rectangular	√3	1.0	0.6
Linearity	4.7	Rectangular	√3	1.0	2.7
System Detection Limits	1.0	Rectangular	√3	1.0	0.6
Modulation Response	2.4	Rectangular	√3	1.0	1.4
Readout Electronics	0.3	Normal	1.0	1.0	0.3
Response Time	0.8	Rectangular	√3	1.0	0.5
Integration Time	2.6	Rectangular	√3	1.0	1.5
RF Ambient Noise	3.0	Rectangular	√3	1.0	1.7
RF Ambient Reflections	3.0	Rectangular	√3	1.0	1.7
Probe Positioner	0.4	Rectangular	√3	1.0	0.2
Probe Positioning	2.9	Rectangular	√3	1.0	1.7
Max. SAR Eval.	2.0	Rectangular	√3	1.0	1.2
Dipole Related					
Device Positioning	2.9	Normal	1.0	1.0	2.9
Device Holder	3.6	Normal	1.0	1.0	3.6
Power Drift	5.0	Rectangular	√3	1.0	2.9
Power Scaling	0.0	Rectangular	√3	1.0	0.0
Phantom and Tissue parameters					
Phantom Uncertainty	6.1	Rectangular	√3	1.0	3.5
SAR corrction	1.9	Normal	1.0	1.0	1.9
Liquid Conductivity (measurement)	2.0	Normal	1.0	0.8	1.6
Liquid Permittivity (measurement)	2.1	Normal	1.0	0.3	0.5
Temp. unc. - Conduct	3.4	Rectangular	√3	0.8	1.5
Temp. unc. - Permittivity	0.4	Rectangular	√3	0.2	0.1
Combined Standard Uncertainty					11.2
Coverage Factor for 95 %					Kp=2
Expanded Uncertainty					22.4

Uncertainty Budget for frequency range 30 MHz to 3 GHz

Error Description	Uncertainty Value (±%)	Probability Distribution	Divisor	Ci (1g)	Standard Uncertainty (±%) (1g)
Measurement System					
Probe Calibration	6.6	Normal	1.0	1.0	6.6
Axial Isotropy	4.7	Rectangular	√3	0.7	1.9
Hemispherical Isotropy	9.6	Rectangular	√3	0.7	3.9
Boundary effects	2.0	Rectangular	√3	1.0	1.2
Linearity	4.7	Rectangular	√3	1.0	2.7
System Detection Limits	1.0	Rectangular	√3	1.0	0.6
Modulation Response	2.4	Rectangular	√3	1.0	1.4
Readout Electronics	0.3	Normal	1.0	1.0	0.3
Response Time	0.8	Rectangular	√3	1.0	0.5
Integration Time	2.6	Rectangular	√3	1.0	1.5
RF Ambient Noise	3.0	Rectangular	√3	1.0	1.7
RF Ambient Reflections	3.0	Rectangular	√3	1.0	1.7
Probe Positioner	0.8	Rectangular	√3	1.0	0.5
Probe Positioning	6.7	Rectangular	√3	1.0	3.9
Max. SAR Eval.	4.0	Rectangular	√3	1.0	2.3
Dipole Related					
Device Positioning	2.9	Normal	1.0	1.0	2.9
Device Holder	3.6	Normal	1.0	1.0	3.6
Power Drift	5.0	Rectangular	√3	1.0	2.9
Power Scaling	0.0	Rectangular	√3	1.0	0.0
Phantom and Tissue parameters					
Phantom Uncertainty	6.6	Rectangular	√3	1.0	3.8
SAR corrction	1.9	Normal	1.0	1.0	1.9
Liquid Conductivity (measurement)	2.0	Normal	1.0	0.8	1.6
Liquid Permittivity (measurement)	2.1	Normal	1.0	0.3	0.5
Temp. unc. - Conduct	3.4	Rectangular	√3	0.8	1.5
Temp. unc. - Permittivity	0.4	Rectangular	√3	0.2	0.1
Combined Standard Uncertainty					12.3
Coverage Factor for 95 %					Kp=2
Expanded Uncertainty					24.7

Uncertainty Budget for frequency range 3 GHz to 6 GHz

14 References

[1] FCC 47CFR Part 2 , “FREQUENCY ALLOCATIONS AND RADIO TREATY MATTERS; GENERAL RULES AND REGULATIONS”

[2] IEEE Std. C95.1-1992, “IEEE Standard for Safety Levels with Respect to Human Exposure to Radio Frequency Electromagnetic Fields, 3 kHz to 300 GHz”

[3] IEEE Std. 1528-2013 “IEEE Recommended Practice for Determining the Peak Spatial-Average Specific Absorption Rate (SAR) in the Human Head From Wireless Communications Devices: Measurement Techniques”

[4] SPEAG DASY System Handbook

[5] 447498 D01 General RF Exposure Guidance, “Mobile and Portable Devices RF Exposure Procedures and Equipment Authorization Policies”

[6] 865664 D01 SAR Measurement 100 MHz to 6 GHz, “SAR Measurement Requirements for 100 MHz to 6 GHz”

[7] 865664 D02 RF Exposure Reporting, “RF Exposure Compliance Reporting and Documentation Considerations”

[8] 248227 D01 802.11 Wi-Fi SAR, “SAR Guidance for IEEE 802.11 (Wi-Fi) Transmitters”

APPENDIX A. Plots of System Performance Check

System Check_B2450_160902

DUT: Dipole 2450MHz D2450V2_ SN: 929

Communication System: CW; Frequency: 2450 MHz;Duty Cycle: 1:1
Medium: B2450_160902 Medium parameters used: f = 2450 MHz; σ = 1.932 S/m; ε_r = 52.419; ρ = 1000 kg/m^3
Ambient Temperature：23.6 ℃; **Liquid Temperature**：22.5 ℃

DASY5 Configuration:
- Probe: EX3DV4 - SN3976; ConvF(7.45, 7.45, 7.45); Calibrated: 2016/2/22;
- Sensor-Surface: 2mm (Mechanical Surface Detection)
- Electronics: DAE4 Sn1424; Calibrated: 2016/2/16
- Phantom: ELI v5.0; Type: QDOVA002AA; Serial: TP:1238
- Measurement SW: DASY52, Version 52.8 (8); SEMCAD X Version 14.6.10 (7373)

Pin=250mW/Area Scan (81x81x1): Interpolated grid: dx=1.200 mm, dy=1.200 mm
Maximum value of SAR (interpolated) = 19.3 W/kg

Pin=250mW/Zoom Scan (7x7x7)/Cube 0: Measurement grid: dx=5mm, dy=5mm, dz=5mm
Reference Value = 100.5 V/m; Power Drift = 0.02 dB
Peak SAR (extrapolated) = 26.3 W/kg
SAR(1 g) = 12.7 W/kg; SAR(10 g) = 5.8 W/kg
Maximum value of SAR (measured) = 19.4 W/kg

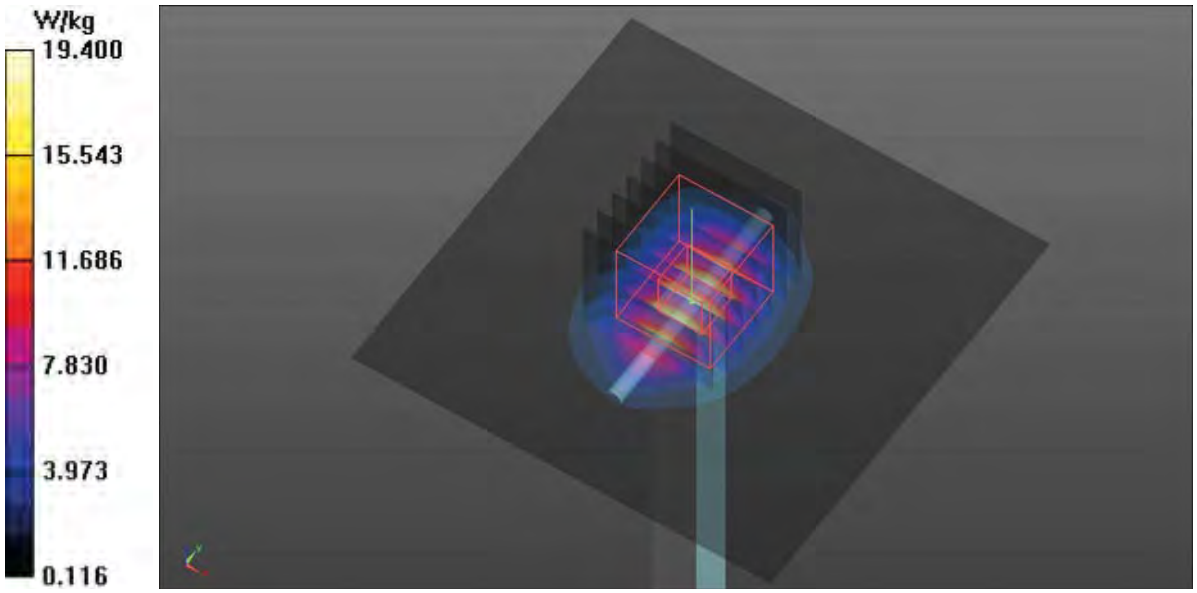

System Check_B2450_160905

DUT: Dipole 2450MHz D2450V2_ SN: 929

Communication System: CW; Frequency: 2450 MHz;Duty Cycle: 1:1
Medium: B2450_160905 Medium parameters used: f = 2450 MHz; σ = 1.923 S/m; ε_r = 52.369; ρ = 1000 kg/m^3
Ambient Temperature：23.6 ℃; **Liquid Temperature**：22.5 ℃

DASY5 Configuration:
- Probe: EX3DV4 - SN3976; ConvF(7.45, 7.45, 7.45); Calibrated: 2016/2/22;
- Sensor-Surface: 2mm (Mechanical Surface Detection)
- Electronics: DAE4 Sn1424; Calibrated: 2016/2/16
- Phantom: ELI v5.0; Type: QDOVA002AA; Serial: TP:1238
- Measurement SW: DASY52, Version 52.8 (8); SEMCAD X Version 14.6.10 (7373)

Pin=250mW/Area Scan (81x81x1): Interpolated grid: dx=1.200 mm, dy=1.200 mm
Maximum value of SAR (interpolated) = 19.4 W/kg

Pin=250mW/Zoom Scan (7x7x7)/Cube 0: Measurement grid: dx=5mm, dy=5mm, dz=5mm
Reference Value = 98.68 V/m; Power Drift = 0.06 dB
Peak SAR (extrapolated) = 26.9 W/kg
SAR(1 g) = 12.9 W/kg; SAR(10 g) = 5.92 W/kg
Maximum value of SAR (measured) = 19.9 W/kg

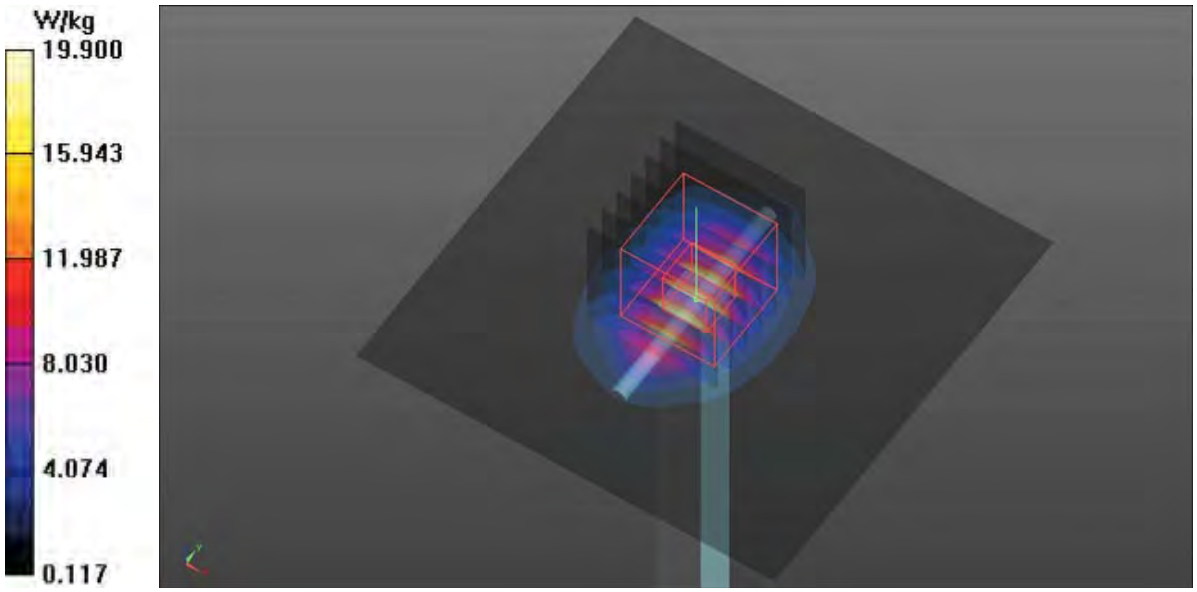

System Check_B5200_160919

DUT: Dipole D5GHzV2_SN:1171

Communication System: CW; Frequency: 5200 MHz;Duty Cycle: 1:1
Medium: B5G_160919 Medium parameters used: f = 5200 MHz; σ = 5.097 S/m; ε_r = 49.229; ρ = 1000 kg/m^3
Ambient Temperature：23.6 ℃; **Liquid Temperature**：22.5 ℃

DASY5 Configuration:
- Probe: EX3DV4 - SN3976; ConvF(4.4, 4.4, 4.4); Calibrated: 2016/2/22;
- Sensor-Surface: 2mm (Mechanical Surface Detection)
- Electronics: DAE4 Sn1424; Calibrated: 2016/2/16
- Phantom: ELI v5.0; Type: QDOVA002AA; Serial: TP:1238
- Measurement SW: DASY52, Version 52.8 (8); SEMCAD X Version 14.6.10 (7373)

Pin=100mW/Area Scan (91x91x1): Interpolated grid: dx=1.000 mm, dy=1.000 mm
Maximum value of SAR (interpolated) = 14.0 W/kg

Pin=100mW/Zoom Scan (7x7x12)/Cube 0: Measurement grid: dx=4mm, dy=4mm, dz=2mm
Reference Value = 58.13 V/m; Power Drift = 0.04 dB
Peak SAR (extrapolated) = 29.4 W/kg
SAR(1 g) = 7.35 W/kg; SAR(10 g) = 2.08 W/kg
Maximum value of SAR (measured) = 15.3 W/kg

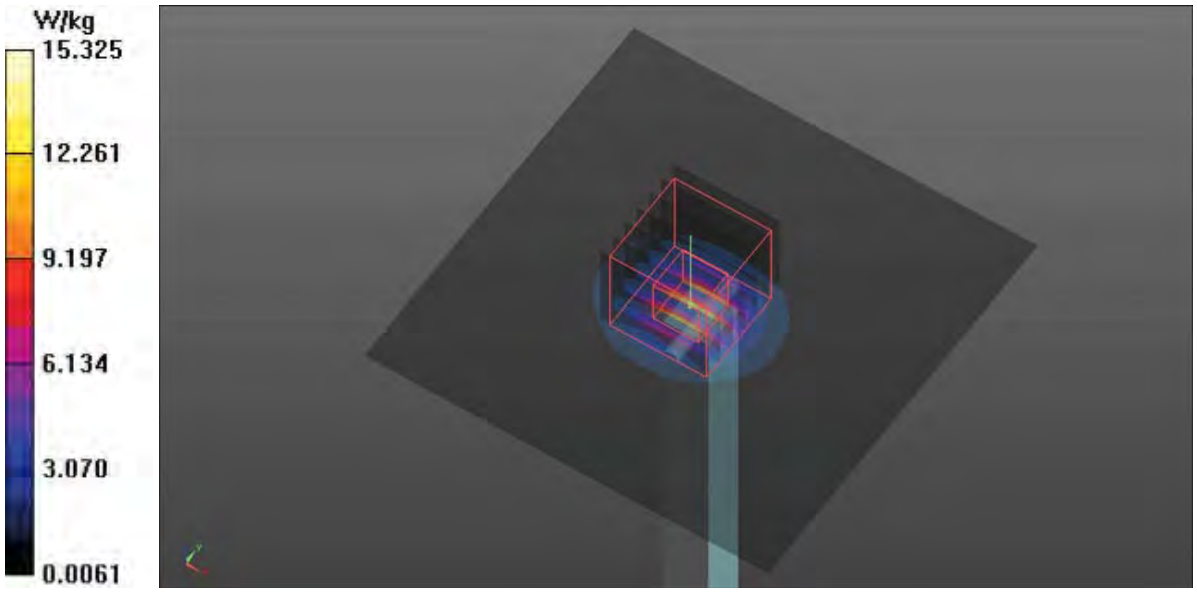

System Check_B5800_160919

DUT: Dipole D5GHzV2_SN: 1171

Communication System: CW; Frequency: 5800 MHz;Duty Cycle: 1:1
Medium: B5G_160919 Medium parameters used: f = 5800 MHz; σ = 5.957 S/m; ε_r = 47.101; ρ = 1000 kg/m^3
Ambient Temperature：23.6 ℃; **Liquid Temperature**：22.5 ℃

DASY5 Configuration:
- Probe: EX3DV4 - SN3976; ConvF(3.96, 3.96, 3.96); Calibrated: 2016/2/22;
- Sensor-Surface: 2mm (Mechanical Surface Detection)
- Electronics: DAE4 Sn1424; Calibrated: 2016/2/16
- Phantom: ELI v5.0; Type: QDOVA002AA; Serial: TP:1238
- Measurement SW: DASY52, Version 52.8 (8); SEMCAD X Version 14.6.10 (7373)

Pin=100mW/Area Scan (91x91x1): Interpolated grid: dx=1.000 mm, dy=1.000 mm
Maximum value of SAR (interpolated) = 13.5 W/kg

Pin=100mW/Zoom Scan (7x7x12)/Cube 0: Measurement grid: dx=4mm, dy=4mm, dz=2mm
Reference Value = 53.07 V/m; Power Drift = 0.02 dB
Peak SAR (extrapolated) = 30.4 W/kg
SAR(1 g) = 7.19 W/kg; SAR(10 g) = 2.03 W/kg
Maximum value of SAR (measured) = 15.4 W/kg

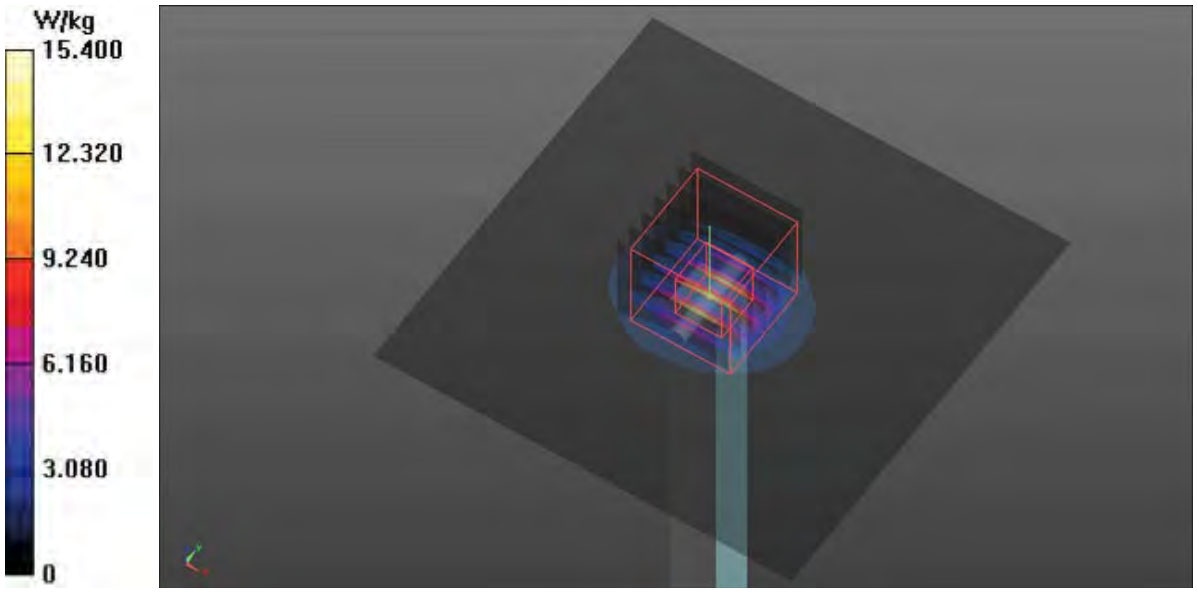

System Check_B2450_161116

DUT: Dipole 2450MHz D2450V2_ SN: 929

Communication System: CW; Frequency: 2450 MHz;Duty Cycle: 1:1
Medium: B2450_161116 Medium parameters used: f = 2450 MHz; σ = 1.934 S/m; ε_r = 52.226; ρ = 1000 kg/m^3
Ambient Temperature：23.4 ℃; **Liquid Temperature**：22.2 ℃

DASY5 Configuration:
- Probe: EX3DV4 - SN3976; ConvF(7.45, 7.45, 7.45); Calibrated: 2016/2/22;
- Sensor-Surface: 2mm (Mechanical Surface Detection)
- Electronics: DAE4 Sn1424; Calibrated: 2016/2/16
- Phantom: ELI v5.0; Type: QDOVA002AA; Serial: TP:1238
- Measurement SW: DASY52, Version 52.8 (8); SEMCAD X Version 14.6.10 (7373)

Pin=250mW/Area Scan (81x81x1): Interpolated grid: dx=1.200 mm, dy=1.200 mm
Maximum value of SAR (interpolated) = 19.4 W/kg

Pin=250mW/Zoom Scan (7x7x7)/Cube 0: Measurement grid: dx=5mm, dy=5mm, dz=5mm
Reference Value = 100.5 V/m; Power Drift = 0.01 dB
Peak SAR (extrapolated) = 26.3 W/kg
SAR(1 g) = 12.7 W/kg; SAR(10 g) = 5.81 W/kg
Maximum value of SAR (measured) = 19.4 W/kg

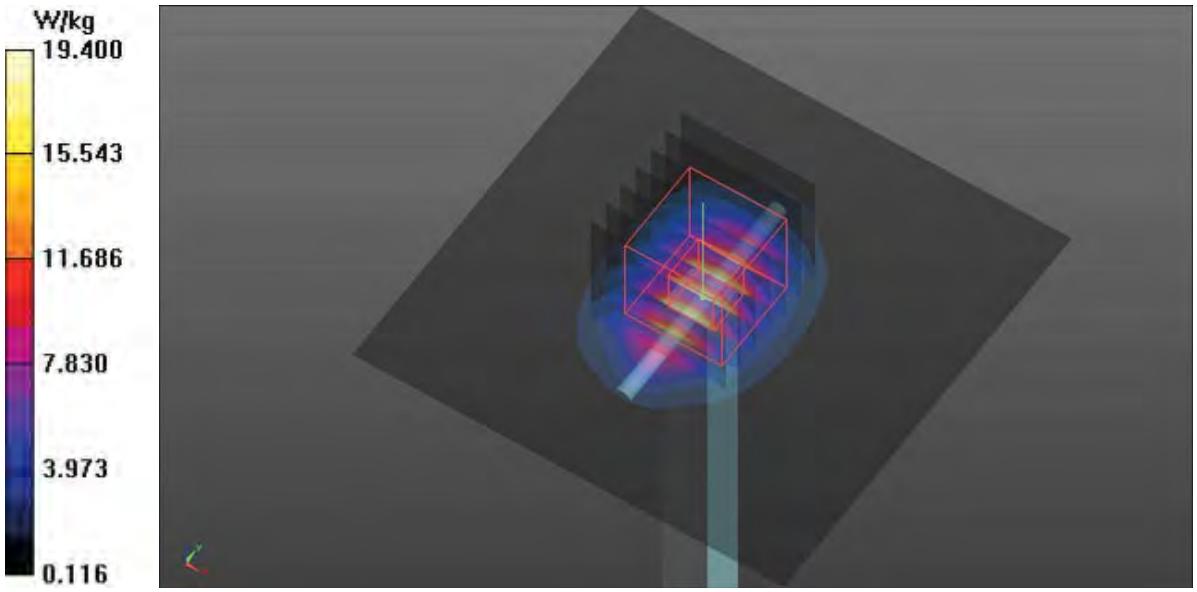

System Check_B5200_161115

DUT: Dipole D5GHzV2_ SN: 1023

Communication System: CW; Frequency: 5200 MHz;Duty Cycle: 1:1
Medium: B5G_161115 Medium parameters used: f = 5200 MHz; σ = 5.186 S/m; ε_r = 48.039; ρ = 1000 kg/m^3
Ambient Temperature：23.4 ℃; **Liquid Temperature**：22.2 ℃

DASY5 Configuration:
- Probe: EX3DV4 - SN3976; ConvF(4.4, 4.4, 4.4); Calibrated: 2016/2/22;
- Sensor-Surface: 2mm (Mechanical Surface Detection)
- Electronics: DAE4 Sn1424; Calibrated: 2016/2/16
- Phantom: ELI v5.0; Type: QDOVA002AA; Serial: TP:1238
- Measurement SW: DASY52, Version 52.8 (8); SEMCAD X Version 14.6.10 (7373)

Pin=100mW/Area Scan (91x91x1): Interpolated grid: dx=1.000 mm, dy=1.000 mm
Maximum value of SAR (interpolated) = 13.9 W/kg

Pin=100mW/Zoom Scan (7x7x12)/Cube 0: Measurement grid: dx=4mm, dy=4mm, dz=2mm
Reference Value = 56.63 V/m; Power Drift = 0.22 dB
Peak SAR (extrapolated) = 28.8 W/kg
SAR(1 g) = 7.09 W/kg; SAR(10 g) = 2.02 W/kg
Maximum value of SAR (measured) = 14.8 W/kg

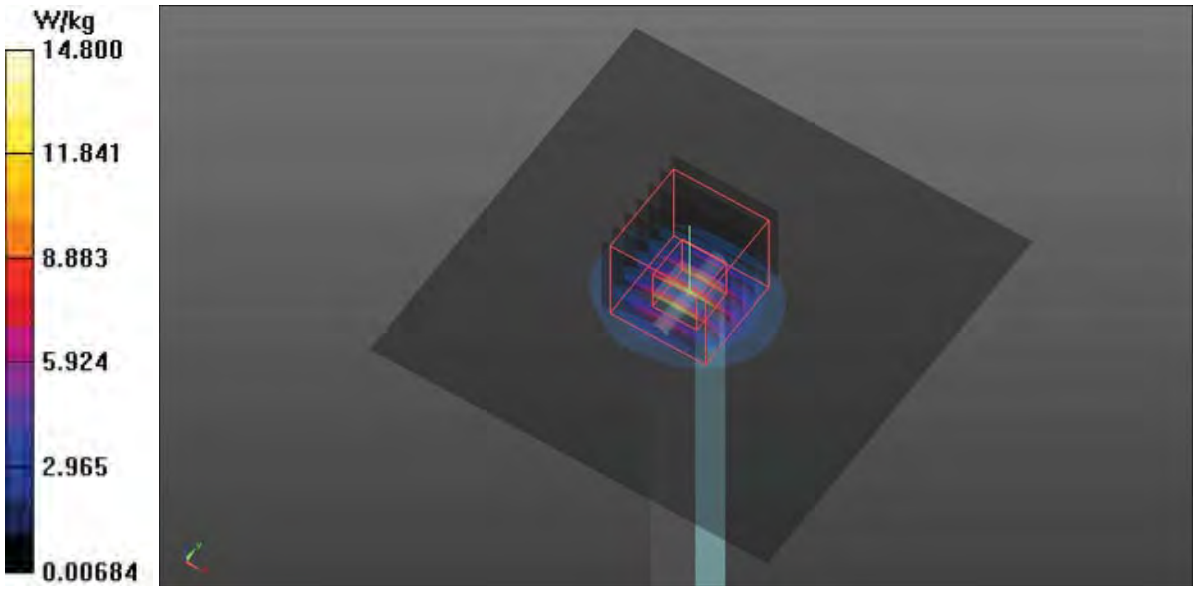

System Check_B5800_161116

DUT: Dipole D5GHzV2_ SN: 1171

Communication System: CW; Frequency: 5800 MHz;Duty Cycle: 1:1
Medium: B5G_161116 Medium parameters used: f = 5800 MHz; σ = 5.957 S/m; ε_r = 47.101; ρ = 1000 kg/m^3
Ambient Temperature：23.4 ℃; **Liquid Temperature**：22.2 ℃

DASY5 Configuration:
- Probe: EX3DV4 - SN3976; ConvF(3.96, 3.96, 3.96); Calibrated: 2016/2/22;
- Sensor-Surface: 2mm (Mechanical Surface Detection)
- Electronics: DAE4 Sn1424; Calibrated: 2016/2/16
- Phantom: ELI v5.0; Type: QDOVA002AA; Serial: TP:1238
- Measurement SW: DASY52, Version 52.8 (8); SEMCAD X Version 14.6.10 (7373)

Pin=100mW/Area Scan (91x91x1): Interpolated grid: dx=1.000 mm, dy=1.000 mm
Maximum value of SAR (interpolated) = 13.5 W/kg

Pin=100mW/Zoom Scan (7x7x12)/Cube 0: Measurement grid: dx=4mm, dy=4mm, dz=2mm
Reference Value = 53.07 V/m; Power Drift = 0.02 dB
Peak SAR (extrapolated) = 30.4 W/kg
SAR(1 g) = 7.19 W/kg; SAR(10 g) = 2.03 W/kg
Maximum value of SAR (measured) = 15.4 W/kg

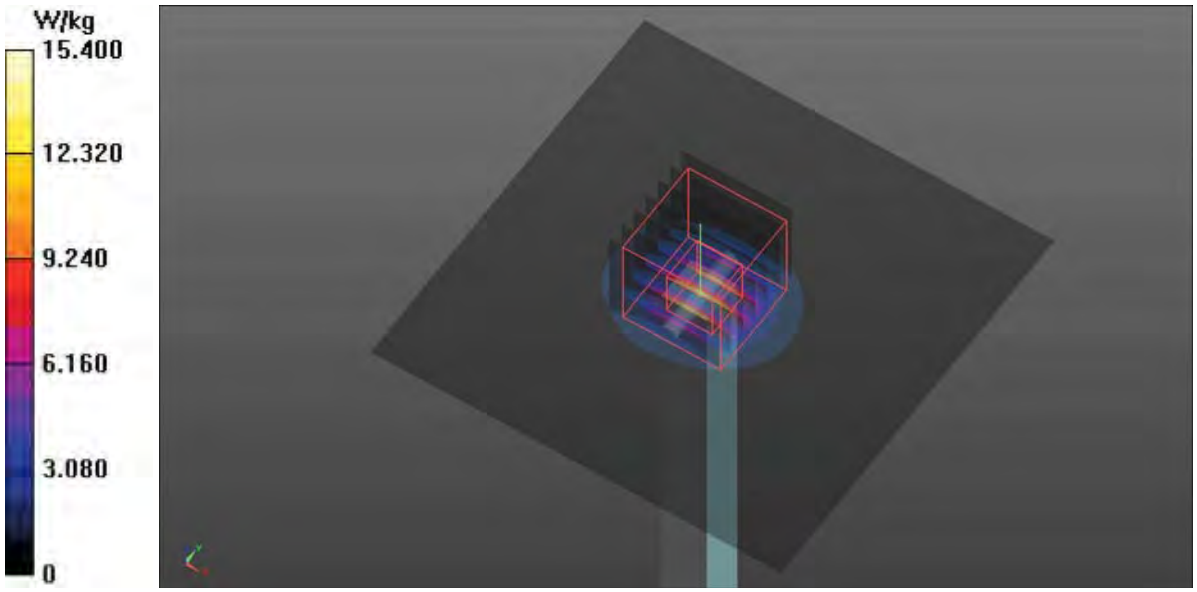

APPENDIX B. Plots of SAR Measurement

P01 802.11b_Front Face_0cm_Ch6

DUT: 681802

Communication System: WLAN_2.4G; Frequency: 2437 MHz;Duty Cycle: 1:1
Medium: B2450_160902 Medium parameters used: f = 2437 MHz; σ = 1.916 S/m; ε_r = 52.46; ρ = 1000 kg/m^3
Ambient Temperature：23.6 ℃; **Liquid Temperature**：22.5 ℃

DASY5 Configuration:
- Probe: EX3DV4 - SN3976; ConvF(7.45, 7.45, 7.45); Calibrated: 2016/2/22;
- Sensor-Surface: 2mm (Mechanical Surface Detection)
- Electronics: DAE4 Sn1424; Calibrated: 2016/2/16
- Phantom: ELI v5.0; Type: QDOVA002AA; Serial: TP:1238
- Measurement SW: DASY52, Version 52.8 (8); SEMCAD X Version 14.6.10 (7373)

Ch6/Area Scan (71x131x1): Interpolated grid: dx=1.200 mm, dy=1.200 mm
Maximum value of SAR (interpolated) = 1.86 W/kg

Ch6/Zoom Scan (5x5x7)/Cube 0: Measurement grid: dx=8mm, dy=8mm, dz=5mm
Reference Value = 4.071 V/m; Power Drift = 0.01 dB
Peak SAR (extrapolated) = 3.48 W/kg
SAR(1 g) = 1.43 W/kg; SAR(10 g) = 0.598 W/kg
Maximum value of SAR (measured) = 2.08 W/kg

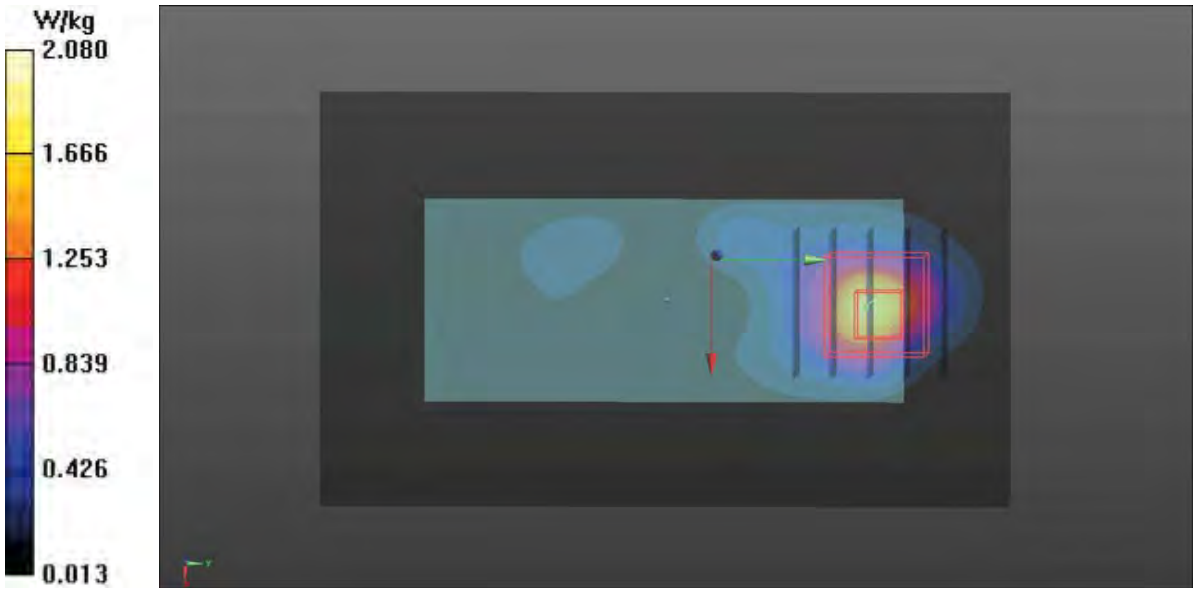

P19 802.11n_HT40_Front Face_0cm_Ch38

DUT: 681802

Communication System: WLAN_5G; Frequency: 5190 MHz;Duty Cycle: 1:017
Medium: B5G_160919 Medium parameters used: f = 5190 MHz; σ = 5.174 S/m; ε_r = 48.052; ρ = 1000 kg/m^3
Ambient Temperature：23.6 ℃; **Liquid Temperature**：22.5 ℃

DASY5 Configuration:
- Probe: EX3DV4 - SN3976; ConvF(4.4, 4.4, 4.4); Calibrated: 2016/2/22;
- Sensor-Surface: 2mm (Mechanical Surface Detection)
- Electronics: DAE4 Sn1424; Calibrated: 2016/2/16
- Phantom: ELI v5.0; Type: QDOVA002AA; Serial: TP:1238
- Measurement SW: DASY52, Version 52.8 (8); SEMCAD X Version 14.6.10 (7373)

Ch38/Area Scan (61x121x1): Interpolated grid: dx=1.000 mm, dy=1.000 mm
Maximum value of SAR (interpolated) = 1.36 W/kg

Ch38/Zoom Scan (6x6x12)/Cube 0: Measurement grid: dx=5mm, dy=5mm, dz=2mm
Reference Value = 3.916 V/m; Power Drift = 0.02 dB
Peak SAR (extrapolated) = 7.87 W/kg
SAR(1 g) = 1.43 W/kg; SAR(10 g) = 0.336 W/kg
Maximum value of SAR (measured) = 3.53 W/kg

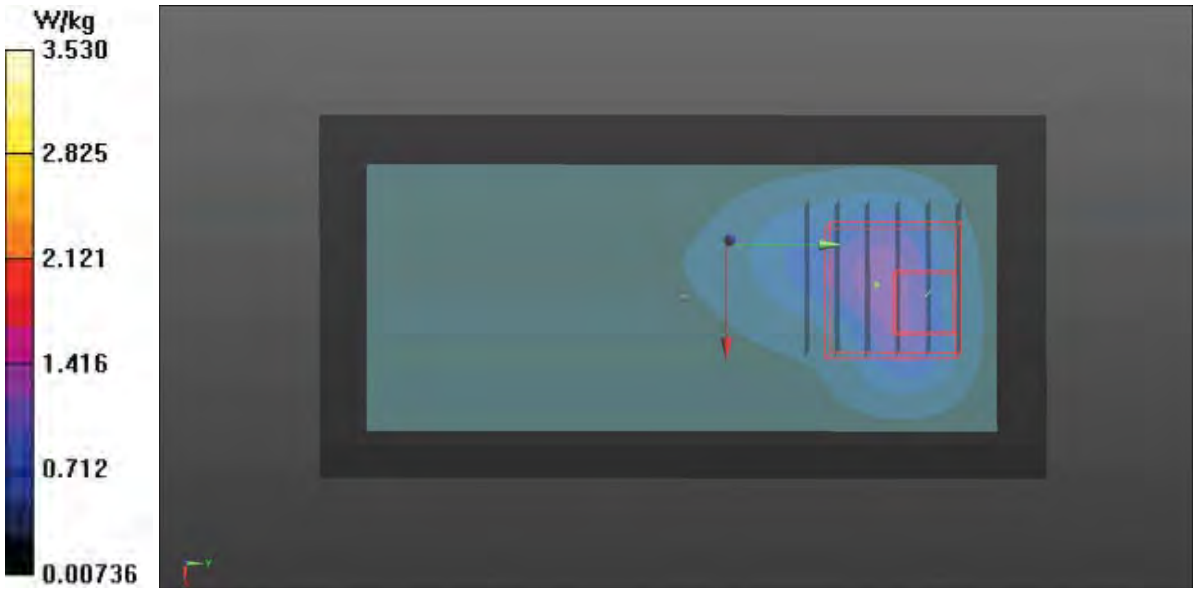

P26 802.11n_HT40_Front Face_0cm_Ch151

DUT: 681802

Communication System: WLAN_5G; Frequency: 5755 MHz;Duty Cycle: 1:017
Medium: B5G_160919 Medium parameters used: f = 5755 MHz; σ = 5.886 S/m; ε_r = 47.139; ρ = 1000 kg/m^3
Ambient Temperature：23.6 ℃; **Liquid Temperature**：22.5 ℃

DASY5 Configuration:
- Probe: EX3DV4 - SN3976; ConvF(3.96, 3.96, 3.96); Calibrated: 2016/2/22;
- Sensor-Surface: 2mm (Mechanical Surface Detection)
- Electronics: DAE4 Sn1424; Calibrated: 2016/2/16
- Phantom: ELI v5.0; Type: QDOVA002AA; Serial: TP:1238
- Measurement SW: DASY52, Version 52.8 (8); SEMCAD X Version 14.6.10 (7373)

Ch151/Area Scan (61x121x1): Interpolated grid: dx=1.000 mm, dy=1.000 mm
Maximum value of SAR (interpolated) = 1.60 W/kg

Ch151/Zoom Scan (6x6x12)/Cube 0: Measurement grid: dx=5mm, dy=5mm, dz=2mm
Reference Value = 2.041 V/m; Power Drift = 0.03 dB
Peak SAR (extrapolated) = 7.51 W/kg
SAR(1 g) = 1.36 W/kg; SAR(10 g) = 0.316 W/kg
Maximum value of SAR (measured) = 3.06 W/kg

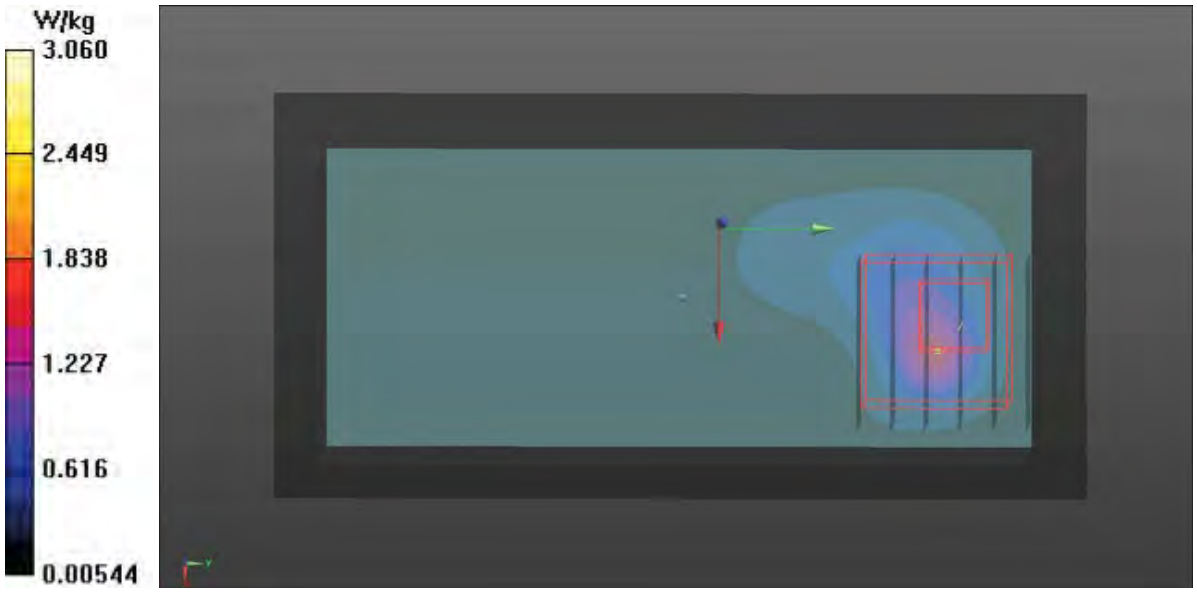

P09 Bluetooth_Front Face_0cm_Ch39

DUT: 681802

Communication System: Bluetooth_2.0; Frequency: 2441 MHz;Duty Cycle: 1:1
Medium: B2450_160905 Medium parameters used: f = 2441 MHz; σ = 1.912 S/m; ε_r = 52.393; ρ = 1000 kg/m^3
Ambient Temperature：23.6 ℃; **Liquid Temperature**：22.5 ℃

DASY5 Configuration:
- Probe: EX3DV4 - SN3976; ConvF(7.45, 7.45, 7.45); Calibrated: 2016/2/22;
- Sensor-Surface: 2mm (Mechanical Surface Detection)
- Electronics: DAE4 Sn1424; Calibrated: 2016/2/16
- Phantom: ELI v5.0; Type: QDOVA002AA; Serial: TP:1238
- Measurement SW: DASY52, Version 52.8 (8); SEMCAD X Version 14.6.10 (7373)

Ch39/Area Scan (51x111x1): Interpolated grid: dx=1.200 mm, dy=1.200 mm
Maximum value of SAR (interpolated) = 0.00941 W/kg

Ch39/Zoom Scan (5x5x7)/Cube 0: Measurement grid: dx=8mm, dy=8mm, dz=5mm
Reference Value = 0.3860 V/m; Power Drift = 0.08 dB
Peak SAR (extrapolated) = 0.00640 W/kg
SAR(1 g) = 0.00513 W/kg; SAR(10 g) = 0.00336 W/kg
Maximum value of SAR (measured) = 0.00604 W/kg

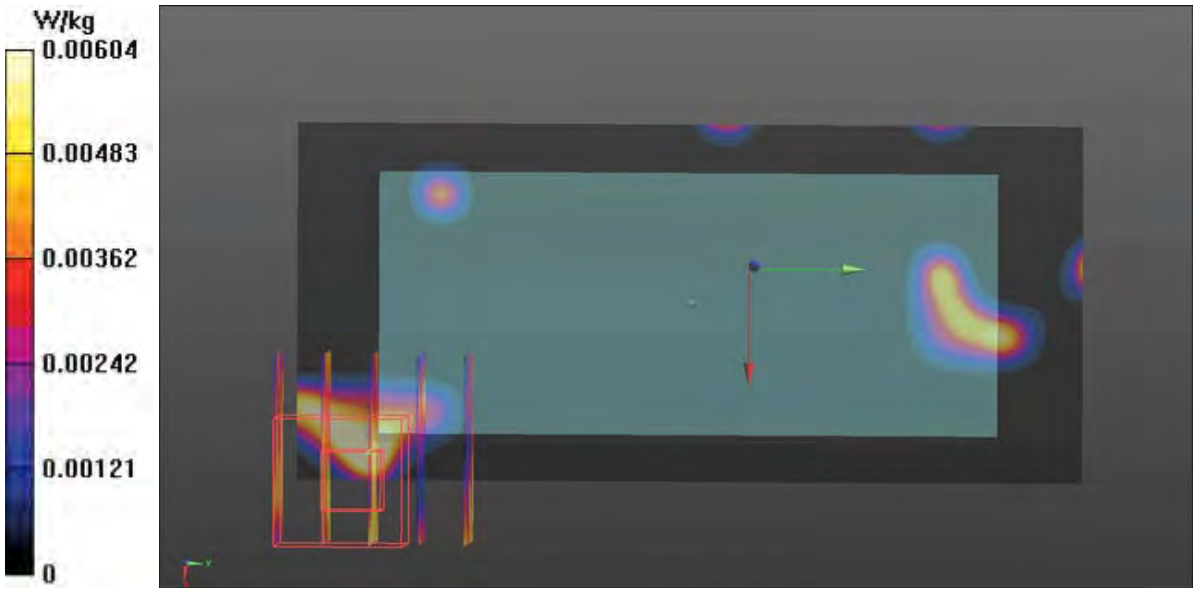

P46 802.11n_HT20_Front Face_0cm_Ch6

DUT: 681802

Communication System: WLAN_2.4G; Frequency: 2437 MHz;Duty Cycle: 1:1
Medium: B2450_161116 Medium parameters used: f = 2437 MHz; σ = 1.918 S/m; ε_r = 52.261; ρ = 1000 kg/m^3
Ambient Temperature：23.4 ℃; **Liquid Temperature**：22.2 ℃

DASY5 Configuration:
- Probe: EX3DV4 - SN3976; ConvF(7.45, 7.45, 7.45); Calibrated: 2016/2/22;
- Sensor-Surface: 2mm (Mechanical Surface Detection)
- Electronics: DAE4 Sn1424; Calibrated: 2016/2/16
- Phantom: ELI v5.0; Type: QDOVA002AA; Serial: TP:1238
- Measurement SW: DASY52, Version 52.8 (8); SEMCAD X Version 14.6.10 (7373)

Ch6/Area Scan (61x101x1): Interpolated grid: dx=1.200 mm, dy=1.200 mm
Maximum value of SAR (interpolated) = 2.12 W/kg

Ch6/Zoom Scan (5x5x7)/Cube 0: Measurement grid: dx=8mm, dy=8mm, dz=5mm
Reference Value = 3.268 V/m; Power Drift = 0.07 dB
Peak SAR (extrapolated) = 2.79 W/kg
SAR(1 g) = 1.18 W/kg; SAR(10 g) = 0.503 W/kg
Maximum value of SAR (measured) = 1.66 W/kg

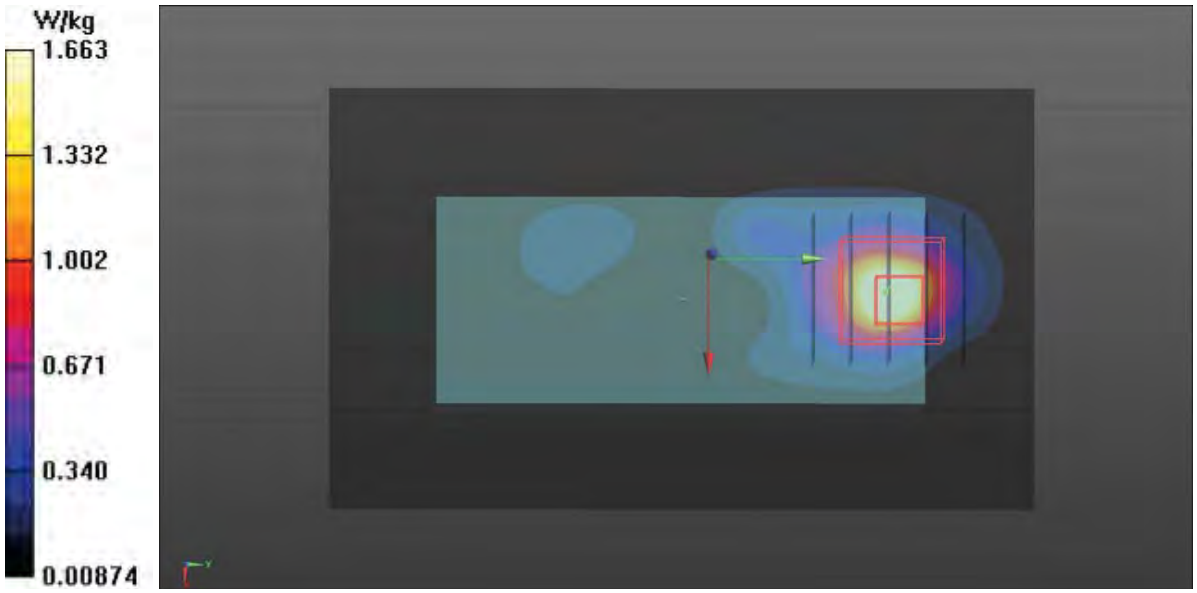

P31 802.11a_Front Face_0cm_Ch48

DUT: 681802

Communication System: WLAN_5G; Frequency: 5240 MHz;Duty Cycle: 1:1.004
Medium: B5G_161115 Medium parameters used: f = 5240 MHz; σ = 5.232 S/m; ε_r = 47.977; ρ = 1000 kg/m^3
Ambient Temperature：23.4 ℃; **Liquid Temperature**：22.2 ℃

DASY5 Configuration:
- Probe: EX3DV4 - SN3976; ConvF(4.4, 4.4, 4.4); Calibrated: 2016/2/22;
- Sensor-Surface: 2mm (Mechanical Surface Detection)
- Electronics: DAE4 Sn1424; Calibrated: 2016/2/16
- Phantom: ELI v5.0; Type: QDOVA002AA; Serial: TP:1238
- Measurement SW: DASY52, Version 52.8 (8); SEMCAD X Version 14.6.10 (7373)

Ch48/Area Scan (61x121x1): Interpolated grid: dx=1.000 mm, dy=1.000 mm
Maximum value of SAR (interpolated) = 2.80 W/kg

Ch48/Zoom Scan (6x6x12)/Cube 0: Measurement grid: dx=5mm, dy=5mm, dz=2mm
Reference Value = 3.646 V/m; Power Drift = 0.02 dB
Peak SAR (extrapolated) = 7.86 W/kg
SAR(1 g) = 1.35 W/kg; SAR(10 g) = 0.308 W/kg
Maximum value of SAR (measured) = 3.22 W/kg

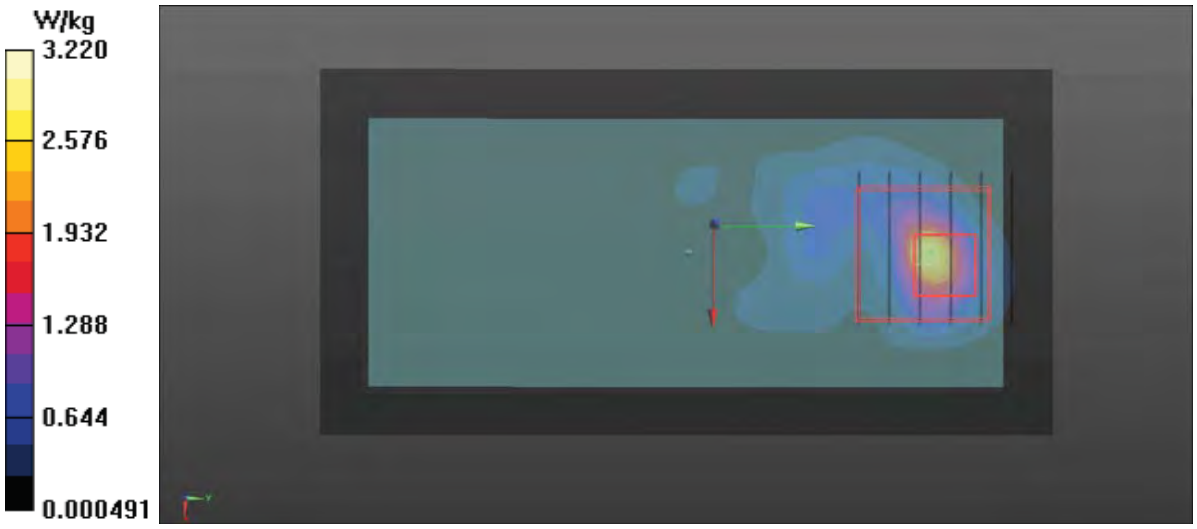

P41 802.11n_HT20_Front Face_0cm_Ch149

DUT: 681802

Communication System: WLAN_5G; Frequency: 5745 MHz;Duty Cycle: 1:1.004
Medium: B5G_161116 Medium parameters used: f = 5745 MHz; σ = 5.869 S/m; ε_r = 47.158; ρ = 1000 kg/m^3
Ambient Temperature：23.4 ℃; **Liquid Temperature**：22.2 ℃

DASY5 Configuration:
- Probe: EX3DV4 - SN3976; ConvF(3.96, 3.96, 3.96); Calibrated: 2016/2/22;
- Sensor-Surface: 2mm (Mechanical Surface Detection)
- Electronics: DAE4 Sn1424; Calibrated: 2016/2/16
- Phantom: ELI v5.0; Type: QDOVA002AA; Serial: TP:1238
- Measurement SW: DASY52, Version 52.8 (8); SEMCAD X Version 14.6.10 (7373)

Ch149/Area Scan (61x121x1): Interpolated grid: dx=1.000 mm, dy=1.000 mm
Maximum value of SAR (interpolated) = 3.00 W/kg

Ch149/Zoom Scan (6x6x12)/Cube 0: Measurement grid: dx=5mm, dy=5mm, dz=2mm
Reference Value = 2.504 V/m; Power Drift = 0.02 dB
Peak SAR (extrapolated) = 7.83 W/kg
SAR(1 g) = 1.32 W/kg; SAR(10 g) = 0.335 W/kg
Maximum value of SAR (measured) = 3.09 W/kg

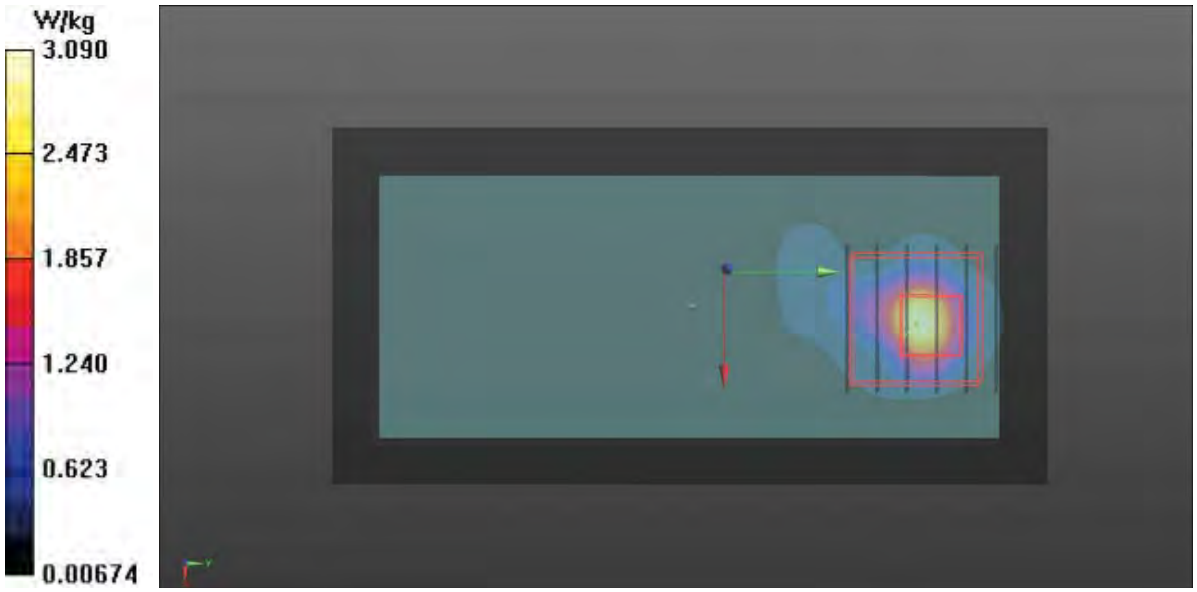

APPENDIX C. DASY Calibration Certificate

Calibration Laboratory of
Schmid & Partner
Engineering AG
Zeughausstrasse 43, 8004 Zurich, Switzerland

S Schweizerischer Kalibrierdienst
C Service suisse d'étalonnage
Servizio svizzero di taratura
S Swiss Calibration Service

Accredited by the Swiss Accreditation Service (SAS)
The Swiss Accreditation Service is one of the signatories to the EA Multilateral Agreement for the recognition of calibration certificates

Accreditation No.: SCS 0108

Client Sporton-ICC (Auden)

Certificate No: D2450V2-929_Feb16

CALIBRATION CERTIFICATE

Object	D2450V2 - SN: 929
Calibration procedure(s)	QA CAL-05.v9 Calibration procedure for dipole validation kits above 700 MHz
Calibration date:	February 09, 2016

This calibration certificate documents the traceability to national standards, which realize the physical units of measurements (SI).
The measurements and the uncertainties with confidence probability are given on the following pages and are part of the certificate.

All calibrations have been conducted in the closed laboratory facility: environment temperature (22 ± 3)°C and humidity < 70%.

Calibration Equipment used (M&TE critical for calibration)

Primary Standards	ID #	Cal Date (Certificate No.)	Scheduled Calibration
Power meter EPM-442A	GB37480704	07-Oct-15 (No. 217-02222)	Oct-16
Power sensor HP 8481A	US37292783	07-Oct-15 (No. 217-02222)	Oct-16
Power sensor HP 8481A	MY41092317	07-Oct-15 (No. 217-02223)	Oct-16
Reference 20 dB Attenuator	SN: 5058 (20k)	01-Apr-15 (No. 217-02131)	Mar-16
Type-N mismatch combination	SN: 5047.2 / 06327	01-Apr-15 (No. 217-02134)	Mar-16
Reference Probe EX3DV4	SN: 7349	31-Dec-15 (No. EX3-7349_Dec15)	Dec-16
DAE4	SN: 601	30-Dec-15 (No. DAE4-601_Dec15)	Dec-16

Secondary Standards	ID #	Check Date (in house)	Scheduled Check
RF generator R&S SMT-06	100972	15-Jun-15 (in house check Jun-15)	In house check: Jun-18
Network Analyzer HP 8753E	US37390585 S4206	18-Oct-01 (in house check Oct-15)	In house check: Oct-16

	Name	Function	Signature
Calibrated by:	Michael Weber	Laboratory Technician	M.Weber
Approved by:	Katja Pokovic	Technical Manager	

Issued: February 10, 2016

This calibration certificate shall not be reproduced except in full without written approval of the laboratory.

Glossary:

TSL	tissue simulating liquid
ConvF	sensitivity in TSL / NORM x,y,z
N/A	not applicable or not measured

Calibration is Performed According to the Following Standards:

a) IEEE Std 1528-2013, "IEEE Recommended Practice for Determining the Peak Spatial-Averaged Specific Absorption Rate (SAR) in the Human Head from Wireless Communications Devices: Measurement Techniques", June 2013
b) IEC 62209-1, "Procedure to measure the Specific Absorption Rate (SAR) for hand-held devices used in close proximity to the ear (frequency range of 300 MHz to 3 GHz)", February 2005
c) IEC 62209-2, "Procedure to determine the Specific Absorption Rate (SAR) for wireless communication devices used in close proximity to the human body (frequency range of 30 MHz to 6 GHz)", March 2010
d) KDB 865664, "SAR Measurement Requirements for 100 MHz to 6 GHz"

Additional Documentation:

e) DASY4/5 System Handbook

Methods Applied and Interpretation of Parameters:

- *Measurement Conditions:* Further details are available from the Validation Report at the end of the certificate. All figures stated in the certificate are valid at the frequency indicated.
- *Antenna Parameters with TSL:* The dipole is mounted with the spacer to position its feed point exactly below the center marking of the flat phantom section, with the arms oriented parallel to the body axis.
- *Feed Point Impedance and Return Loss:* These parameters are measured with the dipole positioned under the liquid filled phantom. The impedance stated is transformed from the measurement at the SMA connector to the feed point. The Return Loss ensures low reflected power. No uncertainty required.
- *Electrical Delay:* One-way delay between the SMA connector and the antenna feed point. No uncertainty required.
- *SAR measured:* SAR measured at the stated antenna input power.
- *SAR normalized:* SAR as measured, normalized to an input power of 1 W at the antenna connector.
- *SAR for nominal TSL parameters:* The measured TSL parameters are used to calculate the nominal SAR result.

The reported uncertainty of measurement is stated as the standard uncertainty of measurement multiplied by the coverage factor k=2, which for a normal distribution corresponds to a coverage probability of approximately 95%.

Measurement Conditions

DASY system configuration, as far as not given on page 1.

DASY Version	DASY5	V52.8.8
Extrapolation	Advanced Extrapolation	
Phantom	Modular Flat Phantom	
Distance Dipole Center - TSL	10 mm	with Spacer
Zoom Scan Resolution	dx, dy, dz = 5 mm	
Frequency	2450 MHz ± 1 MHz	

Head TSL parameters

The following parameters and calculations were applied.

	Temperature	**Permittivity**	**Conductivity**
Nominal Head TSL parameters	22.0 °C	39.2	1.80 mho/m
Measured Head TSL parameters	(22.0 ± 0.2) °C	38.7 ± 6 %	1.84 mho/m ± 6 %
Head TSL temperature change during test	< 0.5 °C	----	----

SAR result with Head TSL

SAR averaged over 1 cm³ (1 g) of Head TSL	Condition	
SAR measured	250 mW input power	13.0 W/kg
SAR for nominal Head TSL parameters	normalized to 1W	**51.3 W/kg ± 17.0 % (k=2)**

SAR averaged over 10 cm³ (10 g) of Head TSL	condition	
SAR measured	250 mW input power	6.00 W/kg
SAR for nominal Head TSL parameters	normalized to 1W	**23.8 W/kg ± 16.5 % (k=2)**

Body TSL parameters

The following parameters and calculations were applied.

	Temperature	**Permittivity**	**Conductivity**
Nominal Body TSL parameters	22.0 °C	52.7	1.95 mho/m
Measured Body TSL parameters	(22.0 ± 0.2) °C	52.9 ± 6 %	2.00 mho/m ± 6 %
Body TSL temperature change during test	< 0.5 °C	----	----

SAR result with Body TSL

SAR averaged over 1 cm³ (1 g) of Body TSL	Condition	
SAR measured	250 mW input power	12.6 W/kg
SAR for nominal Body TSL parameters	normalized to 1W	**49.8 W/kg ± 17.0 % (k=2)**

SAR averaged over 10 cm³ (10 g) of Body TSL	condition	
SAR measured	250 mW input power	5.90 W/kg
SAR for nominal Body TSL parameters	normalized to 1W	**23.5 W/kg ± 16.5 % (k=2)**

Appendix (Additional assessments outside the scope of SCS 0108)

Antenna Parameters with Head TSL

Impedance, transformed to feed point	52.7 Ω + 3.9 jΩ
Return Loss	- 26.8 dB

Antenna Parameters with Body TSL

Impedance, transformed to feed point	49.2 Ω + 6.5 jΩ
Return Loss	- 23.6 dB

General Antenna Parameters and Design

Electrical Delay (one direction)	1.161 ns

After long term use with 100W radiated power, only a slight warming of the dipole near the feedpoint can be measured.

The dipole is made of standard semirigid coaxial cable. The center conductor of the feeding line is directly connected to the second arm of the dipole. The antenna is therefore short-circuited for DC-signals. On some of the dipoles, small end caps are added to the dipole arms in order to improve matching when loaded according to the position as explained in the "Measurement Conditions" paragraph. The SAR data are not affected by this change. The overall dipole length is still according to the Standard.
No excessive force must be applied to the dipole arms, because they might bend or the soldered connections near the feedpoint may be damaged.

Additional EUT Data

Manufactured by	SPEAG
Manufactured on	September 26, 2013

DASY5 Validation Report for Head TSL

Date: 09.02.2016

Test Laboratory: SPEAG, Zurich, Switzerland

DUT: Dipole 2450 MHz; Type: D2450V2; Serial: D2450V2 - SN: 929

Communication System: UID 0 - CW; Frequency: 2450 MHz
Medium parameters used: f = 2450 MHz; σ = 1.84 S/m; ε_r = 38.7; ρ = 1000 kg/m^3
Phantom section: Flat Section
Measurement Standard: DASY5 (IEEE/IEC/ANSI C63.19-2011)

DASY52 Configuration:

- Probe: EX3DV4 - SN7349; ConvF(7.76, 7.76, 7.76); Calibrated: 31.12.2015;
- Sensor-Surface: 1.4mm (Mechanical Surface Detection)
- Electronics: DAE4 Sn601; Calibrated: 30.12.2015
- Phantom: Flat Phantom 5.0 (front); Type: QD000P50AA; Serial: 1001
- DASY52 52.8.8(1258); SEMCAD X 14.6.10(7372)

Dipole Calibration for Head Tissue/Pin=250 mW, d=10mm/Zoom Scan (7x7x7)/Cube 0:

Measurement grid: dx=5mm, dy=5mm, dz=5mm
Reference Value = 112.8 V/m; Power Drift = -0.01 dB
Peak SAR (extrapolated) = 26.5 W/kg
SAR(1 g) = 13 W/kg; SAR(10 g) = 6 W/kg
Maximum value of SAR (measured) = 21.3 W/kg

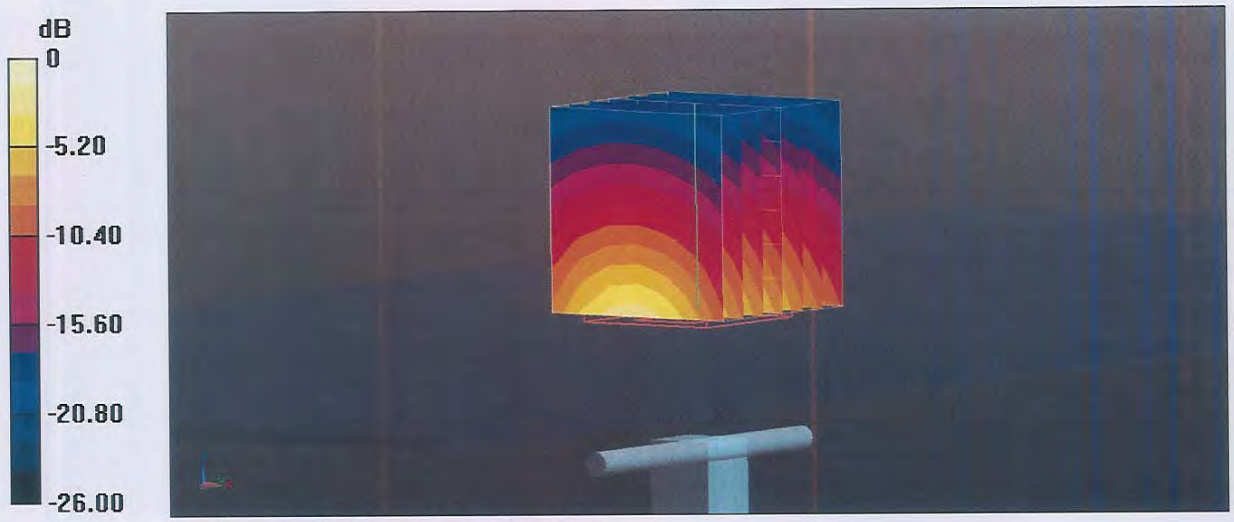

0 dB = 21.3 W/kg = 13.28 dBW/kg

Impedance Measurement Plot for Head TSL

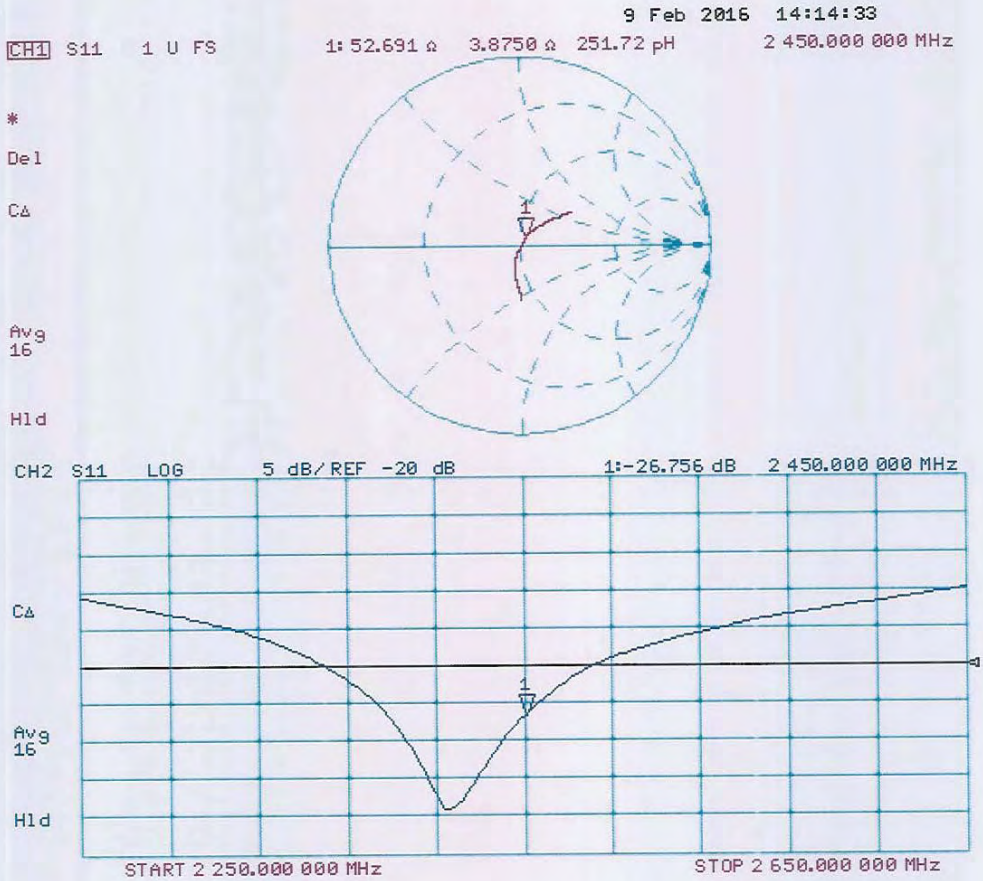

DASY5 Validation Report for Body TSL

Date: 09.02.2016

Test Laboratory: SPEAG, Zurich, Switzerland

DUT: Dipole 2450 MHz; Type: D2450V2; Serial: D2450V2 - SN: 929

Communication System: UID 0 - CW; Frequency: 2450 MHz
Medium parameters used: f = 2450 MHz; σ = 2 S/m; ε_r = 52.9; ρ = 1000 kg/m^3
Phantom section: Flat Section
Measurement Standard: DASY5 (IEEE/IEC/ANSI C63.19-2011)

DASY52 Configuration:

- Probe: EX3DV4 - SN7349; ConvF(7.79, 7.79, 7.79); Calibrated: 31.12.2015;
- Sensor-Surface: 1.4mm (Mechanical Surface Detection)
- Electronics: DAE4 Sn601; Calibrated: 30.12.2015
- Phantom: Flat Phantom 5.0 (back); Type: QD000P50AA; Serial: 1002
- DASY52 52.8.8(1258); SEMCAD X 14.6.10(7372)

Dipole Calibration for Body Tissue/Pin=250 mW, d=10mm/Zoom Scan (7x7x7)/Cube 0:

Measurement grid: dx=5mm, dy=5mm, dz=5mm
Reference Value = 105.9 V/m; Power Drift = -0.02 dB
Peak SAR (extrapolated) = 25.2 W/kg
SAR(1 g) = 12.6 W/kg; SAR(10 g) = 5.9 W/kg
Maximum value of SAR (measured) = 20.7 W/kg

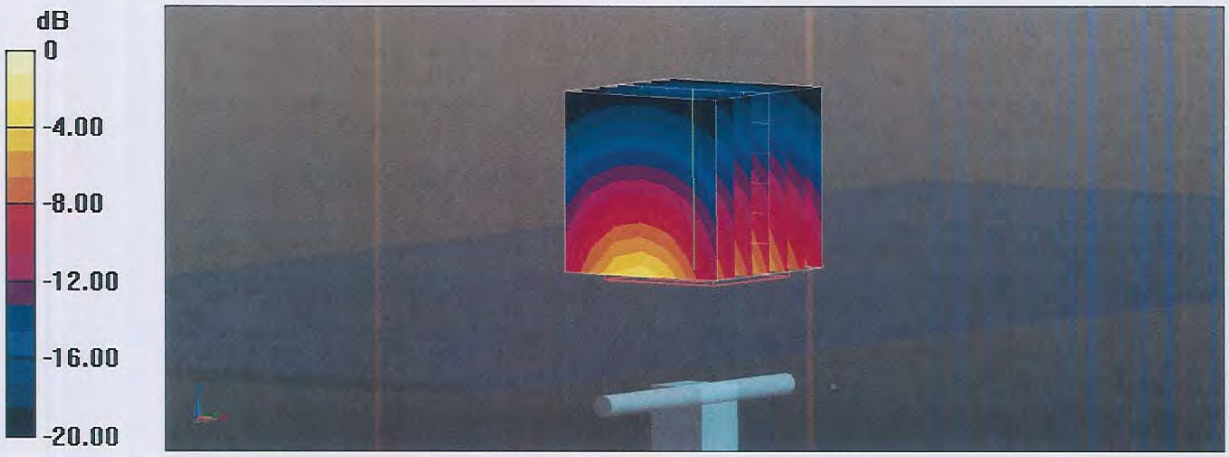

0 dB = 20.7 W/kg = 13.16 dBW/kg

Impedance Measurement Plot for Body TSL

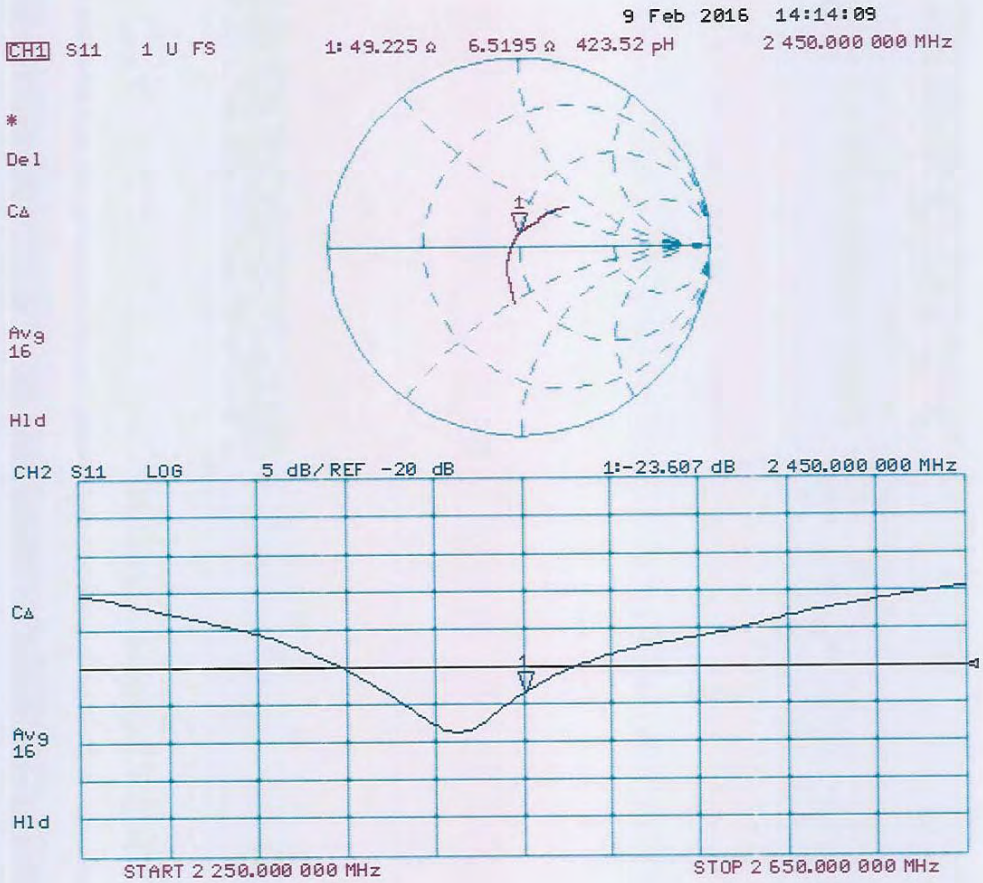

Calibration Laboratory of
Schmid & Partner
Engineering AG
Zeughausstrasse 43, 8004 Zurich, Switzerland

S Schweizerischer Kalibrierdienst
C Service suisse d'étalonnage
Servizio svizzero di taratura
S Swiss Calibration Service

Accredited by the Swiss Accreditation Service (SAS)
The Swiss Accreditation Service is one of the signatories to the EA Multilateral Agreement for the recognition of calibration certificates

Accreditation No.: SCS 0108

Client Sporton-ICC (Auden)

Certificate No: D5GHzV2-1171_Feb16

CALIBRATION CERTIFICATE

Object	D5GHzV2 - SN: 1171
Calibration procedure(s)	QA CAL-22.v2 Calibration procedure for dipole validation kits between 3-6 GHz
Calibration date:	February 17, 2016

This calibration certificate documents the traceability to national standards, which realize the physical units of measurements (SI).
The measurements and the uncertainties with confidence probability are given on the following pages and are part of the certificate.

All calibrations have been conducted in the closed laboratory facility: environment temperature (22 ± 3)°C and humidity < 70%.

Calibration Equipment used (M&TE critical for calibration)

Primary Standards	ID #	Cal Date (Certificate No.)	Scheduled Calibration
Power meter EPM-442A	GB37480704	07-Oct-15 (No. 217-02222)	Oct-16
Power sensor HP 8481A	US37292783	07-Oct-15 (No. 217-02222)	Oct-16
Power sensor HP 8481A	MY41092317	07-Oct-15 (No. 217-02223)	Oct-16
Reference 20 dB Attenuator	SN: 5058 (20k)	01-Apr-15 (No. 217-02131)	Mar-16
Type-N mismatch combination	SN: 5047.2 / 06327	01-Apr-15 (No. 217-02134)	Mar-16
Reference Probe EX3DV4	SN: 3503	31-Dec-15 (No. EX3-3503_Dec15)	Dec-16
DAE4	SN: 601	30-Dec-15 (No. DAE4-601_Dec15)	Dec-16

Secondary Standards	ID #	Check Date (in house)	Scheduled Check
RF generator R&S SMT-06	100972	15-Jun-15 (in house check Jun-15)	In house check: Jun-18
Network Analyzer HP 8753E	US37390585 S4206	18-Oct-01 (in house check Oct-15)	In house check: Oct-16

	Name	Function	Signature
Calibrated by:	Jeton Kastrati	Laboratory Technician	
Approved by:	Katja Pokovic	Technical Manager	

Issued: February 19, 2016

This calibration certificate shall not be reproduced except in full without written approval of the laboratory.

Glossary:

TSL	tissue simulating liquid
ConvF	sensitivity in TSL / NORM x,y,z
N/A	not applicable or not measured

Calibration is Performed According to the Following Standards:

a) IEEE Std 1528-2013, "IEEE Recommended Practice for Determining the Peak Spatial-Averaged Specific Absorption Rate (SAR) in the Human Head from Wireless Communications Devices: Measurement Techniques", June 2013
b) IEC 62209-2, "Procedure to determine the Specific Absorption Rate (SAR) for wireless communication devices used in close proximity to the human body (frequency range of 30 MHz to 6 GHz)", March 2010
c) KDB 865664, "SAR Measurement Requirements for 100 MHz to 6 GHz"

Additional Documentation:

d) DASY4/5 System Handbook

Methods Applied and Interpretation of Parameters:

- *Measurement Conditions:* Further details are available from the Validation Report at the end of the certificate. All figures stated in the certificate are valid at the frequency indicated.
- *Antenna Parameters with TSL:* The dipole is mounted with the spacer to position its feed point exactly below the center marking of the flat phantom section, with the arms oriented parallel to the body axis.
- *Feed Point Impedance and Return Loss:* These parameters are measured with the dipole positioned under the liquid filled phantom. The impedance stated is transformed from the measurement at the SMA connector to the feed point. The Return Loss ensures low reflected power. No uncertainty required.
- *Electrical Delay:* One-way delay between the SMA connector and the antenna feed point. No uncertainty required.
- *SAR measured:* SAR measured at the stated antenna input power.
- *SAR normalized:* SAR as measured, normalized to an input power of 1 W at the antenna connector.
- *SAR for nominal TSL parameters:* The measured TSL parameters are used to calculate the nominal SAR result.

The reported uncertainty of measurement is stated as the standard uncertainty of measurement multiplied by the coverage factor k=2, which for a normal distribution corresponds to a coverage probability of approximately 95%.

Measurement Conditions

DASY system configuration, as far as not given on page 1.

DASY Version	DASY5	V52.8.8
Extrapolation	Advanced Extrapolation	
Phantom	Modular Flat Phantom V5.0	
Distance Dipole Center - TSL	10 mm	with Spacer
Zoom Scan Resolution	dx, dy = 4.0 mm, dz = 1.4 mm	Graded Ratio = 1.4 (Z direction)
Frequency	5200 MHz ± 1 MHz 5300 MHz ± 1 MHz 5500 MHz ± 1 MHz 5600 MHz ± 1 MHz 5800 MHz ± 1 MHz	

Head TSL parameters at 5200 MHz

The following parameters and calculations were applied.

	Temperature	**Permittivity**	**Conductivity**
Nominal Head TSL parameters	22.0 °C	36.0	4.66 mho/m
Measured Head TSL parameters	(22.0 ± 0.2) °C	34.9 ± 6 %	4.52 mho/m ± 6 %
Head TSL temperature change during test	< 0.5 °C	----	----

SAR result with Head TSL at 5200 MHz

SAR averaged over 1 cm^3 (1 g) of Head TSL	Condition	
SAR measured	100 mW input power	7.42 W/kg
SAR for nominal Head TSL parameters	normalized to 1W	**73.7 W/kg ± 19.9 % (k=2)**

SAR averaged over 10 cm^3 (10 g) of Head TSL	condition	
SAR measured	100 mW input power	2.16 W/kg
SAR for nominal Head TSL parameters	normalized to 1W	**21.4 W/kg ± 19.5 % (k=2)**

Head TSL parameters at 5300 MHz

The following parameters and calculations were applied.

	Temperature	Permittivity	Conductivity
Nominal Head TSL parameters	22.0 °C	35.9	4.76 mho/m
Measured Head TSL parameters	(22.0 ± 0.2) °C	34.8 ± 6 %	4.61 mho/m ± 6 %
Head TSL temperature change during test	< 0.5 °C	----	----

SAR result with Head TSL at 5300 MHz

SAR averaged over 1 cm^3 (1 g) of Head TSL	Condition	
SAR measured	100 mW input power	7.91 W/kg
SAR for nominal Head TSL parameters	normalized to 1W	**78.5 W / kg ± 19.9 % (k=2)**

SAR averaged over 10 cm^3 (10 g) of Head TSL	condition	
SAR measured	100 mW input power	2.30 W/kg
SAR for nominal Head TSL parameters	normalized to 1W	**22.8 W/kg ± 19.5 % (k=2)**

Head TSL parameters at 5500 MHz

The following parameters and calculations were applied.

	Temperature	Permittivity	Conductivity
Nominal Head TSL parameters	22.0 °C	35.6	4.96 mho/m
Measured Head TSL parameters	(22.0 ± 0.2) °C	34.5 ± 6 %	4.81 mho/m ± 6 %
Head TSL temperature change during test	< 0.5 °C	----	----

SAR result with Head TSL at 5500 MHz

SAR averaged over 1 cm^3 (1 g) of Head TSL	Condition	
SAR measured	100 mW input power	7.74 W/kg
SAR for nominal Head TSL parameters	normalized to 1W	**76.8 W/kg ± 19.9 % (k=2)**

SAR averaged over 10 cm^3 (10 g) of Head TSL	condition	
SAR measured	100 mW input power	2.23 W/kg
SAR for nominal Head TSL parameters	normalized to 1W	**22.1 W/kg ± 19.5 % (k=2)**

Head TSL parameters at 5600 MHz

The following parameters and calculations were applied.

	Temperature	Permittivity	Conductivity
Nominal Head TSL parameters	22.0 °C	35.5	5.07 mho/m
Measured Head TSL parameters	(22.0 ± 0.2) °C	34.3 ± 6 %	4.91 mho/m ± 6 %
Head TSL temperature change during test	< 0.5 °C	----	----

SAR result with Head TSL at 5600 MHz

SAR averaged over 1 cm^3 (1 g) of Head TSL	Condition	
SAR measured	100 mW input power	8.08 W/kg
SAR for nominal Head TSL parameters	normalized to 1W	**80.1 W/kg ± 19.9 % (k=2)**

SAR averaged over 10 cm^3 (10 g) of Head TSL	condition	
SAR measured	100 mW input power	2.33 W/kg
SAR for nominal Head TSL parameters	normalized to 1W	**23.1 W/kg ± 19.5 % (k=2)**

Head TSL parameters at 5800 MHz

The following parameters and calculations were applied.

	Temperature	Permittivity	Conductivity
Nominal Head TSL parameters	22.0 °C	35.3	5.27 mho/m
Measured Head TSL parameters	(22.0 ± 0.2) °C	34.1 ± 6 %	5.12 mho/m ± 6 %
Head TSL temperature change during test	< 0.5 °C	----	----

SAR result with Head TSL at 5800 MHz

SAR averaged over 1 cm^3 (1 g) of Head TSL	Condition	
SAR measured	100 mW input power	7.58 W/kg
SAR for nominal Head TSL parameters	normalized to 1W	**75.2 W/kg ± 19.9 % (k=2)**

SAR averaged over 10 cm^3 (10 g) of Head TSL	condition	
SAR measured	100 mW input power	2.17 W/kg
SAR for nominal Head TSL parameters	normalized to 1W	**21.5 W/kg ± 19.5 % (k=2)**

Body TSL parameters at 5200 MHz

The following parameters and calculations were applied.

	Temperature	Permittivity	Conductivity
Nominal Body TSL parameters	22.0 °C	49.0	5.30 mho/m
Measured Body TSL parameters	(22.0 ± 0.2) °C	47.2 ± 6 %	5.40 mho/m ± 6 %
Body TSL temperature change during test	< 0.5 °C	----	----

SAR result with Body TSL at 5200 MHz

SAR averaged over 1 cm^3 (1 g) of Body TSL	Condition	
SAR measured	100 mW input power	7.41 W/kg
SAR for nominal Body TSL parameters	normalized to 1W	**73.6 W/kg ± 19.9 % (k=2)**

SAR averaged over 10 cm^3 (10 g) of Body TSL	condition	
SAR measured	100 mW input power	2.09 W/kg
SAR for nominal Body TSL parameters	normalized to 1W	**20.7 W/kg ± 19.5 % (k=2)**

Body TSL parameters at 5300 MHz

The following parameters and calculations were applied.

	Temperature	Permittivity	Conductivity
Nominal Body TSL parameters	22.0 °C	48.9	5.42 mho/m
Measured Body TSL parameters	(22.0 ± 0.2) °C	47.0 ± 6 %	5.53 mho/m ± 6 %
Body TSL temperature change during test	< 0.5 °C	----	----

SAR result with Body TSL at 5300 MHz

SAR averaged over 1 cm^3 (1 g) of Body TSL	Condition	
SAR measured	100 mW input power	7.69 W/kg
SAR for nominal Body TSL parameters	normalized to 1W	**76.3 W/kg ± 19.9 % (k=2)**

SAR averaged over 10 cm^3 (10 g) of Body TSL	condition	
SAR measured	100 mW input power	2.17 W/kg
SAR for nominal Body TSL parameters	normalized to 1W	**21.5 W/kg ± 19.5 % (k=2)**

Body TSL parameters at 5500 MHz

The following parameters and calculations were applied.

	Temperature	Permittivity	Conductivity
Nominal Body TSL parameters	22.0 °C	48.6	5.65 mho/m
Measured Body TSL parameters	(22.0 ± 0.2) °C	46.6 ± 6 %	5.80 mho/m ± 6 %
Body TSL temperature change during test	< 0.5 °C	----	----

SAR result with Body TSL at 5500 MHz

SAR averaged over 1 cm^3 (1 g) of Body TSL	Condition	
SAR measured	100 mW input power	7.95 W/kg
SAR for nominal Body TSL parameters	normalized to 1W	**78.9 W/kg ± 19.9 % (k=2)**

SAR averaged over 10 cm^3 (10 g) of Body TSL	condition	
SAR measured	100 mW input power	2.22 W/kg
SAR for nominal Body TSL parameters	normalized to 1W	**22.0 W/kg ± 19.5 % (k=2)**

Body TSL parameters at 5600 MHz

The following parameters and calculations were applied.

	Temperature	Permittivity	Conductivity
Nominal Body TSL parameters	22.0 °C	48.5	5.77 mho/m
Measured Body TSL parameters	(22.0 ± 0.2) °C	46.4 ± 6 %	5.94 mho/m ± 6 %
Body TSL temperature change during test	< 0.5 °C	----	----

SAR result with Body TSL at 5600 MHz

SAR averaged over 1 cm^3 (1 g) of Body TSL	Condition	
SAR measured	100 mW input power	8.04 W/kg
SAR for nominal Body TSL parameters	normalized to 1W	**79.8 W/kg ± 19.9 % (k=2)**

SAR averaged over 10 cm^3 (10 g) of Body TSL	condition	
SAR measured	100 mW input power	2.26 W/kg
SAR for nominal Body TSL parameters	normalized to 1W	**22.4 W/kg ± 19.5 % (k=2)**

Body TSL parameters at 5800 MHz

The following parameters and calculations were applied.

	Temperature	Permittivity	Conductivity
Nominal Body TSL parameters	22.0 °C	48.2	6.00 mho/m
Measured Body TSL parameters	(22.0 ± 0.2) °C	46.1 ± 6 %	6.22 mho/m ± 6 %
Body TSL temperature change during test	< 0.5 °C	----	----

SAR result with Body TSL at 5800 MHz

SAR averaged over 1 cm^3 (1 g) of Body TSL	Condition	
SAR measured	100 mW input power	7.62 W/kg
SAR for nominal Body TSL parameters	normalized to 1W	**75.6 W/kg ± 19.9 % (k=2)**

SAR averaged over 10 cm^3 (10 g) of Body TSL	condition	
SAR measured	100 mW input power	2.13 W/kg
SAR for nominal Body TSL parameters	normalized to 1W	**21.1 W/kg ± 19.5 % (k=2)**

Appendix (Additional assessments outside the scope of SCS 0108)

Antenna Parameters with Head TSL at 5200 MHz

Impedance, transformed to feed point	49.5 Ω - 10.7 jΩ
Return Loss	- 19.4 dB

Antenna Parameters with Head TSL at 5300 MHz

Impedance, transformed to feed point	49.2 Ω - 6.9 jΩ
Return Loss	- 23.1 dB

Antenna Parameters with Head TSL at 5500 MHz

Impedance, transformed to feed point	51.2 Ω - 5.8 jΩ
Return Loss	- 24.7 dB

Antenna Parameters with Head TSL at 5600 MHz

Impedance, transformed to feed point	55.5 Ω - 5.1 jΩ
Return Loss	- 23.0 dB

Antenna Parameters with Head TSL at 5800 MHz

Impedance, transformed to feed point	53.7 Ω - 6.5 jΩ
Return Loss	- 22.9 dB

Antenna Parameters with Body TSL at 5200 MHz

Impedance, transformed to feed point	48.4 Ω - 8.3 jΩ
Return Loss	- 21.4 dB

Antenna Parameters with Body TSL at 5300 MHz

Impedance, transformed to feed point	48.7 Ω - 5.8 jΩ
Return Loss	- 24.4 dB

Antenna Parameters with Body TSL at 5500 MHz

Impedance, transformed to feed point	50.4 Ω - 4.4 jΩ
Return Loss	- 27.2 dB

Antenna Parameters with Body TSL at 5600 MHz

Impedance, transformed to feed point	55.4 Ω - 2.8 jΩ
Return Loss	- 24.8 dB

Antenna Parameters with Body TSL at 5800 MHz

Impedance, transformed to feed point	54.7 Ω - 5.5 jΩ
Return Loss	- 23.2 dB

General Antenna Parameters and Design

Electrical Delay (one direction)	1.206 ns

After long term use with 100W radiated power, only a slight warming of the dipole near the feedpoint can be measured.

The dipole is made of standard semirigid coaxial cable. The center conductor of the feeding line is directly connected to the second arm of the dipole. The antenna is therefore short-circuited for DC-signals. On some of the dipoles, small end caps are added to the dipole arms in order to improve matching when loaded according to the position as explained in the "Measurement Conditions" paragraph. The SAR data are not affected by this change. The overall dipole length is still according to the Standard.
No excessive force must be applied to the dipole arms, because they might bend or the soldered connections near the feedpoint may be damaged.

Additional EUT Data

Manufactured by	SPEAG
Manufactured on	December 09, 2013

DASY5 Validation Report for Head TSL

Date: 11.02.2016

Test Laboratory: SPEAG, Zurich, Switzerland

DUT: Dipole D5GHzV2; Type: D5GHzV2; Serial: D5GHzV2 - SN:1171

Communication System: UID 0 - CW; Frequency: 5200 MHz, Frequency: 5300 MHz, Frequency: 5500 MHz, Frequency: 5600 MHz, Frequency: 5800 MHz
Medium parameters used: f = 5200 MHz; σ = 4.52 S/m; ε_r = 34.9; ρ = 1000 kg/m^3 , Medium parameters used: f = 5300 MHz; σ = 4.61 S/m; ε_r = 34.8; ρ = 1000 kg/m^3 , Medium parameters used: f = 5500 MHz; σ = 4.81 S/m; ε_r = 34.5; ρ = 1000 kg/m^3 , Medium parameters used: f = 5600 MHz; σ = 4.91 S/m; ε_r = 34.3; ρ = 1000 kg/m^3 , Medium parameters used: f = 5800 MHz; σ = 5.12 S/m; ε_r = 34.1; ρ = 1000 kg/m^3
Phantom section: Flat Section
Measurement Standard: DASY5 (IEEE/IEC/ANSI C63.19-2011)

DASY52 Configuration:

- Probe: EX3DV4 - SN3503; ConvF(5.59, 5.59, 5.59); Calibrated: 31.12.2015, ConvF(5.25, 5.25, 5.25); Calibrated: 31.12.2015, ConvF(5.18, 5.18, 5.18); Calibrated: 31.12.2015, ConvF(4.99, 4.99, 4.99); Calibrated: 31.12.2015, ConvF(4.95, 4.95, 4.95); Calibrated: 31.12.2015;
- Sensor-Surface: 1.4mm (Mechanical Surface Detection)
- Electronics: DAE4 Sn601; Calibrated: 30.12.2015
- Phantom: Flat Phantom 5.0 (front); Type: QD000P50AA; Serial: 1001
- DASY52 52.8.8(1258); SEMCAD X 14.6.10(7372)

Dipole Calibration for Head Tissue/Pin=100mW, dist=10mm, f=5200 MHz/Zoom Scan, dist=1.4mm (8x8x7)/Cube 0: Measurement grid: dx=4mm, dy=4mm, dz=1.4mm
Reference Value = 70.14 V/m; Power Drift = 0.07 dB
Peak SAR (extrapolated) = 26.9 W/kg
SAR(1 g) = 7.42 W/kg; SAR(10 g) = 2.16 W/kg
Maximum value of SAR (measured) = 17.0 W/kg

Dipole Calibration for Head Tissue/Pin=100mW, dist=10mm, f=5300 MHz/Zoom Scan, dist=1.4mm (8x8x7)/Cube 0: Measurement grid: dx=4mm, dy=4mm, dz=1.4mm
Reference Value = 71.75 V/m; Power Drift = 0.05 dB
Peak SAR (extrapolated) = 29.8 W/kg
SAR(1 g) = 7.91 W/kg; SAR(10 g) = 2.3 W/kg
Maximum value of SAR (measured) = 18.4 W/kg

Dipole Calibration for Head Tissue/Pin=100mW, dist=10mm, f=5500 MHz/Zoom Scan, dist=1.4mm (8x8x7)/Cube 0: Measurement grid: dx=4mm, dy=4mm, dz=1.4mm
Reference Value = 70.33 V/m; Power Drift = 0.00 dB
Peak SAR (extrapolated) = 30.3 W/kg
SAR(1 g) = 7.74 W/kg; SAR(10 g) = 2.23 W/kg
Maximum value of SAR (measured) = 18.2 W/kg

Dipole Calibration for Head Tissue/Pin=100mW, dist=10mm, f=5600 MHz/Zoom Scan, dist=1.4mm (8x8x7)/Cube 0: Measurement grid: dx=4mm, dy=4mm, dz=1.4mm
Reference Value = 71.19 V/m; Power Drift = 0.05 dB
Peak SAR (extrapolated) = 32.0 W/kg
SAR(1 g) = 8.08 W/kg; SAR(10 g) = 2.33 W/kg
Maximum value of SAR (measured) = 19.2 W/kg

Dipole Calibration for Head Tissue/Pin=100mW, dist=10mm, f=5800 MHz/Zoom Scan, dist=1.4mm (8x8x7)/Cube 0: Measurement grid: dx=4mm, dy=4mm, dz=1.4mm
Reference Value = 68.67 V/m; Power Drift = 0.04 dB
Peak SAR (extrapolated) = 31.3 W/kg
SAR(1 g) = 7.58 W/kg; SAR(10 g) = 2.17 W/kg
Maximum value of SAR (measured) = 18.3 W/kg

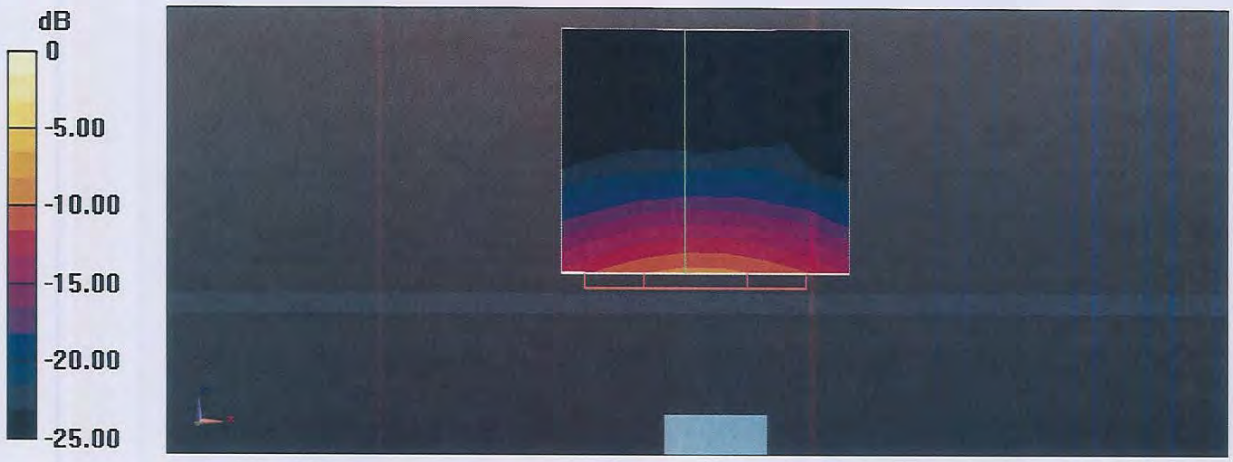

0 dB = 18.3 W/kg = 12.62 dBW/kg

Impedance Measurement Plot for Head TSL

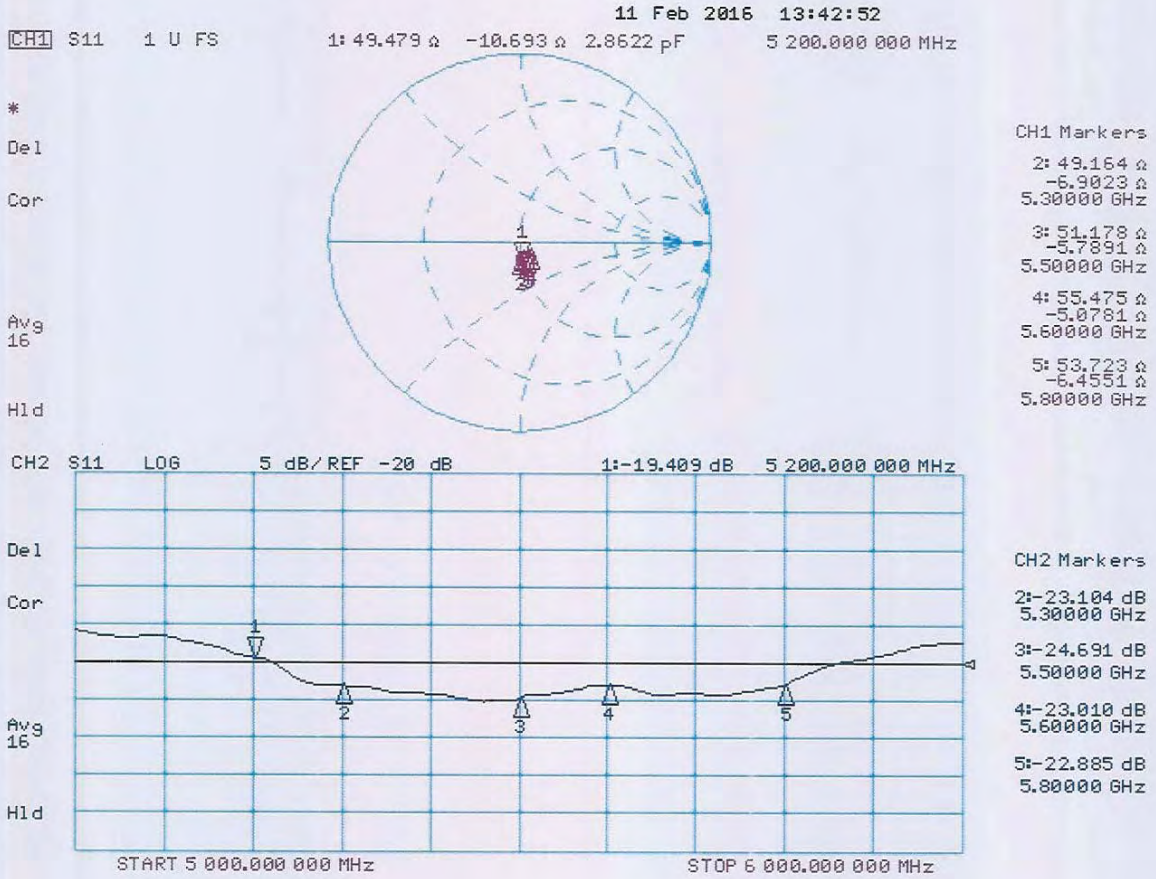

DASY5 Validation Report for Body TSL

Date: 17.02.2016

Test Laboratory: SPEAG, Zurich, Switzerland

DUT: Dipole 5GHz; Type: D5GHzV2; Serial: D5GHzV2 - SN: 1171

Communication System: UID 0 - CW; Frequency: 5200 MHz, Frequency: 5300 MHz, Frequency: 5500 MHz, Frequency: 5600 MHz, Frequency: 5800 MHz
Medium parameters used: f = 5200 MHz; σ = 5.4 S/m; ε_r = 47.2; ρ = 1000 kg/m^3 , Medium parameters used: f = 5300 MHz; σ = 5.53 S/m; ε_r = 47; ρ = 1000 kg/m^3 , Medium parameters used: f = 5500 MHz; σ = 5.8 S/m; ε_r = 46.6; ρ = 1000 kg/m^3 , Medium parameters used: f = 5600 MHz; σ = 5.94 S/m; ε_r = 46.4; ρ = 1000 kg/m^3 , Medium parameters used: f = 5800 MHz; σ = 6.22 S/m; ε_r = 46.1; ρ = 1000 kg/m^3
Phantom section: Flat Section
Measurement Standard: DASY5 (IEEE/IEC/ANSI C63.19-2011)

DASY52 Configuration:

- Probe: EX3DV4 - SN3503; ConvF(4.99, 4.99, 4.99); Calibrated: 31.12.2015, ConvF(4.75, 4.75, 4.75); Calibrated: 31.12.2015, ConvF(4.4, 4.4, 4.4); Calibrated: 31.12.2015, ConvF(4.35, 4.35, 4.35); Calibrated: 31.12.2015, ConvF(4.27, 4.27, 4.27); Calibrated: 31.12.2015;
- Sensor-Surface: 1.4mm (Mechanical Surface Detection)
- Electronics: DAE4 Sn601; Calibrated: 30.12.2015
- Phantom: Flat Phantom 5.0 (back); Type: QD000P50AA; Serial: 1002
- DASY52 52.8.8(1258); SEMCAD X 14.6.10(7372)

Dipole Calibration for Body Tissue/Pin=100mW, dist=10mm, f=5200 MHz/Zoom Scan, dist=1.4mm (8x8x7)/Cube 0: Measurement grid: dx=4mm, dy=4mm, dz=1.4mm
Reference Value = 66.49 V/m; Power Drift = -0.03 dB
Peak SAR (extrapolated) = 27.3 W/kg
SAR(1 g) = 7.41 W/kg; SAR(10 g) = 2.09 W/kg
Maximum value of SAR (measured) = 16.7 W/kg

Dipole Calibration for Body Tissue/Pin=100mW, dist=10mm, f=5300 MHz/Zoom Scan, dist=1.4mm (8x8x7)/Cube 0: Measurement grid: dx=4mm, dy=4mm, dz=1.4mm
Reference Value = 67.24 V/m; Power Drift = -0.00 dB
Peak SAR (extrapolated) = 29.1 W/kg
SAR(1 g) = 7.69 W/kg; SAR(10 g) = 2.17 W/kg
Maximum value of SAR (measured) = 17.6 W/kg

Dipole Calibration for Body Tissue/Pin=100mW, dist=10mm, f=5500 MHz/Zoom Scan, dist=1.4mm (8x8x7)/Cube 0: Measurement grid: dx=4mm, dy=4mm, dz=1.4mm
Reference Value = 67.55 V/m; Power Drift = -0.03 dB
Peak SAR (extrapolated) = 32.0 W/kg
SAR(1 g) = 7.95 W/kg; SAR(10 g) = 2.22 W/kg
Maximum value of SAR (measured) = 18.7 W/kg

Dipole Calibration for Body Tissue/Pin=100mW, dist=10mm, f=5600 MHz/Zoom Scan, dist=1.4mm (8x8x7)/Cube 0: Measurement grid: dx=4mm, dy=4mm, dz=1.4mm
Reference Value = 67.31 V/m; Power Drift = -0.00 dB
Peak SAR (extrapolated) = 32.8 W/kg
SAR(1 g) = 8.04 W/kg; SAR(10 g) = 2.26 W/kg
Maximum value of SAR (measured) = 18.9 W/kg

Dipole Calibration for Body Tissue/Pin=100mW, dist=10mm, f=5800 MHz/Zoom Scan, dist=1.4mm (8x8x7)/Cube 0: Measurement grid: dx=4mm, dy=4mm, dz=1.4mm
Reference Value = 65.02 V/m; Power Drift = 0.01 dB
Peak SAR (extrapolated) = 32.8 W/kg
SAR(1 g) = 7.62 W/kg; SAR(10 g) = 2.13 W/kg
Maximum value of SAR (measured) = 18.3 W/kg

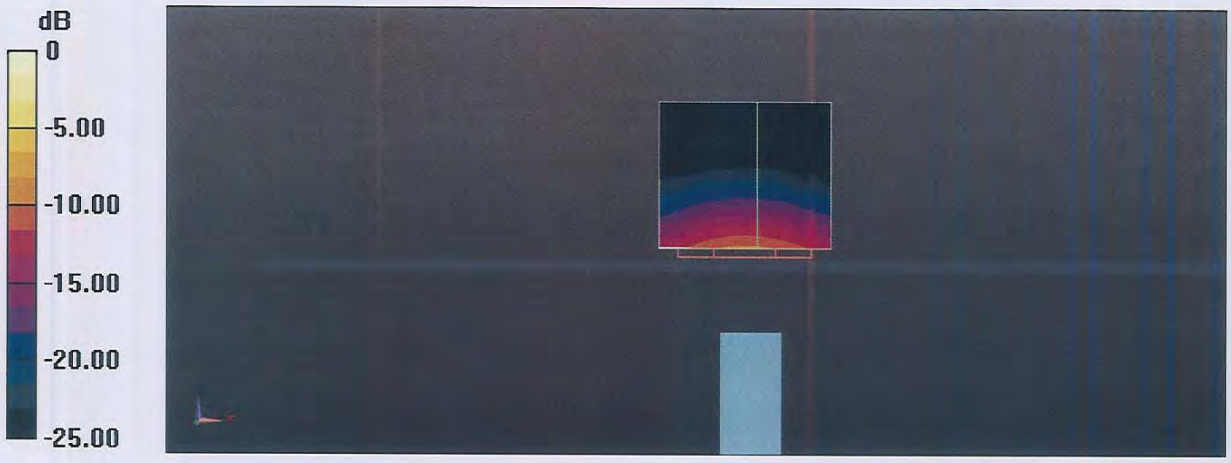

0 dB = 16.7 W/kg = 12.23 dBW/kg

Impedance Measurement Plot for Body TSL

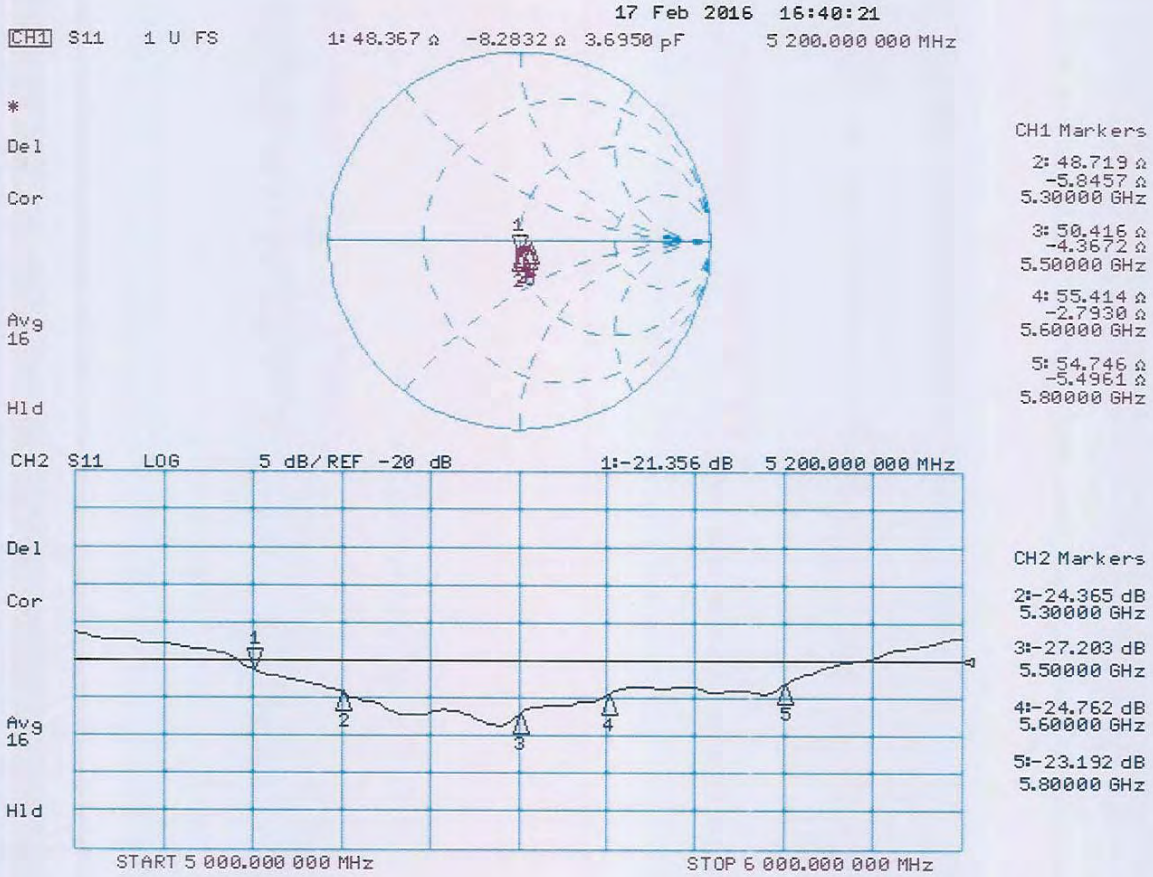

Calibration Laboratory of
Schmid & Partner
Engineering AG
Zeughausstrasse 43, 8004 Zurich, Switzerland

S Schweizerischer Kalibrierdienst
C Service suisse d'étalonnage
Servizio svizzero di taratura
S Swiss Calibration Service

Accredited by the Swiss Accreditation Service (SAS)
The Swiss Accreditation Service is one of the signatories to the EA Multilateral Agreement for the recognition of calibration certificates

Accreditation No.: SCS 0108

Client Sporton-ICC (Auden)

Certificate No: EX3-3976_Feb16

CALIBRATION CERTIFICATE

Object	EX3DV4 - SN:3976
Calibration procedure(s)	QA CAL-01.v9, QA CAL-14.v4, QA CAL-23.v5, QA CAL-25.v6 Calibration procedure for dosimetric E-field probes
Calibration date:	February 22, 2016

This calibration certificate documents the traceability to national standards, which realize the physical units of measurements (SI).
The measurements and the uncertainties with confidence probability are given on the following pages and are part of the certificate.

All calibrations have been conducted in the closed laboratory facility: environment temperature (22 ± 3)°C and humidity < 70%.

Calibration Equipment used (M&TE critical for calibration)

Primary Standards	ID	Cal Date (Certificate No.)	Scheduled Calibration
Power meter E4419B	GB41293874	01-Apr-15 (No. 217-02128)	Mar-16
Power sensor E4412A	MY41498087	01-Apr-15 (No. 217-02128)	Mar-16
Reference 3 dB Attenuator	SN: S5054 (3c)	01-Apr-15 (No. 217-02129)	Mar-16
Reference 20 dB Attenuator	SN: S5277 (20x)	01-Apr-15 (No. 217-02132)	Mar-16
Reference 30 dB Attenuator	SN: S5129 (30b)	01-Apr-15 (No. 217-02133)	Mar-16
Reference Probe ES3DV2	SN: 3013	31-Dec-15 (No. ES3-3013_Dec15)	Dec-16
DAE4	SN: 660	23-Dec-15 (No. DAE4-660_Dec15)	Dec-16
Secondary Standards	ID	Check Date (in house)	Scheduled Check
RF generator HP 8648C	US3642U01700	4-Aug-99 (in house check Apr-13)	In house check: Apr-16
Network Analyzer HP 8753E	US37390585	18-Oct-01 (in house check Oct-15)	In house check: Oct-16

	Name	Function	Signature
Calibrated by:	Jeton Kastrati	Laboratory Technician	
Approved by:	Katja Pokovic	Technical Manager	

Issued: February 22, 2016

This calibration certificate shall not be reproduced except in full without written approval of the laboratory.

Glossary:

TSL	tissue simulating liquid
NORMx,y,z	sensitivity in free space
ConvF	sensitivity in TSL / NORMx,y,z
DCP	diode compression point
CF	crest factor (1/duty_cycle) of the RF signal
A, B, C, D	modulation dependent linearization parameters
Polarization φ	φ rotation around probe axis
Polarization ϑ	ϑ rotation around an axis that is in the plane normal to probe axis (at measurement center), i.e., ϑ = 0 is normal to probe axis
Connector Angle	information used in DASY system to align probe sensor X to the robot coordinate system

Calibration is Performed According to the Following Standards:

a) IEEE Std 1528-2013, "IEEE Recommended Practice for Determining the Peak Spatial-Averaged Specific Absorption Rate (SAR) in the Human Head from Wireless Communications Devices: Measurement Techniques", June 2013
b) IEC 62209-1, "Procedure to measure the Specific Absorption Rate (SAR) for hand-held devices used in close proximity to the ear (frequency range of 300 MHz to 3 GHz)", February 2005
c) IEC 62209-2, "Procedure to determine the Specific Absorption Rate (SAR) for wireless communication devices used in close proximity to the human body (frequency range of 30 MHz to 6 GHz)", March 2010
d) KDB 865664, "SAR Measurement Requirements for 100 MHz to 6 GHz"

Methods Applied and Interpretation of Parameters:

- *NORMx,y,z:* Assessed for E-field polarization ϑ = 0 (f ≤ 900 MHz in TEM-cell; f > 1800 MHz: R22 waveguide). NORMx,y,z are only intermediate values, i.e., the uncertainties of NORMx,y,z does not affect the E^2-field uncertainty inside TSL (see below *ConvF*).
- *NORM(f)x,y,z = NORMx,y,z * frequency_response* (see Frequency Response Chart). This linearization is implemented in DASY4 software versions later than 4.2. The uncertainty of the frequency response is included in the stated uncertainty of *ConvF*.
- *DCPx,y,z:* DCP are numerical linearization parameters assessed based on the data of power sweep with CW signal (no uncertainty required). DCP does not depend on frequency nor media.
- *PAR:* PAR is the Peak to Average Ratio that is not calibrated but determined based on the signal characteristics
- *Ax,y,z; Bx,y,z; Cx,y,z; Dx,y,z; VRx,y,z: A, B, C, D* are numerical linearization parameters assessed based on the data of power sweep for specific modulation signal. The parameters do not depend on frequency nor media. *VR* is the maximum calibration range expressed in RMS voltage across the diode.
- *ConvF and Boundary Effect Parameters:* Assessed in flat phantom using E-field (or Temperature Transfer Standard for f ≤ 800 MHz) and inside waveguide using analytical field distributions based on power measurements for f > 800 MHz. The same setups are used for assessment of the parameters applied for boundary compensation (alpha, depth) of which typical uncertainty values are given. These parameters are used in DASY4 software to improve probe accuracy close to the boundary. The sensitivity in TSL corresponds to *NORMx,y,z * ConvF* whereby the uncertainty corresponds to that given for *ConvF*. A frequency dependent *ConvF* is used in DASY version 4.4 and higher which allows extending the validity from ± 50 MHz to ± 100 MHz.
- *Spherical isotropy (3D deviation from isotropy)*: in a field of low gradients realized using a flat phantom exposed by a patch antenna.
- *Sensor Offset*: The sensor offset corresponds to the offset of virtual measurement center from the probe tip (on probe axis). No tolerance required.
- *Connector Angle*: The angle is assessed using the information gained by determining the *NORMx* (no uncertainty required).