BiTrend™ EssentialSeriesWi-Fi Module Datasheet

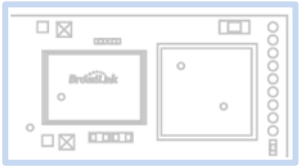

WT1SBSL

Hangzhou Gubei Electronics Technology Co., Ltd.

Copyright Information

The information contained in this document is the proprietary information of Hangzhou Gubei Electronics Technology Co., Ltd. (hereinafter referred as BroadLink). Further, no portion of this document may be altered or edited in any form or by any meanswithout the prior written consent of BroadLink, the copyrightholder.

Further BroadLink reserves the right to make modifications, additions anddeletions to this document due to typographical errors, inaccurate information, orimprovements to products mentioned in the document at any time and without notice. Such changes will, nevertheless be incorporated into new editions of this document or published as errata sheet.

Version History

V 1.0.0 22/01/2016 1st issue of preliminary document

Table of Contents

1. Introduction 3
    1.1 Overview 3
    1.2 Applications 4
    1.3 Key Features 4
2. Product Overview 5
    2.1 Product Picture 5
3. Electrical Characteristics 6
    3.1 Absolute Maximum Ratings – Voltage & Current 6
    3.2Current consumption 7
    3.3 Absolute maximum ratings – Temperature 7
    3.4Absolute maximum ratings – ESD 7
4. RF Characteristics 8
    4.1Basic Characteristics 8
    4.2 IEEE802.11b Mode 8
    4.3 IEEE802.11g Mode 9
    4.4 IEEE802.11n 20Mhz Bandwidth Mode 10
    4.5 IEEE802.11n 40Mhz Bandwidth Mode 11
5. Mechanical Characteristics 12
6. Module Interfaces 13
    6.1 PIN Layout 13
    6.2 PIN Definitions 14
7. Reference Design 15
    8.1 Antenna Selection 16
    8.2 Minimizing Radio Interference 17
    8.3 Specification of On-Board Antenna 18
Appendix A Glossary（Quentin respible） 19
Appendix B Reference paper（Quentin respible） 21
Contact Us 22

1. Introduction

1.1 Overview

BiTrend™ Essentialis the industrial leading 2.4Ghz 802.11 b/g/n embedded Wi-Fi module which delivers unmatched performance and codeless development in a compact package, providing a quick, easy and cost effective way for developers and manufacturers to add Wi-Fi connectivity for home automation, lighting control, energy efficiency and other IOT applications.

BiTrend™ Essential family combines a 2.4Ghz 802.11 b/g/n radio transceiver with a 32-bit microprocessor and embedded with MAC, baseband processing and optimized Wi-Fi network stack. It is an ideal solution for developers and manufacturers with limited RF and embedded programming expertise as it significantly reduces RF design time and removes the burden of testing and certification.

Benefitted from BroadLink's turn-key solution, BiTrend™ Essential is an ideal solution for developers with limited Wi-Fi or RF expertise or for those seeking faster time to market. It reduces RF design time and removes the burden of testing and certification. BiTrend™ Essential is fully compliant with IEEE 802.11 b/g/n standard and certified with CE, FCC and RoHS.

BiTrend™ Essential is a highly integrated Wi-Fi SoC(system on Chip) single chip, which supportsIEEE802.11b/g/n single stream, providing GPIO for intelligent control, and UART interfaces for device communication.

BiTrend™ Essential has 8Mbits flash and integrates power amplifier, low noise amplifier, and RF switch to reduce the module size and RF design capability required. And also integrate power manage unit for single 3.3V power source for cost effective design.

BiTrend™ Essential embedded 32-bit RISC MCU for 802.11b/g/n drivers, supplicant, TCP/IP protocol stack, and networking applications, can be operated in station mode and softAP mode. The WT1SBSL is an ideal solution for embedded device to enable networking service with minimized design effort.

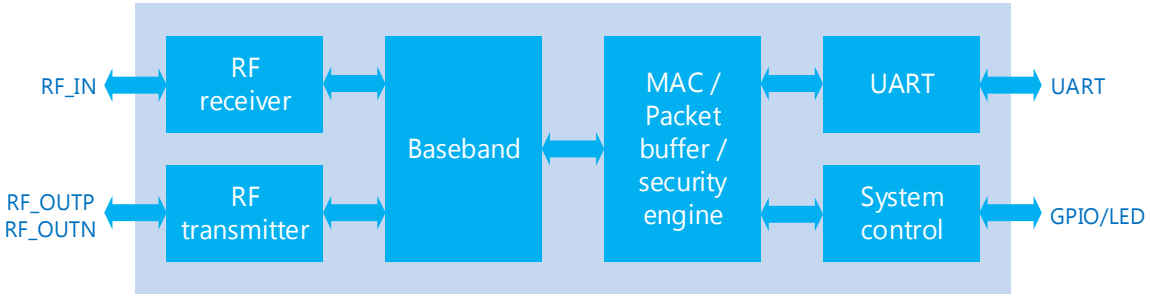

Figure 1. WT1SBSL block diagram

1.2 Applications

- Smart home appliances
- Remote Control
- Medical/Health Care
- Network consumer devices

1.3 Key Features

a. Support IEEE802.11b/g/n

Frequency Range	2.412 GHz - 2. 462GHz
Wi-Fi Standard	IEEE 802.11 b/g/n
Transmitter Power	802.11b:17dBm±0.5 802.11g:18dBm±0.5 802.11n:16dBm±0.5
MIN Receiver Sensitivity	802.11b<-78dBm 802.11g<-68dBm 802.11n<-66dBm
Data rate	11M@802.11b, 54M@802.11g, MCS7@802.11n
Security	Encryption Standard：WEP/WEPA/WPA2 EncryptionAlgorithm：WEP64/WEP128/TKIP/AES
Wi-Fi Modes	STA/AP

b. Support UARTtransparent transfer
c. Support STA\AP
d. Patent SmartConfig™ technology
e. Support IPv4, TCP/UDP/ DNS/DHCP
f. PCB printed antenna

Antenna type	PCB printed ANT

g. Power source: 3.3V
h. Peripherals:
   1*UART
   5*GPIO
   1*RESET
i. Dimension 31mm*17.7mm*3.6mm
j. ESD: 2KV
k. Absolute maximum ratings

Symbol	Description	Min.	Max.	Units
Ts	Storage temperature	-40	125	℃
TAMBIENT	Ambient Temperature	-10	70	℃
Vdd	Supply voltage	0	3.63	V
Vio	Voltage on IO pin	-0.28	3.63	V
VESD	HBM(human body model)		2000	V

2. Product Overview

2.1 Product Picture

3. Electrical Characteristics

3.1 Absolute Maximum Ratings – Voltage & Current

Using products above the absolute maximum ratings may cause permanent damage to the device. These are maximum ratings only and functional operation of the device at these conditions is not implied. Exposure to maximum rating conditions for extended periods may affect the reliability of the device.

Symbol	Rating	MIN	TYP	MAX	Unit
VDD33	3.3V Supply Voltage	2.97	3.3	3.63	V

Symbol	Ratings	Max	Unit
I_{VDD}	Total current into VDD power lines (source)	90	mA
I_{VSS}	Total current out of VSS ground lines (sink)	90	
I_{IO}	Output current sunk by any I/O and control pin	10	
	Output current source by any I/Os and control pin	10	

3.2Current consumption

Symbol	Condition	Performance	
		TYP	Unit
I_{RF}	IDLE mode	80	mA
I_{RF}	RX Active, HT40, MCS7	151	mA
I_{RF}	TX HT40, MCS7 @ 15dBm（pulse）	210	mA
I_{RF}	TX CCK 11Mbps @ 18dBm（pulse）	250	mA

Note: All result is measured at the antenna port and VDD33 is 3.3V

3.3 Absolute maximum ratings – Temperature

Symbol	Rati	Max	Unit
T_{STG}	Storagetemperature	–40 to+125	℃
T_A	Workingtemperature	-10 to+70	℃
Humidity	Non condensing, relative humidity	90%（RH）	

3.4Absolute maximum ratings – ESD

Symbol	Ratings	Conditions	Class	Max	Unit
V_{ESD}(HBM)	Electrostatic discharge voltage (human body model)	TA = +25 °C conforming to JESD22-A114	2	2000	V

4. RF Characteristics

4.1Basic Characteristics

Item	Specification
OperatingFrequency	2.412 GHz - 2.462 GHz
Wi-FiStandard	IEEE 802.11b/g/n
ModulationType	11b: DBPSK, DQPSK,CCK for DSSS 11g: BPSK, QPSK, 16QAM, 64QAM for OFDM 11n: MCS0~7,OFDM
Data Rates	
Antennatype	PCBprintedANT

4.2 IEEE802.11b Mode

Item	Specification
ModulationType	DSSS/CCK
Frequencyrange	2412MHz~2462MHz
Channel	CH1 toCH11
Datarate	1,2,5.5,11Mbps

TX Characteristics	Min	Typical	Max.	Unit
Transmitter Output Power				
11bTarget Power		17		dBm
Frequency Error	-20		+20	ppm
Constellation Error(peak EVM)@ target power				
1~11Mbps		-17	-10	

RX Characteristics	Min	Typical	Max.	Unit
Minimum Input Level Sensitivity				
1Mbps (FER≦8%)		95	-83	dBm

2Mbps (FER≦8%)	-20	-93	-80	dBm
5.5Mbps (FER≦8%)		-91	-79	dBm
11Mbps (FER≦8%)		-89	-76	dBm
Maximum Input Level (FER≦8%)	-10			dBm

4.3 IEEE802.11g Mode

Item	Specification
ModulationType	OFDM
Frequencyrange	2412MHz~2462MHz
Channel	CH1 toCH11
Datarate	6,9,12,18,24,36,48,54Mbps

TX Characteristics	Min	Typical	Max.	Unit
Transmitter Output Power				
11gTarget Power		18		dBm
Frequency Error	-20		+20	ppm
Constellation Error(peak EVM)@ target power				
6Mbps			-5	dB
9Mbps			-8	dB
12Mbps			-10	dB
18Mbps			-13	dB
24Mbps			-16	dB
36Mbps			-19	dB
48Mbp			-22	dB
54Mbps			-25	dB
Transmit spectrum mask				
@11MHz			20	dBr
@20MHz			-28	dBr
@30MHz			-40	dBr

RX Characteristics	Min	Typical	Max.	Unit
Minimum Input Level Sensitivity				
6Mbps		-90	-83	dBm

9Mbps	-	-88	-80	dBm
12Mbps		-86	-79	dBm
18Mbps		-85	-76	dBm
24Mbps		-82		dBm
36Mbps		-79		dBm
48Mbps		-75		dBm
54Mbps		-72		dBm
Maximum Input Level (FER≦10%)	-20			dBm

4.4 IEEE802.11n 20Mhz Bandwidth Mode

Item	Specification
ModulationType	OFDM
Frequencyrange	2412MHz~2462MHz
Channel	CH1 toCH11
Datarate	MCS0/1/2/3/4/5/6/7

TX Characteristics	Min	Typical	Max.	Unit
Transmitter Output Power				
11n HT20 Target Power		16		dBm
Frequency Error	-20		+20	ppm
Constellation Error(peak EVM)@ target power				
MCS0			-5	dB
MCS1			-10	dB
MCS2			-13	dB
MCS3			-16	dB
MCS4			-19	dB
MCS5			-22	dB
MCS6			-25	dB
MCS7			-28	dB
Transmit spectrum mask				
@11MHz			-20	dBr
@20MHz			-28	dBr
@30MHz			-40	dBr

RX Characteristics	Min	Typical	Max.	Unit
Minimum Input Level Sensitivity				
MCS0		-89		dBm
MCS1	-	-86		dBm
MCS2		-84		dBm
MCS3		-82		dBm
MCS4		-78		dBm
MCS5		-74		dBm
MCS6		-72		dBm
MCS7		-69		dBm
Maximum Input Level (FER≦10%)	-30			dBm

4.5 IEEE802.11n 40Mhz Bandwidth Mode

Item	Specification
ModulationType	OFDM
Frequencyrange	2422MHz~2452MHz
Channel	CH3 toCH9
Datarate	MCS0/1/2/3/4/5/6/7

TX Characteristics	Min	Typical	Max.	Unit
Transmitter Output Power				
11n HT40 Target Power		16		dBm
Frequency Error	-20		+20	ppm
Constellation Error(peak EVM)@ target power				
MCS0			-5	dB
MCS1			-10	dB
MCS2			-13	dB
MCS3			-16	dB
MCS4			-19	dB
MCS5			-22	dB
MCS6			-25	dB

MCS7			-28	dB
Transmit spectrum mask				
@11MHz			-20	dBr
@20MHz			-28	dBr
@30MHz			-40	dBr

RX Characteristics	Min	Typical	Max.	Unit
Minimum Input Level Sensitivity				
MCS0		-86		dBm
MCS1	-	-83		dBm
MCS2		-81		dBm
MCS3		-79		dBm
MCS4		-75		dBm
MCS5		-71		dBm
MCS6		-69		dBm
MCS7		-66		dBm
Maximum Input Level (FER≦10%)	-30			dBm

5. Mechanical Characteristics

Figure2.WT1SBSLtopview(Metricunits)

Figure3. 3301-WT1SBSLtopview(Metricunits)

6. Module Interfaces

6.1 PIN Layout

WT1SBSL has one group of pins2X7. The layout of PINs are shown in the figure below.

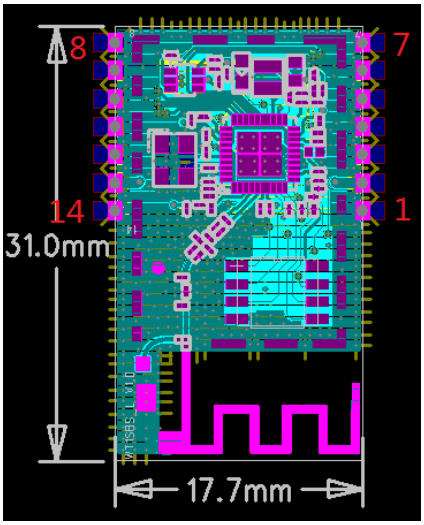

Figure6.WT1SBSLpin-out

6.2 PIN Definitions

PIN Assignment

PIN	PIN NAME	NOTE
Pin1	GND	
Pin2	VCC	3.3V
Pin3	RST_N	Module software reset,Available at low level
Pin4	UART_TX	UART Only for Passthrough
Pin5	UART_RX	
Pin6	GPIO3	
Pin7	GPIO4	Feed watchdog
Pin8	GPIO4	Feed watchdog
Pin9	GPIO3	
Pin10	GPIO2	
Pin11	GPIO1	Module software reset, Available at High level
Pin12	GPIO0	Usually use as Wi-Fi LED
Pin13	VCC	3.3V
Pin14	GND	

Type:

7. Reference Design

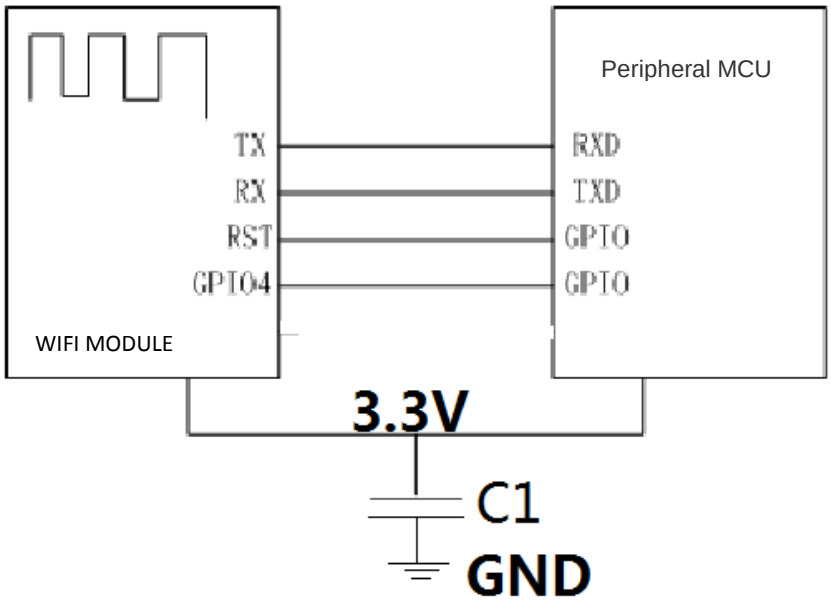

In addition to the standard serial port，the peripheral MCU also need to provide two GPIO pins to connect with the GPIO4 pin and the RST pin of the WIFI module respectively,when the WIFI module works properly,the GPIO4 pin will keep outputting message of dog feeding,if the peripheral MCU did not receive the message,the module will reset and restart through pulling down the RST pin by the other GPIO pin.

If the peripheral MCU uses power source of 5V,it needs to add a level switching circuit in the connection of the serial port and the related circuit.

The module needs a large current about 250mA when transmitting data,please ensure that the power source can provide sufficient current.

8. AntennaCharacteristics

8.1 Antenna Selection

The WT1SBSL supports on-board PCB printed antenna.When the Operating Frequencyis between 2.4G~2.5GHz, S11 of antenna port is less than-10dB and peak gainis 1.46dBi.

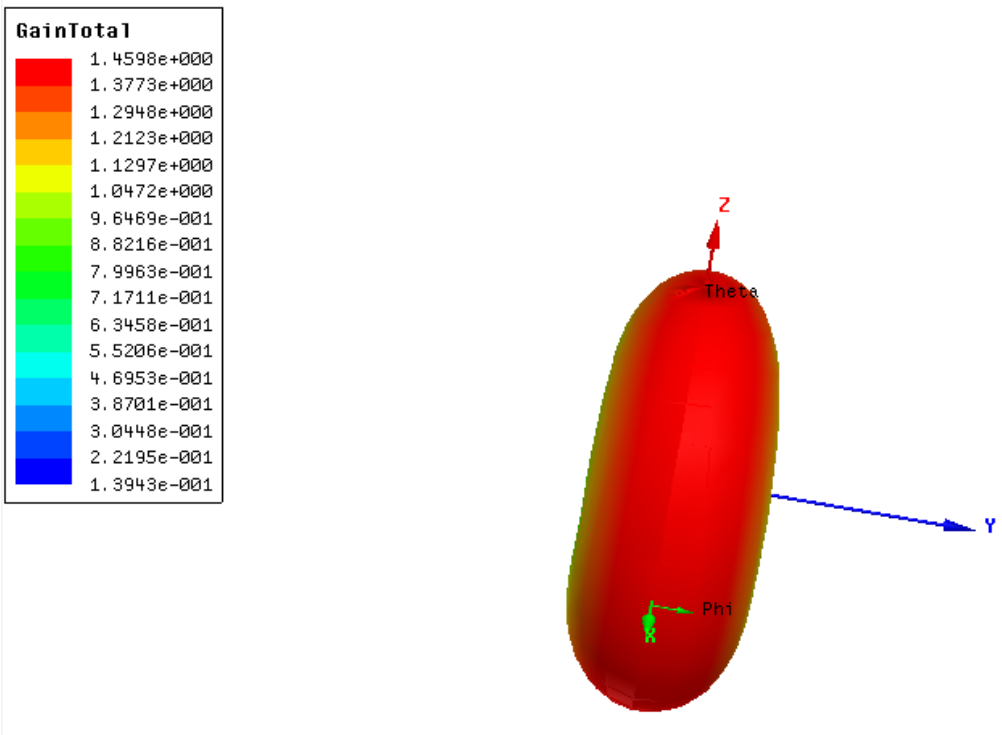

Figure 7. Antenna radiation pattern simulation

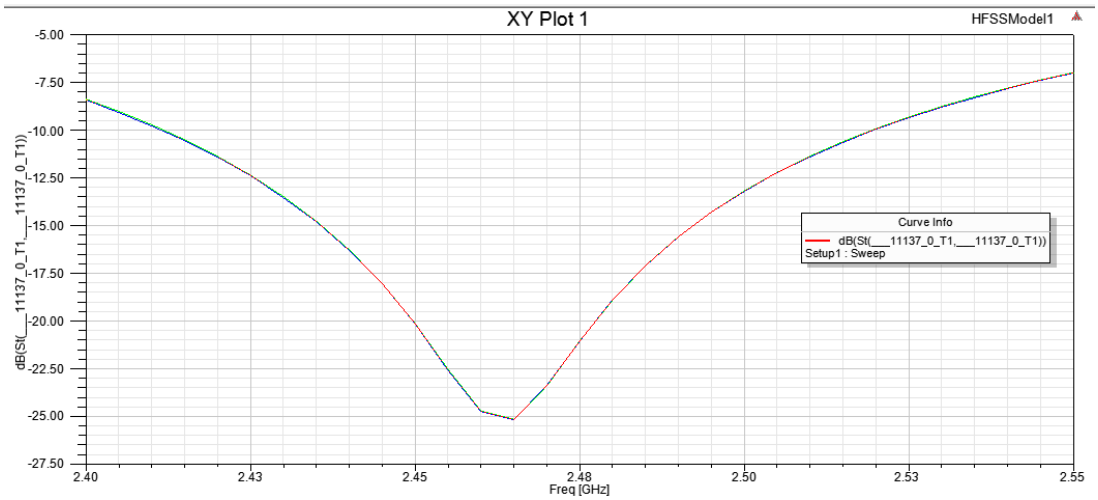

Figure 8. Antenna port S11simulation curve

In practical use, WT1SBSL is welded on user's boardand value of S11 has some changes.

8.2 Minimizing Radio Interference

When integrating the Wi-Fi module with on board PCB printed antenna, make sure the three points below:

1. The area under the antenna end of the module should be keep clear of metallic components, connectors, vias, traces and other materials that can interfere with the radio signal.

2. The area around the antenna end the module protrudes at least 10mm from the mother board PCB and any metal enclosure.

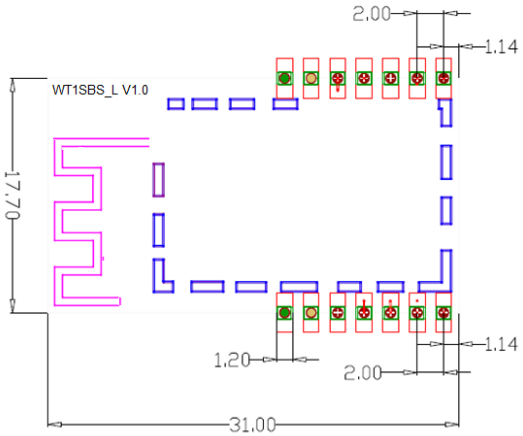

3. When planning PCB layout, it is recommended that user places the antenna of Wi-Fi module as close as possible to the edge of boarder to ensure the good performance of antenna, which is shown in the picture below.

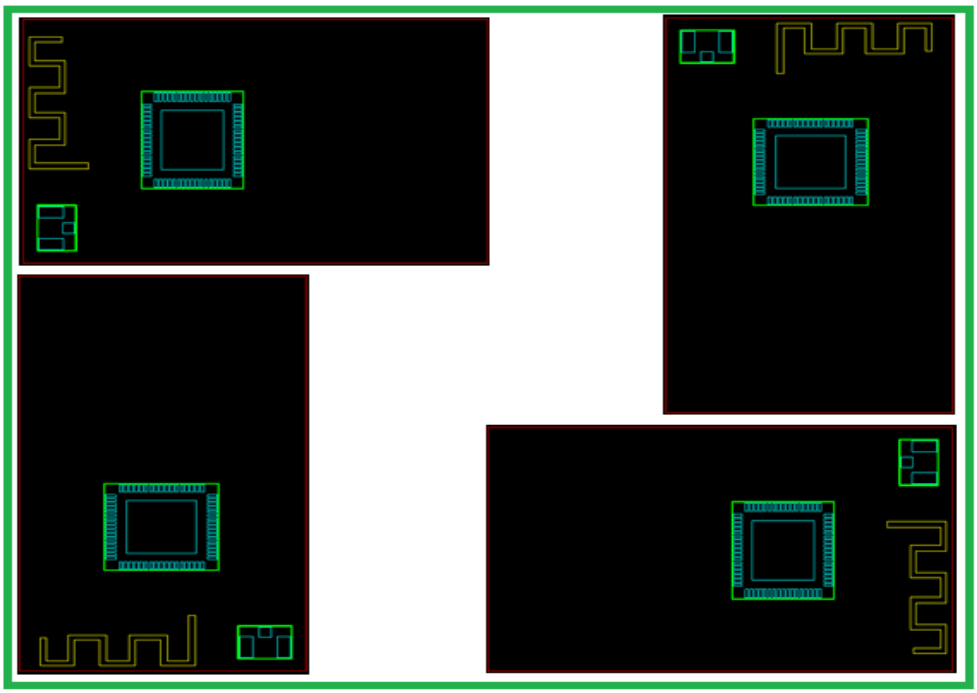

8.3 Specification of On-Board Antenna

OperatingFrequency	2.4G~2.5GHz
VSWR(max)	2
Peak Gain	1.46dBi
AntennaType	PIFA

Appendix A Glossary（Quentin respible）

ADC	Analog-to -Digital Converter
AES	Advanced Encryption Standard
ANT	Antenna
AP	Wireless Access Point
BPSK	Binary Phase Shift Keying
DBPSK	Differential binary phase shift keying
DC	Direct Current
CCK	Complementary Code Keying
CDM	Charge Device Model
DHCP	Dynamic Host Configuration Protocol
CMOS	Complementary Metal Oxide Semiconductor
DNS	Determination of non-significance
DQPSK	Differential quadrature phase shift keying
DSSS	Demand assigned signaling and switching subsystem
DTIM	Digital Transmission Interface Module
EMSP	Enhanced Modular Signal Processor
ESD	Electrostatic Discharge
EVM	Error Vector Magnitude
FCC	Federal Communications Commission
FER	Floating Error
GND	Ground
GPIO	General Purpose Input/Output
HBM	Human body model
IEEE	Institute of Electrical and Electrionics Engineers
IO	Input/Output
IOT	Individual operation test
IPv4	Internet Protocol version 4
LED	Light-emitting diode
LVTTL	Low Voltage Transistor Transistor Logic
MAC	Medium Access Control layer
MCS	Modulation and coding scheme
MCU	Microcontroller Unit
MIMO	Multiple-Input Multiple-Output
MSL	Multilayer Switching Protocol
NC	Numerical Control
NRST	Negative Reset
OFDM	Orthogonal Frequency Division Multiplexing
OSC	Oscillator
PCB	Printed Circuit Board
PIFA	Planar inverted F antenna
QPSK	Quadrature Phase Shift Keyin
RC	Resistance- capacitance
RF	Radio Frequency

RISC	Reduced Instruction Set Computer
RoHS	Restriction of Hazardous Substances
RX	Receiver
SDIO	Serial Digital Input/Output
SoC	System on Chip
SPDT	Single-Pole Double-Throw
SPI	Serial Peripheral Interface
STA	Spanning Tree Algorithm
TCP	Transfer Control Protocol
TKIP	Temporal Key Integrity Protocol
TX	Transmitter
IP	Internet Protocol
UART	Universal Asynchronous Receiver/Transmitter
UDP	User Datagram Protocol
UFL	a miniature coaxial RF connector for high-frequency signals manufactured by Hirose Electric Group
VSWR	Voltage Standing Wave Ratio
WEP	Wired Equivalent Privacy
WEPA	Welded Electronic Packaging Association
WEP64	64 bit Wired Equivalent Privacy
WEP128	128 bit Wired Equivalent Privacy
WPA2	Wi-Fi Protected Access 2
XTAL	External Crystal Oscillator
QAM	Quadrature Amplitude Modulation
802.11 b/g/n	The IEEE 802.11 b/g/n

Appendix B Reference paper（Quentin respible）

[1] IEEE 802.11b/g/n- published IEEE 802.11-2007wireless networking standard and published IEEE 802.11-2012 standard for Information technology - Clause 19 of the publishedIEEE 802.11-2007 standard, and Clause 19 of the published IEEE 802.11-2012 standard.

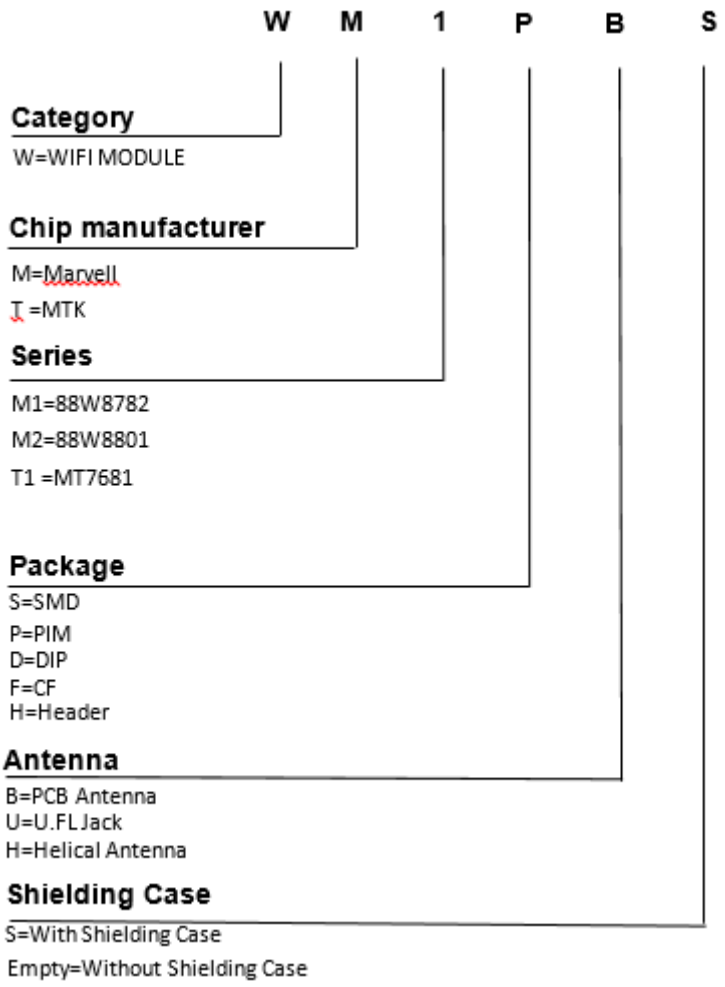

Contact Us

BroadLink

Hangzhou Gubei Electronics Technology Co., Ltd.

Room 106, Building 1, No. 611 Jianghong Road, Binjiang, Hangzhou, Zhejiang, P.R.China
T: +86-571-85159281 F: +86-571-86631817
E: intl@broadlink.com.cn W: www.ibroadlink.com.cn

This device complies with part 15 of the FCC Rules. Operation is subject to the following two conditions: (1) This device may not cause harmful interference, and (2) this device must accept any interference received, including interference that may cause undesired operation.

FCC Radiation Exposure Statement:

This equipment complies with FCC radiation exposure limits set forth for an uncontrolled environment. This equipment should be installed and operated with minimum distance 20cm between the radiator& your body.
This transmitter must not be co-located or operating in conjunction with any other antenna or transmitter.

The OEM or final integrator must ensure that FCC labeling requirements are met. This includes an additional label on the outside of the final product housing with the following contents:
Company Name
Model:WT1SBSL,3301-SBSL
FCC ID:2ACDZ-3301-SBSL
This device complies with part 15 of the FCC Rules. Operation is subject to the following two conditions:
(1) This device may not cause harmful interference, and
(2) this device must accept any interference received, including interference that may cause undesired operation.
To satisfy FCC RF Exposure requirements for this transmission devices, a separation distance of 20cm or more should be maintained between the antenna of this device and persons during operation. To ensure compliance, operation at closer than this distance is not recommended. The antenna(s) used for this transmitter must not be co‐located or operating in conjunction with any other antenna or transmitter.
Changes or modifications not expressly approved by the party responsible for compliance could void the user's authority to operate the equipment.
The modular transmitter must be equipped with either a permanently affixed label or must be capable of electronically displaying its FCC identification number:
(A) If using a permanently affixed label, the modular transmitter must be labeled with its own FCC identification number, and, if the FCC identification number is not visible when the module is installed inside another device, then the outside of the device into which the module is installed must also display a label referring to the enclosed module. This exterior label can use wording such as the following: “Contains Transmitter Module FCC ID: 2ACDZ-3301-SBSL” or “Contains FCC ID:2ACDZ-3301-SBSL.” Any similar wording that expresses the same meaning may be used. The Granteemay either provide such a label, an example of which must be included in the application for
equipment authorization, or, must provide adequate instructions along with the module which explain this requirement. In the latter case, a copy of these instructions must be included in the application for equipment authorization