1001201982, P38, 000, 03, S phase Released

Released for Serial production
Checked by: ALLAGMCA date: 20200610
Released by: GUGIGMCA date: 20200610

Project No	Doc description		Doc part	Document No.
	1001002222 – RFID DESS GEN2 SPEC		000	1001201982
Product group	**Customer**	**Owner**	**Doc type**	**Version**
Electronic Control	BRP	GUGIGMCA	P38	03

1001002222 – RFID DESS GEN2 SPEC

Printed copies are uncontrolled. Print date: 20200610

1001201982, P38, 000, 03, S phase Released

Product Specification and User Manual
RFID DESS System GEN2

ORIGIN

Originator	Guy Gingras	Date	2020-05-05
Last Modified	Martin Goulet	Date	2020-05-08
Last modified	Alain Lafreniere	Date	2020-06-10

RELEASE HISTORY

Release	Modifications	Date	Changes made by
1	Initial Release – Based on 1000996039-05	2020-05-05	Guy Gingras
2	Electrical specifications section 4.1.1	2020-05-08	Martin Goulet
3	FCC and IC statement	2020-06-10	Alain Lafreniere

REFERENCE

Name	Function / Title
Martin Goulet	Electronic Designer
William Deshaies	Software Designer
Christian Laing	Mechanical Designer
Guy Gingras	R&D Manager
Luc St-Pierre	Sales & Marketing

All information contained herein is confidential and/or proprietary to Kongsberg Inc. and any unauthorized disclosure or utilization is expressly prohibited. The information is legally safeguarded by digital fingerprints and offenders will be held liable for any damages suffered. All rights and/or title to any intellectual property are reserved.

Printed copies are uncontrolled. Print date: 20200610

1001201982, P38, 000, 03, S phase Released

Contents

Contents 2
Figures 4
Tables 5
FCC and IC statement 6
Applicable Standard and Regulations 7
References 9
Audience and confidentiality 9
Terminology 10
1 General information 11
2 RFID DESS System Overview 12
2.1 RFID Key 13
2.2 RFID DESS Post 14
3 RFID DESS Functional Specification 16
3.1 Bidirectional Communication 16
3.2 Cut-off System 16
3.3 Operating and Storage Temperature 16
3.4 RFID Tag Reading Sequence 16
4 RFID DESS Electrical Specification 18
4.1 Connector 18
5 RF Specifications 21
6 Localization and Installation on Vehicle 22
6.1 Metallic Materials 22
6.2 Noise Sources Identifications 24
7 Diagnostic Tool 25
7.1 CAN Variant 25

All information contained herein is confidential and/or proprietary to Kongsberg Inc. and any unauthorized disclosure or utilization is expressly prohibited. The information is legally safeguarded by digital fingerprints and offenders will be held liable for any damages suffered. All rights and/or title to any intellectual property are reserved.

Printed copies are uncontrolled. Print date: 20200610

1001201982, P38, 000, 03, S phase Released

7.2 MOWP Variant 26
7.3 Performance Criteria 31
8 RF Compliances 32

All information contained herein is confidential and/or proprietary to Kongsberg Inc. and any unauthorized disclosure or utilization is expressly prohibited. The information is legally safeguarded by digital fingerprints and offenders will be held liable for any damages suffered. All rights and/or title to any intellectual property are reserved.

Printed copies are uncontrolled. Print date: 20200610

1001201982, P38, 000, 03, S phase Released

Figures

Figure 1: RFID Key and Post System 12

Figure 2: RFID DESS System Block Diagram 13

Figure 3: RFID DESS Key Composition 14

Figure 4: RFID DESS Post - CAN 15

Figure 5: RFID DESS Post - MOWP 15

Figure 6: UID Reading Sequence. 17

Figure 7: CAN Variant Connector 18

Figure 8: MOWP Variant Connector 18

Figure 9: Example of Vehicle Installation 22

Figure 10: Recommended Clearance Zone for Metallic Material 23

Figure 11: RFID Diagnostic Tool 26

Figure 12: Example of probe wire output 27

Figure 13: Configuration for Radiated Noise Validation 28

Figure 14: Configuration for Noise Validation Performance 30

All information contained herein is confidential and/or proprietary to Kongsberg Inc. and any unauthorized disclosure or utilization is expressly prohibited. The information is legally safeguarded by digital fingerprints and offenders will be held liable for any damages suffered. All rights and/or title to any intellectual property are reserved.

Printed copies are uncontrolled. Print date: 20200610

1001201982, P38, 000, 03, S phase Released

Tables

Table 1: Terminology..... 10

Table 2: RFID DESS System Part Numbers 11

Table 3: RFID DESS System Software 11

Table 4: RFID DESS Post Pinout..... 18

Table 5: GND Characteristics..... 19

Table 6: CONTACT Characteristics. 19

Table 7: CAN LO Characteristics. 19

Table 8: 1-WIRE / MOWP Characteristics..... 20

Table 9: VBATT Characteristics. 20

Table 10: CAN HI Characteristics. 20

Table 11: RF Characteristics..... 21

All information contained herein is confidential and/or proprietary to Kongsberg Inc. and any unauthorized disclosure or utilization is expressly prohibited. The information is legally safeguarded by digital fingerprints and offenders will be held liable for any damages suffered. All rights and/or title to any intellectual property are reserved.

Printed copies are uncontrolled. Print date: 20200610

1001201982, P38, 000, 03, S phase Released

FCC and IC statement

This device complies with part 15 of the FCC Rules. Operation is subject to the following two conditions: (1) This device may not cause harmful interference, and (2) this device must accept any interference received, including interference that may cause undesired operation.

Changes or modifications not expressly approved by the party responsible for compliance could void the user's authority to operate the equipment.

This device contains licence-exempt transmitter(s)/receiver(s) that comply with Innovation, Science and Economic Development Canada's licence-exempt RSS(s). Operation is subject to the following two conditions:

(1) This device may not cause interference.

(2) This device must accept any interference, including interference that may cause undesired operation of the device.

L'émetteur/récepteur exempt de licence contenu dans le présent appareil est conforme aux CNR d'Innovation, Sciences et Développement économique Canada applicables aux appareils radio exempts de licence. L'exploitation est autorisée aux deux conditions suivantes :

(1) l'appareil ne doit pas produire de brouillage;

(2) l'appareil doit accepter tout brouillage radioélectrique subi, même si le brouillage est susceptible d'en compromettre le fonctionnement.

All information contained herein is confidential and/or proprietary to Kongsberg Inc. and any unauthorized disclosure or utilization is expressly prohibited. The information is legally safeguarded by digital fingerprints and offenders will be held liable for any damages suffered. All rights and/or title to any intellectual property are reserved.

Printed copies are uncontrolled. Print date: 20200610

1001201982, P38, 000, 03, S phase Released

Applicable Standard and Regulations

- ISO/IEC 15693-1:2000 Identification cards — Contactless integrated circuit(s) cards — Vicinity cards — Part 1: Physical characteristics.
- ISO/IEC 15693-2:2006 Identification cards — Contactless integrated circuit cards — Vicinity cards — Part 2: Air interface and initialization.
- ISO/IEC 15693-3:2009 Identification cards — Contactless integrated circuit cards — Vicinity cards — Part 3: Anticollision and transmission protocol.
- Maxim 1-Wire protocol – DS2401, 195860 rev 5/11, May 2011.
- ISO 11898-1:2015 – Road vehicles – Controller Area Network (CAN) – Part 1: Data link layer and physical signalling
- Keyword Protocol 2000 - Part 3 - Application Layer, Swedish Implementation Standard, SSF 14230-3 Issue 2, February 1, 2000.
- SSCC/11 Snowmobile Safety and Certification Committee
- ISO 13590 Small craft - Personal watercraft - Construction and system installation requirements
- USCG 33 CFR Title 33, Part 183
- ISO 8846 Small craft -- Electrical devices -- Protection against ignition of surrounding flammable gases
- IN 40050 Protection of electrical equipment against contact, foreign bodies & water.
- EN 55012:2007 Vehicles, boats and internal combustion engines – Radio disturbance characteristics – Limits and methods of measurement for the protection of off-board receivers (CISPR 12:2007)
- EN 55025:2003 Vehicles, boats and internal combustion engines — Radio disturbance characteristics — Limits and methods of measurement for the protection of off-board receivers (CISPR 25:2003).
- EN 61000-6-1:2007Electromagnetic Compatibility – Generic immunity Standard, Part 1: Residential, Commercial and Light Industry

All information contained herein is confidential and/or proprietary to Kongsberg Inc. and any unauthorized disclosure or utilization is expressly prohibited. The information is legally safeguarded by digital fingerprints and offenders will be held liable for any damages suffered. All rights and/or title to any intellectual property are reserved.

Printed copies are uncontrolled. Print date: 20200610

1001201982, P38, 000, 03, S phase Released

- IEC 61000-4-2, Edition 2.0, 2008 Electromagnetic compatibility (EMC) - Part 4-2: Testing and measurement techniques - Electrostatic discharge immunity test
- IEC 61000-4-6, Edition 3.2, 2010 Electromagnetic compatibility (EMC) - Part 4-6: Testing and measurement techniques – Immunity to conducted disturbances, induced by radio-frequency fields
- ISO 7637 (2011) Road vehicles Electrical disturbances from conduction and coupling
- RSS-GEN General Requirements and Information for the Certification of Radio Apparatus
- RSS-210 License-exempt Radio Apparatus (All Frequency Bands): Category I Equipment
- FCC 47 CFR Part 15 Subpart C Federal Communications Commission. Part 15 Radio Frequency Devices. Radiated Emission Limits
- ETSI EN 300 330-2 Electromagnetic compatibility and Radio spectrum Matters (ERM); Short Range Devices (SRD)
- ETSI EN 60950-1 Information technology equipment - Safety - Part 1: General requirements
- 003-00-01 BRP Engineering Specification. Exposure to solvents
- 003-00-02 BRP Engineering Specification Exposure to salt water
- 003-00-03 BRP Engineering Specification Exposure to ozone
- 003-00-04 BRP Engineering Specification Exposure to solar radiation
- 003-00-05A BRP Engineering Specification Plastic materials' exposure to the environment
- 090-01-01a BRP Engineering Specification Decals

All information contained herein is confidential and/or proprietary to Kongsberg Inc. and any unauthorized disclosure or utilization is expressly prohibited. The information is legally safeguarded by digital fingerprints and offenders will be held liable for any damages suffered. All rights and/or title to any intellectual property are reserved.

Printed copies are uncontrolled. Print date: 20200610

1001201982, P38, 000, 03, S phase Released

References

- Technical requirement document "TRD-12-0016 Ski-Doo DESS key Rev 2.pdf"
- Technical requirement document “TRD-18-0019 Ski-Doo DESS POWT MY21.pdf"
- 000001 FO-QA-029 KA SKIDOO 600 ETEC Capacitor Grounding Return Problems
- 000002 FO-QA-029 KA RFID DESS Grounding Problems
- 000003 FO-QA-029 KA SKIDOO TUNDRA 600 ETEC Harness Problems
- 000004 FO-QA-029 KA SKIDOO TUNDRA 600 ETEC Radiation Problems

Audience and confidentiality

This document is intended for Kongsberg Automotive and BRP technical staff only.

All information contained herein is confidential and/or proprietary to Kongsberg Inc. and any unauthorized disclosure or utilization is expressly prohibited. The information is legally safeguarded by digital fingerprints and offenders will be held liable for any damages suffered. All rights and/or title to any intellectual property are reserved.

Printed copies are uncontrolled. Print date: 20200610

1001201982, P38, 000, 03, S phase Released

Terminology

Terms and abbreviations	Description
MOWP	Megatech One Wire Protocol
CAN	Controller Area Network
ECM	Engine Control Module
ECU	Electronic Control Unit
FT	Feet
Tag	ISO15693 compliant transponder
Base Station	AS3914 chip used to communicate with a tag
Antenna	Guide for wave transmission
PCB	Printed Circuit Board
Hz	Hertz
Hall effect sensor	Sensor affected by magnetic change.
m	Meter
min	Minute
ms	Millisecond
S8 (S16, S32)	Data format, signed 8 (16, 32) bits, big endian (most significant byte first)
s	Seconds
TESTER	Diagnostic or calibration tool
U8 (U16, U24, U32)	Data format, unsigned 8 (16, 24, 32) bits, big endian
UID	Unique IDentifier

Table 1: Terminology

All information contained herein is confidential and/or proprietary to Kongsberg Inc. and any unauthorized disclosure or utilization is expressly prohibited. The information is legally safeguarded by digital fingerprints and offenders will be held liable for any damages suffered. All rights and/or title to any intellectual property are reserved.

Printed copies are uncontrolled. Print date: 20200610

1001201982, P38, 000, 03, S phase Released

1 General information

This document contains the functional, communication and electrical specifications for the RFID DESS System GEN2. The product is available in two variants of communication interface: a CAN or a MOWP. The MOWP based device replaces previous generation of the RFID Post.

For mechanical details, refer to drawing listed in Table 2.

Drawing numbers, Kongsberg and customer part numbers are listed in the table below.

Part Description	Generic Drawing Number	Kongsberg Part Number	Customer Part Number
RFID Post CAN	1001002222	1001105692	710006855
RFID Post MOWP	1001002222	1001105693	515178840
RFID Key	1000634541	Multiple variant	Multiple variant

Table 2: RFID DESS System Part Numbers

Functional and communication specifications are valid for the softwares listed below.

KA Part number/Description	Customer Part Number
RFID Post CAN	
Bootloader	1001105710_00_06
Application	1001105709_00_16
Calibration	100112753_00_02
RFID Post MOWP	
Bootloader	1001105710_0T_02
Application	1001105709_0T_03
Calibration	100112753_0T_01

Table 3: RFID DESS System Software

All information contained herein is confidential and/or proprietary to Kongsberg Inc. and any unauthorized disclosure or utilization is expressly prohibited. The information is legally safeguarded by digital fingerprints and offenders will be held liable for any damages suffered. All rights and/or title to any intellectual property are reserved.

Printed copies are uncontrolled. Print date: 20200610

1001201982, P38, 000, 03, S phase Released

2 RFID DESS System Overview

The RFID DESS System is composed of 2 parts, the RFID Key and the RFID Post. Details about these are provided in section 2.1and 2.2 respectively.

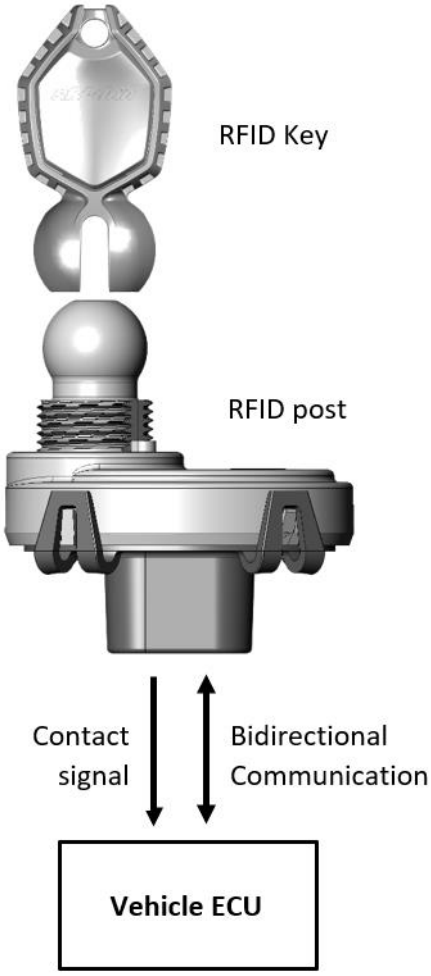

Figure 1: RFID Key and Post System

All information contained herein is confidential and/or proprietary to Kongsberg Inc. and any unauthorized disclosure or utilization is expressly prohibited. The information is legally safeguarded by digital fingerprints and offenders will be held liable for any damages suffered. All rights and/or title to any intellectual property are reserved.

Printed copies are uncontrolled. Print date: 20200610

1001201982, P38, 000, 03, S phase Released

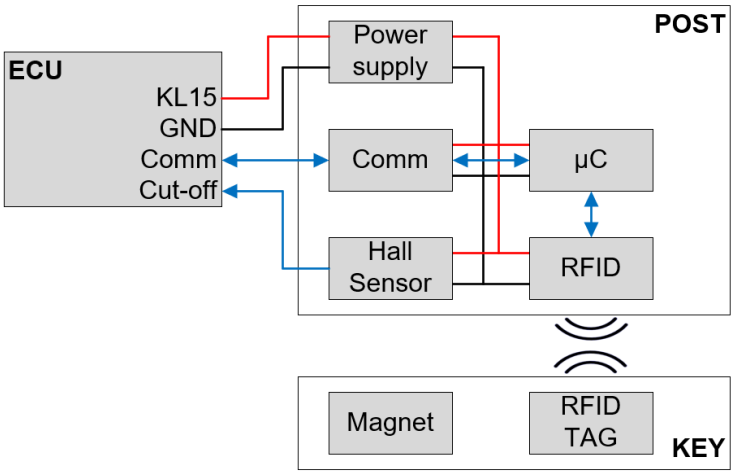

Figure 2: RFID DESS System Block Diagram

The vehicle ECU powers the RFID Post from the positive switched battery connection (KL15). Once powered, the RFID Post senses the RFID Key's magnet using its internal hall sensor. The hall sensor's output is pulled low if a magnetic field is sensed, allowing the vehicle engine to start. At the same time, the RFID Post's microcontroller (µC) activates the RFID initiator/reader, powering the RFID Key's tag, allowing it to send it's UID. A message is then transmitted to the ECU through a bidirectional communication link. Refer to section 3.4 for additional details about RFID tag reading sequence.

2.1 RFID Key

As illustrated in Figure 3, the RFID Key is composed of a plastic housing, 2 trim caps (not shown), a magnet, a RFID tag and a spacer. The last 3 elements are contained in an intermediate shell (not shown), needed to seal them from the external environment.

The tag is ISO15693 compliant.

All information contained herein is confidential and/or proprietary to Kongsberg Inc. and any unauthorized disclosure or utilization is expressly prohibited. The information is legally safeguarded by digital fingerprints and offenders will be held liable for any damages suffered. All rights and/or title to any intellectual property are reserved.

Printed copies are uncontrolled. Print date: 20200610

1001201982, P38, 000, 03, S phase Released

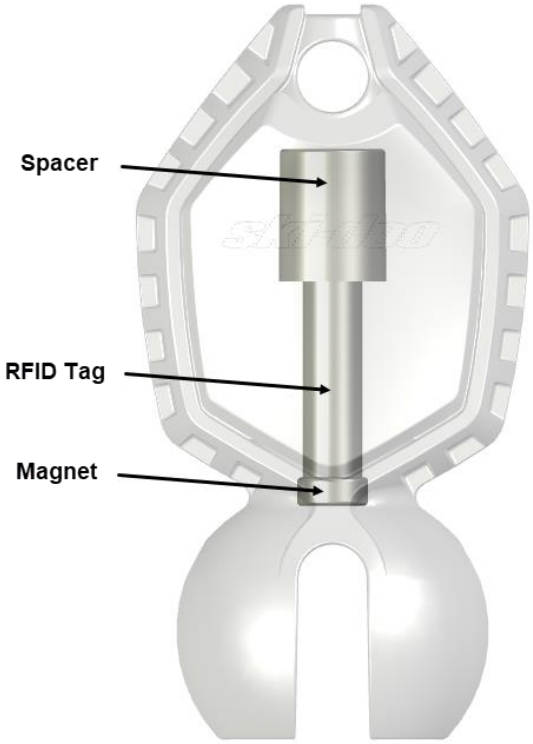

Figure 3: RFID DESS Key Composition

2.2 RFID DESS Post

As illustrated in Figure 4 and Figure 5, the Post is composed of a plastic cover, an O-ring, a main PCB, a header, a secondary PCB and a plastic housing.

The plastic cover, plastic housing and O-ring protect the internals from the external environment.

The cover provides a mechanical mating interface for a connector. The CAN variant has a 5-pin connector, the MOWP variant has a 4-pin connector. Those overmolded pins are providing the electrical path between the main PCB and the vehicle's harness connected to the ECU.

All information contained herein is confidential and/or proprietary to Kongsberg Inc. and any unauthorized disclosure or utilization is expressly prohibited. The information is legally safeguarded by digital fingerprints and offenders will be held liable for any damages suffered. All rights and/or title to any intellectual property are reserved.

Printed copies are uncontrolled. Print date: 20200610

1001201982, P38, 000, 03, S phase Released

The secondary PCB is mounted to the main PCB using a 3-pin header. The secondary PCB holds the hall sensor. The main PCB holds the remaining electronics needed for operation: power supply, microcontroller, communication transceiver, contact output circuitry, RFID initiator/reader and antenna.

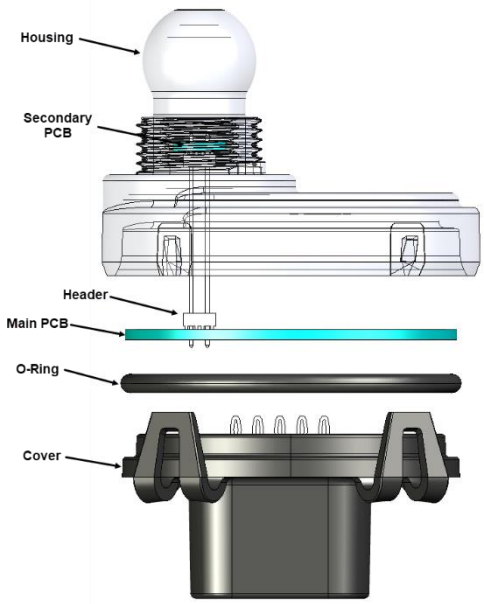

Figure 4: RFID DESS Post - CAN

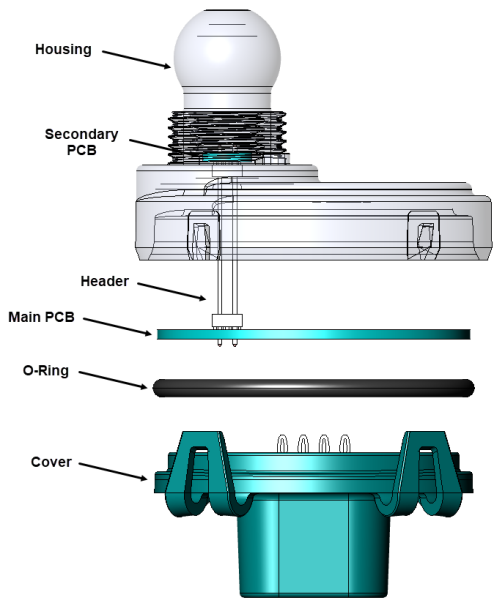

Figure 5: RFID DESS Post - MOWP

All information contained herein is confidential and/or proprietary to Kongsberg Inc. and any unauthorized disclosure or utilization is expressly prohibited. The information is legally safeguarded by digital fingerprints and offenders will be held liable for any damages suffered. All rights and/or title to any intellectual property are reserved.

Printed copies are uncontrolled. Print date: 20200610

1001201982, P38, 000, 03, S phase Released

3 RFID DESS Functional Specification

3.1 Bidirectional Communication

3.1.1 CAN variant

The RFID Post is designed to exchange information via CAN protocol with the ECU.

3.1.2 MOWP variant

The RFID Post is designed to exchange information via Maxim 1-Wire protocol with the ECU. It is also possible to communicate with the module using a MPI2.5 CAN-to-MOWP converter for diagnostics purposes.

3.2 Cut-off System

The RFID DESS Post's contact output serves as a Fail-Safe Cut-off system, based on a non-contact magnetic switch, that sends a stop signal to the vehicle engine in case of a key disconnection (i.e: driver fell-off of vehicle). Please see customer's technical requirement document for details.

3.3 Operating and Storage Temperature

The RFID DESS System has an operating and storage temperature range of -40°C to +85°C.

3.4 RFID Tag Reading Sequence

Figure 6 shows the sequence performed by the RFID Post's microcontroller to acquire the UID from power up. This sequence takes less than 500ms to be completed. The communication between the tag and the RFID is compliant with the wireless protocol ISO15693.

All information contained herein is confidential and/or proprietary to Kongsberg Inc. and any unauthorized disclosure or utilization is expressly prohibited. The information is legally safeguarded by digital fingerprints and offenders will be held liable for any damages suffered. All rights and/or title to any intellectual property are reserved.

Printed copies are uncontrolled. Print date: 20200610

1001201982, P38, 000, 03, S phase Released

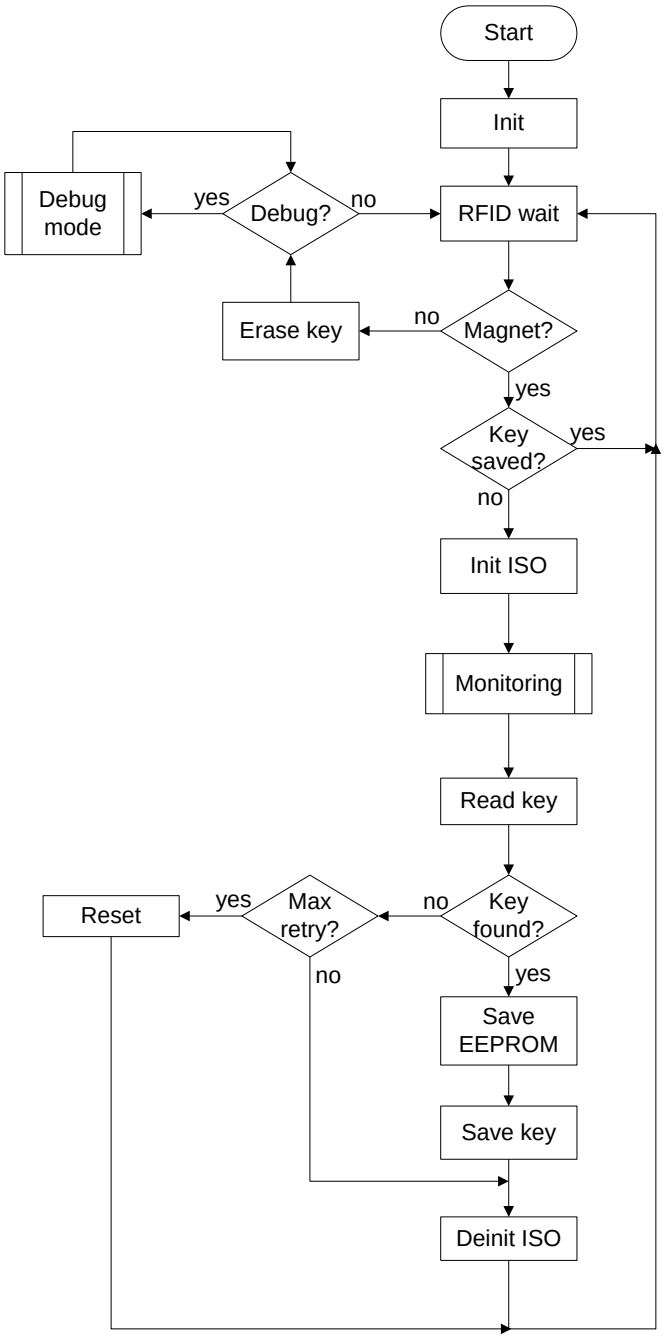

Figure 6: UID Reading Sequence.

All information contained herein is confidential and/or proprietary to Kongsberg Inc. and any unauthorized disclosure or utilization is expressly prohibited. The information is legally safeguarded by digital fingerprints and offenders will be held liable for any damages suffered. All rights and/or title to any intellectual property are reserved.

Printed copies are uncontrolled. Print date: 20200610

1001201982, P38, 000, 03, S phase Released

4 RFID DESS Electrical Specification

4.1 Connector

The electrical connection between the RFID Post shall use the sealed connector Delphi GT 150 series. Refer to product drawing for more details.

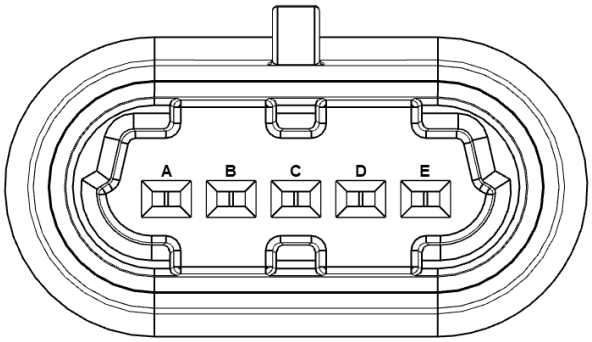

Figure 7: CAN Variant Connector

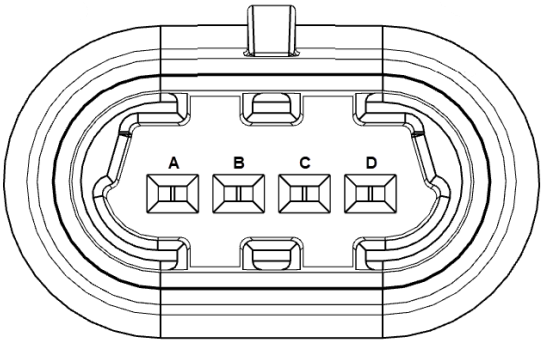

Figure 8: MOWP Variant Connector

The following table outlines the RFID Post's pinout.

Pin	CAN Variant – Pin Name	MOWP Variant – Pin Name	Type
A	GND	GND	Power
B	CONTACT	CONTACT	Signal
C	CAN Lo	1-WIRE/MOWP	Communication
D	VBATT	VBATT	Power
E	CAN H	-	Communication

Table 4: RFID DESS Post Pinout

All information contained herein is confidential and/or proprietary to Kongsberg Inc. and any unauthorized disclosure or utilization is expressly prohibited. The information is legally safeguarded by digital fingerprints and offenders will be held liable for any damages suffered. All rights and/or title to any intellectual property are reserved.

Printed copies are uncontrolled. Print date: 20200610

1001201982, P38, 000, 03, S phase Released

4.1.1 Pin A: GND

This pin is used as the RFID Post power return, to be connected to the vehicle's main ground.

Characteristic	Unit	Minimum	Nominal	Maximum
Voltage, absolute maximum rating (steady state)	V	-18	---	18

Table 5: GND Characteristics.

4.1.2 Pin B: CONTACT

This pin is used as an engine cut-off signal, pulled low to activate engine.

Characteristic	Unit	Minimum	Nominal	Maximum
Voltage, absolute maximum rating (steady state)	V	-18	---	18
Voltage, operating	V	6	12	18
Low level when triggered	V	0	---	0.4

Table 6: CONTACT Characteristics.

4.1.3 Pin C: CAN LO

This pin is used for communication with an ECM or a diagnostic tool.

Characteristic	Unit	Minimum	Nominal	Maximum
Voltage, absolute maximum rating (steady state)	V	-18	---	18
Voltage, operating	V		5	
Dominant state	V	0.5	---	2.25
Recessive state	V	2	2.5	3

Table 7: CAN LO Characteristics.

All information contained herein is confidential and/or proprietary to Kongsberg Inc. and any unauthorized disclosure or utilization is expressly prohibited. The information is legally safeguarded by digital fingerprints and offenders will be held liable for any damages suffered. All rights and/or title to any intellectual property are reserved.

Printed copies are uncontrolled. Print date: 20200610

1001201982, P38, 000, 03, S phase Released

4.1.4 Pin C: 1-WIRE / MOWP

This pin is used for communication with an ECM or a diagnostic tool.

Characteristic	Unit	Minimum	Nominal	Maximum
Voltage, absolute maximum rating (steady state)	V	-18	---	18
Voltage, operating	V		5	
Logic level	V	Low: 1.45	---	High: 3.25

Table 8: 1-WIRE / MOWP Characteristics.

4.1.5 Pin D: VBATT

This pin is used to supply power to the RFID Post, to be connected to the vehicle's positive switched battery connection (KL15).

Characteristic	Unit	Minimum	Nominal	Maximum
Voltage, absolute maximum rating (steady state)	V	-18	---	18
Voltage, operating	V	6[1]	---	18
DC current	mA	20	27, 160	200

Table 9: VBATT Characteristics.

4.1.6 Pin E: CAN HI

This pin is used for communication with an ECM or a diagnostic tool.

Characteristic	Unit	Minimum	Nominal	Maximum
Voltage, absolute maximum rating (steady state)	V	-18	---	18
Voltage, operating	V		5	
Dominant state	V	2.75	---	4.5
Recessive state	V	2	2.5	3

Table 10: CAN HI Characteristics.

[1] Key reading may be affected during starting profile and similar events.

All information contained herein is confidential and/or proprietary to Kongsberg Inc. and any unauthorized disclosure or utilization is expressly prohibited. The information is legally safeguarded by digital fingerprints and offenders will be held liable for any damages suffered. All rights and/or title to any intellectual property are reserved.

Printed copies are uncontrolled. Print date: 20200610

1001201982, P38, 000, 03, S phase Released

5 RF Specifications

The RFID Post has the following RF performance over temperature.

Characteristic	Unit	Minimum	Nominal	Maximum
RF Output Power	W	0	---	0.4
Operating Frequency	MHz	13.55	13.56	13.57
Frequency Stability	ppm	-90	-	+90

Table 11: RF Characteristics

The antenna is built-in the PCB and cannot be replaced without modifying the PCB. No external antenna can be connected to this device. RF circuit is matched for internal antenna only.

All information contained herein is confidential and/or proprietary to Kongsberg Inc. and any unauthorized disclosure or utilization is expressly prohibited. The information is legally safeguarded by digital fingerprints and offenders will be held liable for any damages suffered. All rights and/or title to any intellectual property are reserved.

Printed copies are uncontrolled. Print date: 20200610

1001201982, P38, 000, 03, S phase Released

6 Localization and Installation on Vehicle

The RFID DESS System shall be installed as the previous DESS System generation. The RFID Post should be secured to the vehicle's body using the Post retaining ring 278 002 963. The Post's sphere and thread must protrude out of the vehicle's body and be accessible by the operator, while the Post's main body shall be inside the vehicle's body.

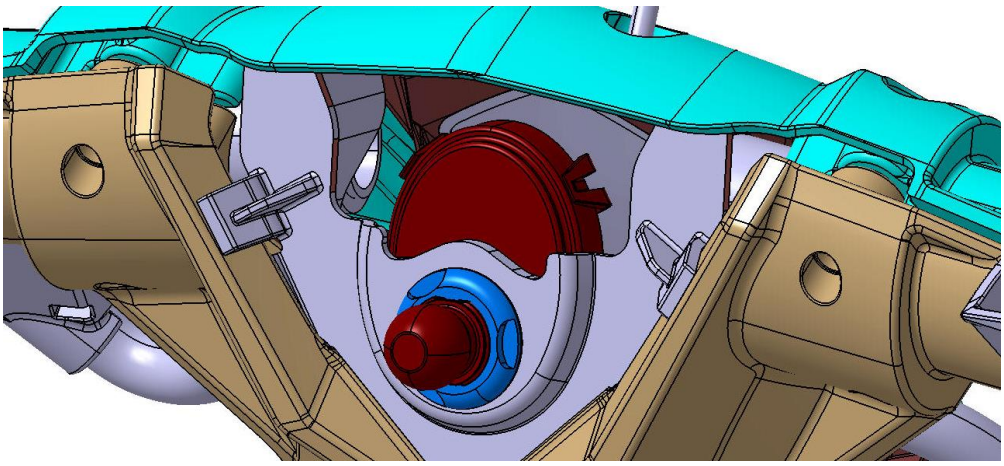

Figure 9: Example of Vehicle Installation

6.1 Metallic Materials.

The RFID Post shall be located away from any metallic material of the body works; 5 cm of clearance in any direction shall be observed. In cases this cannot be respected, the intended mounting position shall be validated by a performance measurement using the diagnostic tool described in section 7.

All information contained herein is confidential and/or proprietary to Kongsberg Inc. and any unauthorized disclosure or utilization is expressly prohibited. The information is legally safeguarded by digital fingerprints and offenders will be held liable for any damages suffered. All rights and/or title to any intellectual property are reserved.

Printed copies are uncontrolled. Print date: 20200610

1001201982, P38, 000, 03, S phase Released

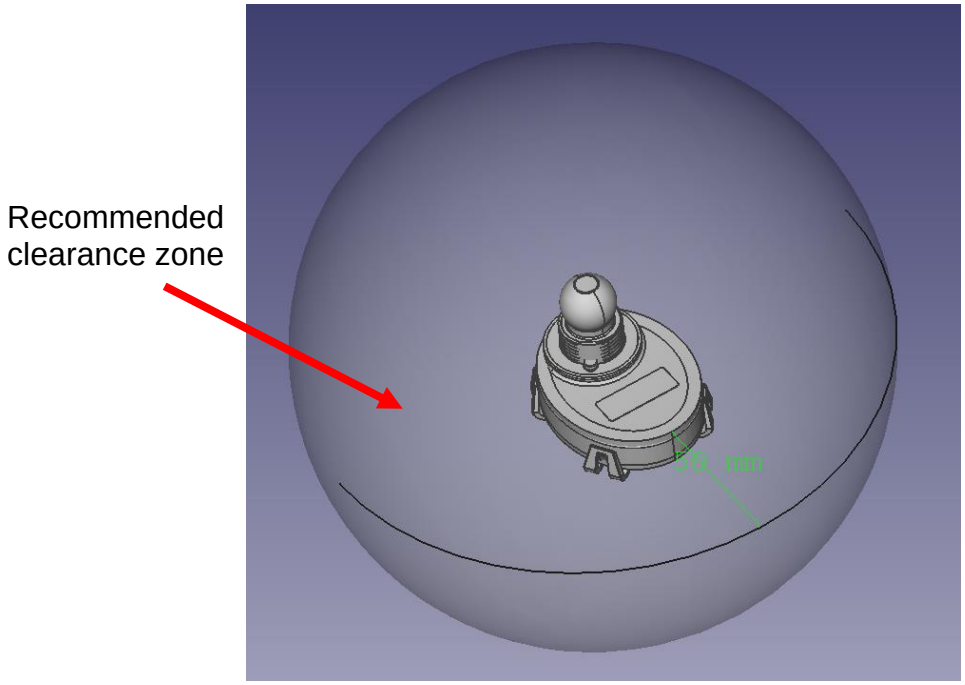

Figure 10: Recommended Clearance Zone for Metallic Material

All information contained herein is confidential and/or proprietary to Kongsberg Inc. and any unauthorized disclosure or utilization is expressly prohibited. The information is legally safeguarded by digital fingerprints and offenders will be held liable for any damages suffered. All rights and/or title to any intellectual property are reserved.

Printed copies are uncontrolled. Print date: 20200610

1001201982, P38, 000, 03, S phase Released

6.2 Noise Sources Identifications

The RFID Post shall be located away from vehicle radiated sources. A minimum of 15 cm in any direction between a radiated noise source and the RFID DESS System is recommended. This intended position shall be validated in any new vehicle or configuration change, using the diagnostic tool described in section 7.

The following documents shall be used as references for RF DESS Post vehicle localisation and Noise interference reduction guidelines.

000001 FO-QA-029-KA Skidoo 600 ETEC Capacitor Grounding Return Problems

000002 FO-QA-029-KA RFID DESS Grounding Problems

000003 FO-QA-029-KA SKIDOO TUNDRA 600 ETEC Harness Problems

000004 FO-QA-029-KA SKIDOO TUNDRA 600 ETEC Radiation Problems

All information contained herein is confidential and/or proprietary to Kongsberg Inc. and any unauthorized disclosure or utilization is expressly prohibited. The information is legally safeguarded by digital fingerprints and offenders will be held liable for any damages suffered. All rights and/or title to any intellectual property are reserved.

Printed copies are uncontrolled. Print date: 20200610

1001201982, P38, 000, 03, S phase Released

7 Diagnostic Tool

KA has designed a tool to analyze performance using the RFID Post. This tool allows the monitoring of performance of the RF transmission between the RFID Key and Post in real time. This tool can be used to diagnose conducted noise, radiated noise or transmission perturbations due to proximity of metallic materials. This tool shall be used to validate intended mounting position of the RFID DESS System on any new vehicle or change in the configuration of an existing one.

7.1 CAN Variant

All the tool listed above are build-in the CAN variant software and readings are available through the diagnostic tool (CADET). No special device/equipment is needed. The base station is connected to diagnostic tool using a standard CAN to USB interface.

All information contained herein is confidential and/or proprietary to Kongsberg Inc. and any unauthorized disclosure or utilization is expressly prohibited. The information is legally safeguarded by digital fingerprints and offenders will be held liable for any damages suffered. All rights and/or title to any intellectual property are reserved.

Printed copies are uncontrolled. Print date: 20200610

1001201982, P38, 000, 03, S phase Released

7.2 MOWP Variant

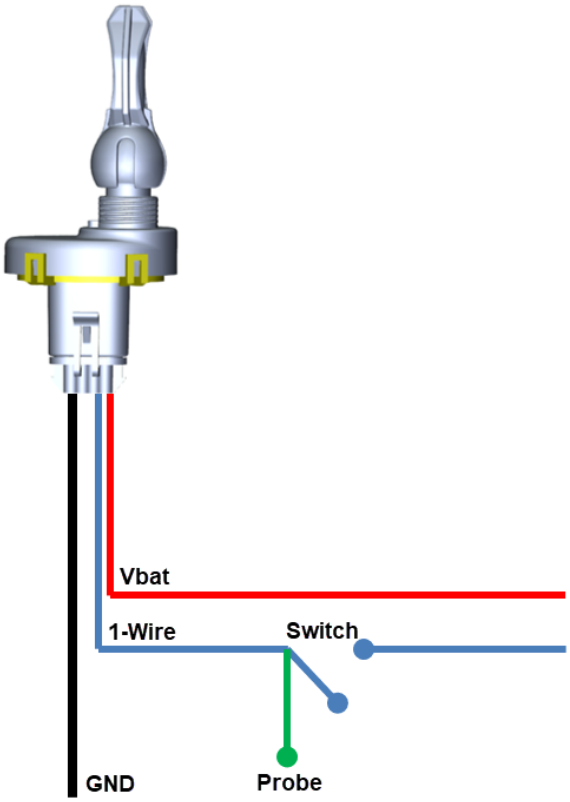

Figure 11: RFID Diagnostic Tool

The diagnostic tool reads the RFID tag every 30 ms. In case of reading error, the probe wire will be pulled low during a period of 30 ms. The probe wire can be monitored using an oscilloscope having a minimum bandwidth of 100 MHz.

All information contained herein is confidential and/or proprietary to Kongsberg Inc. and any unauthorized disclosure or utilization is expressly prohibited. The information is legally safeguarded by digital fingerprints and offenders will be held liable for any damages suffered. All rights and/or title to any intellectual property are reserved.

Printed copies are uncontrolled. Print date: 20200610

1001201982, P38, 000, 03, S phase Released

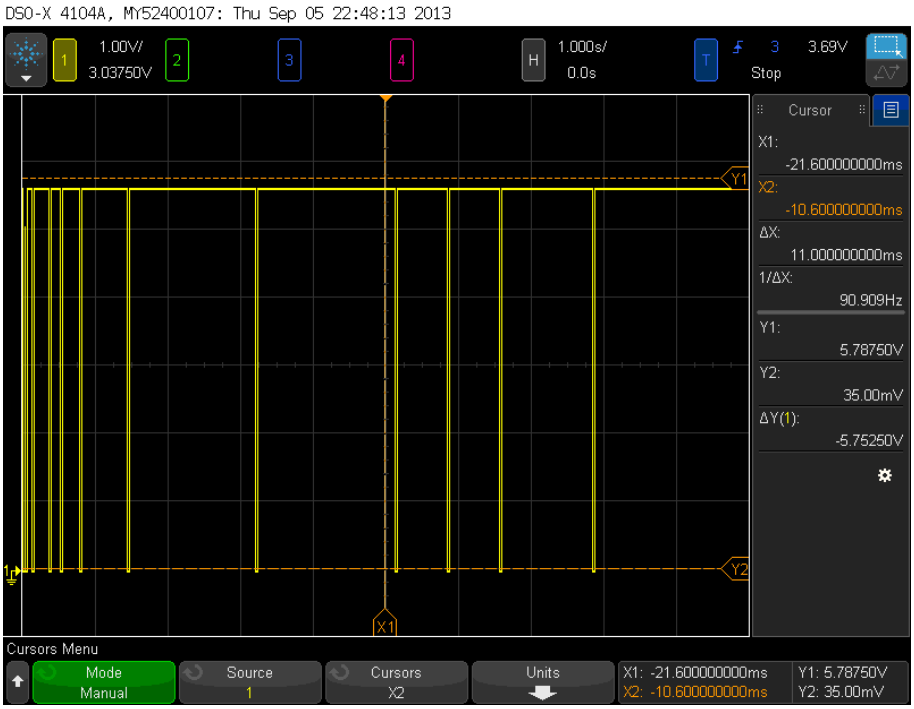

Figure 12: Example of probe wire output

At power up, the RFID diagnostic tool will send the RFID tag's UID over the 1-wire interface. This last approximately five (5) seconds. During this period, the switch allows a temporary connection of the 1-Wire output to the vehicle's ECU for it to authenticate the RFID Key. This allows testing while the vehicle is normal operation.

Note: This unit should be used only for diagnostic or troubleshooting purposes, it is not intended to be used to perform regular driving or test driving as several safety features are disabled. KA will not be held responsible for any problem resulting in using the diagnostic tool against KA's recommendation.

All information contained herein is confidential and/or proprietary to Kongsberg Inc. and any unauthorized disclosure or utilization is expressly prohibited. The information is legally safeguarded by digital fingerprints and offenders will be held liable for any damages suffered. All rights and/or title to any intellectual property are reserved.

Printed copies are uncontrolled. Print date: 20200610

1001201982, P38, 000, 03, S phase Released

7.2.1 Radiated Noise Validation

The main purpose of this validation is to determine whether the RFID DESS System is in the presence of a radiated noise source that could potentially affect the transmission of the RF transmission between the RFID Key and Post. The vehicle under test shall be started in regular operation. The RF Diagnostic tool should be connected as shown in the Figure 13.

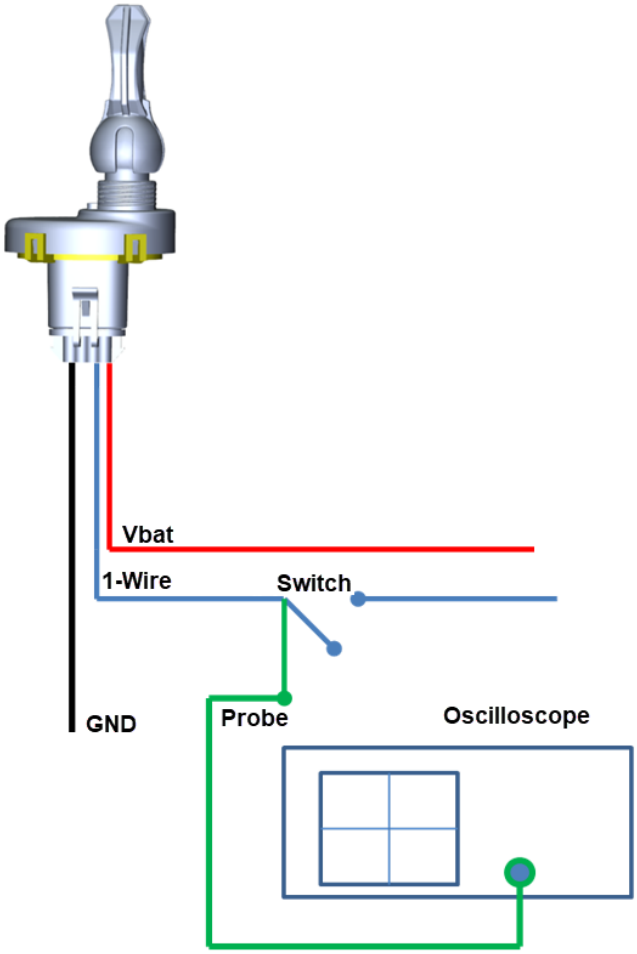

Figure 13: Configuration for Radiated Noise Validation.

All information contained herein is confidential and/or proprietary to Kongsberg Inc. and any unauthorized disclosure or utilization is expressly prohibited. The information is legally safeguarded by digital fingerprints and offenders will be held liable for any damages suffered. All rights and/or title to any intellectual property are reserved.

Printed copies are uncontrolled. Print date: 20200610

1001201982, P38, 000, 03, S phase Released

Once the system is powered-up and the vehicle is started, the diagnostic tool can be used to monitor whether noise sources could be affecting the performance of the RFID DESS System. The document *000004 FO-QA-029-KA SKIDOO TUNDRA 600 ETEC Radiation Problems*, can be used as guidance for measurement or noise source identification.

7.2.2 Metallic Presence Validation

The main purpose of this validation is to determine whether the RFID DESS System is in the presence of a metallic material that could affect the RF transmission between the RFID Key and Post. The vehicle engine and other electrical devices must be completely off. The RF Diagnostic tool should be connected as shown in the Figure 13.

Once the system is powered-up, the diagnostic tool can be used to monitor whether metallic materials are affecting the performance of the RFID signal. The procedure described in the document *000004 FO-QA-029-KA SKIDOO TUNDRA 600 ETEC Radiation Problem*, can be used as guidance for measurement and metallic materials identification.

7.2.3 Conducted Noise Validation

The main purpose of this validation is to determine whether the RFID DESS System is in the presence of a conducted noise source that could potentially affect the RF transmission between the RFID Key and Post. The vehicle under test shall be started with the diagnostic tool. The RF Diagnostic tool should be connected as shown in the Figure 14.

All information contained herein is confidential and/or proprietary to Kongsberg Inc. and any unauthorized disclosure or utilization is expressly prohibited. The information is legally safeguarded by digital fingerprints and offenders will be held liable for any damages suffered. All rights and/or title to any intellectual property are reserved.

Printed copies are uncontrolled. Print date: 20200610

1001201982, P38, 000, 03, S phase Released

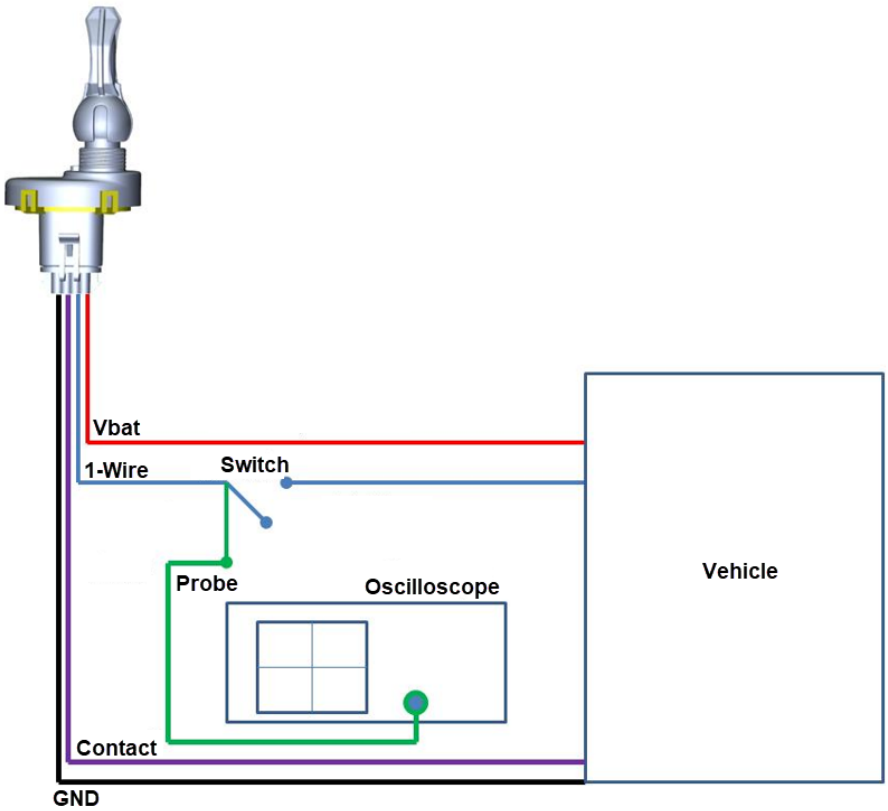

Figure 14: Configuration for Noise Validation Performance

Once the system is powered-up and the vehicle is started, the diagnostic tool can be used to monitor whether conducted noise could be affecting the performance of the RFID signal. The following documents can be used as a guidance for measurement or source identification:

000001 FO-QA-029-KA Skidoo 600 ETEC Capacitor Grounding Return Problems
000002 FO-QA-029-KA RFID DESS Grounding Problems
000003 FO-QA-029-KA SKIDOO TUNDRA 600 ETEC Harness Problems

It is recommended to use an isolation transformer to power the Oscilloscope to avoid ground noise signals that could affect the measurement.

All information contained herein is confidential and/or proprietary to Kongsberg Inc. and any unauthorized disclosure or utilization is expressly prohibited. The information is legally safeguarded by digital fingerprints and offenders will be held liable for any damages suffered. All rights and/or title to any intellectual property are reserved.

Printed copies are uncontrolled. Print date: 20200610

1001201982, P38, 000, 03, S phase Released

7.3 Performance Criteria

It is recommended that no errors should be observed during the period of 1 minute (59400 transmissions) to validate that no perturbations could affect the RF performance of any RFID DESS System.

All information contained herein is confidential and/or proprietary to Kongsberg Inc. and any unauthorized disclosure or utilization is expressly prohibited. The information is legally safeguarded by digital fingerprints and offenders will be held liable for any damages suffered. All rights and/or title to any intellectual property are reserved.

Printed copies are uncontrolled. Print date: 20200610

1001201982, P38, 000, 03, S phase Released

8 RF Compliances

Industry Canada

This device complies with RSS-GEN and RSS-210 of Industry Canada.

Cet appareil est conforme au CNR-GEN et CNR-210 d'Industrie Canada.

FCC

The following device is in compliance with FCC part 15C.

Warning to the user: Any changes /modifications not approved by the manufacturer could void the user's authority to operate the equipment.

Conformité Européenne (European Conformity):

The following device is in compliance with the following standards:

ETSI EN 300 330-2

ETSI EN 60950-1

All information contained herein is confidential and/or proprietary to Kongsberg Inc. and any unauthorized disclosure or utilization is expressly prohibited. The information is legally safeguarded by digital fingerprints and offenders will be held liable for any damages suffered. All rights and/or title to any intellectual property are reserved.