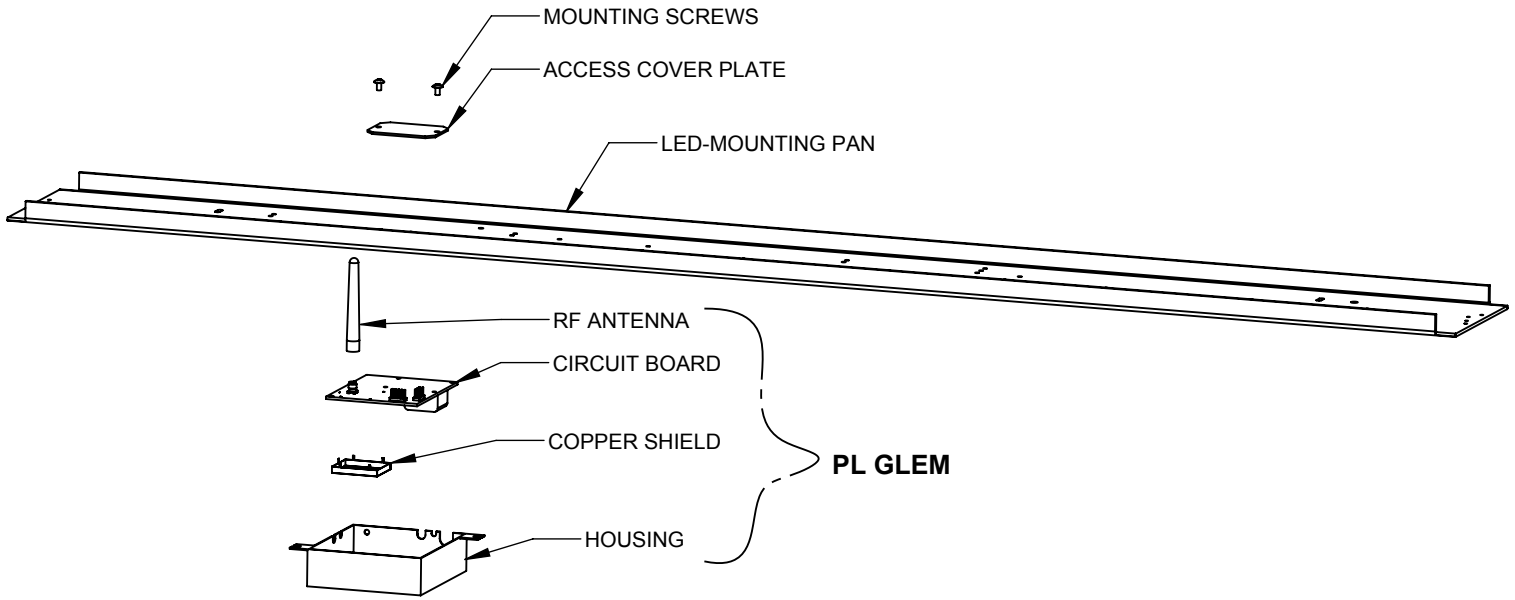


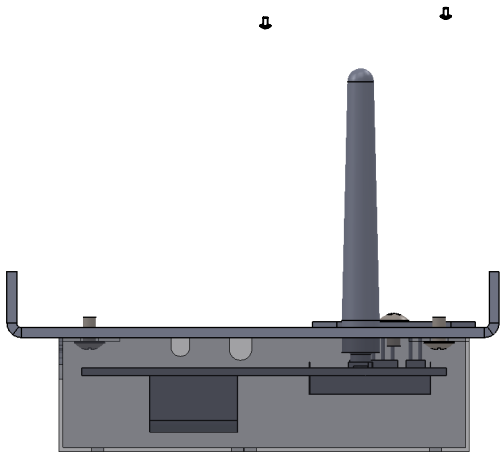

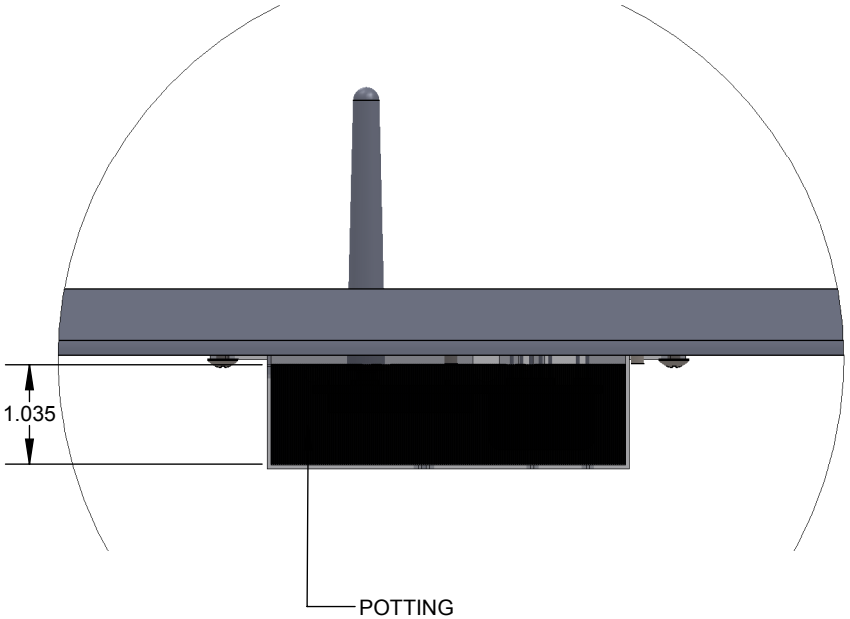


| | | | | | | | |
|---|---|---|---|---|---|---|---|
| TITLE: **PL GLEM ASSEMBLY** | MODEL NO. **PL GLEM** | UNIT: **INCHES** | | NAME: | DATE: | REV. No. | COMMENTS: |
| | | SCALE: 1:12 | DRAWN BY: | R.S | 4/15/2014 | 1 | |
| | MATERIAL: | FINISH: | | | | SHEET: 1 OF 1 | |

PROPRIETARY AND CONFIDENTIAL. THE INFORMATION CONTAINED IN THIS DRAWING IS THE SOLE PROPERTY OF PREMIER LIGHTING LTD. ANY REPRODUCTION IN PART OR AS A WHOLE WITHOUT THE WRITTEN PERMISSION OF PREMIER LIGHTING LTD. IS PROHIBITED