# AegisSecure Management System

## e-Kontos 7100

## User’s manual

# Index

**Introduction** ..... 2
**Lock Features** ..... 2
**Using an RFID Keycard** ..... 6
**Deadbolt and Privacy feature** ..... 7
**Programming Locks** ..... 8
**Low Battery Warning** ..... 9
**Reset Lock to Factory Default Settings** ..... 9

# Introduction

This manual is intended for people who program and troubleshoot locks. It covers the use of special keycards, programming and interrogating locks, and lock maintenance. Before reviewing this section, you should first become thoroughly familiar with the material covered in the Aegis 7000 Management System User's Manual. The KON is a grade 1 heavy duty RFID electronic lock with the security afforded by using Aegis 7000 Management System for an offline access management solution. The lock accepts encrypted Mifare credentials for enhanced functionality to simplify the management of the lock.

# Lock Features

**Automatic Inhibiting**
Normally, a guest room lock will be set up to operate with more than one guest Credential type (Guest keycard, Pin Codes, Alternate, backup, one shot). The lock is programmed to automatically activate inhibiting between these credential types. When a new credential is used from one of the types, it will prevent previously used credentials for the other credential types from activating the lock.

**Pin codes**
Pin codes are used as a form of credential key to allow access entry to the guest. This can be set up and through the Aegis 7000 software and ranges from 6-18 digit codes. This feature can be turned off through the Aegis 7000 software and is only used as a guest key.

**Checkout**
The checkout function is used to prevent the current Guest Credentials from entering a room. When this function is used in the Aegis 7000 software the current keys of these types will not activate the locking mechanism. This feature prevents guests who have checked out of a room from later reentering the room, and is normally used by housekeeping after the room has been cleaned.

**Passage mode schedules**
A lock can be programmed in the Aegis 7000 software to automatically unlatch or latch at specified times for each day of the week. A credential is not required to perform the unlatching and latching activities. When a lock is unlatched, a key is not required to open the door. The lock may have up to three different unlatch/latch times per week.

**Passage mode**
A credential can be programmed to latch and/or unlatch the lock. When a lock is unlatched, a credential is not required to open the door. If a credential is used, the lock will display the normal lights and will function normally. When the lock is once again latched, a valid credential is required to release the locking mechanism.

**Dead Bolt/Privacy Override**
Each type of credential can be programmed to indicate whether or not it will override the dead bolt/privacy function. Usually, one emergency credential type is programmed in the Aegis 7000 software with the capability, and is used only in emergency situations.

**Block/Unblock Function**
This function can be used in the Aegis 7000 software to temporarily prevent a specific key ID from accessing a lock or multiple locks. A specific key ID can be blocked allowing remaining key ID's in the same key group to remain functioning. The block and unblock key can be assigned to both guest and master level key groups.

**Internal Clock and Calendar**
The lock contains a clock crystal that maintains actual date and time. The time is updated every minute and the crystal automatically adjusts for changes due to daylight savings and leap year.

**Time zone in keycards**
Certain personnel keycards can be programmed to work only during certain hours of the day. When the keycard is made, the user specify the start and end times of the shift. A keycard can have only three shifts specified. If the keycard is used outside the shift times, it will not work.

**One shot**
A guest credential type can be programmed to limit the number of times a valid credential will activate the lock to one use. This determination is made in advance, and the number of times the credential will work cannot be varied. You can also program a credential expiration date and time when a credential is made. The credential will cease to activate the lock when it has been used or when it expires at the specified date and time, whichever comes first.

**Areas**
This feature is used for special locks such as pool doors, elevators or limited access doors. Locks can be programmed as areas in the Aegis 7000 software allowing certain credentials with permissions to activate the locking mechanism. This permissions to the areas can be selected during the creation of the credentials. Both, personnel and guest credentials can have permissions to areas.

**LED indicators**
If a credential does not work in a lock the light indicators to display the red LED that indicates the credential did not work. If the credential is a valid credential, the indicator lights will display the green LED and the credential will work normally. LED can also be used to display a lock that has the privacy function activated.

**Low Battery**
If the lock's batteries are low a yellow indicator light will flash when a correct credential is used before displaying the green LED and unlocking.
The low battery indicator will only be displayed in the Aegis 7000 software as an action item.

**Property entries**
This feature is used for special locks such as perimeter entrances, elevators or limited access doors. Locks can be programmed as property entries in the Aegis 7000 software, which allow valid credentials to activate the locking mechanism. This feature can be programmed in several ways: Hotel gate – These locks will allow any credential made at the property to function in the locks. Building gate –These locks will allow any credential made for the specified building to function in the locks. Floor gate –These locks will allow any credential made for the specified floor to function in the locks. The feature is programmed and functions automatically without requiring the users to set any permissions on credential.

**Audit Trail**
Audit trail determines which credential was used, when an access occurred, who owned the credential at the time of access and what action was performed. Audit trail is stored in the lock's nonvolatile memory. Displayed in the Aegis 7000 software in order of most recent event.

**Encryption** - All the data that is written on the keycards is encrypted and can only be read by the Aegis 7000 software. Also each property will have its own encrypted code to prohibit keycards of working from one property to another.

**MIFARE** - Type of technology used for contactless smart card systems. MIFARE is compliant with the international ISO 14443 Type A standard.

**Authorization**
Used to register or change the property code when installing the Aegis 7000 Management System, or if a severe security problem has occurred. The authorization keycard initializes the lock during a first-time installation. After first-time installation the authorization card prepares the lock for communication with parameter cards or DLP device.

**Door Lock Programmer** (DLP) - A handheld device containing the Aegis 7000 database information downloaded from the system. The DLP is used to program and audit locks and card readers.

## Using an RFID Keycard

1. Bring the flat surface of your keycard near the circular or rectangular RFID reader. When the keycard is close enough to be read, the Green LED will flash on the RFID reader. You will hear the lock operate.
2. The green light will begin to flash once access has been granted.
3. Turn the lever and open the door while the green LED is on.

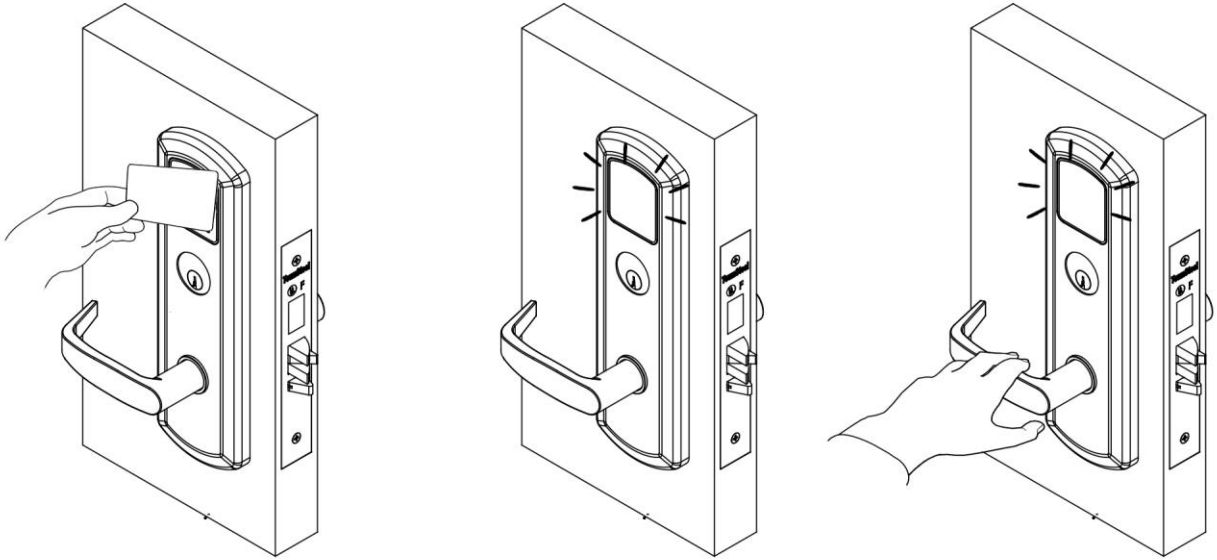

## Deadbolt and Privacy feature

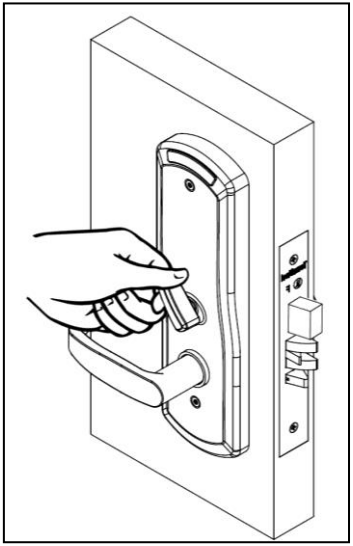

Additionally to the electronic features, the lock is also equipped with a deadbolt That can be thrown from the inside of the room. The deadbolt is set by turning the deadbolt latch to the locked position.

When the deadbolt is in the locked position, a flashing red LED will appear. If a keycard is used on the reader a red LED will flash and beep, and the door will remain locked. A keycard with the override option enabled will produce a green LED and will override the deadbolt and allow access to the room.

To unlock the lock from the inside while the deadbolt is thrown, turn the door handle. This action will retract both the latch and the deadbolt.

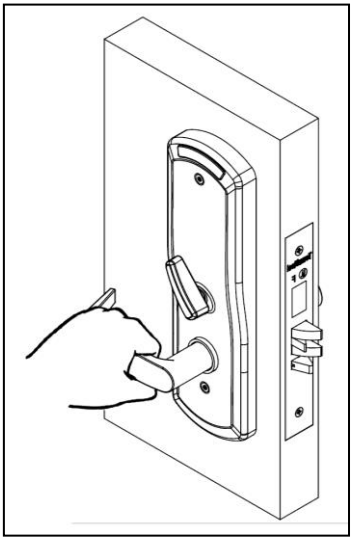

Select models of the KON have an automatic deadbolt feature that automatically projects the 1" deadbolt when the door is closed. This feature provides latching security against forced entry. Keycards require to have the DND override option enabled in order to gain access.

To open the door from the inside after the deadbolt has been thrown, simply depress the door handle. This action will override the privacy feature and allow the guest to exit

## Programming Locks

When the locks are shipped from the factory, the batteries are not installed. The locks will be fully functioning when four AA batteries are installed on a lock. After installing the batteries the locks will only be operable via construction cards since all locks are initially on factory default settings. To program the locks to accept other credentials, you must use the **Door Lock Programmer (DLP),** along with the computer that is on the same network as the locks.

**Door Lock Programmer**
The Door Lock Programmer is a handheld device containing the Aegis 7000 database information downloaded from the system. The DLP acts an interface between the lock and the Aegis 7000 Client and is used to enter lock code information directly from the computer into the lock.

The DLP connects to the computer and downloads information using a micro-USB mini-b cable. The DLP communicates with the locks using NFC communication.

**Programming locks using the Door Lock Programmer**
To program the locks using the DLP, you must first download the database information from the Aegis 7000 Client. For more information regarding downloading the database information please review the Aegis 7000 Management System User's Manual.
Once the database information is downloaded from the client to the DLP, you can disconnect the DLP from the cable and transport the DLP to the lock.

In order to program the lock you will need to have the Authorization keycard that was delivered with your copy of the Aegis 7000 Management System. Follow the steps for lock programming:

From the DLP's main menu, select option 2. Lock Functions. Four new options will appear onscreen, select 1. Program Room. The list of possible room numbers that can be programmed into the lock will appear. These room are based off of the user's database information that was downloaded into the DLP.  Select the room number and press set and follow the onscreen instructions

**Setting Date and Time**

The lock's embedded system maintains the actual date and time. The time is automatically updated every minute and the clock is automatically adjusted for changes due to Daylight Saving Time, and Leap Year. The date and time are initially updated when the DLP is used to program the door lock and it is updated when the DLP is used to interrogate the lock for audit trials. The time can be manually updated using the DLP if there are any changes needed.

For example: if the lock's batteries are disconnected for a period of time.
If the lock experiences a low battery condition.
If the lock's clock has not been updated via the DLP for a 12-month period.

## Low Battery Warning

Each lock contains batteries, which are used to power the lock's circuit board and to release the locking mechanism. The lock uses four AA alkaline batteries. Lithium batteries although long lasting, are not recommended to be used due to their lower voltage output.

The lock's batteries may need to be replaced when one of the following symptoms appear:

• A Standard keycard alternately flashes the yellow LED 5 times before the green LED flashes on the RFID reader and the lock operates.

• The DLP report indicates that the batteries are low.

If the low battery warning is displayed follow the step-by-step procedures for replacing lock batteries on each type of lock are provided in the Lock Installation Manual.

## Reset Lock to Factory Default Settings

Steps

1. Bring the flat surface of your Authorization keycard near the circular or rectangular RFID reader. When the keycard is close enough to be read, the green LED will flash on the RFID reader and beep.
2. Leave the Authorization keycard in that same position for 7 seconds. The green LED will remain solid on the RFID reader and the lock will beep two more times.

/!¦¢LhbY wL{Y hC 9·t[h{LhbLC .!¢¢9w¸L{w9t[!/95 .¸!bLb/hww9/¢¢¸t9φ 5L{th{9hC ¦{95 .!¢¢9wL9{ !//hw5LbD¢h¢I9Lb{¢w¦/¢Lhb{φ

C// ² I·NYλYƎY
¢Kλă ŜIjdzΛLJYŜyΨ KI·ă ōŜŜy˙ΨŜăΨŜŘ I·yŘ ₮2dzyŘ Ψ2 Ŏ2YLJƒè øλΨK ΨKŜ ƒΛY˙λΨă ₮2NJ I· /ƒI·ăă . ŘλƎλΨI·ƒ ŘŜØλŎŜΣ LJdzNΨăd z I·yΨ Ψ2 LJI·NΨŭ mp 2₮ ΨKŜ C// wdzƒŜăφ ¢KŜăŜ ƒΛY˙λΨă I·NŜ
ŘŜăλƎyŜŘ Ψ2 LJNΨ2øλŘŜ NŜI·ă2yI·ōƒŜ LJNΨ2ΨŜŎΨλ2y˙I·ƎI·λyăΨ KI·NYŦdzƒ λyΨŜNŦŜNŜyŎŜ λy˙I· NŜăλŘŜyΨλI·ƒ λyăΨI·ffI·Ψλ2yφ ¢Kλă ŜIjdzΛLJYŜyΨ ƎŜySNI·ΨŜăΣ dzăŜă I·yŘ ŎI·y˙NI·ŘλI·ΨŜ
NI·Řλ2 ₮NŜIjdzŜyŎè ŜyŜNƎè I·yŘΣ λ₮ y2Ψ λyăΨI·ffŜŘ I·yŘ dzăŜŘ λy˙I·ŎŎ2NŘI·yŎŜ øλΨK ΨKŜ λyăΨNdzŎΨλ2yăΣ YI·è ŎI·dzăŜ KI·NYŦdzƒ λyΨŜNŦŜNŜyŎŜ Ψ2 NI·Řλ2 2N ΨŜƒŜØăλ2y˙
NŜŎŜLJΨλ2yΣ øKλŎK ŎI·y˙ōŜ ŘŜΨŜNYλyŜŘ ōè ΨdzNyλyƎ ΨKŜ ŜIjdzΛLJYŜyΨ 2₮₮ I·yŘ 2yΣ ΨKŜ dzăŜN λă ŜyŎ2dzNI·ƎŜŘ Ψ2 ΨNè Ψ2 Ŏ2NNΨŜŎΨ ΨKŜ λyΨŜNŦŜNŜyŎŜ ōè 2yŜ 2N YΨ2NŜ 2₮ ΨKŜ
₮2ff2øλyƎ YŜI·ădzNŜăY

ω wŜ2NΨŜyΨ 2N NŜf2ŎI·ΨŜ ΨKŜ NŜŎŜλØλyƎ I·yΨŜyΨI·φ
ω LyŎNŜI·ăŜ ΨKŜ ăŜLJI·NI·Ψλ2y˙ōŜΨøŜŜy˙ΨKŜ ŜIjdzΛLJYŜyΨ I·yŘ NŜŎŜλØŜNφ
ω /2yΨŜŎΨ ΨKŜ ŜIjdzΛLJYŜyΨ λyΨ2 I·y˙2dzΨƒŜΨ 2y˙I· ŎλNŎdzΛΨ ŘλƎ₮ŜNŜyΨ ₮N2Y ΨKI·Ψ Ψ2 øKλŎK ΨKŜ NŜŎŜλØŜN λă Ŏ2yΨŜŎΨŜŘφ
ω /2yădzƒΨ ΨKŜ ŘŜI·ƒŜN 2N I·y˙ŜÈLJŜNΨŜyŎŜŘ NI·Řλ2κ¢± ΨŜŎKyΨŎλI·y˙₮2N KŜƒLJφ

/I·dzΨλ2yY !yè ŎKI·yƎŜă 2N YΨ2Řλ₮λŎI·Ψλ2yă Ψ2 ΨKλă ŘŜØλŎŜ y2Ψ ŜÈLJƒλŎλΨƒè I·LJLJNΨ2ØŜŘ ōè YI·yΨdz₮I·ŎΨdzNŜN Ŏ2dzƒŘ Ø2λŘ è2dzNI·dzΨK2NΨλΨè Ψ2 2LJŜNI·ΨŜ ΨKλă ŜIjdzΛLJYŜyΨφ
¢Kλă ŘŜØλŎŜ Ŏ2YLJƒλŜă øλΨK LJI·NΨŭ mp 2₮ ΨKŜ C// wdzƒŜăφ hLJŜNI·Ψλ2y˙λă ădzō?ŜŎΨ Ψ2 ΨKŜ ₮2ff2øλyƎ Ψø2 Ŏ2yŘλΨλ2yăY
óMΨ ¢Kλă ŘŜØλŎŜ YI·è y2Ψ ŎI·dzăŜ KI·NYŦdzƒ λyΨŜNŦŜNŜyŎŜΣ I·yŘ
óHΨ ¢Kλă ŘŜØλŎŜ Ydzăƒ I·ŎŎŜLJΨ I·yè λyΨŜNŦŜNŜyŎŜ NŜŎŜλØŜŘΣ λyŎƒdzŘλyƎ λyΨŜNŦŜNŜyŎŜ ΨKI·Ψ YI·è ŎI·dzăŜ dzyŘŜăNNŜŘ 2LJŜNI·Ψλ2yφ

¢KŜ C// ŎŜNΨλ₮λŎI·Ψλ2y˙₮2NJ ΨKλă ŘŜØλŎŜ LJŜNΨI·λyă Ψ2 ΨŜăΨλyƎ ₮2NJ wC ŜÈLJ2ădzNŜ dzyŘŜNJ ăΨI·yŘI·NŘ 2LJŜNJ·ΨλyƎ Ŏ2yŘλΨλ2yăφ ¢KŜăŜ Ŏ2yŘλΨλ2yă ăLJŜŎλ₮è ΨKI·Ψ I· LJŜNăƎ2y˙
ăK2dzƒŘ YI·λyΨI·λy˙I· ŘλăΨI·yŎŜ 2₮ y2 ƒŜăă ΨKI·y˙нл ŎŜyΨλYŜΨŜNăă ₮N2Y ΨKŜ ŘŜØλŎŜ¼ă ădzNΨI·ŎŜ I·Ψ I·ƒƒ ΨλYŜăΣ ŜÈŎŜLJΨ ₮2NJ 2ŎŎI·ăλ2yI·ƒΣ ăK2NΨπΨŜNJY λyăΨI·yŎŜă ƒI·ăΨλyƎ
I·N2dzyŘ ăŜŎ2yŘăφ ¢KŜ ŘŜØλŎŜ λă ŘŜY2yăΨNI·ΨŜŘ Ψ2 YŜŜΨ ΨKŜ C// wC 9ÈLJ2ădzNŜ NŜIjdzNNŜYŜyΨă 2dzΨƒλyŜŘ λy˙Y5 . пптпφу 2yƒè dzyŘŜNJ ΨKŜ ăLJŜŎλ₮λŜŘ Ŏ2yŘλΨλ2yăφ

*Visit* ***www.TownSteel.com*** *for more.*

17901 Railroad Street
City of Industry, CA 91748
Toll Free: 877-858-0888
Tel: 626-965-8917
Fax: 626-965-8919