Operating Manual

autonomous wheels **ezW10 and ezW300**
tiller head **ezRTH**

wireless versions

Revision B – May 2014

ez-wheel
The Electric Wheel

Index

1. Characteristics of the ez-Wheel product 4
2. Installation of the ez-Wheel product 5
   - Positioning/direction of operation 5
   - Mounting of the tiller head 5
   - Mounting of the wheel on the application 5
3. Use of the ez-Wheel product 7
   - Starting up for the first time 7
   - Use 7
   - Charging the wheel 8
   - Charging of the tiller head batteries 9
   - Versions with tyres: Changing a tyre 9
   - Versions with solid tyres 10
4. Precautions for use 10
   - Wheel maintenance 10
   - Prolonged shutdown 11
   - Precautions for use relative to the wheel 11
   - Precautions for use relative to the tiller head 11
   - Safety rules in relation to the batteries 11
   - Incorrect use 11
5. Customer Department contact 11
6. Troubleshooting 12
   - Display 12
   - Changing a tyre 12
   - Wheel malfunctioning 12
   - Tiller head malfunction 13
   - System reset procedure 13
7. Product end-of-life 13
8. Compliance with the limits for digital device 13
9. Radiation exposure limits 14
   - The wheel 14
   - The tiller head 14

Display 15
Declaration of incorporation 16
Declaration of CE conformity 16

Do not use ez-Wheel products for other purposes or in other conditions than those mentioned in the technical documentation.
Read and make sure you have understood the manual before using ez-Wheel products.
Observe all the warnings and usage instructions in this manual.
Keep this manual for reference throughout the life of the product.
In the event of loss, you can obtain a copy of this manual from the ez-Wheel Customer Department
If the product is transferred to another owner, make sure that the manual is transferred as well.
The characteristics, descriptions, and illustrations in this document are applicable at the date of publication. ez-Wheel reserves the right to make any modifications and revisions to this document. Product users obtain their own information on these modifications.

1. Characteristics of the ez-Wheel product

The range of autonomous wheels, **ezW10** and **ezW300**, enables powerful electric drive to be installed quickly and easily.

ezW10 and ezW300 wheels are controlled by the interface in the tiller head **ezRTH** via a wireless communication system.

This operating manual contains the instructions to be followed for installation, use and maintenance of ezW10 and ezW300 wheels and the ezRTH tiller head

2. Installation of the ez-Wheel product

All mechanical drawings that could serve for the installation of ez-Wheel products are available on request.

All the accessories mentioned are available in the ez-Wheel catalogue.

The wheels and the tiller heads are designed to work together according to the configuration described in the configuration sheet delivered with the equipment.

☐ Positioning/direction of operation

- Refer to the configuration sheet.
- Take the tiller head with the serial number mentioned on the configuration sheet.
- Identify the serial numbers of the wheels given on the configuration sheet.
- Prepare and position the corresponding wheels, as shown on the configuration sheet

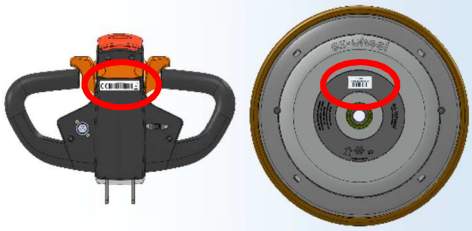

☐ Mounting of the tiller head

- The tiller head must be held by the plate situated on the back of the box.
- Fix the tiller head to the application in such a way as to ensure that it is intuitive and ergonomic for the user to handle it.

All mechanical drawings that could serve for the installation of the tiller head are available on request.

☐ Mounting of the wheel on the application

- Check that the tiller head is switched off: All lights are off.
- Inspect the general condition of the wheel and check for damage.
- Check the condition of the wheel: Press the ON/OFF zone on the wheel label and check that the light OK is green.

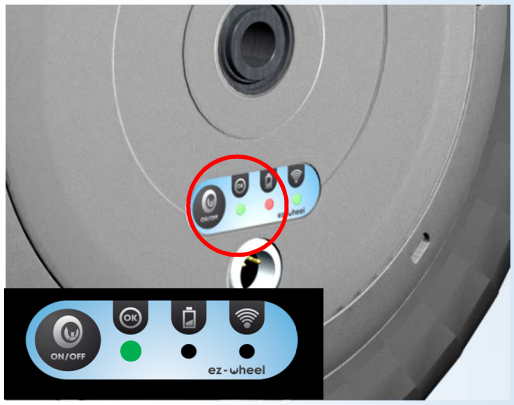

- Check that the application on which the wheel is going to be mounted has a spindle with a diameter of 16 mm, of which the length corresponds to the thickness of the wheel, for each wheel.

- Check the presence of a hexagon anti-rotation zone (XC 18 steel or equivalent hardness).

- Position the wheel on the spindle and make sure that the hexagon zone of the wheel is correctly inserted in that of the application.

- The optional ezMAR anti-rotation washer accessory can be used.

  Remove the M3 screw from the ezMAR washer with a 2.5 mm Allen key.
  - Position the hexagon zone of the ezMAR clamp on the wheel spindle. It is possible to use a mallet for this operation but the wheel spindle must not be damaged in any circumstances. Face A of the clamp should be against the wheel.
  - Tighten the M3 side screw with an Allen key to ensure that the clamp is locked around the hexagon zone.

  CHC M3x12 SCREW
  2.5 mm Allen key
  Mallet

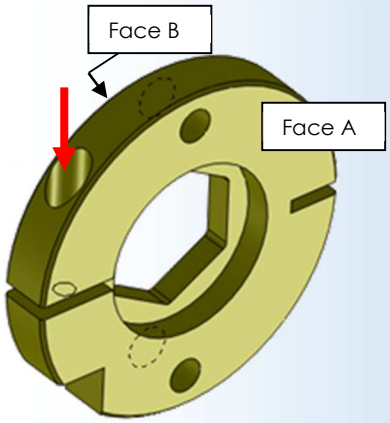

- Lock the wheel to the spindle with a screw on the side opposite the hexagon zone (or both sides of the spindle if the application is fitted with a fork or a yoke)

- Check the holding of the wheel before putting the tiller head into operation.

- Repeat this operation for each wheel if the system has several wheels.

3. Use of the ez-Wheel product

□ Starting up for the first time

- Check the condition of the wheel: Press the ON/OFF zone on the wheel label and check that the light OK is green. (The light indicates the level of charge of the battery. See "Display" appendix)

- If the application has several wheels, repeat the operation for all the wheels.

- Press the ON/OFF button on the tiller head and check that the light OK is green.

- Check that communication is established between the tiller head and the wheels: The light lights up green on the tiller head.

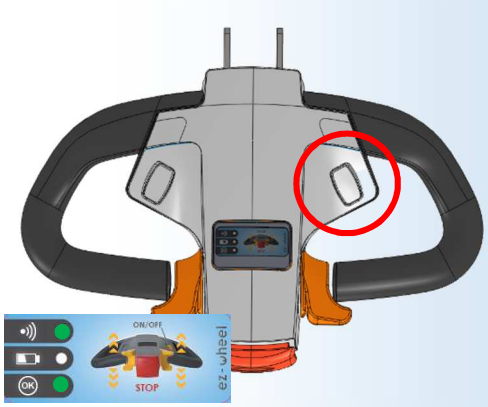

It is preferable to recharge the wheels completely before using for the first time. (See: Charging the wheel)

It is essential to charge the tiller head before using it for the first time.

If one of these steps does not take place as described, refer to "troubleshooting" or contact the ez-Wheel Customer Department.

□ Use

Motor operation is controlled by the tiller head accelerator.

- To put the tiller head into operation: Press the ON/OFF button.

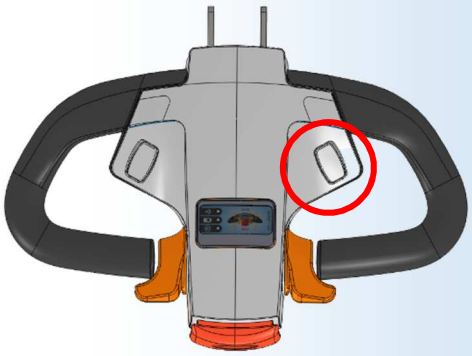

- To switch off the tiller head: Press the ON/OFF button.

The tiller head goes into sleep mode after a few minutes without movement on the accelerator to conserve battery life.

- To restart the system, press the ON/OFF button; wake-up is immediate. It is not necessary to press the ON/OFF zone of the wheel at this stage.

□ Charging the wheel

Wheels can be charged anytime as long as a mains connection is available (if necessary several times per day). It is not necessary to wait for the battery to be discharged.

- Remove the plug from the wheel connector.
- Check that the connector is not obstructed by dust collection or a foreign body. If necessary clean the connector carefully.

Never wash the connector by spraying a jet of water directly onto it. Check that the connector is perfectly dry before connecting the charger.

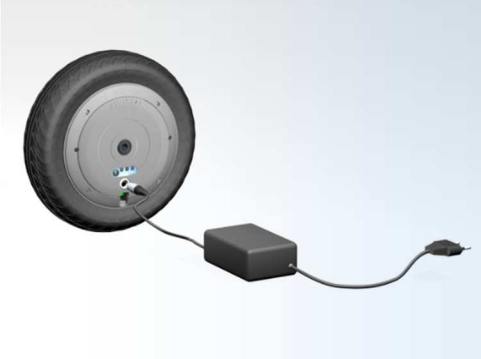

- Connect the charger to the wheel and connect the charger to the mains.
- Use a suitable charger. Contact the ez-Wheel Customer Department or a dealer for more information on this charger.

The lights on the wheel and the box should be flashing orange.

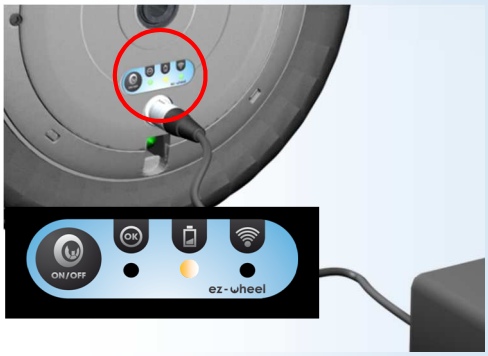

When the wheel is charged the lights on the wheel and the tiller head will be flashing green.

It is impossible to use the wheel when it is connected.

- When the wheel is charged, disconnect the charger by pressing the button on its connector and replace the plug on the wheel connector.
- To disconnect the charger connector, press in the locking lug and pull the connector.

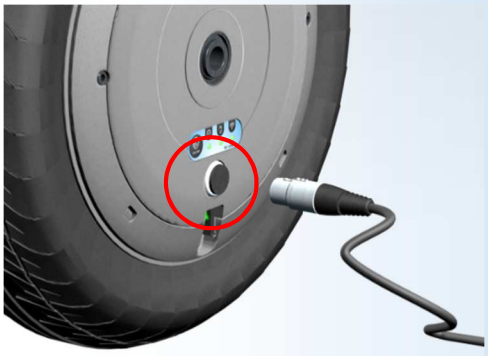

- To put the wheel into operation, disconnect the charger and switch on the tiller head by pressing the ON/OFF button.

The light on the tiller head continues to flash as long as one wheel in the system is connected to a charger.

☐ Charging of the tiller head batteries

When the light (OK) on the wireless tiller head is red, it is necessary to charge the tiller head batteries.

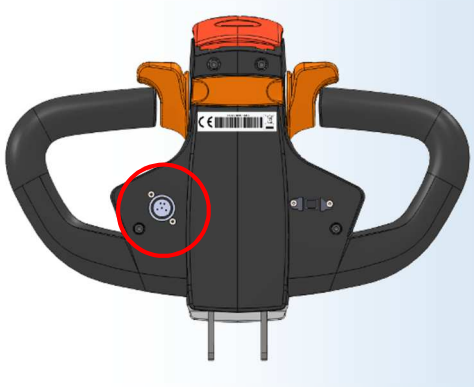

- Connect the charger to the tiller head and connect the charger to the mains.

Use a suitable charger. Contact the ez-Wheel Customer Department or a dealer for more information on this charger.

- Leave the tiller head on charge for several hours
- When the tiller head is charged, disconnect the charger by pressing the lug on its connector.

As a general rule charge the tiller head as often as possible, without waiting for the battery to be completely discharged.

☐ Versions with tyres: Changing a tyre

To replace a tyre and to check the type of tyre to be used, see the wheel datasheet. All tyres should be fitted with inner tubes.

- Check that the tiller head is switched off: all lights are off.
- Deflate the tyre completely.
- Remove the 4 screws holding the wheel rim, situated on the circumference of the wheel next to the valve
  M5x25 BHC screws
  3 mm Allen key

- Remove the two locking screws on the valve side.
  M5x18 CHC screws
  4 mm Allen key

The metal tyre retaining rim then has a little play.

- Pivot the retaining rim by hand.

- Remove the retaining rim.

- Remove the tyre and the inner tube.

- Change the tyre and the inner tube if necessary.

It is easier to fit the new tyre if the inner tube is pre-inflated.

Be careful about the direction of the newly fitted tyre: The fitting direction should correspond with the direction of movement of the application.

- Reposition the retaining rim on the hub.
- Pivot it to put it into its initial position.
- Fit the two locking screws and check that they are properly tightened.
  M5x18 CHC screws
  4 mm Allen key

- Refit the 4 rim holding screws and check that they are properly tightened.
  M5x25 BHC screws
  3 mm Allen key
- Inflate the tyre.

DO NOT INFLATE THE TYRE UNLESS THE LOCKING SCREWS ARE PROPERLY IN PLACE AND TIGHTENED ON THE HOLDING RIM.

DO NOT OVERINFLATE. THE INFLATION PRESSURE SHOULD BE BETWEEN 1.5 ET 2 BAR.

□ Versions with solid tyres

The solid tyre cannot be replaced. In the event of wear preventing the wheel being used, contact the ez-Wheel Customer Department.

4. Precautions for use

□ Wheel maintenance

The wheel does not require any maintenance other than charging. It should never be opened in any circumstances.
The wheel can be washed with a normal water hose.
Never use a high pressure cleaner.
Do not expose the connectors, the display or the labels directly to the jet. It is preferable to use a wet sponge. Do not use solvents or corrosive products.

- **Prolonged shutdown**

The wheel should be stored in a warm and dry place.
Charge the wheel before a prolonged shutdown.
Never leave an unused wheel totally discharged.
Never leave an unused tiller head totally discharged.
To put the system back into use after a prolonged shutdown, see: Starting up for the first time

- **Precautions for use relative to the wheel**

Always use a suitable charger.
Do not submerge the wheel.
Do not open the wheel.
Do not expose to a heat source.
Do not expose to fire.
Do not insert pieces of metal into the connector.
The product must under no circumstances be modified without authorisation from ez-Wheel.
Changes or modifications not expressly approved by the party responsible for compliance could void the user's authority to operate.
Do not try to change the technical performance of the wheel.
The product should not be subjected to use beyond the technical performance specified by ez-Wheel.
Inappropriate use results in cancellation of the warranty.
Opening of the wheel results in cancellation of the warranty

- **Precautions for use relative to the tiller head**

The tiller head is not waterproof. It should not be exposed to rain or running water.
Do not open the tiller head.
Do not insert pieces of metal into the connector.
The product must under no circumstances be modified without authorisation from ez-Wheel.

- **Safety rules in relation to the batteries**

The user must not open the wheel under any circumstances and does not have access to the batteries.
The tiller head contains Ni-MH batteries, which are subject to restrictions covering transport and the safety of the user. All information and regulations concerning these batteries can be supplied on request.

- **Incorrect use**

ez-Wheel cannot be held responsible in any circumstances for any loss caused to the user in the event of unreasonable or inadequate use of the product.

5. Customer Department contact

If a product appears to be faulty, contact the ez-Wheel Customer department.
(Email address: sav@ez-wheel.com).
The warranty conditions are available with the general sales conditions on the following website:
www.ez-wheel.com.

6. Troubleshooting

Only ez-Wheel Customer Department personnel are authorised to open the tiller head. Removing the safety labels on the wheel results in cancellation of the warranty.

☐ Display

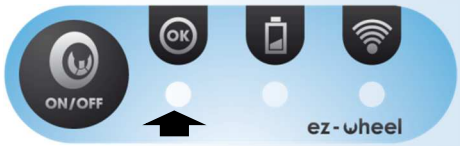

The light OK on the wheel is not green:

☒ Charge the wheel for several hours and put the system back into operation.

The light OK on the tiller head is not green:

☒ Check the condition of the lights OK on the wheels.

☒ Put the tiller head on charge

The light on the tiller head is not green:

☒ Identify which wheel in the system is not connected (its light is not green).

☒ Press the ON/OFF button of the wheel in question and check its display.

☒ Charge the wheel in question.

☒ Check that the distance between the wheel and the tiller head does not exceed a few metres.

☒ Check that the environment in which the application is situated is not subject to excessive radiation from wireless communication appliances.

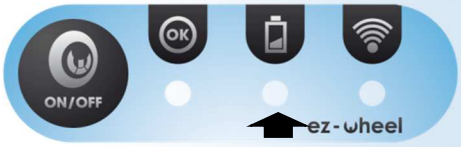

The lights, and/or , on the wheel are flashing red:

☒ Put the wheel on charge for several hours.

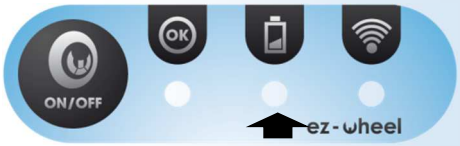

The light on the wheel does not flash although the charger is connected.

☒ Check the connections.

☒ Check the condition of the connector.

☒ Check the charger fuse, if there is one.

☒ Check the condition of the mains plug.

☒ It is possible that the wheel temperature may be too high. In this case, the wheel goes into a safety mode and cuts off the charge. Wait 10 to 20 minutes the system will operate normally when the wheel temperature has fallen.

☐ Changing a tyre

It is impossible to refit the holding rim after changing a tyre.

☒ Check for a foreign body in the holding rim lugs.

☒ Check for a foreign body in the hub lugs.

☒ Check that the holding rim has not been deformed during the operation.

☐ Wheel malfunctioning

The appearance of the wheel seems damaged.

☒ Check that no part of the wheel is missing.

☒ Check the flanges and rims for damage.

☒ Check for damage around and on the spindle.

If the product is damaged return it to the distributor or to the ez-Wheel Customer Department (wheel + tiller head).

Charging the wheel does not enable it to be used.

☒ Check that nothing is obstructing the wheel connector. If necessary clean the connector carefully.

After a long period of storage, if the system does not start, leave it on charge for several hours and follow the procedure for putting the system back into use.

☐ Tiller head malfunction

The tiller head no longer works normally.

☒ Put the tiller head on charge and follow the procedure for putting the system back into use.

In the event of a problem not described in this chapter, contact the ez-Wheel Customer Department

☐ System reset procedure

If any part of the system ceases to operate normally, and if all the previous recommendations have been checked, it is possible to reset the system.

☒ Check that the charger is not connected to the wheel.

☒ Press the ON/OFF button on the wheel label for 20 seconds.

☒ Release the ON/OFF button and connect the charger to the wheel.

☒ Leave the wheel on charge for several hours (the wheel lights will light after a few minutes).

7. Product end-of-life

When the product is at the end of its life, return it to the dealer or the ez-Wheel Customer Department (Information on the website.)

Even though it is at the end of its life, the product must be protected during transport.
Pack the equipment properly in its original packaging, or an equivalent.
If the original packaging no longer exists, place the product in a box in good condition, making sure that the equipment is perfectly wedged and close the box with adhesive tape. If more than one piece of equipment needs to be returned, group them together in a single box or group the boxes together.

8. Compliance with the limits for digital device

These equipment have been tested and found to comply with the limits for a Class A digital device, pursuant to part 15 of the FCC Rules. These limits are designed to provide reasonable protection against harmful interference when the equipment is operated in a commercial environment. This equipment generates, uses, and can radiate radio frequency energy and, if not installed and used in accordance with the instruction manual, may cause harmful interference to radio communications. Operation of this equipment in a residential area is likely to cause harmful interference in which case the user will be required to correct the interference at his own expense.

9. Radiation exposure limits

□ The wheel

This equipment complies with FCC's radiation exposure limits set forth for an uncontrolled environment under the following conditions:

- This equipment should be installed and operated such that a minimum separation distance of 20cm is maintained between the radiator (antenna) and user's/nearby person's body at all times.
- This transmitter must not be co-located or operating in conjunction with any other antenna or transmitter.

□ The tiller head

This portable equipment with its antenna complies with FCC's radiation exposure limits set forth for an uncontrolled environment. To maintain compliance, follow the instructions below:

- This transmitter must be co-located or operating in conjunction with any other antenna or transmitter.

- Avoid direct contact to the antenna, or keep contact to a minimum while using this equipment.

Display

Tiller head display:

		Green	The tiller head is working.
		Red	The tiller head batteries are discharged.
		Flashing red	One of the wheels connected to the tiller head is in a fault mode.
		Green	The wheels are charged.
		Flashing green	The wheels are charged, but one wheel in the system is connected to the charger. It is impossible to use the system.
		Orange	One of the wheels in the system is at half charge.
		Flashing orange	One of the wheels in the system is at half charge.
		Red	One of the wheels in the system is below 1/3 of its total charge.
		Flashing red	One of the wheels is completely discharged. It is impossible to use the system. Charging is necessary.
		Green	The tiller head communicates with all the wheels in the system
		Red	The tiller head is not connected.

Wheel display:

		Green	The wheel is working.
		Red	Fault
		Green	The wheel is charged.
		Flashing green	The wheel is charged, but it is connected to the charger. It is impossible to use it.
		Orange	The wheel is at half charge.
		Flashing orange	The wheel is charging.
		Red	The wheel is below 1/3 of its total charge.
		Flashing red	The wheel is completely discharged. It is impossible to use the system. Charging is necessary.
		Green	The wheel communicates with the tiller head.
		Red	The tiller head is not connected.
		Flashing red	The wheel is completely discharged. The communication between the wheel and the tiller head is deactivated.

Declaration of incorporation

In our quality as manufacturer, we

ez-Wheel SAS
Rue Jean Doucet
16470 Saint Michel
France

declare that the ezW10/ezW300 product is a partly completed machine within the meaning of the machinery directive 2006/42/EC.

This product is intended to be incorporated into an application, and cannot under any circumstances be put into operation before this application has been declared compliant to the requirements of directive 2006/42/EC.

Issued in St Michel, on 29/04/2011.

Jérôme Pénigaud, President,

Declaration of CE conformity

In our quality as manufacturer, we

ez-Wheel SAS
Rue Jean Doucet
16470 Saint Michel
France

declare that the ezW10 product complies:

with the regulatory requirements defined by directive 1999/5/ECcovering radio equipment and telecommunications terminal equipment and mutual recognition of their compliance.

with harmonised standards:
EN 301 489 - 17 v 2.1.1
EN 61 000 - 4-2
EN 61 000 - 4-3
EN 55 022
EN 300 328 v 1.7.1

with non-harmonised standards:
EN 15 194 - §4.1, 4.2.1,4.2.2, 4.2.3

Issued in St Michel,29/04/2011

Jérôme Pénigaud, President,

- IMPORTANT -

READ BEFORE USING

In order to optimise the electricity consumption of your wheel and not damage the integrity of the batteries, we have included a mode which totally deactivates your system beyond one week of non-use.

For any system remaining inactive for at least this duration, before any use of your application involving rotation of the wheels, **even without electrical assistance**, it is essential that you put the system back into operation **by pressing the ON/OFF zone** on the wheel label.

If your system has more than one wheel, **perform the operation on all the wheels**.

Always charge the wheel before a prolonged shutdown.
Never leave an unused wheel totally discharged.

The packing box and foam
used for ez-Wheel products are recyclable.

www.ez-wheel.com
SIREN registration number 518704887 -VAT No. FR30518704887 APE no. 2711Z