6+
YEARS

RC STUNT CAR

Product: RC WHIRL BIG WHEEL STUNT CAR

INSTALLING BATTERIES IN THE TRANSMITTER:

1 - Open the battery compartment.
2 - Insert 2 x 1.5V AA batteries with correct + and - polarities.
3 - Close the cover.

Figure 1

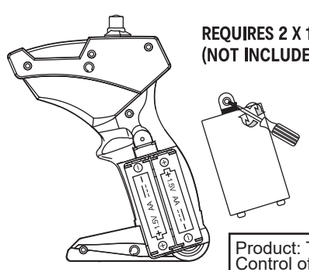

REQUIRES 2 X 1.5V AA BATTERIES (NOT INCLUDED).

Product: The Remote Control of RC WHIRL BIG WHEEL STUNT CAR

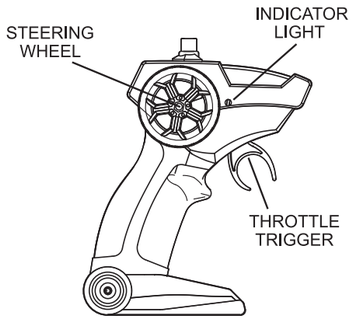

LITHIUM BATTERY CHARGE INSTRUCTIONS:

Attention: Do not charge battery immediately after each play, let the battery cool down for a while. Turn off the vehicle switch before charging.

1. Turn off vehicle and open the battery compartment.
2. Plug the large end of USB cable into a 5Vd.c. 2A charger (not supplied) or USB port only.
3. The vehicle indicator light will light up and will be solid when charging. When it finishes charging, the vehicle indicator light extinguishes.

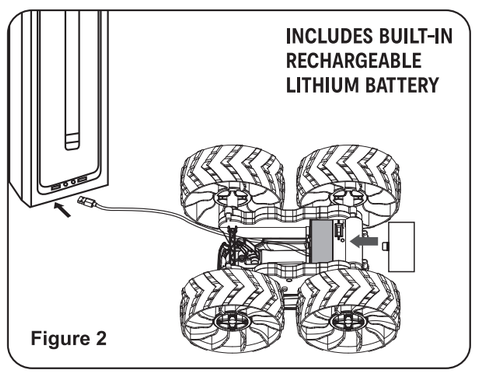

Figure 2

HOW TO USE:

1. Turn on the vehicle first and then turn on the transmitter.
2. Pull the trigger of the transmitter to match the vehicle.
3. When the vehicle is functioning, that means they are matched.
4. If you have more than two vehicles, please pair one by one. When the second vehicle is pairing, please always keep the first vehicle and transmitter on.
5. Please turn off both the vehicle and transmitter and re-start all pairing processes if you are changing to play with another 2.4GHz transmitter.
6. How to move forwards or backwards:
   Pull the throttle trigger, the vehicle will move forwards.
   Push the throttle trigger, the vehicle will move backwards.
7. Turn left or right:
   Turn steering wheel clockwise, the vehicle will turn right.
   Turn steering wheel anticlockwise, the vehicle will turn left.

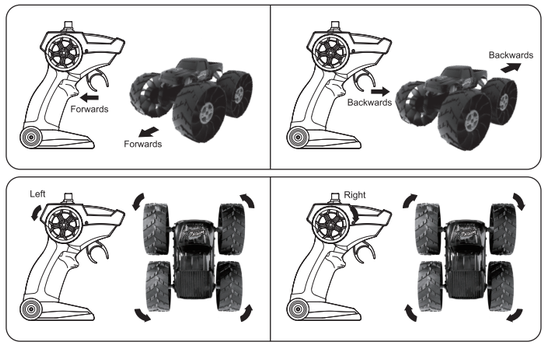

HOW TO FLIP OVER:

Push or pull the throttle trigger, when the vehicle hits an obstacle at high speed, the vehicle will flip over.
Pull the throttle trigger, when the vehicle runs in high speed, then quickly push the throttle trigger for the vehicle to flip over.
Note: It is not recommended to drive the vehicle on carpet when you perform the flip function.

WARNING: THIS TOY PRODUCES FLASHES THAT MAY TRIGGER EPILEPSY IN SENSITISED INDIVIDUALS.

⚠ **WARNING:** CHOKING HAZARD-SMALL PARTS. NOT SUITABLE FOR CHILDREN UNDER 3 YEARS.

PRODUCT MAY VARY FROM THE IMAGE SHOWN.
PLEASE KEEP PACKAGING FOR FUTURE REFERENCE.
READ THE INSTRUCTIONS BEFORE OPERATING THE PRODUCT.
PERFORMANCE TIPS: DO NOT DRIVE THE VEHICLE THROUGH WATER.
DO NOT DRIVE THE VEHICLE INTO ANY HARD OBJECT.

2.4GHz

WARNING: BATTERIES ARE TO BE INSERTED WITH THE CORRECT POLARITY (+ AND -). DO NOT MIX DIFFERENT TYPES OF BATTERIES OR NEW AND USED BATTERIES. NON-RECHARGEABLE BATTERIES ARE NOT TO BE RECHARGED. RECHARGEABLE BATTERIES ARE ONLY TO BE CHARGED UNDER ADULT SUPERVISION. THE SUPPLY TERMINALS ARE NOT TO BE SHORT-CIRCUITED. REMOVE BATTERIES FROM THE TOY WHEN NOT IN USE FOR AN EXTENDED TIME OR WHEN BATTERIES BECOME EXHAUSTED. BATTERY INSTALLATION BY AN ADULT IS REQUIRED. DISPOSE OF BATTERIES RESPONSIBLY. DO NOT DISPOSE OF IN FIRE.

WARNING: THE BATTERY CHARGER USED WITH THE ELECTRIC TOY SHALL BE REGULARLY EXAMINED FOR DAMAGE TO THE SUPPLY CORD, PLUG, ENCLOSURE OR OTHER PARTS, AND IN THE EVENT OF DAMAGE, IT SHALL NOT BE USED UNTIL THE DAMAGE HAS BEEN REPAIRED.

WARNING: FOR SAFETY REASONS, REMOVE ALL TAGS, LABELS, AND PLASTIC FASTENERS BEFORE GIVING THIS TOY TO YOUR CHILD.

WARNING: THE TOY IS ONLY TO BE CONNECTED TO CLASS II EQUIPMENT BEARING THE SYMBOL.⧈

WARNING:

FCC Statement

1. This device complies with Part 15 of the FCC Rules. Operation is subject to the following two conditions:
(1)This device may not cause harmful interference.
(2)This device must accept any interference received, including interference that may cause undesired operation.

2. Changes or modifications not expressly approved by the party responsible for compliance could void the user's authority to operate the equipment.
Note: This equipment has been tested and found to comply with the limits for a class B digital device,pursuant to Part 15 of the FCC Rules. These limits are designed to provide reasonable protection against harmful interference in a residential installation.
This equipment generates uses and can radiate radio frequency energy and,if not installed and used in accordance with the instructions,may cause harmful interference to radio communications.However,there is no guarantee that interference will not occur in a particular installation.if this equipment does cause harmful interference to radio or television reception,which can be determined by turning the equipment off and on,the user is encouraged to try to correct the interference by one or more of the following measures:

- Reorient or relocate the receiving antenna.
- Increase the separation between the equipment and receiver.
- Connect the equipment into an outlet on a circuit different from that to which the receiver is connected.
- Consult the dealer or an experienced radio/TV technician for help.

The device has been evaluated to meet general RF exposure requirement,This equipment should be installed and operated with a minimum distance of 20 cm between the radiator and your body.
(For Product: RC WHIRL BIG WHEEL STUNT CAR)

The device has been evaluated to meet general RF exposure requirement. The device can be used in portable exposure condition without restriction.
(For Product: The Remote Control of RC WHIRL BIG WHEEL STUNT CAR)