Electrify your ride.

RIDE RIGHT - WEAR A HELMET WHEN YOU RIDE

Conduce con cuidado: usa siempre casco cuando montes en bicicleta

OWNER'S MANUAL

ELECTRIC SKATEBOARD

THIS MANUAL CONTAINS IMPORTANT SAFETY, PERFORMANCE AND MAINTENANCE INFORMATION. READ THE MANUAL BEFORE TAKING YOUR FIRST RIDE OR ALLOWING YOUR CHILD TO RIDE YOUR NEW ELECTRIC SKATEBOARD. KEEP THE MANUAL HANDY FOR FUTURE REFERENCE.

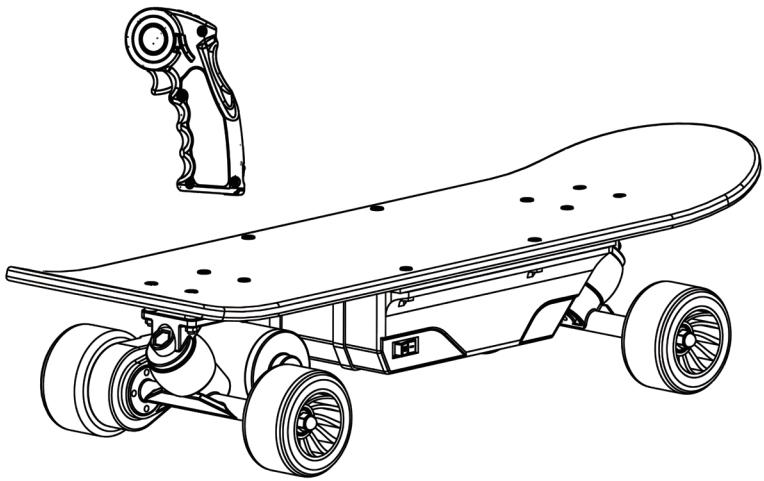

STOP

DO NOT RETURN TO STORE!
QUESTIONS OR COMMENTS?
1-800-288-1560

FOR AGES EIGHT AND UP
MAXIMUM WEIGHT: 145 lbs. (65.5 kgs.)

NOTE: Illustrations in this Manual are for reference purposes only and may not reflect the exact appearance of the actual product. Specifications are subject to change without notice.

TABLE OF CONTENTS

1. Introduction, Safety and Warnings 2
2. Carton Contents 6
3. E-Skateboard Parts 7
4. Before You Ride 8
5. Getting Started 10
6. Regular Maintenance and Repair 13
7. Troubleshooting Guide 16
8. Warranty 20

INTRODUCTION, SAFETY, AND WARNINGS

ABOUT THIS MANUAL: This Manual was written to help you get the most performance, comfort, enjoyment and safety when riding your new electric skateboard. It is important for you to understand your new electric skateboard. By reading this manual before you or your child go out on your first ride, you will know how to get the most from your new electric skateboard. It is also important that you or your child's first ride on your new electric skateboard be in a controlled environment, away from cars, obstacles, and other riders.

⚠ GENERAL WARNING:

Riding an electric skateboard can be a dangerous activity, even under the best of circumstances. Proper maintenance of your new skateboard is your responsibility and helps reduce the risk of injury. Certain conditions may cause components to fail without fault of the manufacturer. The skateboard can and is intended to move and it is therefore possible to lose control, fall off and/or get into dangerous situations that no amount of care, instruction or expertise can eliminate. If such a thing does occur, you can become seriously injured or die, even when using safety equipment and other safety precautions.

RIDE AT YOUR OWN RISK AND ALWAYS USE COMMON SENSE.

This manual contains many warnings and cautions concerning the consequences of failing to inspect, maintain or properly use your electric skateboard. Because any fall can result in serious injury or even death, we do not repeat the warning of possible serious injury or death each time such a possibility is mentioned in this manual or the risk of falling leads to a warning.

ALWAYS USE PROPER SAFETY EQUIPMENT AND RIDING ATTIRE

Always use appropriate safety equipment, such as a helmet, elbow pads, knee pads, gloves, and wrist guards. A helmet is not only a good idea but may be legally required in your community. To protect yourself or your child, the helmet must meet CPSC, 16 CFR 1203 and ASTM F1492, requirements and be worn correctly:

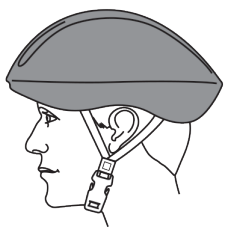

CORRECT FITTING – MAKE SURE YOUR HELMET COVERS YOUR FOREHEAD.

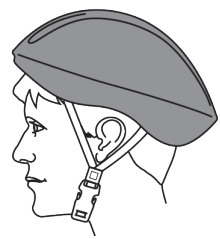

INCORRECT FITTING – FOREHEAD IS EXPOSED AND VULNERABLE TO SERIOUS INJURY.

Always wear appropriate clothing and shoes, including long sleeved shirts and long pants and lace-up or similar shoes with rubber soles. Never ride barefoot or in sandals and make sure that shoelaces or other fasteners are tied and kept away from the wheels and drive system of the skateboard.

RIDER USE AND REQUIRED PARENTAL SUPERVISION

RIDERS MUST NOT EXCEED THE WEIGHT LIMIT OF 145 pounds (65.5kg).

The age grade for the skateboard is for ages 8 and older. Just because someone is within the age and weight limitations specified for the skateboard, does not mean that his/her size is appropriate to fit or maintain control of the skateboard or that he/she is capable of safely operating the skateboard. You are the best judge of whether you or your child can safely operate the skateboard; this includes determining whether your child is at the appropriate developmental stage for safe use of the skateboard. Any rider that is unable to fit comfortably on the skateboard should never attempt to ride it. A parent's decision to allow their child to use the skateboard should be based on the child's maturity, skill and their ability to follow rules. Keep this skateboard away from small children and remember that it is intended for use only by persons who are, at a minimum, able to comfortably and safely operate the skateboard.

Children operating the skateboard should be supervised by an adult at all times. Parents should ensure that children only use the skateboard safely and within their age and physical limits.

This manual contains very important safety information. It is your responsibility to completely review this information and make sure that all riders understand all of the warnings, cautions, instructions and safety topics addressed in this manual and to assure that all riders are able to safely and responsibly use the skateboard. You should periodically review and reinforce all information in this manual with all riders, especially children. You should also regularly inspect and maintain your skateboard to insure the safety of all riders. Make sure that your new skateboard is properly fitted to any child riding it; that it is in good repair and safe operating condition; that you and your child have gone over the use, operation and safety information in this manual; that you and your child have learned and understand what to do and what not to do with your new skateboard, including observing all applicable laws, rules and common sense.

Children should be made aware of all possible riding hazards and correct riding behavior before they ride the skateboard! Please explain the following to them as often as necessary.

SAFE RIDING PRACTICES AND WARNINGS

- Check and obey all local laws or regulations which may be in effect in the locations where the electric skateboard may be used.
- Always wear a helmet, elbow and knee pads, and other safety equipment and appropriate clothing and shoes. Always keep the chin strap on the helmet securely buckled.
- Observe the age and weight limitations on the cover of this manual.

- Children must be supervised by an adult to be safe.
- Always be alert and ride your skateboard defensively. Watch out for obstacles that could catch one of the skateboard's wheels or force you to turn suddenly and/or lose control. Be careful to avoid pedestrians, persons using other wheeled products (including roller or in-line skates, skateboards, scooters, bikes, etc.), children or animals who may enter your path. Always respect the rights and property of others.
- Do not activate the skateboard unless you are in a safe, outdoor environment that is suitable for riding your electric skateboard.
- Do not attempt or perform any stunts or tricks on the electric skateboard. The skateboard is not made to withstand abuse from jumping, curb grinding or any other type of misuse or stunting.
- Do not ride on ramps, half pipes or empty swimming pools.
- Do not touch the motor on the skateboard when in use or directly after use as these parts can become extremely hot.
- Never allow more than one person to ride the skateboard at one time and never try to tow anything.
- Do not use near steps, water, or swimming pools.
- Do not ride in wet or icy weather.
- Never immerse the skateboard in water; electrical and drive components could be damaged by water or create other potentially unsafe conditions.
- Keep your fingers and other body parts away from the wheels and all other moving components.
- Do not ride while using a cell phone or other electronics or while wearing headphones.
- Never hitch on to another vehicle or let yourself be pulled or pull anyone or anything while riding the skateboard.
- Ride only on smooth, flat, dry surfaces such as pavement or level ground without loose debris, such as sand, leaves, rocks or gravel. Water, mud, ice, bumpy, uneven, slick, or rough surfaces could impair traction and contribute to possible loss of control. Never ride uphill or downhill which could cause loss of control.
- Do not ride on hills and avoid excessive speed.
- Avoid sharp turns, bumps, drainage grates, and other obstacles.
- Inspect the skateboard regularly and remove any sharp edges created through use.
- Do not ride at night or where there is limited visibility.
- Do not ride indoors or on surfaces that could become damaged such as carpet or flooring.
- Do not ride on streets, around cars, or in foot or vehicle traffic.
- Regularly check the skateboard and its components. If any parts are broken or worn, do not ride the skateboard until you have fixed or replaced the broken or worn parts.
- Units shall not be operated to perform racing, stunt riding, or other maneuvers, which may cause loss of control, or may cause uncontrolled operator/rider actions or reactions.
- Do not allow hands, feet, hair, body parts, clothing, or similar articles to come

in contact with moving parts, wheels, while the motor is running.

- Before each cycle of operation, the operator shall perform the preoperation checks specified in this manual and/or by the manufacturer, including:
- That all guards and pads originally supplied by the manufacturer are in proper place and in serviceable condition;
- That the area that the unit is to be operated in is safe and suitable for safe operation;
- That all safety labels are in place and understood by everyone, including the rider;
- That any and all axle guards or other covers or guards supplied by the manufacturer are in place and in serviceable condition; and
- That tires/wheels are in good condition.
- Operators/riders shall adhere to all manufacturer's recommendations and instructions, as well as comply with all laws and ordinances, including:
- Operating the unit only with adequate daylight conditions of visibility; and
- Persons with the following conditions shall be cautioned not to operate the skateboard.
- Those with heart conditions;
- Pregnant women;
- Persons with head, back, or neck ailments, or prior surgeries to those areas of the body; and
- Persons with any mental or physical conditions that may make them susceptible to injury or impair their physical dexterity or mental capabilities to recognize, understand, and perform all of the safety instructions and to be able to assume the hazards inherent in the use of the skateboard.
- Operators/riders always shall use appropriate protective clothing, including but not limited to a helmet, with appropriate certification, and any other equipment recommended by the manufacturer.
- Avoid sharp bumps, drainage grates, and sudden surface changes.
- Do not modify the skateboard, especially in any way that could impair safety
- Be sure to check self-locking nuts and other self-locking fasteners and fixings regularly to ensure that they have not become loose over time. If they have become loose, tighten or replace them with approved parts as needed.

⚠ **WARNING:** Skateboarding can be dangerous.

- Learn how to operate and ride your new electric skateboard and everything about skateboarding gradually. Do not perform tricks or other dangerous maneuvers on your electric skateboard. If you begin to lose your balance while riding the skateboard, don't wait until you fall, step off and start again. Avoid hills and inclines; ride on flat, level and smooth surfaces only. Ride only so fast such that your speed allows you to step off the board without falling;
- Most serious skateboard injuries involve broken bones, so learn how to fall to avoid injury (by rolling if possible for example) without the skateboard first;
- Parental supervision is encouraged, especially for younger riders. Older skateboarders starting to learn should always learn with a friend or parent.
- Be conscious of your surroundings when riding your skateboard; before you jump off of the skateboard watch where it might go and avoid having it hit and possibly injure someone else;

- Consider joining a club in your area and learning more about skateboarding safely; Prove you are a good skateboarder; be conscientious and take care of yourself and others.

PRE-RIDE SAFETY CHECKLIST

- Check to make sure that all components are properly secured and are functioning according to the manufacturer's specifications.
- Components must be maintained and repaired and only with the manufacturer's authorized replacement parts. Installation should be performed only by qualified personnel.

USING THE CHARGER

The charger should be examined regularly for damage to the cord, plug, enclosure and other parts. In the event such damage has occurred, the skateboard should not be charged until the charger has been repaired by qualified personnel or replaced.
Use only the supplied, recommended charger.
Always use caution when charging.
The charger is not a toy and should be operated by an adult.
Never operate the charger near flammable materials or liquids, and operate the charger in well-ventilated areas.
Disconnect the charger and unplug it from the skateboard when not in use.
Do not exceed the recommended charging time.
Always disconnect the charger from the skateboard prior to wiping down or cleaning the skateboard with any liquid.

FAILURE TO HEED THE WARNINGS LISTED ABOVE INCREASES RISK OF POTENTIALLY SERIOUS INJURY. USE THE APPROPRIATE CAUTION WHEN RIDING AND ALWAYS WEAR PROTECTIVE GEAR.

Carton Contents

1 wireless electric skateboard, fully assembled
1 hand-held wireless remote control
1 Battery charger
1 owner manual

Note: To function the remote control one 9V alkaline battery is needed, which is not included with the product.

Specifications

Rider Capacity	145 lbs	Dimensions	800x270mm
Range	up to 6.21 miles on flat surfaces	Net weight	18 lbs.
Motor	24V DC / 150W	Battery:	2*DC12V/4.5AH
Charger:	Input - AC100-240V,50/60HZ Output 24V DC / 600MA	Controller	Wireless, handheld type

- Three position speed switch
- Wireless handheld controller for 3-speeds acceleration
- Torsion trucks

Remember: ALWAYS ride within your limits and comfort zone and NEVER ride without protective gear!

⚠ WARNING: DO NOT USE NON-ORIGINAL OR NON-RECOMMENDED PRODUCTS WITH YOUR ELECTRIC SKATEBOARD. Altering of the original components or the use of non-recommended replacement parts may or may not be compatible with the design and will void the warranty and may cause an unsafe condition resulting in serious injury or death.

E-SKATEBOARD PARTS

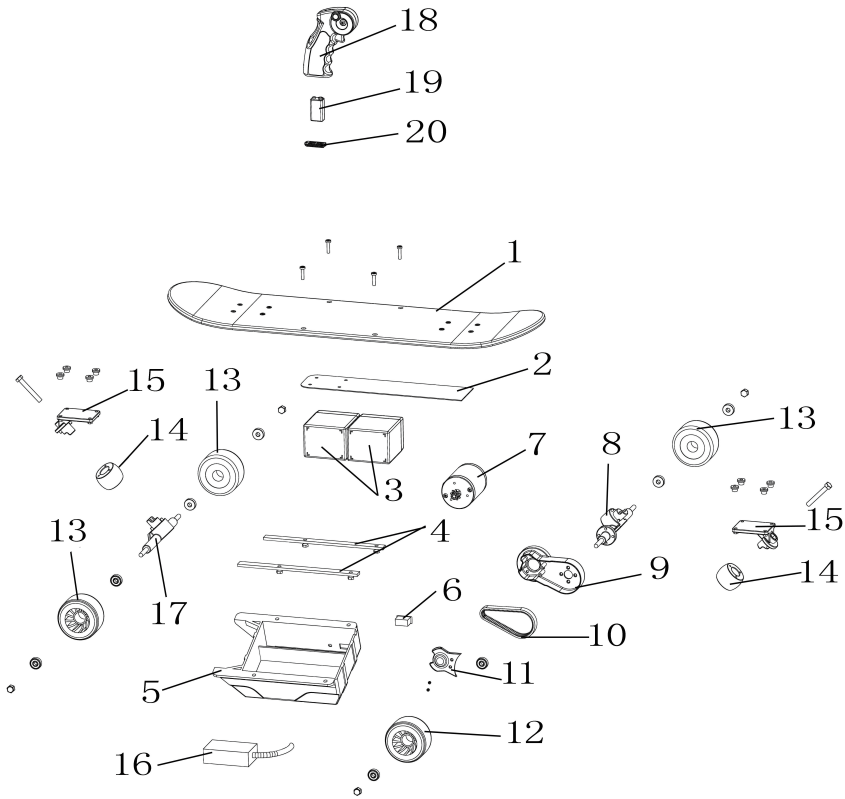

Part	Description	Part	Description
1.	Maple Deck	11.	Belt Enclosing Cover
2.	Foam Pad	12.	Driven Wheel
3.	Group Battery	13.	Wheels
4.	Battery Retainers	14.	Cushion
5.	Battery Box	15.	Truck Fixer
6.	ON/OFF Switch	16.	Controller
7.	Motor	17.	Front Truck
8.	Rear Truck	18.	Remote Control
9.	Belt Casing	19.	9V Battery (not included)
10.	Belt	20.	Battery Cover (For Remote Control)

BEFORE YOU RIDE

Battery

Always make sure the power switch is in the “off” position whenever the skateboard is not in use. Never store the product in outdoor conditions, never store it in the rain, and never store the product in freezing or below freezing temperatures. These low temperatures will permanently damage the battery.

⚠ **WARNING:** A Skateboard that does not work properly can cause you to lose control and fall. Inspect the entire skatboard thoroughly before every ride, and do not ride the skatboard until any problem has been corrected.

Read All Instructions Carefully Before Use

Skateboarding is a popular recreational activity. However, as with most sports there are certain risks and dangers involved in skateboarding and roller skating activities, including skating itself, riding, assisting, and observing. Skateboarding may be regulated by state and/or local laws, which vary by location. Local laws should be consulted for specific requirements in your area.

WARNING! Any person who participates in or assists in skateboarding assumes the known and unknown inherent risks in skateboarding activities and is legally responsible for all damages, injury, or death to himself or herself or other persons or property which result from these activities.

As a rider or active skateboarding spectator you are responsible for:

- Acting within the limits of your ability and the purpose and design of the equipment used.
- Maintaining control of yourself and the equipment you use.
- Refraining from acting in any manner which may cause or contribute to death or injury to yourself or others.

ELECTRIC SKATEBOARD SAFETY WARNINGS

WARNING! WEAR A HELMET AND PROTECTIVE SKATEBOARD RIDING GEAR AT ALL TIMES!
This includes elbow and knee pads, wrist guards, protective eyewear, long pants and long shirts or outerwear to protect the rider.

The combination of power and weight make your Electric Skateboard a potentially hazardous device. Improper use can result in property damage, serious injury or even death. Understanding all of its features and controls is key to safe riding.

OUR ELECTRIC SKATEBOARDS ARE DESIGNED FOR USE BY THOSE 8 AND OLDER AND SHOULD NOT BE USED WITHOUT ADULT SUPERVISION.

Maximum recommended weight for the rider is 145 lbs.

This board should be operated by only one rider at a time.

Avoid uneven surfaces, potholes, surface cracks and obstacles. Always ride at a safe speed, maintaining full control over the board at all times. Know your limits and ride within them. Adult supervision is strongly recommended.

This board does not conform to Federal Motor Vehicle Standards and is not intended for operation on public streets, roads or highways. Serious injury can result from unsafe operation of this vehicle. The operator can minimize these assumed risks by wearing safety equipment. Always check your state and local laws before using in public areas.

DO NOT OPERATE THE ELECTRIC SKATEBOARD IN TRAFFIC OR ON WET, FROZEN, OILY OR UNPAVED SURFACES, OR NEAR PEOPLE OR OTHER VEHICLES.
The user of this product and the adult supervisor assumes all risks associated with its use. To minimize these assumed risks, the user must wear a safety helmet, protective eye wear, appropriate footwear, knee and elbow protection at all times. Do not operate your ELECTRIC SKATEBOARD in crowded areas.
Be aware that radio signal interference could occur in your riding area.

Key Features of Your Electric Skateboard

Your Electric Skateboard is a state-of-the-art electric-powered skateboard offering the following features:

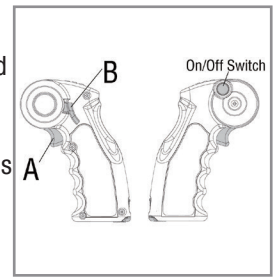

3 Speed Control

After turning the power "ON", you start and control your skateboard by holding the trigger "A", the skateboard will run at low speed now. (1 display light will be shown)

While holding trigger "A", pressing the Gear Button "B"downwards onetime increases your speed to medium speed. (2 display lights will be shown).

Pressing the Gear Button "B" downwards one more time will increase your speed to high speed. (3 display lights will be shown)

Release the trigger A, your skateboard will stop.

Note: If at any speed, you release the Trigger A suddenly, for any reason drop the controller or the controller battery dies out, the skateboard may stop immediately, posing a potential risk of a fall and thus serious injury or even death. Always hold on to the controller securely. Please refer to and follow the instructions and warnings concerning maintenance of the controller battery on p. 11. After a stop from any speed, you will have to start out in Low Speed.

Universal and Selective Controller

Our wireless remote controller is universal - it can be used with any of the same model/specification skateboard.

Our wireless remote controller is selective - when our Electric Skateboard controller is controlling a skateboard, other controllers cannot interfere.

Skateboard and Remote Control Automatic Shutoff

Both the board and the wireless remote control have automatic shutoff protection to preserve the batteries in each unit should you forget to turn off either. (Units shut off after about 5 minutes of non-use.)

Preparation

1. Inspect outer carton for damages; open carton and inspect for internal damage. Report any damage to your freight carrier or dealer.
2. Remove your new Electric Skateboard, remote control and charger. Plug charger into wall and the Electric Skateboard will begin the charging process. Lights on the charger will turn from red to green when a full charge is attained.
3. Insert one 9V alkaline battery (not included) into your remote control, and make sure it is securely mounted.
4. Be sure that you are thoroughly familiar with all of the features and controls discussed in this manual before you ride.
5. All safety equipment should be worn at all times when on the board – even when riding for short distances or durations! Make sure that the area in which you plan to ride is paved, level, free of obstacles, clear of power lines, radio antennas, and is not crowded.

Getting Started

Before riding your new Electric Skateboard, please be sure you fully understand how your board operates.

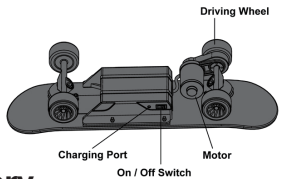

Charging the Battery

Your electric skateboard may not have a fully charged battery. Therefore it is a good idea to charge the battery prior to use.

Initial charge time: 18 hours, and never charge the battery longer than 30 hours.

Recharge time: up to 12 hours, and never charge the battery longer than 30 hours. When the scooter is not in regular use, recharge the battery at least once a month until normal use is resumed.

Average battery life: 250 charge/discharge cycles

1. Turn power OFF before charging. Plug the charger into the charger port on the electric skateboard.

Note: Be sure to properly align the groove on the charger input plug with the corresponding socket on the case; otherwise, no charging action will occur.

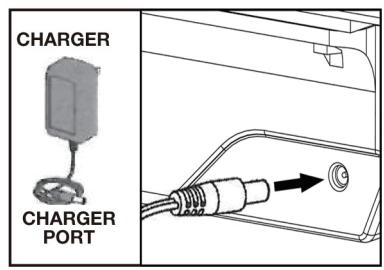

2. Plug the charger into a wall power outlet. The light on the charger housing should illuminate. A red LED light indicates the battery is charging and a green LED indicates the battery is fully charged. (If the lights on the charger do not light up, check the power to the outlets. If necessary, try a different electrical outlet.)

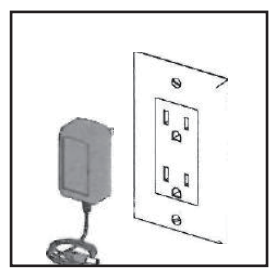

⚠ **WARNING:** Rechargeable batteries are only to be charged under adult supervision. Always disconnect your skateboard from the charger before cleaning with liquid.

NOTE:

- Turn off power switch when not in use.
- Batteries may become damaged and could no longer accept a charge if switch is left in the ON position when not in use.
- Fully charge the battery before storage.

NOTE: Failure to recharge the battery at least once a month may result in a battery that will no longer accept a charge.

Note: If your charger does not look like the one illustrated, your unit has been supplied with an alternative charger. The specifications and charging procedure would not change. The charger has a small window with one LED or two LEDs to indicate the charge status. Refer to the illustration on the charger unit for the actual “charging” and “charged” status indications for your model charger. Chargers have built-in overcharge protection to prevent the battery from being over-charged. The charger will get warm during use. This is normal for some chargers and is no cause for concern. If your charger does not get warm during use, it does not mean that it is not working properly.

⚠ WARNING: Charging produces explosive gases. Charge battery in a well ventilated area, away from sparks, flames, smoking and combustibles.

Installation of Remote Control Battery:

Insert one 9V alkaline battery (not included) into your remote control as shown.

A. Pull the button up as shown.
B. Remove the battery cover.
C. Insert the 9V battery (not included).
D. Replace the battery cover.

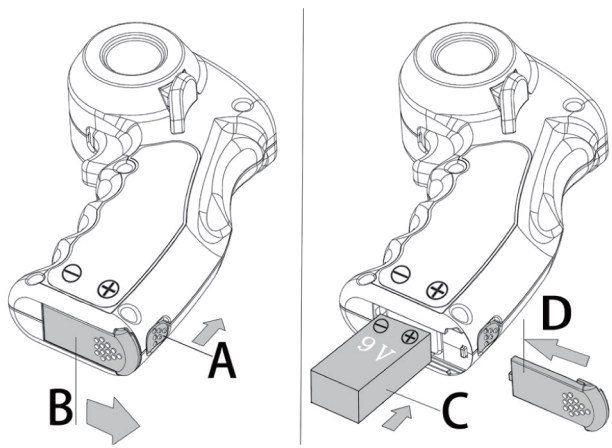

⚠ WARNING:
The remote control will beep when the 9V battery is low. It beeps every 10 seconds to warn that the battery is low (before it completely runs out). Pay attention and replace the remote control battery immediately as soon as you hear the beeps to avoid the possibility of losing control over the scooter due to a dead battery, which could result in a fall and serious injury or death.

BATTERY INFORMATION

Battery may leak fluids that can cause chemical burn injury or ruin your product. To avoid battery leakage: Install batteries correctly, observing the polarity (+/-) signs to avoid leakage.

- Insert batteries as indicated inside the battery compartment.
- Remove battery during long periods of non-use. Always remove exhausted batteries from the product. Battery leakage and corrosion can damage this product. Dispose of batteries safely.
- Do not dispose of battery in a fire. The battery may explode or leak.
- Never short circuit the battery terminals.
- Non-rechargeable batteries are not to be recharged.
- Use only batteries of the same or equivalent type as recommended.
- If removable, rechargeable batteries are used, they are only to be charged under adult supervision.
- Remove rechargeable batteries from the product before charging.
- Battery chargers used with toys must be examined regularly for damage to the cord, plug, enclosure and other parts. In the event that such damage is found, the toy must not be used with the battery charger until the damage has been repaired.
- When sound becomes faint or stops, it's time to replace the battery.

Turning the Board On

1. To turn the board on, press the on/off button located on the side of the Electric Skateboard black battery box. When the board is switched on you will see a red light (on the button)come on, indicating the board has been powered on.
2. Next, turn on the power of the wireless remote control. You will hear a faint, high-pitched beep indicating the remote has been powered on.

Note: Be sure to follow this sequence in order when turning on your board: First switch on Electric Skateboard and then switch on your remote — or your Electric Skateboard will not work.（Attention：after switching on the skateboard, be sure to switch the remote on within 10 seconds, otherwise you have to repeat the sequence again, to assure the skateboard and the remote control can match with each other's frequency.)
Your Electric Skateboard also has an automatic shutoff to prolong battery life. If the board is not used for about 5 minutes, power shuts off automatically. Turn back on to restart.

Riding Your Board

Once your board and the remote control are on and you are on the skateboard ready to ride, gradually pull the trigger "A" toward you to accelerate. To stop, release the trigger "A," and the skateboard will come to a stop.

Wireless Remote Control

The wireless remote control regulates the speed of the board:

- Pulling the trigger A toward you will always start at the lowest speed.
- Release the trigger A away from you, at any speeds, the skateboard will always decelerate to a complete stop, no matter which speed it is in.

IMPORTANT: The Electric Skateboard wireless remote uses a unique, close proximity low-frequency radio signal that minimizes the possibility of signal interference. However, signal interference may occur with high power lines, cell phones or other signal emitting devices. Use caution and check your ride area for possible sources of signal interference before use.

Remember: ALWAYS ride within your limits and comfort zone and NEVER ride without protective gear!

⚠ WARNING:

Ride only on smooth, flat, dry surfaces such as pavement or level ground without loose debris, such as sand, leaves, rocks or gravel. Water, mud, ice, bumpy, uneven, slick, or rough surfaces could impari traction and coutribute to possible loss of control.

Riding Tips

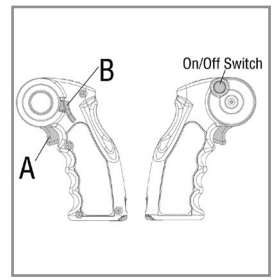

- Gradually pull the trigger A to start the motor; your skateboard will always start from the lowest speed.
- Once the motor has engaged, hold onto the trigger “A” and press the gear button “B” to increase speed.
- At medium or high speeds, if you want to decrease speed, you have to release the trigger A to decrease your speed automatically (and the motor will not engage). Then pull trigger A again to engage the motor and start again from the lowest speed to any speed you want.

  Slowing down and stopping are relative to the speed you are traveling. If you are at full speed when you release the trigger A, it may take a bit longer time to gradually stop the skateboard (than riding at lower speed.) Maximum speed and stopping distance depends on your weight and riding surface.
- The wireless remote control uses a standard 9-volt alkaline battery which is not included with the product. Turning the control off when not in use will maximize battery life. If you notice unreliable communication with the board, replace the battery.

Note: Do not ride downhill or uphill, ride only on FLAT, SMOOTH, DRY SURFACES.

KNOW YOUR LIMITS AND RIDE WITHIN THEM!

Start slowly and keep your speed down until you have a good feel for the acceleration

Regular Maintenance and Repair

Under normal use, your Electric Skateboard will require very little routine maintenance.

⚠ WARNING:

Turn power switch “OFF” before conducting any maintenance or repair.

MAINTENANCE WARNING

FAILURE TO FOLLOW MAINTENANCE INSTRUCTIONS AND GUIDELINES WILL VOID YOUR WARRANTY. DO NOT OPEN THE BATTERY BOX, MOTOR CONTROL ASSEMBLY OR MOTOR. DOING SO WILL VOID YOUR WARRANTY.

Tighten Fittings

The vibrations from normal use can cause some of the fittings to loosen over time. Check all fasteners for tightness before every use. This will require an allen wrench and a few different sized sockets or open-ended wrenches. Check and tighten all screws and nuts after every 4 to 5 hours of riding. Do not over-tighten as stripping can result. Snug is tight enough.

Keep the Board Dry

Your Electric Skateboard is not waterproof and must not be ridden in the rain, mud, or other wet areas to prevent electrical damage. Always keep your board clean and free of moisture.

Trucks & Bushings

TIGHTENING THE TRUCKS DOES NOT CHANGE THE STIFFNESS OR TURNING RADIUS. The trucks and bushings are factory preset and should not be adjusted. The bushings are specially formulated to absorb shock and provide positive steering control. Although specially formulated for extremely long life, the rubber bushings located in the trucks of your Electric Skateboard will wear over time. Replace them with the same special bushings that are standard equipment on the board. They are available through Dynacraft or your local dealer.

Remember: ALWAYS ride within your limits and comfort zone and NEVER ride without protective gear!

Drive Wheel

The drive wheel will wear considerably more than the other 3 wheels. If you start noticing that your board is grinding, you need to replace the drive wheel. Contact Dynacraft to order replacement wheels and other parts.

Drive Belt

Parts like the drive belt, wheel and battery will wear out with normal use and must be changed if they stop working smoothly. Replacements can be ordered from Dynacraft.

Torsion Trucks

DO NOT tighten or loosen the king pin in either of the torsion trucks to try to adjust the trucks' rigidity or turning radius. The trucks CANNOT BE ADJUSTED by loosening or tightening the kingpin bolt. All tension in the truck is controlled by the bushing, which is cast using various materials to achieve specific hardness. Tightening the kingpin may cause the bushing to split and is not covered under warranty.

Illustration on how to replace Drive Wheel and Drive Belt:

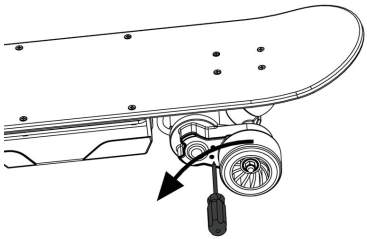

1. Loosen the two bolts on belt casing

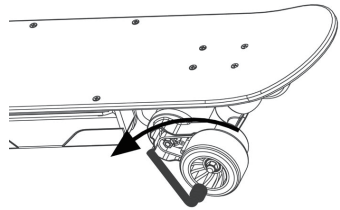

2. Use a 13mm socket wrench to loosen the axle locknut.

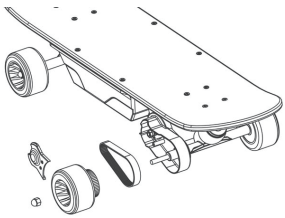

3. Move the drive wheel from the axle(and replace it when needed), and remove the belt for replacing.

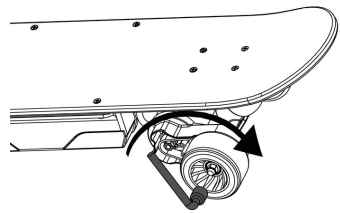

4. After installing a new belt (or new wheel), use a socket wrench to tighten the axle locknut securely.

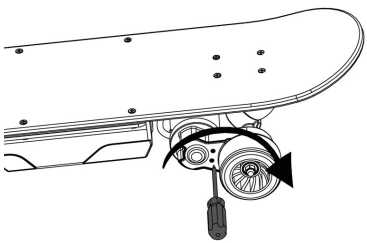

5. Securely re-tighten the two bolts on the belt casing as shown.

How to change batteries in the Remote Control:

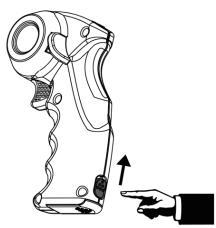

1. Pull the button up as shown (and meanwhile press the button without releasing).

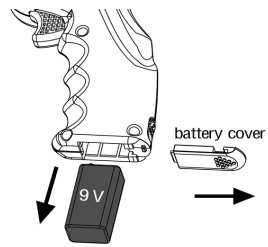

2. Remove the battery cover as shown to allow removal of the battery for replacement.

Replacing wheel bearings:

When you find a wheel doesn't rotate smoothly, is loose or makes clicking noises (and the wheel shows few signs of wear and tear), the wheel bearing may need to be replaced according to the following guidelines:

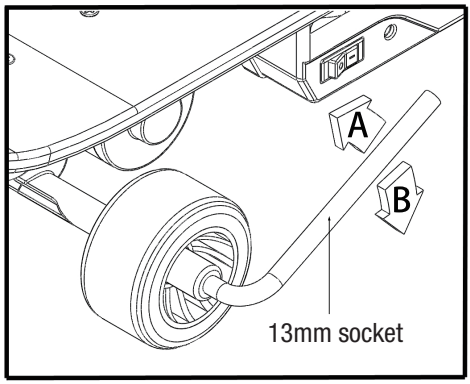

1. Use a 13mm socket wrench to remove the axle locknut in the direction of arrow A as shown.

2. Remove the bearings as shown.

3. After replacing bearings, replace all parts following the diagram at right. Fasten nut D in the direction of arrow B according to the picture above, then rotate the wheel with your hand to test if it is loose or does not rotate freely. If there is nothing wrong, ride at a low speed to ensure safety before use.

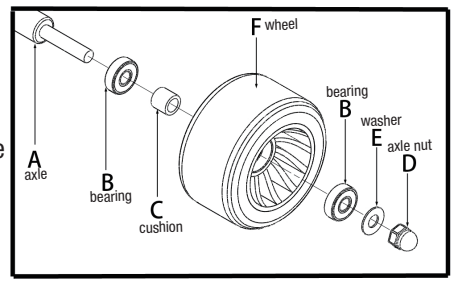

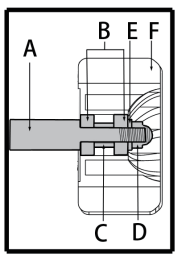

⚠ WARNING:

Electric Skateboard must be powered off before replacing any parts. Make sure your replacement part is correct and the nut is tightened. Otherwise, it is very easy to cause personal injury!

Troubleshooting

Issue	Problem/Cause	Solution
Skateboard does not start up.	• Skateboard controller is not turned on.	Turn on.
	• The indicator light on the charger is red.	Recharge the skateboard.
	• No beep heard when turning on controller	Battery is not properly installed or is out of power, re-install or change battery.
	• Signal interference nearby	Move away from area with interference.
Skateboard stops automatically after running for some time.	• Overheat/overload protection of motor.	Cool motor.
	• Low voltage production of controller.	Change or re-charge battery.
	• Signal interference nearby	Move away from area with interference.
Intermittent power while riding.	• Controller and receiver are wet or moist.	Drain/dry (may need replacement).
	• Out of power	Recharge battery.
Unable to charge skateboard.	• No power can be charged into (when the wall outlet in good condition), or charger has overheated, or charger does not light up.	Replace charger.
	• Red light flashes in succession because charger does not work smoothly or due to low voltage of battery group.	Change charger or charge the battery group.
Strong vibration and loud high-pitched noise when running.	• Belt is loose or flexible.	Adjust the belt, fasten screw and nut, and readjust nut
	• Bearing is damaged.	Change bearing.
The skateboard stops while riding	• Out of power	Recharge the battery.
	• Wheels not moving but motor still running, the belt is broken.	Replace drive belt.

Remember: ALWAYS ride within your limits and comfort zone and NEVER ride without protective gear!

Battery Care and Disposal

Do not store the battery in temperatures above 75°F (23.5°C) or below 32°F (0°C).

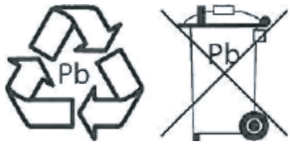

THIS PRODUCT CONTAINS SEALED LEAD ACID BATTERIES WHICH MUST BE RECYCLED IN ACCORDANCE WITH YOUR LOCAL AND STATE LAWS. PLEASE CAREFULLY READ AND UNDERSTAND THE FOLLOWING DISPOSAL INSTRUCTIONS:

Disposal: This product contains sealed lead acid batteries which must be disposed or recycled in an environmentally safe manner. Do not dispose of the batteries in your household trash. Do not dispose of the batteries in a fire, as the batteries may explode or leak. The incineration, disposal in landfill and/or placing sealed lead acid batteries with household trash is prohibited by law in most areas. Return exhausted batteries to a state or federal approved lead acid battery recycler or check with your local retailer of vehicle batteries. If you live in Florida or Minnesota, it is prohibited by law to throw away lead-acid batteries in the municipal waste stream.

Charger

The charger supplied with the skateboard should be regularly examined for damage to the cord, plug, enclosure and other parts. And in the event of such damage, the skateboard must not be charged until the charger has been repaired or replaced. Only use the supplied battery charger or recommended replacement charger.

⚠ **WARNING:** Always disconnect your skateboard from the charger before cleaning with any liquid.

Wheels & Belt

Wheels, belt and drive system components are subject to normal wear and tear. It is the responsibility of the user to regularly inspect wheels for excess wear and adjust and replace drive train components as required.

Replacement Parts

Most of the common replacement parts are available for purchase on line at www.dynacraftbike.com

Customer Service and Repair Help

- Check online at www.dynacraftbike.com
- Call to speak with a customer service representative 1.800.288.1560 7AM TO 4PM pacific time.

⚠ WARNING:

1. Do not mix old and new batteries. Do not mix alkaline, standard (carbon-zinc), or rechargeable (nickel-cadmium) batteries.
2. Do not store the battery in temperatures above 75°F (23.5°C) or below 32°F (0°C).
3. If a battery leak develops, avoid contact with the leaking acid and put the battery in a plastic bag. Refer to disposal information above. If acid comes into contact with skin or eyes, flush with cool water for at least 15 minutes and contact a physician.

⚠ WARNING: Changes or modifications to this unit not expressly approved by the party responsible for compliance could void the user's authority to operate the equipment.

NOTE: This equipment has been tested and found to comply with the limits for a Class B digital device, pursuant to Part 15 of the FCC Rules. These limits are designed to provide reasonable protection against harmful interference in a residential installation. This equipment generates, uses and can radiate radio frequency energy and, if not installed and used in accordance with the instructions, may cause harmful interference to radio communications.

However, there is no guarantee that interference will not occur in a particular installation. If this equipment does cause harmful interference to radio or television reception, which can be determined by turning the equipment off and on, the user is encouraged to try to correct the interference by one or more of the following measures:

- Reorient or relocate the receiving antenna.
- Increase the separation between the equipment and receiver
- Connect the equipment into an outlet on a circuit different from that to which the receiver is connected.
- Consult the dealer or an experienced radio/TV technician for help.

WARRANTY

Limited Warranty

Subject to the following limitations, all electric skateboards manufactured for Dynacraft are warranted to the original purchaser to be free of defects in materials and workmanship for a period of 90 days from the date of purchase.

No other express or implied warranty is given. Dynacraft will replace without charge those component parts that are determined by Dynacraft to be defective in materials or manufacture under normal use and service during the warranty period. The original purchaser will be responsible for any and all labor charges connected with the repair or replacement of component parts.

This Limited Warranty does not apply to normal wear and tear, such as to wheels/tires, belt, cables, or other components that wear with use, nor to claimed defects, malfunctions, or failures that result from abuse, neglect, improper maintenance,lack of maintenance, improper storage, alteration, modification, collision, crash, or misuse of the Dynacraft electric skateboard.

Dynacraft does not encourage stunting, trick riding, ramp riding, jumping, aggressive riding, riding on severe terrain, riding in severe climates, riding with heavy loads, commercial activities, or other similar activities; such use is inherently dangerous, can cause serious injury to the rider, and if done, it is with the rider and/or the rider's parent's express and implied assumption of the risk of such use, and Dynacraft shall not have any responsibility for any resulting break down of the skateboard or its components, or for any rider injuries that occur during such use.

Riding an electric skateboard can be inherently dangerous such that bodily injury or even death can occur, especially if the rider and/or the rider's parent does not perform the safety and maintenance checks recommended in this manual, if the rider does not wear a helmet, if the rider does not follow all applicable laws and rules, if the rider goes into traffic, rides double, or engages in aggressive, stunt or extreme terrain riding. Parents that allow their children to ride taking such actions will assume their own risk and the risk of injury to their children, and Dynacraft will not be responsible.

THE PURCHASE OF THIS ELECTRIC SKATEBOARD WILL CONFIRM THE BUYER'S AGREEMENT THAT DYNACRAFT'S LIABILITY UNDER THIS WARRANTY SHALL BE NO GREATER THAN THE AMOUNT OF THE ORIGINAL PURCHASE PRICE AND IN NO EVENT SHALL DYNACRAFT BE LIABLE FOR INCIDENTAL OR CONSEQUENTIAL DAMAGES.

This Limited Warranty will be void if the product is ever

- used in a manner other than for recreation or transportation
- modified in anyway
- used as a rental

Dynacraft does not offer an extended warranty; if you have purchased an extended warranty, it must be honored by the store from which you purchased the skateboard or the appropriate party. For your records, keep your original sales receipt with this manual.

Dynacraft
Customer Service
1.800.288-1560

7AM TO 4PM PACIFIC TIME

Please have the following information available when you call:

Model Number:	(sample: 8595-95)
Production Date:	(sample: 2003.10.10)
Serial Number:	(sample: QYOFF589983)

Having this information is required and helps us handle your call more effectively.

STOP

DO NOT *return this item to the store.*
Please call Dynacraft for assistance.

Dynacraft BSC, Inc.

Dynacraft BSC, Inc.
89 S. Kelly Rd., American Canyon, CA 94503
Call Toll Free 1.800.288-1560
Monday - Friday 7AM TO 4PM PACIFIC TIME
www.dynacraftbike.com

2014 Printed in China

BM087