Unique Broadband Systems Ltd.

Instruction Manual

DRU-1k
SiriusXM® Dual Repeater

1kW Dual Repeater Unit (DRU)

Unique Broadband Systems Ltd.
400 Spinnaker Way • Vaughan • Ontario • Canada • L4K 5Y9
Phone: (905) 669-8533 • Fax: (905) 669-8516
www.uniquesys.com

Document: SX03-20000-01-M03
Revision: 01
Date: August 2014

RESTRICTIONS ON USE, DUPLICATION OR DISCLOSURE OF PROPRIETARY INFORMATION

This document contains information proprietary to Unique Broadband Systems Ltd., to its affiliates or to a third party to which Unique Broadband Systems Ltd. may have a legal obligation to protect such information from unauthorized disclosure, use or duplication. Any disclosure, use or duplication of this document or any of the information herein for other than the specific purpose for which it was disclosed by Unique Broadband Systems Ltd. is expressly prohibited, except as Unique Broadband Systems Ltd may otherwise agree in writing. Recipient by accepting this document agrees to the above stated conditional use of this document and this information disclosed herein.

Copyright © 2014, Unique Broadband System Ltd.

TDB

TBD

This device complies with part 15 of the FCC Rules. Operation is subject to the condition that this device does not cause harmful interference.

Note: This equipment has been tested and found to comply with the limits for a Class A digital device, pursuant to part 15 of the FCC Rules. These limits are designed to provide reasonable protection against harmful interference when the equipment is operated in a commercial environment. This equipment generates, uses, and can radiate radio frequency energy and, if not installed and used in accordance with the instruction manual, may cause harmful interference to radio communications. Operation of this equipment in a residential area is likely to cause harmful interference in which case the user will be required to correct the interference at his own expense.

Caution:

Changes or modifications not expressly approved by Unique Broadband Systems could void the user's authority to operate this equipment.

This page has intentionally been left blank.

CONTENTS

SAFETY INSTRUCTIONS	1
SYSTEM DESCRIPTION	2
INSTALLATION	3
COMMISSIONING	4
OPERATION	5
MAINTENANCE	6
CONTACT INFORMATION	7

REPEATER DRAWINGS AND DIAGRAMS

A

Unique Broadband Systems Ltd.

Chapter 1

Safety Instructions

Contents

1 Safety Instructions 1-1
1.1 Manual Overview 1-1
1.2 On-Site Safety 1-1
1.3 Safe Work Practices 1-2
1.4 Safety Notes 1-3
1.5 Graphic Symbols 1-4
1.6 Electrical Safety 1-5
1.6.1 Connection to the AC Power Supply 1-5
1.6.2 Installation 1-5
1.6.3 Commissioning and Maintenance 1-5
1.7 RF Safety 1-6
1.7.1 Non-ionizing Radiation 1-6
1.7.2 Rules for Operating the Repeater 1-6
1.8 Physical Safety 1-6
1.9 Static Electricity 1-7
1.9.1 Rules for Handling ESD Sensitive Modules 1-7
1.10 First Aid 1-7
1.10.1 Rescue Breathing 1-8
1.10.2 Burns.... 1-8

This page has intentionally been left blank.

1 Safety Instructions

1.1 Manual Overview

This manual contains a description of UBS' SiriusXM Digital Terrestrial Repeater DRU-1k (Combined and Independent configurations), as well as descriptions of the components/sub-assemblies which make up the repeater.

The manual also describes the steps required to install the repeater (and its components/sub-assemblies), put it into operation, operate/maintain it and service it. Where applicable, the repeater manual refers to the individual product manuals for several major assemblies. The Appendix includes repeater mechanical, functional and wiring drawings/diagrams.

1.2 On-Site Safety

It is important that service technicians understand the hazards involved with working on broadcasting sites, are able to identify potential hazards and take appropriate action to minimize such hazards. This manual is intended as a general guide for trained and qualified personnel.

The installation, operation, maintenance and service of this equipment involves risks to both personnel and equipment, and must be performed only by qualified personnel exercising due care. Unique Broadband Systems Ltd. shall not be responsible for injury or damage resulting from improper procedures or from the use by improperly trained or inexperienced personnel performing such tasks.

During the installation and operation of this equipment, local building and electrical codes as well as fire protection standards must be observed. Always follow the relevant local or national safety rules and regulations.

1.3 Safe Work Practices

1. Workers shall not work in conditions that are unsanitary, hazardous or dangerous to their health or safety.
2. Workers shall wear appropriate personal protective equipment for the specific job or task.
3. Workers shall take all reasonable and necessary precautions to ensure their safety, the safety of their fellow workers and any person likely to be affected by their acts.
4. First aid kits and supplies shall be readily available on site at all times.
5. There shall be transportation readily available for an injured worker.
6. Any flammable material shall be handled and stored in a proper manner.
7. Workers in areas where there is a possible danger of head injury from the impact of falling objects, or from electrical shocks or burns shall wear proper head protection such as a hard hat.
8. Hard hats shall be worn at all times while an overhead hazard exists.
9. When machines or operations present a possible eye injury, proper eye protection shall be worn.
10. Safety toe work boots shall be worn where there is a danger of foot injury.
11. Signs and signals shall be used to alert people of potential dangers.

1.4 Safety Notes

Please review the following notes and familiarize yourself with the operation and servicing procedures before working on the repeater.

Read All Safety Instructions – All of the safety instructions should be read and understood before operating the repeater.

Heed all Notes, Warnings, and Cautions – All of the notes, warnings, and cautions listed in this safety section and throughout the manual must be followed.

Follow Installation and Operating Instructions – All of the installation and operating instructions for the repeater should be followed.

Retain Manuals – The manuals for the repeater should be retained at the site for future reference.

Repeater Ratings - The repeater ratings are provided in the text of this manual along with voltage and current values for the equipment.

Hazardous Accessibility – UBS has made attempts to provide appropriate connectors, wiring and shields to minimize hazardous accessibility.

Protective Earthing Terminal – A main protective earthing terminal is provided for equipment required to have protective earthing.

Single Point Breaker or Disconnect - The customer should provide a single point breaker or disconnect at the breaker box for the main AC input connection to the repeater.

Circuit Breakers and Wiring – All circuit breakers and wire are UL and CE certified and are rated for maximum operating conditions.

Ventilation – Openings in the cabinet are provided for ventilation. To ensure the reliable operation of the repeater and to protect the unit from overheating, these openings must not be blocked.

Servicing – Do not attempt to service the repeater yourself until becoming familiar with the equipment. If in doubt, refer all servicing questions to qualified UBS service personnel.

Cleaning – Unplug or otherwise disconnect all power from the equipment before cleaning. Do not use liquid or aerosol cleaners. Use only a damp cloth for cleaning.

Replacement Parts – When replacement parts are used, be sure that the parts have the same functional and performance characteristics as the original part. Unauthorized substitutions may result in fire, electric shock, or other hazards. Please contact UBS if you have any questions regarding service or replacement parts.

1.5 Graphic Symbols

Specific warning and caution statements, where applicable, are found throughout this manual.

Symbol	Meaning	Explanation
	High Voltage	Danger - High voltage and/or risk of electric shock.
	Warning	Warning - To prevent damage to equipment or personal injury, the operator must refer to all operating instructions in the manual.
	Electrostatic Discharges	Caution - Improper handling of equipment may result in damage to equipment from electrostatic discharges (ESD).
	Non-ionizing Radiation	Caution - Exposure to radio frequencies may result in person injury.
	Tipping Hazard	Caution - Over tipping the repeater may cause it to fall over, resulting in personal injury or loss of life.
	Lifting Hazard	Caution - Lifting heavy objects may result in personal injury.
	Hot Surface Hazard	Caution - Touching hot surfaces may result in burns. Allow surface to cool before servicing equipment.

1.6 Electrical Safety

1.6.1 Connection to the AC Power Supply

Electrical connections between the repeater and the building/site electrical service panel must comply with the following conditions:

- A properly rated circuit breaker must be installed in the building/site electrical service panel.
- A properly rated power cable must be used to connect the repeater to the building/site electrical service panel.
- A readily accessible disconnect device shall be installed between the repeater PDU and building/site electrical service panel.
- The repeater can be secured against unintentional power-on.

1.6.2 Installation

- Ensure that all repeater PDU circuit breakers and sub-assembly power switches are switched off during the installation.
- Ensure that the main AC power cable to the repeater PDU is the last cable connected to the repeater when installing repeater cables.

1.6.3 Commissioning and Maintenance

	Never work on live parts unless specifically required and only if special safety precautions are followed.

Carefully observe the specific procedures for commissioning and maintenance where AC or DC power is present and observe the following rules.

- Remove rings, watches, and any other metallic jewelry. Short circuits in low-voltage, low-impedance DC circuits can cause severe arcing, which may result in burns or eye injury. Exercise caution to avoid shorting power input terminals.
- Ensure that the repeater's main breaker (or disconnect device) is turned off and a "**DANGER-DO NOT TURN ON - Personnel Working**" sign is hung on the breaker prior to working on the repeater's internal parts.
- Secure the repeater against unintentional power-on.
- Verify that the repeater is isolated from any power.
- Ensure that all repeater PDU circuit breakers are switched off prior to working on internal parts.

1.7 RF Safety

1.7.1 Non-ionizing Radiation

	The American National Standards Institute (ANSI) has determined that it may be harmful for the human body to be exposed to Radio Frequencies in the range of 3KHz to 300GHz. In that range, people are not allowed to be exposed to RF power levels greater than 1mW/cm2 for longer than 5 minutes.

1.7.2 Rules for Operating the Repeater

	Opening RF lines during operation may cause electric arcs that can cause burns and eye injuries.

- Ensure that the repeater RF output ports are connected to properly rated antennas or test (dummy) loads before the repeater is powered on.
- Never turn on RF power if an RF line is open.
- Never undo RF lines during repeater operation.
- Never open modules during repeater operation.

1.8 Physical Safety

	Over tipping the repeater may cause it to fall over, resulting in personal injury or loss of life.

- The repeater will be secured to the building/pad before operation.
- Installation crew members must wear hard hats and steel toe boots/shoes during the installation.
- A minimum of two technicians is required for any lifting and/or positioning of the repeater cabinet.

1.9 Static Electricity

	This product contains ESD (Electrostatic Discharge) sensitive devices. Careless handling during repair can weaken, damage or destroy the devices.

Items such as clothing, paper/cardboard and plastics are the most common sources of electrostatic discharge. Please ensure that cellophane, plastics, masking tapes and white foam do not come into contact with ESD sensitive modules or their packaging.

1.9.1 Rules for Handling ESD Sensitive Modules

When repairing a module, proper ESD procedures should be followed to minimize the risk of damaging the module.

- All modules should be handled as ESD sensitive devices.
- Failed modules should be handled with the same care as good modules.
- Modules should be stored, packed, or shipped in antistatic bags or containers.
- Do not handle modules by touching the electronic components and/or PCB.
- Either wrist or heel ground straps should be worn prior to and during handling of modules containing ESD sensitive devices.
- Heel straps are only effective while standing on conductive or static dissipative surfaces.
- Surfaces (with resistance to ground in excess of 100 Meg-ohms), such as ordinary tile, should be covered with properly grounded static dissipative runners or waxed with a static dissipative wax.
- Use only ESD rated cleaning devices to clean modules.

1.10 First Aid

	Personnel engaged in the installation, operation, or maintenance of the repeater are urged to become familiar with the following rules both in theory and practice. It is the duty of all operating personnel to be prepared to give adequate Emergency First Aid and thereby prevent avoidable loss of life.

1.10.1 Rescue Breathing

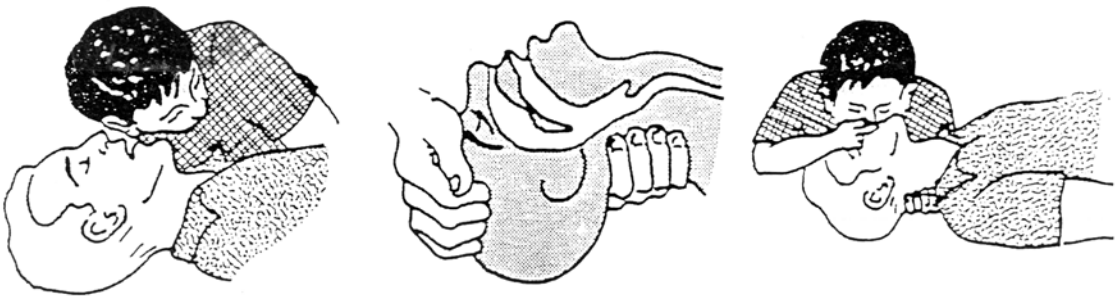

1. Find out if the person is breathing. You must find out if the person has stopped breathing. If you think he is not breathing, place him flat on his back. Put your ear close to his mouth and look at his chest. If he is breathing you can feel the air on your cheek. You can see his chest move up and down. If you do not feel the air or see the chest move, he is not breathing.	2. If he is not breathing, open the airway by tilting his head backwards. Lift up his neck with one hand and push down on his forehead with the other. This opens the airway. Sometimes doing this will let the person breathe again by himself.	3. If he is still not breathing, begin rescue breathing. • Keep his head tilted backward. Pinch nose shut. • Put your mouth tightly over his mouth. • Blow into his mouth once every five seconds • **DO NOT STOP** rescue breathing until help arrives. LOOSEN CLOTHING - KEEP WARM Do this when the victim is breathing by himself or help is available. Keep him as quiet as possible and from becoming chilled. Otherwise treat him for shock.

1.10.2 Burns

Skin Reddened: Apply ice cold water to the burned area to prevent the burn from going deeper into skin tissue. Cover the area with a clean sheet or cloth to keep away air. Consult a physician.

Skin Blistered or Flesh Charred: Apply ice cold water to the burned area to prevent the burn from going deeper into skin tissue.

Extensive Burn – Skin Broken: Cover the area with a clean sheet or cloth to keep away air. Treat the victim for shock and take to hospital.

Unique Broadband Systems Ltd.

Chapter 2

System Description

Contents

2 System Specifications 2-1
2.1 External Input Signal Interfaces 2-1
2.2 External Output Signal Interfaces 2-2
2.3 High Band RF Output 2-2
2.4 Low Band Main RF Output 2-3
2.5 Low Band Diversity RF Output 2-4
2.6 Power Supply 2-5
2.7 Environmental 2-5
2.8 Mechanical 2-6

This page has intentionally been left blank.

2 System Specifications

2.1 External Input Signal Interfaces

S-Band Antenna	
Connector Name	S-SAT
Connector Type	N (female)
Connector Impedance	50 Ω

Ku-Band Antenna	
Connector Name	V SAT
Connector Type	F (female)
Connector Impedance	75 Ω

GPS Antenna	
Connector Name	GPS
Connector Type	N (female)
Connector Impedance	50 Ω

Test Antenna	
Connector Name	ANT
Connector Type	SMA (female)
Connector Impedance	50 Ω

PSTN Phone Line	
Cable Gland Name	TEL
Connector Type	Screw down terminals
Dial-up Modem Manufacturer	Multitech Systems
Model Number	MT5634IND
ACTA Registration Number	AU7USA-25814-M5-E
Ringer Equivalence Number	0.3B

2.2 External Output Signal Interfaces

Combined RF Output Port	
Connector Name	Output 1
Connector Type	WR340 Waveguide
Connector Impedance	50 Ω

Independent RF Output Port	
Connector Name	Output 2
Connector Type	Combined DRU: 7/8" EIA Flange Independent DRU: WR340 Waveguide
Connector Impedance	50 Ω

2.3 High Band RF Output

High Band RF Output	
Standard	XM Satellite Radio
Output Connector	Output 1
Output VSWR	< 1.3:1
Centre Frequency	2338.755 MHz
Bandwidth	5.060 MHz
Output Power Level	50 dBm to 60 dBm (100 W to 1 kW)
Output Power Level Stability (with ALC engaged)	± 0.2 dB
Spectral Re-growth	> 24 dBc
In-band Carrier to Interference	> 21 dBc
Peak-to-Average Ratio (@ 0.1% CCDF)	> 7.0, < 13.0
Gain Flatness	≤ +0.75 dB
In-band/Out-of-Channel Emissions	> 30 dBc: @ 2335.255 MHz, @ 2342.255 MHz > 46 dBc: @ 2333.515 MHz, @ 2343.995 MHz
Out-of-Band Emissions	< -90 dB Watts/MHz (< 2320.0 MHz, > 2345.0 MHz) < -80 dB Watts/MHz (2332.5 - 2345.0 MHz)

2.4 Low Band Main RF Output

Low Band RF Output	
Standard	Sirius Satellite Radio
Output Connector	Combined DRU: Output 1 Independent DRU: Output 2
Output VSWR	< 1.3:1
Centre Frequency	2326.250 MHz
Bandwidth	4.012 MHz
Output Power Level	50 dBm to 60 dBm (100 W to 1 kW)
Output Power Level Stability (with ALC engaged)	± 0.2 dB
Spectral Re-growth	> 27 dBc
In-band Carrier to Interference	> 24 dBc
Peak-to-Average Ratio (@ 0.1% CCDF)	> 7.0, < 13.0
Gain Flatness	≤ +0.75 dB
In-band/Out-of-Channel Emissions	> 35 dBc: @ 2322.138 MHz > 35 dBc: @ 2330.362 MHz
Out-of-Band Emissions	< -90 dB Watts/MHz (< 2320.0 MHz, > 2345.0 MHz) < -80 dB Watts/MHz (2332.5 - 2345.0 MHz)

2.5 Low Band Diversity RF Output

Low Band Diversity RF Output	
Standard	Sirius Satellite Radio
Output Connector	Combined DRU: Output 2 Independent DRU: Output 1
Output VSWR	< 1.3:1
Centre Frequency	2326.256040 MHz
Bandwidth	80 kHz
Output Power Level	23 – 33 dBm (200 mW to 2 W)
Output Power Level Stability (with ALC engaged)	N/A
Spectral Re-growth	> 30 dBc
In-band Carrier to Interference	N/A
Peak-to-Average Ratio (@ 0.1% CCDF)	> 3.0, < 5.0
Gain Flatness	N/A
In-band/Out-of-Channel Emissions	> 45 dBc @ 2322.138 MHz > 45 dBc @ 2330.362 MHz
Out-of-Band Emissions	< -97 dB Watts/MHz (< 2320.0 MHz, > 2345.0 MHz) < -87 dB Watts/MHz (2332.5 - 2345.0 MHz)

2.6 Power Supply

Power Supply	
Voltage	190 – 264 VAC (208 VAC nominal), Single Phase, 4 wire (L1, L2, N, G)
Frequency	47 to 63 Hz
Power Consumption	Overall: max. 19.2 kVA HB Cabinet: 10.1 kVA LB Cabinet: 9.1 kVA

2.7 Environmental

Environmental	
Ambient Operating Temperature	-4°F to +131°F (-20°C to +55°C)
Ambient Storage Temperature	-22°F to +167°F (-30ºC to +75ºC)
Operating Humidity	5% to 95%, non-condensing
Storage Humidity	5% to 99%, non-condensing
Altitude	max. 5500 ft. (1676 m)
Electronics Compartment Cooling	Air-to-Air Heat Exchanger
Electronics Compartment Inside Temperature	14°F to +149°F (-10°C to +65°C)
HPA Compartment Cooling	Forced Air, 2800 CFM
HPA Compartment Inside Temperature	-4°F to +131°F (-20°C to +55°C)
Total DRU Heat Dissipation	54,000 BTU (Exhausted + Radiated) Note: Radiated heat (into room) is equal to 15% of dissipated heat.

2.8 Mechanical

Mechanical (Overall)	
Width	94.13 in. (239.09 cm)
Depth	43.80 in. (111.25 cm)
Height	82.50 in. (209.55 cm)
Weight (fully populated)	2200 lbs. (998 kg)
Mechanical (HB Cabinet)	
Width	40.19 in. (102.08 cm)
Depth	43.80 in. (111.25 cm)
Height	82.50 in. (209.55 cm)
Mechanical (LB Cabinet)	
Width	40.19 in. (102.08 cm)
Depth	43.80 in. (111.25 cm)
Height	82.50 in. (209.55 cm)
Mechanical (OFN Cabinet)	
Width	19.75 in. (50.17 cm)
Depth	30.44 in. (77.31 cm)
Height	Combined DRU: 65.91 in. (167.41 cm) Independent DRU: 64.61 in. (164.11 cm)

Unique Broadband Systems Ltd.

Chapter 3

Installation

Contents

3 Installation 3-1

3.1 Introduction 3-1

3.2 Components/Sub-Assemblies Installed at the Factory 3-1

3.3 Components/Sub-Assemblies Installed On-Site 3-3

3.4 Required Tools 3-4

3.5 Installation Overview 3-5

3.6 Repeater Setup 3-7

3.6.1 Moving the Repeater Cabinets 3-7
3.6.2 Installation Surface 3-10
3.6.3 Repeater Cabinet Positioning 3-10
3.6.4 Unpacking 3-12

3.7 HB Cabinet Electronics Compartment Components 3-13

3.7.1 BMS 12 VDC Rectifier Module 3-15
3.7.2 High Band Exciter (HBE) 3-16

3.8 LB Cabinet Electronics Compartment Components 3-17

3.8.1 Low Band Exciter (LBE) 3-19

3.9 HB and LB Cabinet HPA Compartment Components 3-20

3.9.1 HPA Compartment Pre-installation 3-23
3.9.2 High Power Amplifier (HPA) 3-25
3.9.3 Finalize HPA Installation 3-28
3.9.4 HPA PSU 30 VDC Rectifier Module 3-28

3.10 HB Cabinet Internal Wire/Cable Connections 3-30

3.10.1 Ground and AC Connections 3-31
3.10.2 High Band Exciter (HBE) 3-32

3.11 LB Cabinet Internal Wire/Cable Connections 3-33

3.11.1 Ground and AC Connections 3-34
3.11.2 Low Band Exciter (LBE) 3-35

3.12 External Input Signal Interfaces 3-38

3.12.1 HB Cabinet 3-38
3.12.2 S-Band Antenna 3-38
3.12.3 LB Cabinet 3-39
3.12.4 Ku-Band Antenna 3-39
3.12.5 GPS Antenna 3-40

3.13 Communications Interfaces 3-40

3.13.1 PSTN Phone Line 3-40

3.14 Shelter/Room Alarm Connections 3-42

3.15 RF Output Interfaces 3-44

3.15.1 Configuration 3-44
3.15.2 Terminating a WR3 40 Flange Output 3-45
3.15.3 Terminating a 7/8” EIA Flange Output 3-45

3.16 AC Power 3-47

3.16.1 General Requirements 3-47
3.16.2 Repeater Cabinet Ground Connection 3-47
3.16.3 Repeater Cabinet AC Power Connection 3-49

This page has intentionally been left blank.

3 Installation

3.1 Introduction

This section describes the installation procedures for the DRU-1k, which is to be installed in a restricted access location.

3.2 Components/Sub-Assemblies Installed at the Factory

The following components/sub-assemblies are installed in the Combined DRU cabinets prior to shipping.

Table 3-1 Combined DRU Components/Sub-Assemblies Installed at the Factory

Electronics Compartment	Part Number	Quantity
HB PDU	SX03-21300-01	1 (HB Cabinet)
LB PDU	SX03-22300-01	1 (LB Cabinet)
Dual Band Pass Filter (DBPF)	SX03-50100-01	1 (HB Cabinet)
Low Noise Amplifier (LNA)	SX03-50200-01	1 (HB Cabinet)
BMS Mounting Shelf w/Controller	SX03-50300-01	1 (HB Cabinet)
BMS 12 VDC Battery	SX03-50330-01	1 (HB Cabinet)
Air-to-Air Heat Exchanger/Heater	SX03-50400-01	2 (1 per cabinet)
Transmission Sub-system Controller (TSC)	SX03-50700-01	2 (1 per cabinet)
LBD DR Filter	SX03-51100-01	1 (LB cabinet)
Break Out Board	SX03-92020-01	2 (1 per cabinet)
TRMS	N/A	1 (LB Cabinet)
HPA Compartment	**Part Number**	**Quantity**
4-Way Splitter	000087234R	2 (1 per cabinet)
4-Way Hybrid Combiner w/Loads	SX03-21825-01	2 (1 per cabinet)
Fan (Blower) Box	SX03-50500-01	4 (2 per cabinet)
WG WR340 Coupler/RF Detector	SX03-51600-01	2 (1 per cabinet)
HPA PSU Mounting Shelf	SX03-51710-01	4 (2 per cabinet)
Output Filter Network (OFN) Cabinet	**Part Number**	**Quantity**
Combined OFN, WG	SX03-24100-02	1
WG WR340 Coupler/RF Detector	SX03-51600-01	1

The following components/sub-assemblies are installed in the Independent DRU cabinets prior to shipping.

Table 3-2 Independent DRU Components/Sub-Assemblies Installed at the Factory

Electronics Compartment	**Part Number**	**Quantity**
HB PDU	SX03-21300-01	1 (HB Cabinet)
LB PDU	SX03-22300-01	1 (LB Cabinet)
Dual Band Pass Filter (DBPF)	SX03-50100-01	1 (HB Cabinet)
Low Noise Amplifier (LNA)	SX03-50200-01	1 (HB Cabinet)
BMS Mounting Shelf w/Controller	SX03-50300-01	1 (HB Cabinet)
BMS 12 VDC Battery	SX03-50330-01	1 (HB Cabinet)
Air-to-Air Heat Exchanger/Heater	SX03-50400-01	2 (1 per cabinet)
Transmission Sub-system Controller (TSC)	SX03-50700-01	2 (1 per cabinet)
Break Out Board	SX03-92020-01	2 (1 per cabinet)
TRMS	N/A	1 (LB Cabinet)
HPA Compartment	**Part Number**	**Quantity**
4-Way Splitter	000087234R	2 (1 per cabinet)
4-Way Hybrid Combiner w/Loads	SX03-21825-01	2 (1 per cabinet)
Fan (Blower) Box	SX03-50500-01	4 (2 per cabinet)
WG WR340 Coupler/RF Detector	SX03-51600-01	2 (1 per cabinet)
HPA PSU Mounting Shelf	SX03-51710-01	4 (2 per cabinet)
Output Filter Network (OFN) Cabinet	**Part Number**	**Quantity**
Independent OFN, WG	SX03-24100-03	1
WG WR340 Coupler/RF Detector	SX03-51600-01	2

NOTE: A number of other components, which were installed in the cabinet prior to shipping, are not listed in Table 3-1 or Table 3-2. They include:

- Surge suppressors
- Connectors, adapters and flanges
- Mounting brackets and panels
- Ground, AC, DC and communications wires
- RF cables

3.3 Components/Sub-Assemblies Installed On-Site

The following components/sub-assemblies must be installed in a Combined DRU on-site, after delivery.

Table 3-3 Combined DRU Components/Sub-Assemblies Installed On-site

Electronics Compartment	Part Number	Quantity
BMS 12 VDC Rectifier Module	SX03-50320-01	2 (HB Cabinet)
HBE	N/A	1 (HB Cabinet)
LBE	N/A	1 (LB Cabinet)
Dial-up Modem	N/A	1 (site dependent)
HPA Compartment	**Part Number**	**Quantity**
High Power Amplifier (HPA)	SX03-40000-01	8 (4 per cabinet)
HPA PSU 30 VDC Rectifier Module	SX03-51720-01	8 (4 per cabinet)

The following components/sub-assemblies must be installed in an Independent DRU on-site, after delivery.

Table 3-4 Independent DRU Components/Sub-Assemblies Installed On-site

Electronics Compartment	Part Number	Quantity
BMS 12 VDC Rectifier Module	SX03-50320-01	2 (HB Cabinet)
HBE	N/A	1 (HB Cabinet)
LBE	N/A	1 (LB Cabinet)
Dial-up Modem	N/A	1 (site dependent)
HPA Compartment	**Part Number**	**Quantity**
High Power Amplifier (HPA)	SX03-40000-01	8 (4 per cabinet)
HPA PSU 30 VDC Rectifier Module	SX03-51720-01	8 (4 per cabinet)

3.4 Required Tools

The following tools will be needed to install the repeater:

Table 3-5 Required Tools

Tool	Type	Size
Screwdriver	Phillips	#3
Screwdriver	Phillips	#2
Screwdriver	Slotted	1/4”
Screwdriver	Slotted	3/32”
Hex Driver		9/64”
Open End Wrench		1/2”
Open End Wrench		7/16”
Open End Wrench		11/32”
Open End Wrench		5/16”
Torque Wrench		5/16”
Wire Stripper		

3.5 Installation Overview

The repeater can be installed by following the basic sequence below:

- Repeater set-up
  - Check the installation surface structure, flatness and suitability.
  - Position the repeater cabinets according to the site drawing(s).
  - Fasten the cabinets together according to the mechanical drawing(s).
  - Unpack the components/sub-assemblies.
- HB cabinet
  - Electronics compartment components/sub-assemblies
    - Install the BMS 12 VDC rectifier module in the BMS mounting shelf.
    - Mount the HBE in the electronics compartment.
  - HPA compartment components (assemblies).
    - Install the HPA's in the HPA compartment.
    - Install the HPA 30 VDC rectifier modules in the HPA PSU mounting shelf.
  - Internal wire/cable connections
    - Connect the ground, communications, RF and power wires/cables to the HBE.
  - External input signal interfaces
    - Connect the cable from the S-Band antenna to the S-SAT surge protector.
- LB cabinet
  - Electronics compartment components/sub-assemblies
    - Mount the LBE in the electronics compartment.
    - Mount the dial-up modem in the electronics compartment (where applicable).
  - HPA compartment components (assemblies).
    - Install the HPA's in the HPA compartment.
    - Install the HPA 30 VDC rectifier modules in the HPA PSU mounting shelf.
  - Internal wire/cable connections
    - Connect the ground, communications, RF and power wires/cables to the LBE.
    - Connect the ground, communications and power wire/cables to the dial-up modem (where applicable).
  - External input signal interfaces
    - Connect the cable from the Ku-Band VSAT antenna to the V SAT surge protector.
    - Connect the cable from the GPS antenna to the GPS surge protector.
  - Communications interface
    - Connect the PSTN phone line to the Telco surge protector (where applicable).
  - Shelter/room alarm connections
    - Connect any shelter/room alarm contacts/sensors (where applicable) to the break out board.

- OFN Cabinet
  - Cable connections
    - Connect the RF feedback cable(s) to the WR340 output coupler/RF detector.
  - RF output interfaces
    - Connect a broadcast antenna to Output 1 (where applicable).
    - Connect a broadcast antenna to Output 2 (where applicable).
- Repeater AC power
  - Connect the external ground conductor to the HB cabinet.
  - Connect the external ground conductor to the LB cabinet.
  - Connect the main AC power cable to the HB cabinet.
  - Connect the main AC power cable to the LB cabinet.

NOTE: Detailed repeater installation information can be found in the subsequent sections of this manual.

3.6 Repeater Setup

The DRU-1k repeater may be installed outdoors (typically on the roof of a building or at the base of a transmission tower) or it may be installed indoors (typically on the top floor of a building nearest to roof, or in a shelter at the base of a transmission tower) in a restricted access location.

3.6.1 Moving the Repeater Cabinets

For shipping purposes, the repeater cabinets are attached to pallets. Some options for moving the repeater cabinets are:

- Using a crane to lift the cabinets
- Using a pallet tuck
- Using a four wheeled furniture dolly
- Placing casters under the pallet

If the HB and LB cabinets are to be lifted using the lifting eyes attached to the cabinet hood (see Figure 3-1 and Figure 3-2), care should be taken to apply lifting forces vertically at each eye.

NOTE: A spreader bar or other rigging device provided by the installer must be employed for this purpose.

	Do not stand under a suspended cabinet, otherwise you could be crushed.

If the cabinets are moved from the delivery location to the installation location while still attached to their pallets, a pallet truck or casters are viable options. However, if the repeater cabinets must be removed from their pallets, a narrower furniture dolly is a viable option for moving the repeater cabinets.

Figure 3-1 LB Cabinet Top Down View

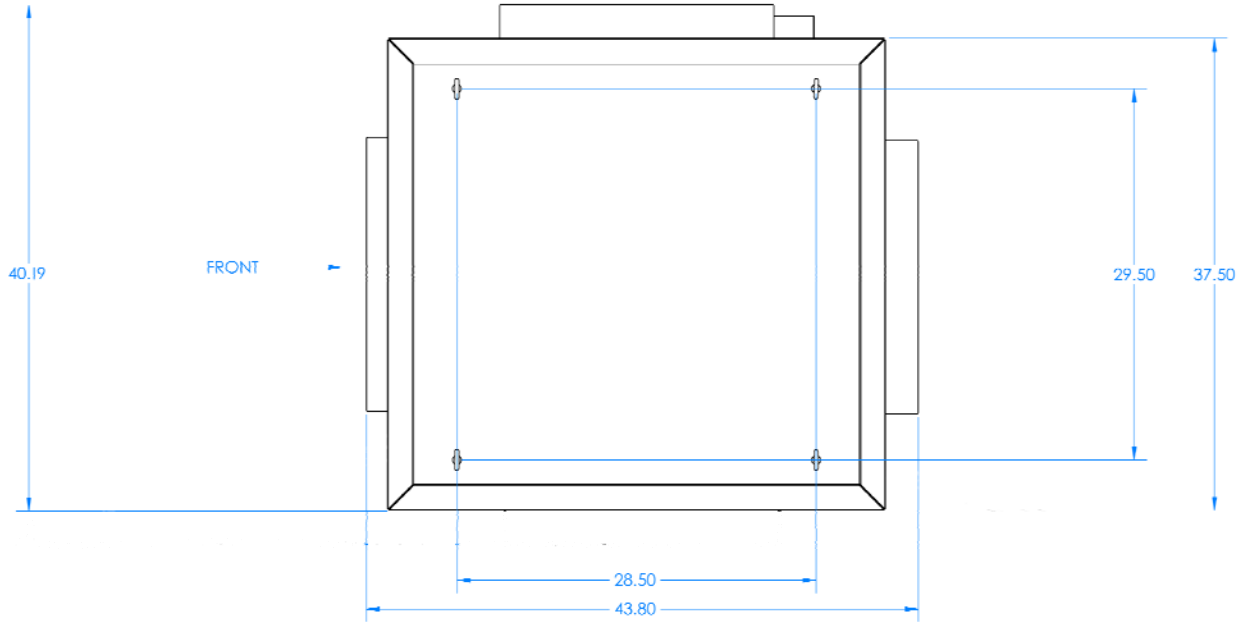

Figure 3-2 HB Cabinet Top Down View

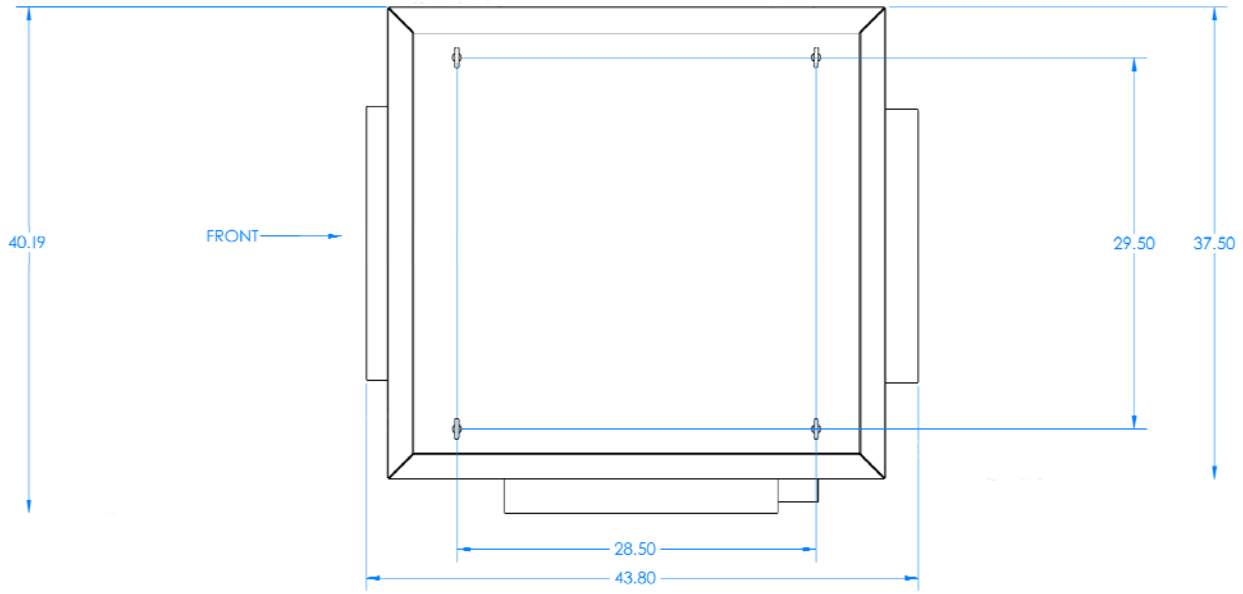

Figure 3-3 OFN Cabinet Top Down View (Combined DRU)

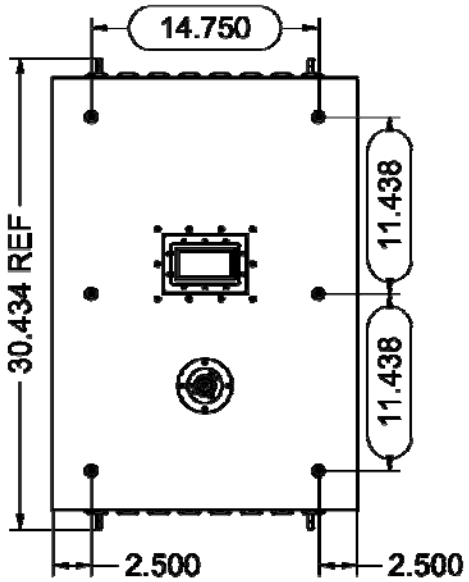

Figure 3-4 OFN Cabinet Top Down View (Independent DRU)

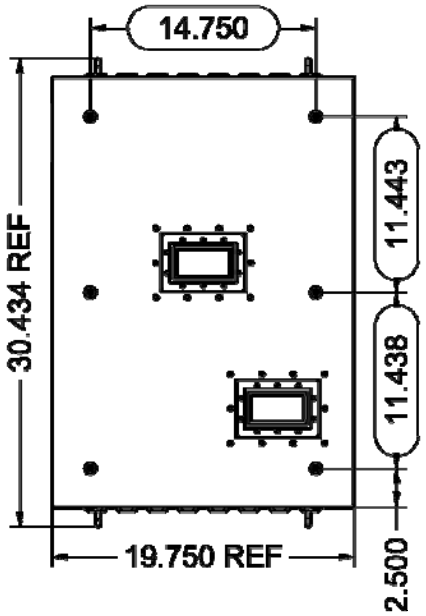

3.6.2 Installation Surface

The load bearing strength of the roof or floor where the repeater cabinets will be placed should be taken into consideration. The repeater cabinets weigh approximately 2200 lbs. combined and rests on an area of 7.85 square feet of roof or floor space.

Before installing the repeater cabinets, check the installation surface structure, flatness and suitability.

3.6.3 Repeater Cabinet Positioning

	Over tipping the repeater may cause it to fall over, resulting in personal injury or loss of life.

- The methods described in Section 3.6.1 can be used to move the repeater cabinets to the required installation location.
- Unbolt the cabinet's feet from the pallet before attempting to remove it from the pallet.
- Position the repeater cabinets according to the site drawings (if available).
- The repeater cabinet must be bolted to a load frame, to the roof surface, or to the floor at all sites to prevent possible tipping. Please see Figure 3-5 for mounting hole locations.

Figure 3-5 Repeater Bottom Up View

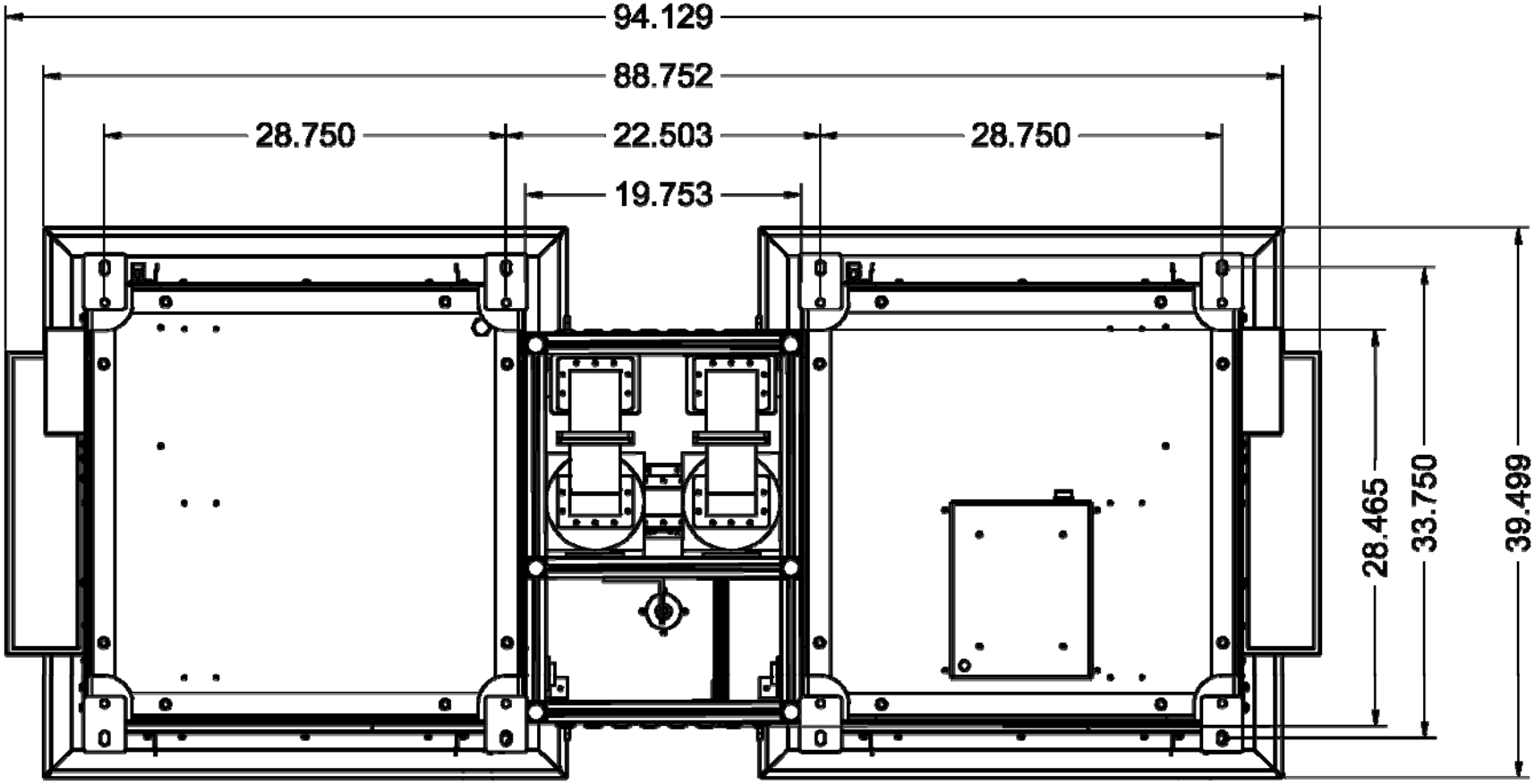

- The repeater cabinets should be positioned within the room to allow for adequate ventilation.
- Sufficient space must be made available in front of the cabinets so that the front doors to be opened and closed, allowing the installer to access the PDU, BMS, LNA, DBPF, LBE, HBE, TRMS, dial-up modem, HPA's and HPA PSU.
- Sufficient space must be made available behind the cabinets so that the rear doors can be opened and closed, allowing the installer to access the 12 VDC battery and component rear panel interfaces (connectors).
- Sufficient space must be made available on the left side of the HB cabinet and right side of the LB cabinet, allowing for cable connections to surge protectors as well as routing ground, AC, communications and alarm wires/cables into the cabinet.
- Sufficient space must be made available above the cabinets for the removal or installation of the cabinet hood, permitting the installer to access the fan box.

3.6.4 Unpacking

Inspect all crates and boxes for exterior damage and make note of any dents, broken seals, or other indications of improper handling. In the event any in transit damage is discovered, report it to UBS.

Remove the repeater cabinets and components (assemblies) from their crates and boxes. Verify that all materials are enclosed as listed on the packing slip and report any shortages to UBS.

Open the front and rear doors on the repeater cabinets and inspect the interior for packing material and carefully remove any material that is found. Do not remove any labeling or tags from the cabinets, drawers/modules, wires/cables or connectors; these are identification markers that make assembly of the repeater system much easier.

3.7 HB Cabinet Electronics Compartment Components

	Always ensure that the circuit breaker in the building/site electrical service panel or AC disconnect device is in the OFF position prior to beginning any installation work in the repeater cabinet. This will prevent injury caused by electric shock and prevent damage to equipment.

Several components must be installed in the HB cabinet electronics compartment:

- Battery Management System (BMS) 12 VDC Rectifiers
- High Band Exciter (HBE)

Figure 3-6 Un-populated HB Cabinet Electronics Compartment

PICTURE TBD

1) Empty Slot for BMS 12 VDC Rectifier Module
2) Bracket for HBE

Figure 3-7 Populated HB Cabinet Electroncis Compartment

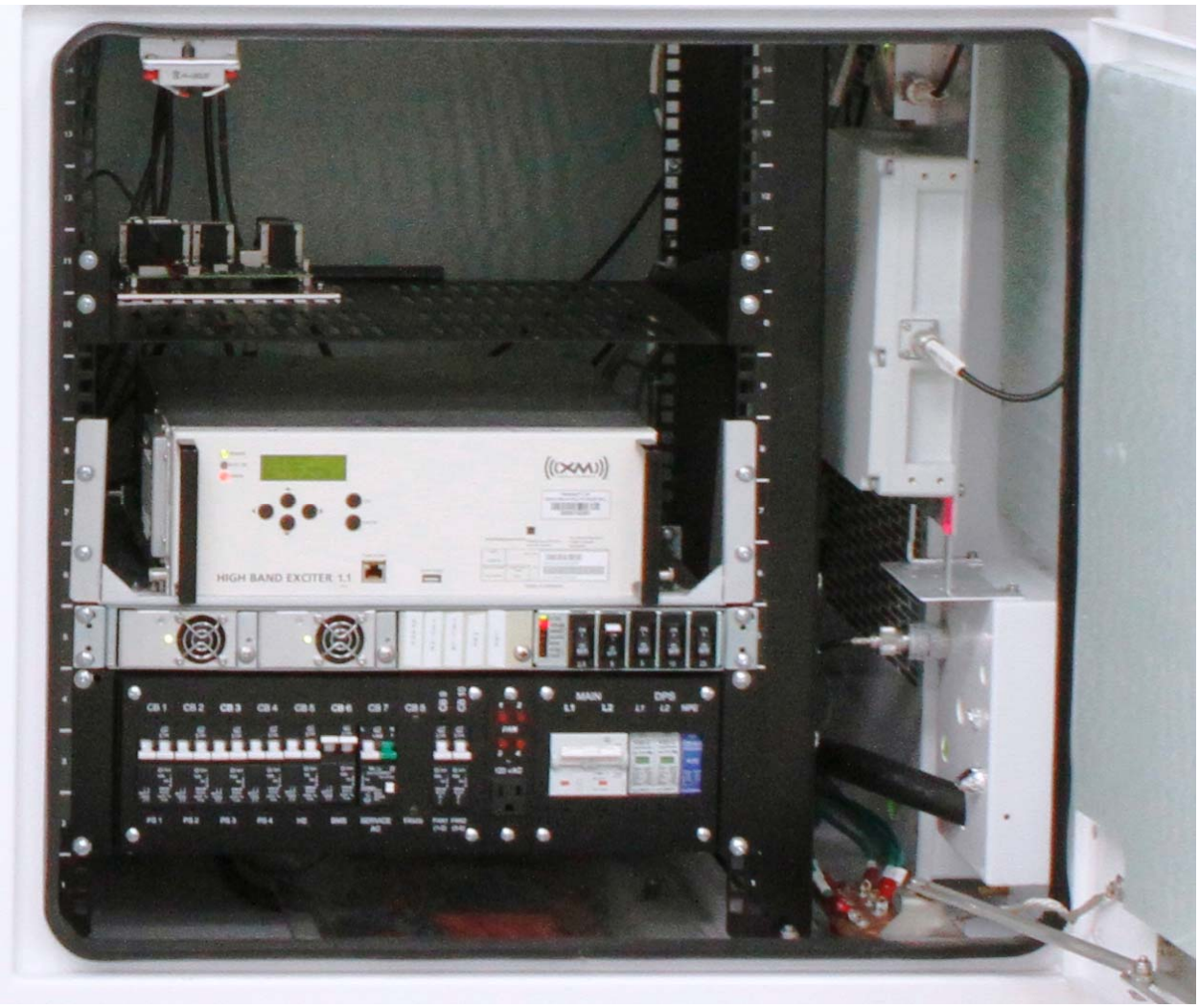

1) BMS 12 VDC Rectifier Module
2) HBE

3.7.1 BMS 12 VDC Rectifier Module

The BMS mounting shelf includes two (2) empty slots for the 12 VDC rectifier modules. Please refer to Figure 3-6, Figure 3-7 or drawings SX03-20000-02-D01 or SX03-20000-03-D01 for the mounting position of the rectifiers.

The BMS 12 VDC rectifier modules should be installed in the following sequence:

1. Slide the first rectifier module into the left-most slot until it stops – see Figure 3-10.
2. Secure the rectifier module to the shelf by tightening the Phillips pan head screw until it stops. As the screw is tightened, the rectifier module will slide all the way into the slot.
3. Slide the second rectifier module into the middle slot until it stops and repeat step 2.

Figure 3-8 12 VDC Rectifier Module Front and Rear Panel

Figure 3-9 BMS Mounting Shelf with Controller

Figure 3-10 BMS Mounting Shelf with 1 Rectifier Module Installed

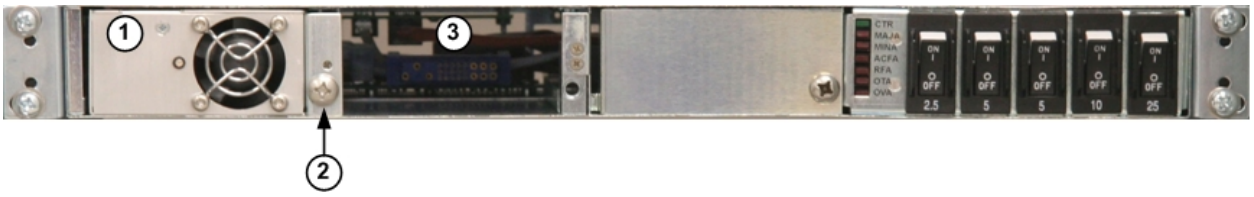

1) 12 VDC Rectifier Module
2) Mounting Screw (supplied with rectifier module)
3) Empty Slot for Second 12 VDC Rectifier Module

3.7.2 High Band Exciter (HBE)

The electronics compartment includes a custom mounting bracket for the HBE. Please refer to Figure 3-6, Figure 3-7 or drawing SX03-20000-02-D01 or SX03-20000-03-D01 for the mounting position of the HBE.

The HBE should be should be installed in the following sequence:

1. Place the HBE on the custom mounting bracket located above the BMS.
2. Secure the HBE to the custom mounting bracket by tightening the four (4) knurled screws (2 located on either side of the HBE; 1 near the front of the HBE and 1 near the back of the HBE) – see Figure 3-12.

Figure 3-11 HBE Mounting Bracket

PICTURE TBD

Figure 3-12 HBE Mounting Bracket with HBE

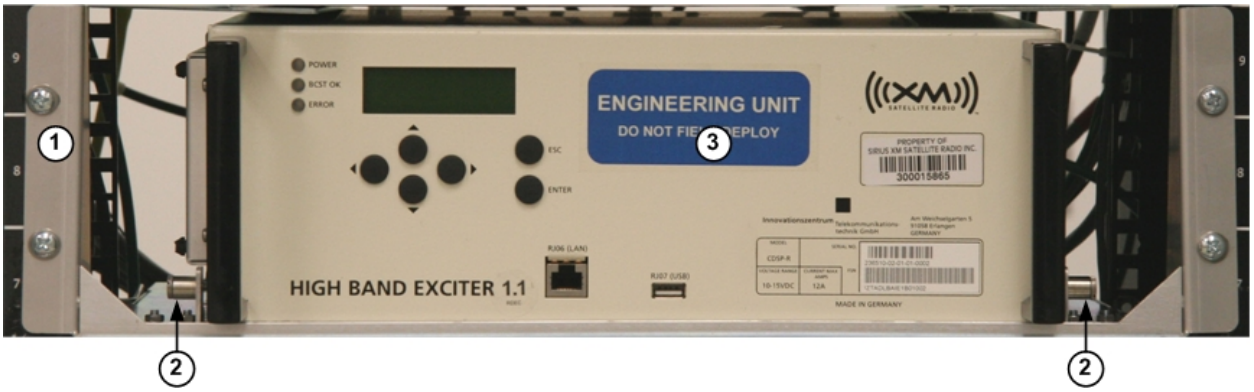

1) HBE Mounting Bracket
2) Knurled Screw
3) HBE

3.8 LB Cabinet Electronics Compartment Components

	Always ensure that the circuit breaker in the building/site electrical service panel or AC disconnect device is in the OFF position prior to beginning any installation work in the repeater cabinet. This will prevent injury caused by electric shock and prevent damage to equipment.

Several components must be installed in the LB cabinet electronics compartment:

- Low Band Exciter (LBE)
- Dial-up Modem (site dependent)

Figure 3-13 Un-populated LB Cabinet Electronics Compartment

PICTURE TBD

1) Bracket for LBE
2) Shelf for Dial-up Modem

Figure 3-14 Populated LB Cabinet Electroncis Compartment

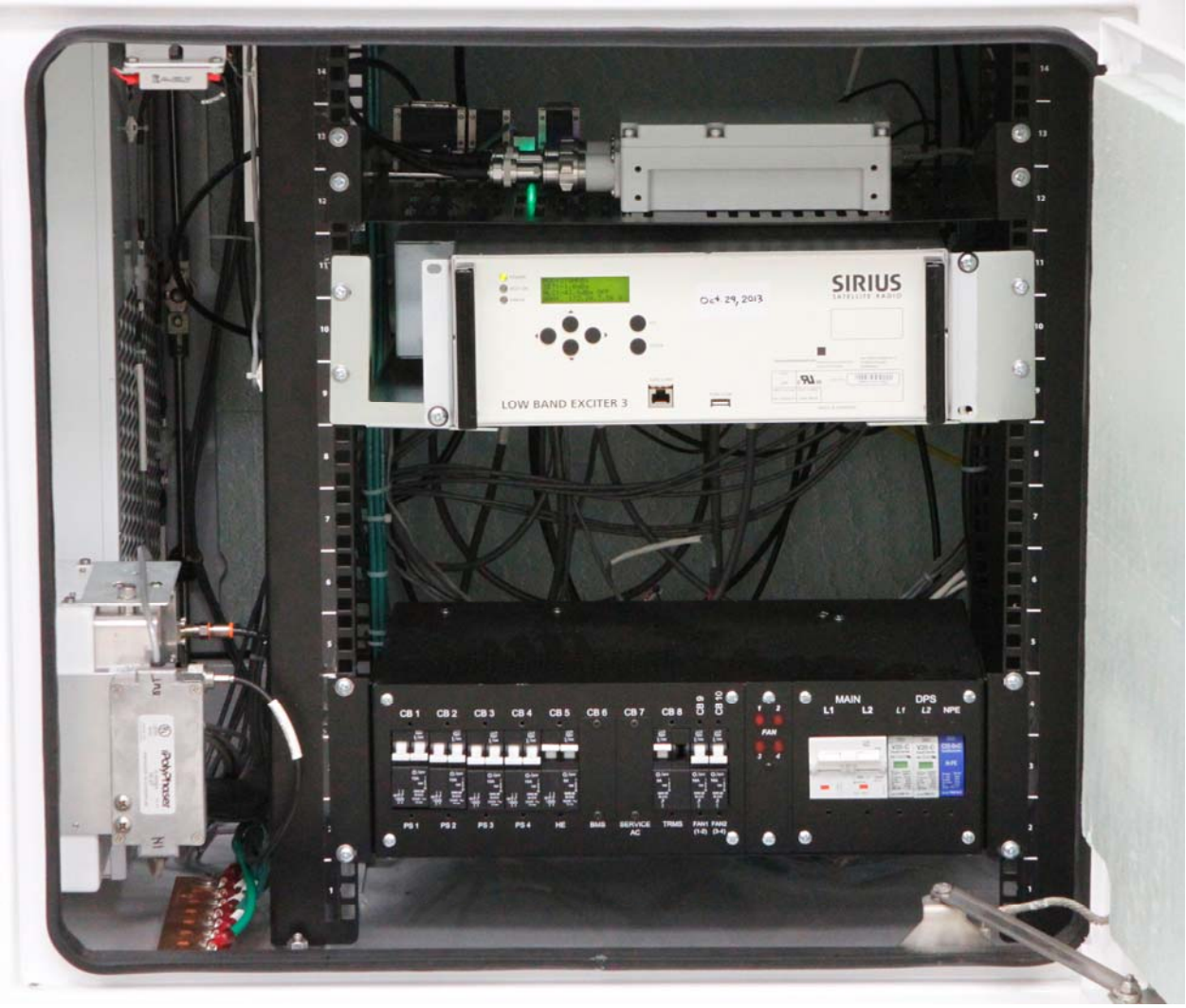

1) LBE
2) Location of Dial-up modem

3.8.1 Low Band Exciter (LBE)

The electronics compartment includes a custom mounting bracket for the LBE. Please refer to Figure 3-13, Figure 3-14 or drawings SX03-20000-02-D01 or SX03-20000-03-D01 for the mounting position of the LBE.

The LBE should be installed in the following sequence:

1. Place the LBE on the custom mounting bracket located above the HBE.
2. Secure the LBE to the custom mounting bracket by installing three (3) Phillips pan head screws (1 located on the left bracket and 2 located on the right bracket) – see Figure 3-16.

Figure 3-15 LBE Mounting Brackets

Figure 3-16 LBE Mounting Brackets with LBE

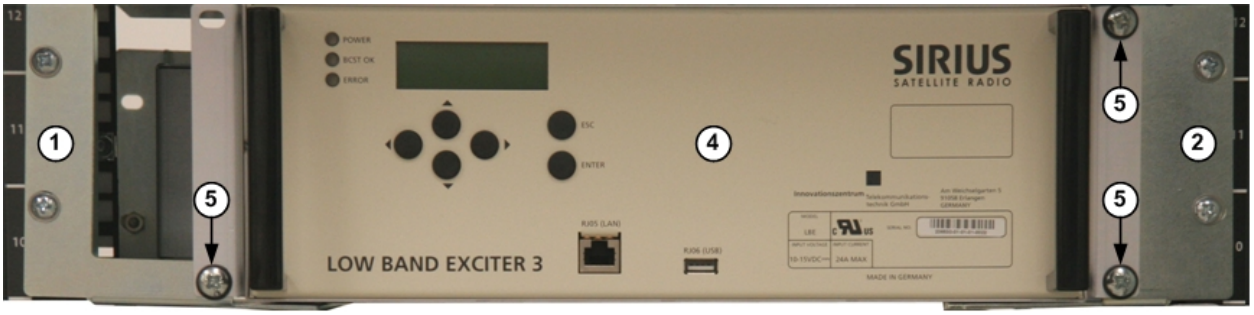

1) LBE Mounting Bracket (left side)
2) LBE Mounting Bracket (right side)
3) Mounting Screw Hole
4) LBE
5) Mounting Screw

3.9 HB and LB Cabinet HPA Compartment Components

	Always ensure that the circuit breaker in the building/site electrical service panel or AC disconnect device is in the OFF position prior to beginning any installation work in repeater cabinet. This will prevent injury caused by electric shock and prevent damage to equipment.

During the installation procedure, several components must be installed in the HPA compartment:

- Low Band and High Band HPA's
- HPA 30 VDC Rectifiers

NOTE: The components/sub-assemblies installed in the HB cabinet HPA compartment and LB cabinet HPA compartment is identical.

Figure 3-17 Un-populated HPA Compartment

PICTURE TBD

1) Empty Slot for HPA 1
2) Empty Slot for HPA 2
3) Empty Slot for HPA 3
4) Empty Slot for HPA 4
5) Empty Slot for HPA PS 1 (30 VDC Rectifier Module)
6) Empty Slot for HPA PS 2 (30 VDC Rectifier Module)
7) Empty Slot for HPA PS 3 (30 VDC Rectifier Module)
8) Empty Slot for HPA PS 4 (30 VDC Rectifier Module)

Figure 3-18 Populated HPA Compartment

1) HPA 1
2) HPA 2
3) HPA 3
4) HPA 4
5) HPA PS 1 (30 VDC Rectifier Module)
6) HPA PS 2 (30 VDC Rectifier Module)
7) HPA PS 3 (30 VDC Rectifier Module)
8) HPA PS 4 (30 VDC Rectifier Module)

3.9.1 HPA Compartment Pre-installation

	Several components mounted on the HPA compartment frame backplane must be loosened prior to installing the HPA's. Not doing so could damage a number of blind mate connectors.

During product shipment, shear forces may cause some components mounted to the HPA compartment frame backplane to become slightly misaligned. It is important that these components are loosened prior to installing the HPA's. Loosening these components allows the HPA's to slide into the HPA compartment frame with fewer restrictions.

Please refer to Figure 3-19 for the locations of the components that should be loosened.

1. Loosen the four (4) 8-32 socket head cap screws which secure the 4-way combiner to the backplane (Figure 3-19, item 1 and item 2).
2. Loosen the two (2) 8-32 socket head cap screws which secure the HPA 4 input adapter to the backplane (Figure 3-19, item 3).
3. Loosen the two (2) 8-32 socket head cap screws which secure the HPA 3 input adapter to the backplane (Figure 3-19, item 4).
4. Loosen the two (2) 8-32 socket head cap screws which secure the HPA 2 input adapter to the backplane (Figure 3-19, item 5).
5. Loosen the two (2) 8-32 socket head cap screws which secure the HPA 1 input adapter to the backplane (Figure 3-19, item 6).

Once the HPA compartment frame backplane components have been loosened, the installer can proceed to install the HPA's.

Figure 3-19 HPA Compartment Frame Backplane

PICTURE TBD

3.9.2 High Power Amplifier (HPA)

	Always install the high power amplifiers with the aid of a second handler. The high power amplifier weighs approximately 55 lbs.

The HPA compartment frame includes four (4) slots for the HPA's. Please refer to Figure 3-17, Figure 3-18 or drawings SX03-20000-02-D01 or SX03-20000-03-D01 for the mounting position of the HPA's.

The HPA's should be installed in the following sequence:

1. Using two handlers, one located on each side of the HPA, lift the HPA and position it level to the left most open space in the HPA compartment frame.
2. Carefully line up the HPA sliders (1 located on the top and 1 located on the bottom of the HPA) with the slide rails mounted in the HPA compartment frame – see Figure 3-22.
3. Slowly push the HPA into the HPA compartment frame until it stops.
4. There are three (3) blind mate connectors located on the HPA rear panel which are aligned with corresponding connectors on the HPA compartment frame backplane – see Figure 3-21. Ensure that the connectors are aligned properly and slowly push the HPA into the backplane until it stops. At this point, the back side of the HPA front panel should be flush with the HPA compartment frame.
5. Secure the HPA in place by tightening the 10-32 Phillips head captive screw (located at the top of the HPA front panel) with a torque rating of 19.2 Inch Lbs. – see Figure 3-22.
6. Place the magnetic plate at the bottom of the HPA front panel and tighten the 10-32 Phillips head captive screw with a torque rating of 19.2 Inch Lbs. Note: The magnetic plate must be installed in order for the HPA to power up later on.
7. Repeat steps 1 through 6 for the remaining three (3) HPA's.

Figure 3-20 HPA Front Panel

1) Handle

Figure 3-21 HPA Rear Panel

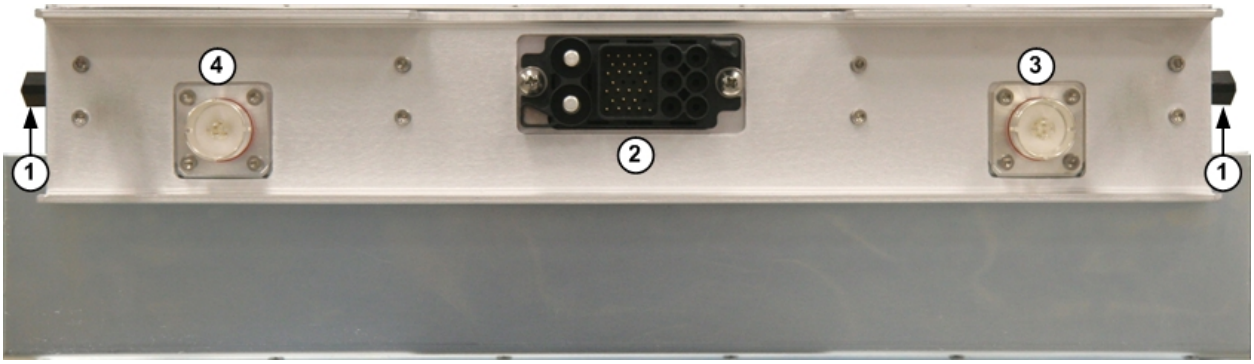

1) Slider
2) DC and Control Connector
3) 7/8” Blind Mate RF Input Connector
4) 7/8” Blind Mate RF Output Connector

Figure 3-22 HPA Compartment (before and after)

PICTURE TBD

1) Slide Rail
2) Mounting Screw Hole Location
3) 10-32 Phillips Head Captive Mounting Screw
4) Magnetic Plate
5) Magnetic Plate 10-32 Phillips Head Captive Mounting Screw

3.9.3 Finalize HPA Installation

	Open or loose RF connections during operation may cause electric arcs that can cause burns and eye injuries, as well as damage equipment. Always ensure that all HPA compartment frame backplane components are tightened once the HPA's are installed.

Once the installation of the HPA's is complete, the components which are mounted to the HPA compartment frame backplane must be secured in place. A torque rating of 10.8 Inch Lbs. must be used to tighten the 8-32 socket head cap screws which secure these components to the HPA compartment frame backplane.

3.9.4 HPA PSU 30 VDC Rectifier Module

The two (2) HPA PSU mounting shelves each include two (2) empty slots for the HPA PSU 30 VDC rectifier modules. Please refer to Figure 3-17, Figure 3-18 or drawings SX03-20000-02-D01 or SX03-20000-03-D01 for the mounting position of the rectifier modules.

The HPA PSU 30 VDC rectifier modules should be installed in the following sequence:

1. Slide the black release button on the rectifier module front grill/cover cover to the right to release the grill/cover from the front of the rectifier module.
2. Position the rectifier module so that the open grill cover is facing down.
3. Slide the rectifier module into either of the empty slots on the left most HPA PSU mounting shelf until it stops – see Figure 3-24.
4. To secure the rectifier module in place, lift the grill cover up and push it towards the rectifier module until it clicks in place. As the grill cover is pushed in place, the rectifier module will slide all the way into the slot.
5. Repeat steps 1 through 4 for the three (3) remaining rectifier modules.

Figure 3-23 HPA PSU 30 VDC Rectifier Module

1) Front Grill/Cover
2) Front Grill/Cover Release Button
3) Rear Panel

Figure 3-24 HPA PSU Shelf (before and after)

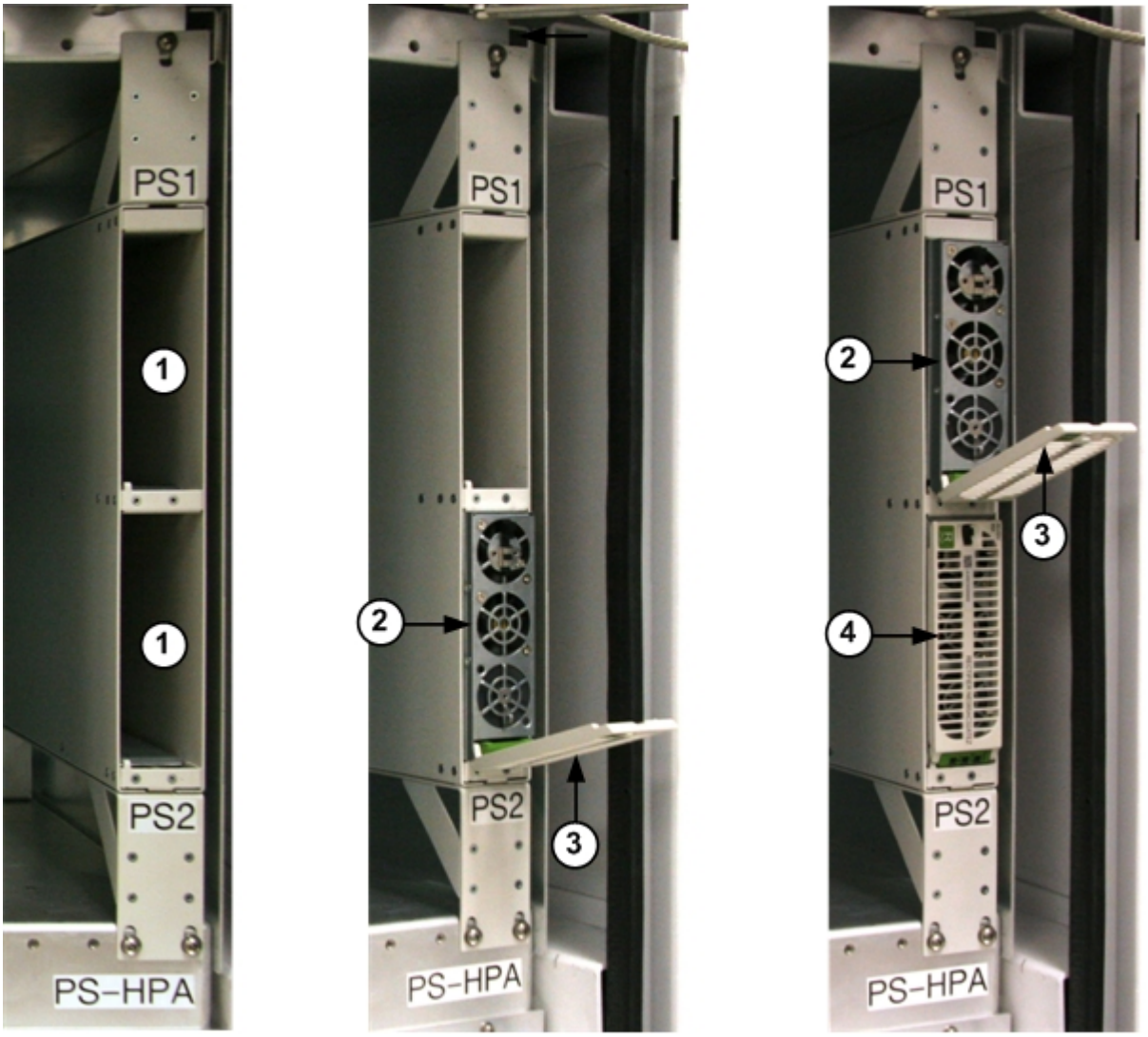

1) Open Slot for Rectifier Module
2) Disengaged Rectifier Module with Open Grill Cover
3) Open Grill Cover
4) Fully Secured Rectifier Module with Closed Grill Cover

3.10 HB Cabinet Internal Wire/Cable Connections

Once the HBE is mounted in the HB cabinet electronics compartment, a number of wires/cables must be connected to the HBE.

Figure 3-25 HB Cabinet Electronics Compartment (with no connections)

PICTURE TBD

1) HBE Rear Panel

Figure 3-26 HB Cabinet Electronics Compartment Components (with connections)

PICTURE TBD

3.10.1 Ground and AC Connections

All HB cabinet internal ground wires are pre-wired to the cabinet ground bar. During the installation procedure, several components must be connected to the ground bar via the pre-wired ground wires. Please see the subsequent sections of this manual.

All HB cabinet internal AC components are pre-wired to the cabinet PDU. Only the cabinet PDU needs to be connected to building/site electrical service panel (or AC disconnect device).

3.10.2 High Band Exciter (HBE)

During the installation procedure, a number of wires/cables must be connected to the HBE rear panel. Please refer to Table 3-6 or drawing SX03-21900-02-D06.

The cables should be connected in the order that they appear in Table 3-6.

⚠	Any RF cable, which is terminated with a SMA connector, should be tightened with a 5/16" torque wrench to avoid over tightening and damaging the cable connector or mating connector.

Figure 3-27 HBE Rear Panel

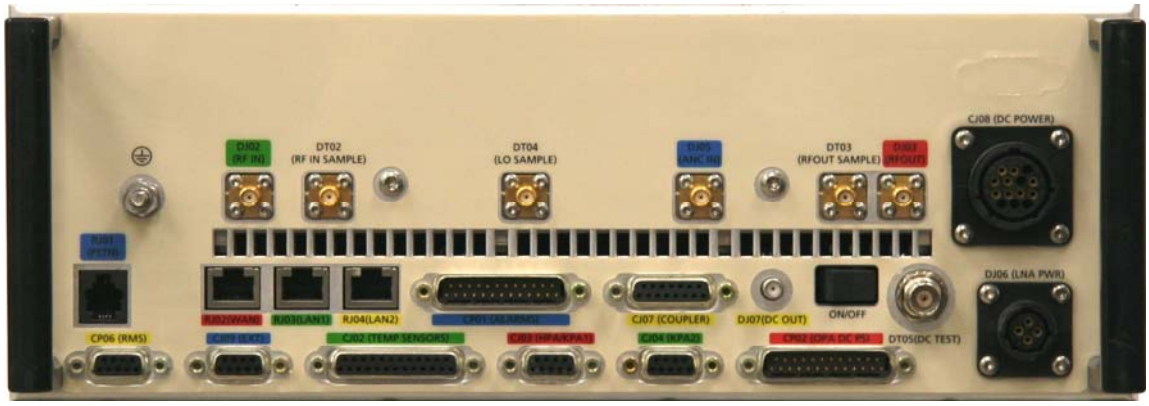

Table 3-6 HBE Rear Panel Connections

HBE Port	Name	Type	Cable Number
N/A	N/A	Ground Post	SX03-21916-05
CJ02	TEMP SENSORS	DB-25 (F)	SX03-21905-01
CJ03	HPA/KPA1	DB-9 (F)	SX03-21906-01
CP02	OPA DC PS	DB-25 (M)	SX03-10919-01
RJ02	WAN	RJ-45	SX03-22905-02
RJ03	LAN	RJ-45	SX03-22905-03
DJ06	LNA PWR	4-pos CPC	SX03-10902-01
CJ08	DC POWER	14-pos CPC	SX03-10903-01
DJ02	RF IN	SMA (F), 50 ohm	SX03-10909-02
DJ05	ANC IN	SMA (F), 50 ohm	SX03-21917-06
DJ03	RF OUT	SMA (F), 50 ohm	SX03-21917-01

3.11 LB Cabinet Internal Wire/Cable Connections

Once the LBE and Dial-up modem (where applicable) are mounted in the LB cabinet electronics compartment, a number of wires/cables must be connected to the LBE and Dial-up modem (where applicable).

Figure 3-28 LB Cabinet Electronics Compartment (with no connections)

PICTURE TBD

1) LBE Rear Panel

Figure 3-29 LB Cabinet Electronics Compartment Components (with connections)

PICTURE TBD

3.11.1 Ground and AC Connections

All LB cabinet internal ground wires are pre-wired to the cabinet ground bar. During the installation procedure, several components must be connected to the ground bar via the pre-wired ground wires. Please see the subsequent sections of this manual.

All LB cabinet internal AC components are pre-wired to the cabinet PDU. Only the cabinet PDU needs to be connected to building/site electrical service panel (or AC disconnect device).

3.11.2 Low Band Exciter (LBE)

During the installation procedure, a number of wires/cables must be connected to the LBE rear panel.

For a Combined DRU, please refer to Table 3-7 or drawing SX03-22900-02-D06. The cables should be connected in the order that they appear in Table 3-7.

For an Independent DRU, please refer to Table 3-8 or drawing SX03-22900-03-D06. The cables should be connected in the order that they appear in Table 3-8.

	Any RF cable, which is terminated with a SMA connector, should be tightened with a 5/16” torque wrench to avoid over tightening and damaging the cable connector or mating connector.

Figure 3-30 LBE Rear Panel

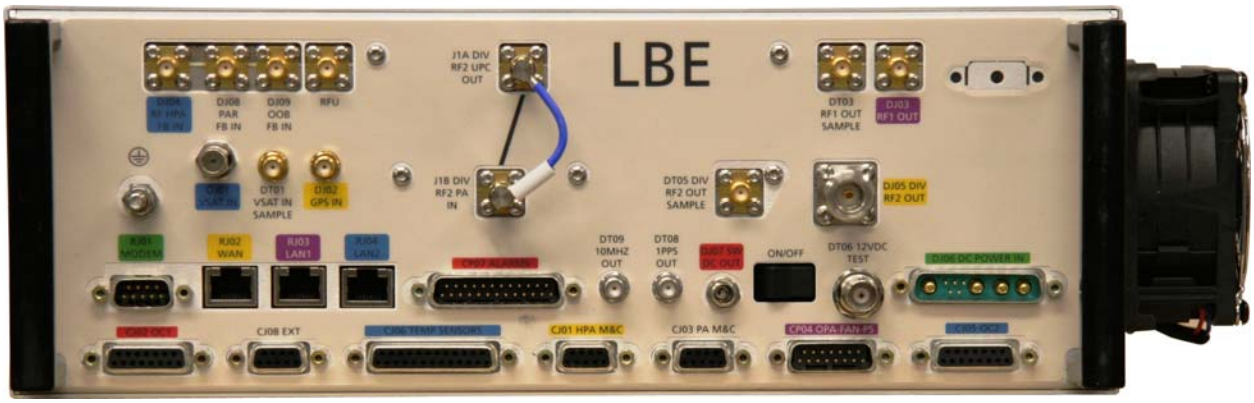

Table 3-7 LBE Rear Panel Connections – Combined DRU

LBE Port	Name	Type	Cable Number
N/A	N/A	Ground Post	SX03-21916-05
CJ02	OC1	DB-15 (F)	SX03-22904-02
CJ06	TEMP SENSORS	DB-25 (F)	SX03-10901-01
CJ01	HPA M&C	DB-9 (F)	SX03-22912-01
CP04	OPA-FAN-PS	DB-15 (M)	SX03-10920-01
RJ01	Modem	DB-9 (M)	N/A
RJ02	WAN	RJ-45	SX03-10905-04
RJ03	LAN	RJ-45	SX03-22905-02
RJ04	LAN	RJ-45	SX03-10905-01
CP07	ALARMS	DB-25 (M)	SX03-10922-01
DJ07	SW DC OUT	2.5 mm Locking DC Power Jack	SX03-10928-01
DJ06	DC POWER IN	Combination Sub-D	SX03-22906-01
DJ01	VSAT IN	F (F), 75 ohm	SX03-10910-01
DJ02	GPS IN	SMA (F), 50 ohm	SX03-10909-03
DJ05	DIV RF2 OUT	N (F), 50 ohm	TBD
DJ04	RF HPA FB IN	SMA (F), 50 ohm	SX03-22918-02
DJ03	RF1 OUT	SMA (F), 50 ohm	SX03-22918-01

Table 3-8 LBE Rear Panel Connections – Independent DRU

LBE Port	Name	Type	Cable Number
N/A	N/A	Ground Post	SX03-21916-05
CJ02	OC1	DB-15 (F)	SX03-22904-02
CJ06	TEMP SENSORS	DB-25 (F)	SX03-10901-01
CJ01	HPA M&C	DB-9 (F)	SX03-22912-01
CP04	OPA-FAN-PS	DB-15 (M)	SX03-10920-01
CJ05 (*)	OC2	DB-15 (F)	SX03-22904-01
RJ01	Modem	DB-9 (M)	N/A
RJ02	WAN	RJ-45	SX03-10905-04
RJ03	LAN	RJ-45	SX03-22905-02
RJ04	LAN	RJ-45	SX03-10905-01
CP07	ALARMS	DB-25 (M)	SX03-10922-01
DJ07	SW DC OUT	2.5 mm Locking DC Power Jack	SX03-10928-01
DJ06	DC POWER IN	Combination Sub-D	SX03-22906-01
DJ01	VSAT IN	F (F), 75 ohm	SX03-10910-01
DJ02	GPS IN	SMA (F), 50 ohm	SX03-10909-03
DJ05	DIV RF2 OUT	N (F), 50 ohm	TBD
DJ04	RF HPA FB IN	SMA (F), 50 ohm	SX03-22918-02
DJ03	RF1 OUT	SMA (F), 50 ohm	SX03-22918-01

* Cable SX03-22904-01 will only be provided and connected to CJ05 in an Independent DRU configuration.

3.12 External Input Signal Interfaces

3.12.1 HB Cabinet

During the installation procedure, one external input signal connection must be made to the HB cabinet:

- S-Band Antenna (S-SAT)

Figure 3-31 HB Cabinet Cable Entrance

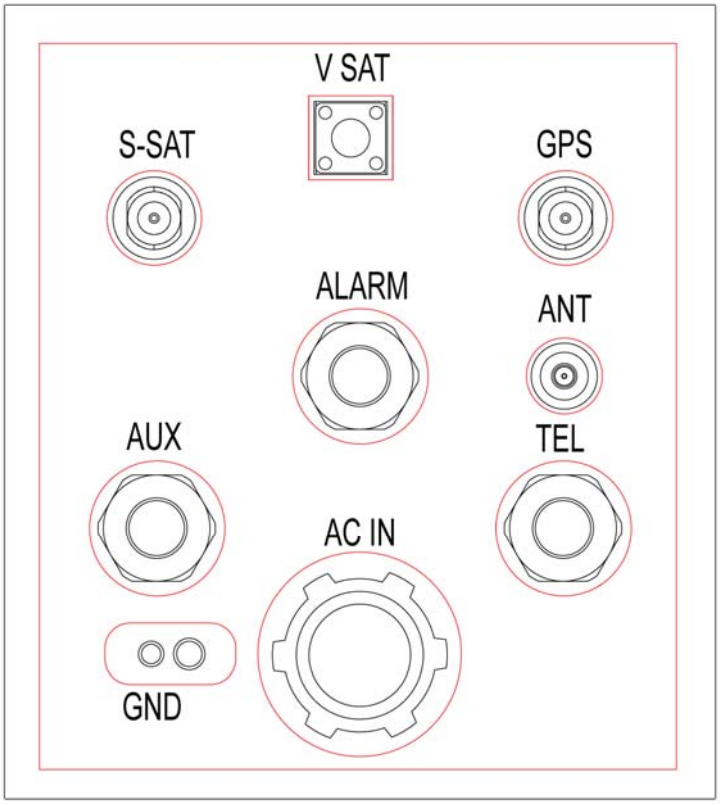

3.12.2 S-Band Antenna

The following steps should be performed to connect the S-Band antenna (HBE RF input) to the DRU:

1. Run a cable from the S-Band antenna to the DRU.
2. If the cable does not already have a male N connector on it, install a male N connector on the end of the cable.
3. Attach and securely tighten the connector to the female N connector marked "S-SAT", which is located on the bottom-left side of the DRU – see Figure 3-31.

3.12.3 LB Cabinet

During the installation procedure, several external input signal connections must be made to the LB cabinet:

- Ku-Band VSAT Antenna (V SAT)
- GPS Antenna (GPS)

Figure 3-32 LB Cabinet Cable Entrance

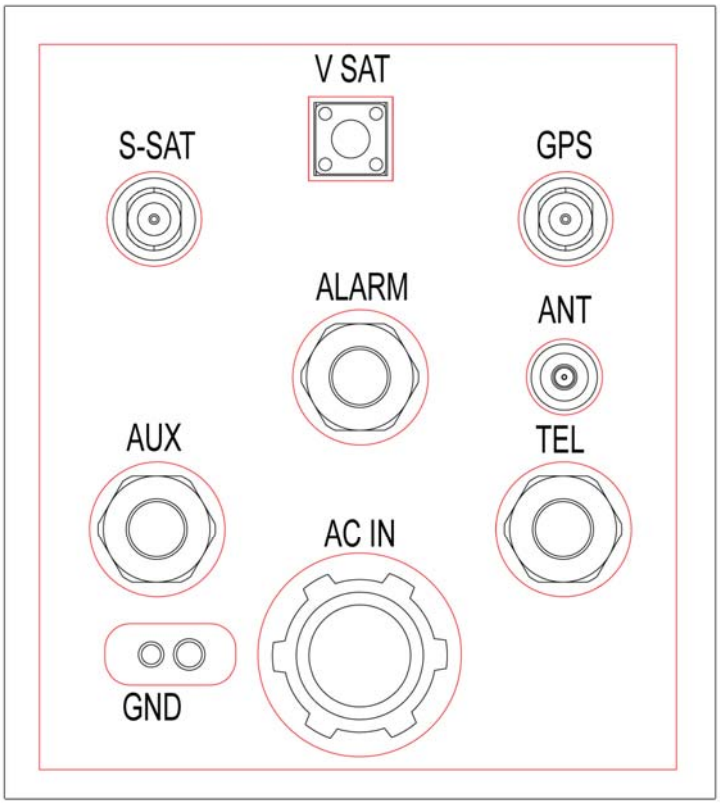

3.12.4 Ku-Band Antenna

The following steps should be performed to connect the Ku-Band VSAT antenna (LBE RF input) to the DRU:

1. Run a cable from the Ku-Band VSAT antenna to the DRU.
2. If the cable does not already have a male F connector on it, install a male F connector on the end of the cable.
3. Attach and securely tighten the connector to the female F connector marked “V SAT”, which is located on the bottom-left side of the DRU – see Figure 3-32.

3.12.5 GPS Antenna

The following steps should be performed to connect the GPS antenna (LBE GPS input) to the DRU:

1. Run a cable from the GPS antenna to the DRU.
2. If the cable does not already have a male N-type connector on it, install a male N-type connector on the end of the cable.
3. Attach and securely tighten the connector to the female N-type connector marked "GPS", which is located on the bottom-left side of the DRU – see Figure 3-32.

3.13 Communications Interfaces

3.13.1 PSTN Phone Line

	To reduce the risk of fire, use only #26 AWG or larger (I.e. #24 AWG) UL listed phone line cord.

The following steps should be performed to connect the PSTN phone line to the surge protector in the LB cabinet (where applicable):

1. Run a #26 AWG or larger phone line cord from the building/site PSTN termination point to the DRU.
2. Loosen the domed sealing nut on the LB cabinet cable gland marked "TEL", which is located on the bottom-right side of the DRU – see Figure 3-32.
3. Feed approximately 24 inches of phone line cord into the DRU through the "TEL" cable gland.
4. Remove the lid screws from the Telco surge protector.
5. Install the cable grommets on the Telco surge protector:
   - Use the small grommet for cord with a 0.114 to 0.225 inch diameter
   - Use the large grommet for cord with a 0.250 to 0,350 inch diameter
6. Feed the phone line cord through the bottom grommet on the Telco surge protector.
7. Cut the cable to the proper length and remove approximately 1 inch of the outer insulation to expose the individual wires.
8. Remove 0.25 inches of insulation from each wire to expose the copper conductor.
9. Insert the copper conductor into the "SURGE" screw terminals on the surge protection modules and tighten the screws.
10. Replace the Telco surge protector lid.

Figure 3-33 Telco Surge Protector

1) Telco Surge Protector

Figure 3-34 Telco Surge Protector (open cover)

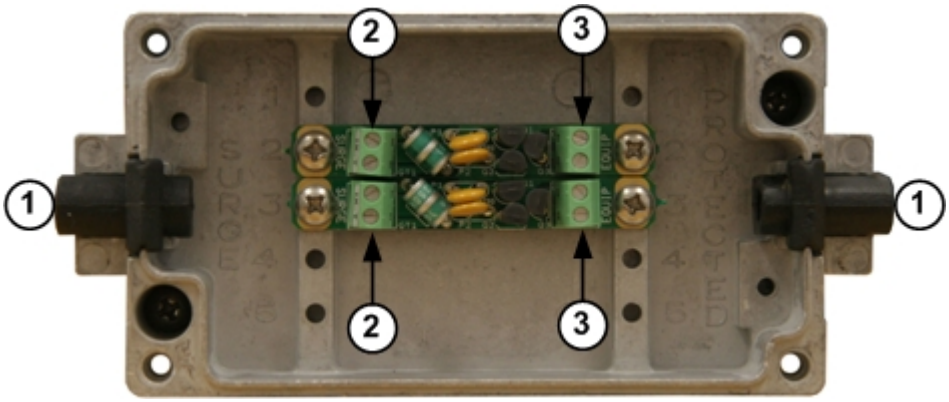

1) Cable Grommet
2) Screw Terminal (Surge Side)
3) Screw Terminal (Protected Side)

3.14 Shelter/Room Alarm Connections

During the installation procedure, several shelter/room alarm contacts/sensors (where applicable) can be connected to the Break Out Board in the LB cabinet.

The following steps should be performed to connect an external alarm to the DRU:

1. Run a cable from the alarm contact/sensor to the DRU.
2. Loosen the domed sealing nut on the LB cabinet cable gland marked “ALARM”, which is located on the bottom-left side of the DRU – see Figure 3-32.
3. Feed approximately 72 inches of cable into the DRU and tighten the domed sealing nut on the cable gland.
4. Run the cable along the bottom of the DRU, then up the left wall to the external alarm terminal block – see Figure 3-35.
5. Remove 4 inches of the outer insulation to expose the individual wires.
6. Remove 0.2 inches of insulation from the wires to expose the copper conductors.
7. Remove the appropriate jumper cable(s) from the Break Out Board pluggable terminal block(s).
8. Insert the wires into the appropriate pluggable terminal block contacts and tighten the clamping screws – see Table 3-9 for a list of contacts.

Figure 3-35 Break Out Board Installed in DRU

Figure 3-36 Break Out Board

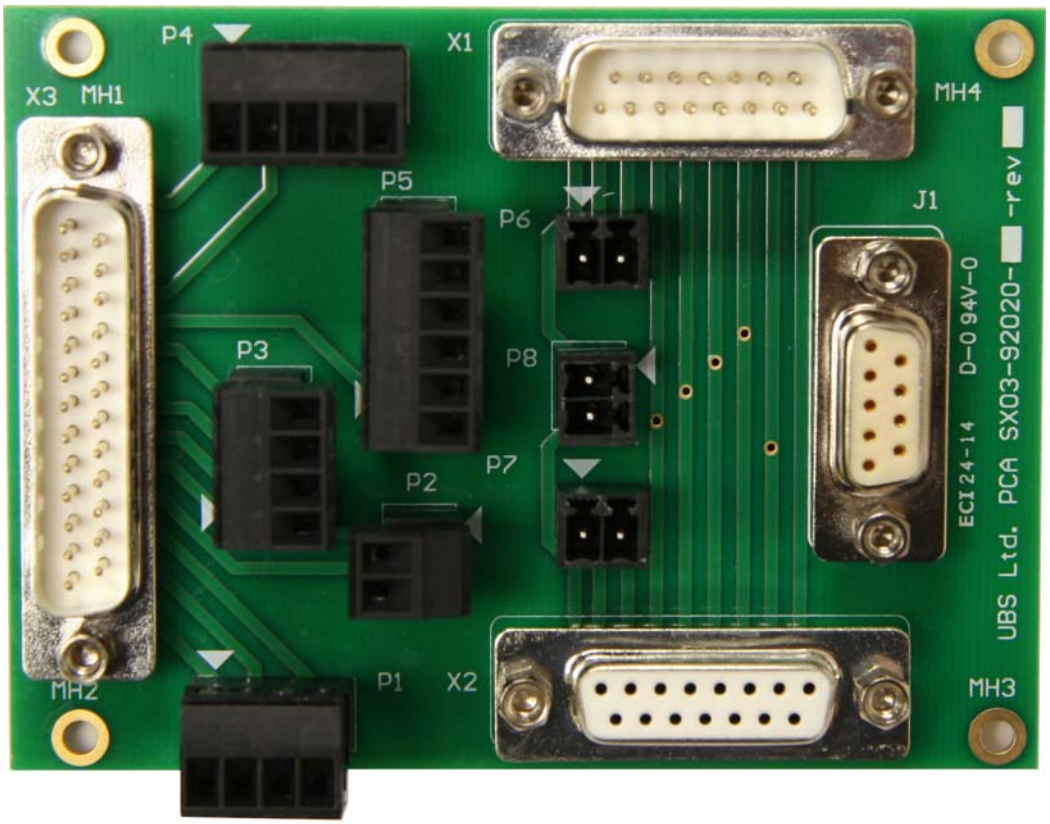

Table 3-9 Break Out Board External Alarm Contacts

Alarm	Positive (+) Contact	Negative (-) Contact
Low Temp	P1 - 2	P1 - 1 and 3
High Temp	P1 - 4	P1 - 1 and 3
Smoke	P2 - 2	P2 - 1
HVAC1	P3 - 2	P3 - 1 and 3
HVAC2	P3 - 4	P3 – 1 and 3
Blower	P4 - 2	P4 - 1 and 3
Dehydrator	P4 - 4	P4 - 1 and 3
Shelter Door	P5 - 2	P5 - 1 and 3
Spare	P5 - 4	P5 - 1 and 3

Note: P4 pin 5 and P5 pin 6 are ground pins.

3.15 RF Output Interfaces

	Opening RF lines during operation may cause electric arcs that can cause burns and eye injuries. RF output ports 1 and 2 must be terminated into a broadcast antenna or test load.

The DRU-1k includes two (2) RF output ports, which are located on the outside of the OFN cabinet, on the top panel.

During the installation procedure, these outputs must be terminated into a broadcast antenna or test load.

3.15.1 Configuration

The HB, LB and LBD transmit signal mapping depends on the DRU configuration – see Table 3-10.

Table 3-10 RF Output Mapping

Port	Combined DRU	Independent DRU
Output 1	HB and LB	HB and LBD
Output 2	LBD	LB

Figure 3-37 Combined DRU RF Output Ports

Picture TBD

1) Output 1 (Combined RF Output Port) – WR340 Flange
2) Output 2 (Independent RF Output Port) – 7/8” EIA Flange

Figure 3-38 Indepentent DRU RF Output Ports

Picture TBD

1) Output 1 (Combined RF Output Port) – WR340 Flange
2) Output 2 (Independent RF Output Port) – WR340 Flange

3.15.2 Terminating a WR3 40 Flange Output

The following steps should be performed to terminate a WR 340 flange output:

1. Place the rubber ring in the WR 340 flange groove – see Figure 3-39.
2. Connect the transmission line to the WR 340 flange according to site drawings.
3. Secure the transmission line in place by installing a 1/4-20x1" hex head bolt with 1/4" flat washer and 1/4" spring washer in each one of the holes (3 total) – see Figure 3-39. A 7/16" torque wrench with a rating of 61.5 In. Lbs. should be used to tighten the bolt.

Figure 3-39 WR 340 Flange Connection (before and after)

Picture TBD

1) Rubber Ring
2) 1/4-20x1" Hex Head Bolt with 1/4" Flat Washer and 1/4" Lock Washer

3.15.3 Terminating a 7/8" EIA Flange Output

The following steps should be performed to terminate a 7/8" EIA flange output:

1. Insert the inner connector into the 7/8" EIA flange – see Figure 3-40.
2. Place the rubber ring in the 7/8" EIA flange groove – see Figure 3-40.
3. Connect the transmission line to the 7/8" EIA flange according to site drawings.
4. Secure the transmission line in place by installing a 1/4-20x1" hex head bolt with 1/4" flat washer and 1/4" spring washer in each one of the holes (3 total) – see Figure 3-39. A 7/16" torque wrench with a rating of 61.5 In. Lbs. should be used to tighten the bolt.

Figure 3-40 WR 340 Flange Connection (before and after)

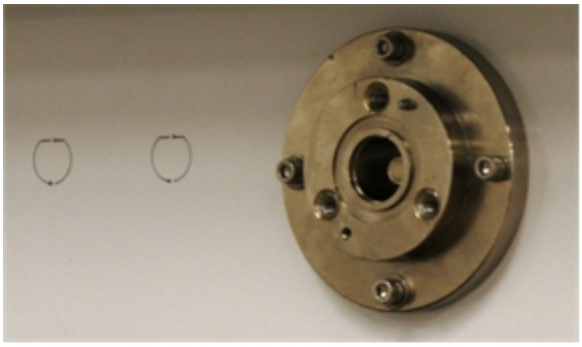

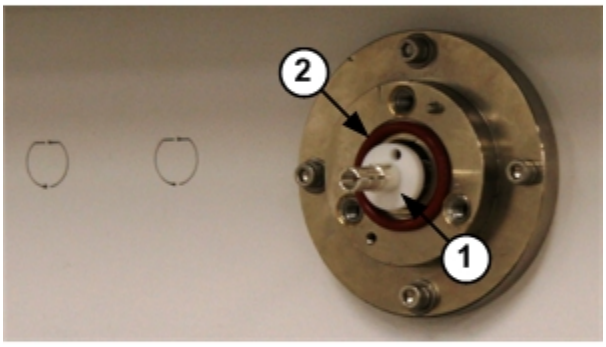

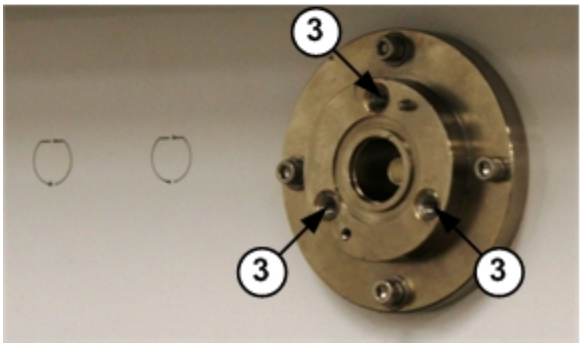

3) Inner Connector
4) Rubber Ring
5) 1/4-20x1” Hex Head Bolt with 1/4” Flat Washer and 1/4” Lock Washer

3.16 AC Power

3.16.1 General Requirements

A certified Electrician should connect the repeater to the building/site electrical service panel to meet all local and national electrical codes, and according to the repeater electrical drawing(s).

- AC Supply Voltage: 190 – 264 VAC (208 VAC nominal), Single Phase
- Frequency: 47 to 63 Hz
- Power Consumption: 19.1 kVA max.

	Verify that the AC supply voltage is within the specified range and check all power cables for damage.

3.16.2 Repeater Cabinet Ground Connection

	The repeater cabinets must be connected to the building/site's main ground terminal.

An external ground conductor can be secured to the ground stud located on the left side of the HB cabinet using the XX nut – see Figure 3-41. A torque rating of XX In. Lbs. should be used to tighten the nut.

An external ground conductor can be secured to the ground stud located on the right side of the LB cabinet using the XX nut – see Figure 3-42. A torque rating of XX In. Lbs. should be used to tighten the nut.

Figure 3-41 HB Repeater Cabinet Cable Entrance and Ground Stud

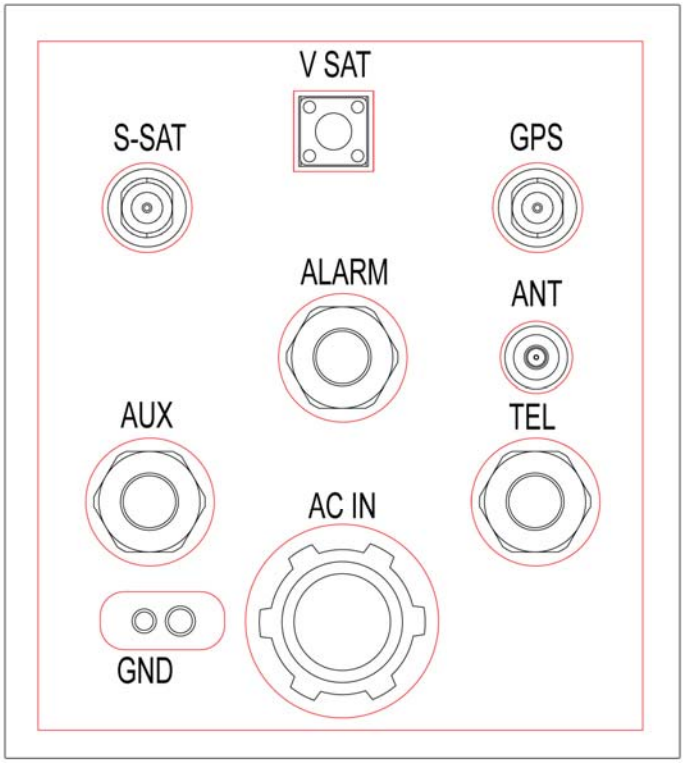

Figure 3-42 LB Repeater Cabinet Cable Entrance and Ground Stud

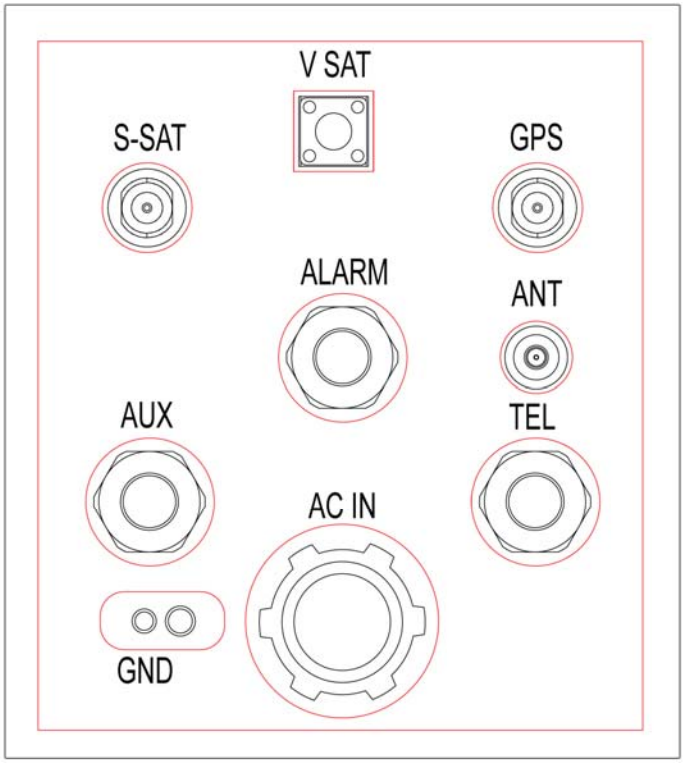

3.16.3 Repeater Cabinet AC Power Connection

Figure 3-43 depicts the recommended repeater AC power connection.

Figure 3-43 AC Power Cable Routing

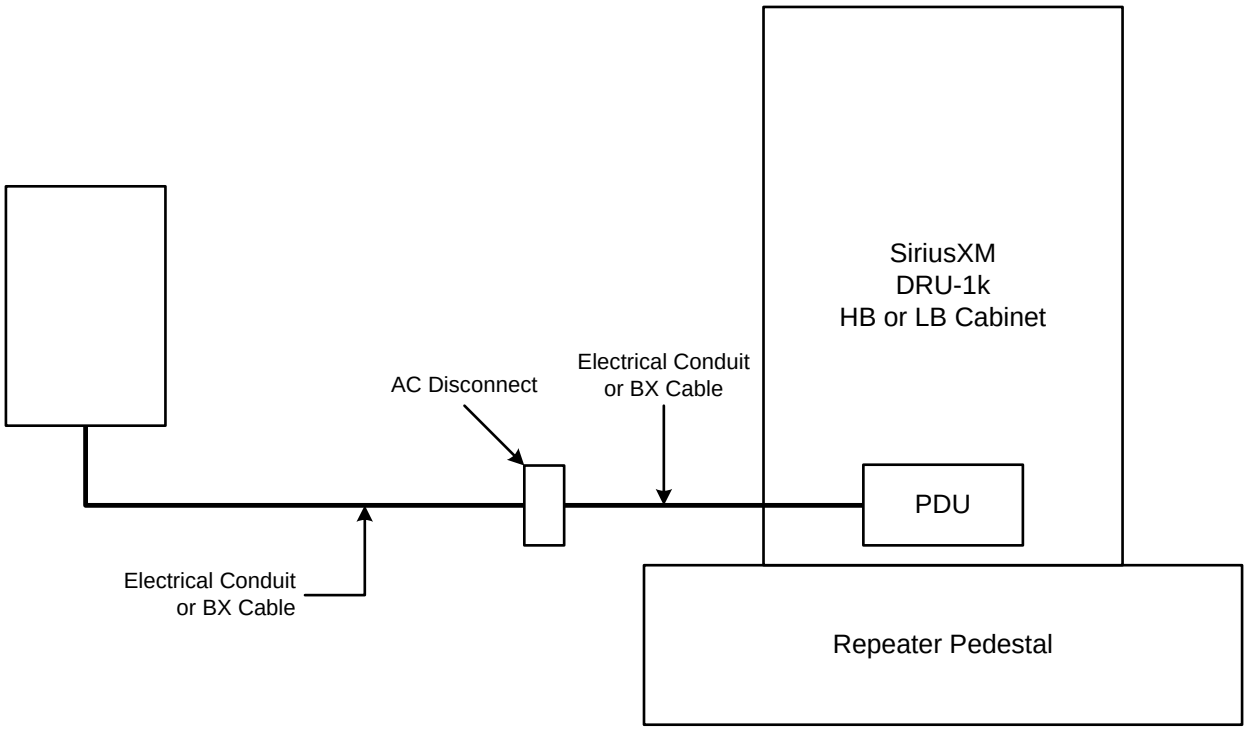

- Arrange for the installation of two (2) AC disconnect device on the repeater pedestal or in close proximity to the repeater cabinet. The AC disconnect device must be connected to the building/site electrical service panel according to all local and national electrical codes.
- Two (2) AC power cables should be run to meet all local and national electrical codes, and according to the repeater electrical drawing(s). This may require the cables to be run inside electrical conduit between the building/site electrical service panel and the repeater cabinets.

Figure 3-44 AC Power Cable Schematic

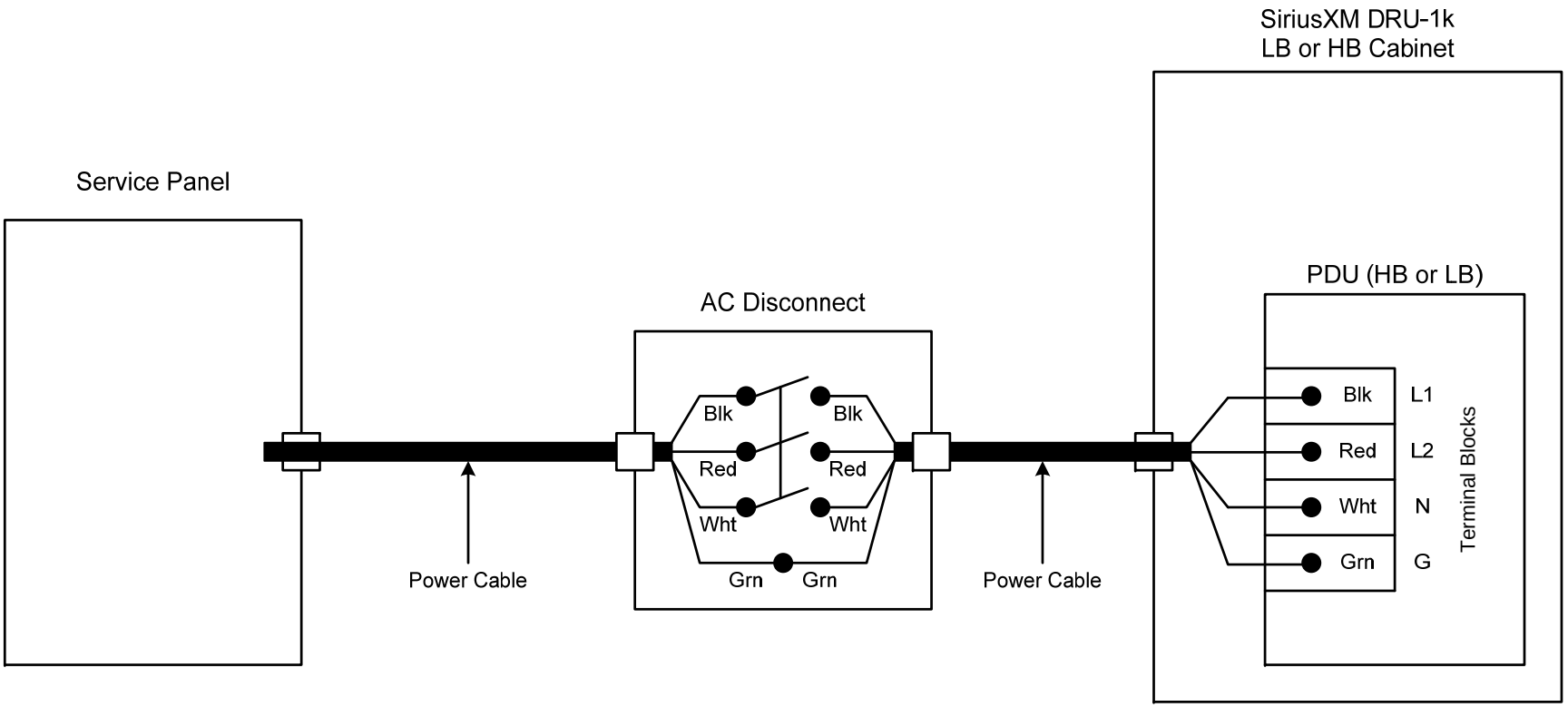

The following steps should be performed to make the electrical connection to the HB cabinet or LB cabinet PDU's once the power cables have been routed into the cabinets and prepped by a certified electrician:

	Place the circuit breakers in the building/site electrical service panel in the OFF position and place a "**DANGER-DO NOT TURN ON - Personnel Working**" sign on the circuit breakers.

1. Remove the terminal block access panel from the back of the HB cabinet PDU by removing the four (4) Phillips head screws – see Figure 3-45.
2. Insert the green wire into the terminal block marked "GND" and tighten the clamping screw – see Figure 3-46.
3. Insert the white wire into the terminal block marked "N" and tighten the clamping screw – see Figure 3-46.
4. Insert the red wire into the terminal block marked "L2" and tighten the clamping screw – see Figure 3-46.
5. Insert the black wire into the terminal block marked "L1" and tighten the clamping screw – see Figure 3-46.
6. Replace the HB cabinet PDU terminal block access panel and verify that all PDU breakers are in the OFF position.
7. Repeat steps 1 through 6 for the LB cabinet PDU.
8. Verify that the circuit breakers in the building/site electrical service panel are still in the OFF position and that the AC disconnect devices are in the OFF position (where applicable).
9. Place the circuit breakers in the building/site electrical service panel in the ON position and remove the sign.
10. Place the AC disconnect devices in the ON position (where applicable).

Figure 3-45 PDU Rear Panel (with access cover installed)

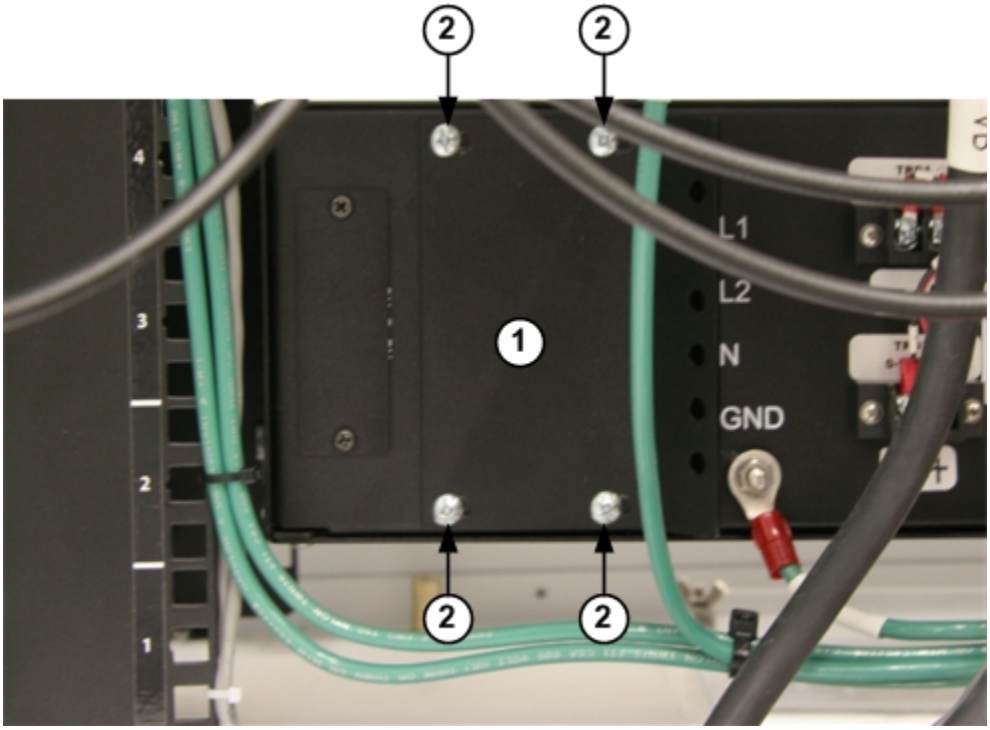

1) Terminal Block Access Panel
2) Access Panel Mounting Screws

Figure 3-46 PDU Rear Panel (with power cable wires installed)

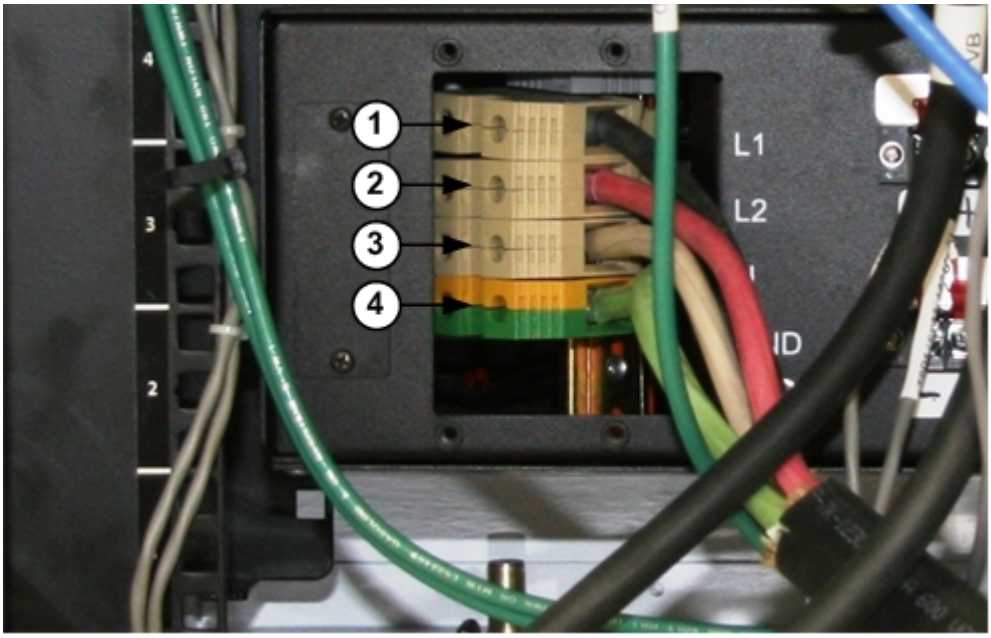

1) Line 1 Terminal Block
2) Line 2 Terminal Block
3) Neutral Terminal Block
4) Ground Terminal Block

This page has intentionally been left blank.

Unique Broadband Systems Ltd.

Chapter 4

Commissioning

Contents

4 Commissioning 4-1
4.1 Introduction 4-1
4.2 Test Equipment 4-1
4.3 Installation Verification 4-1
4.4 Commissioning Procedure 4-2
4.4.1 Repeater AC/DC Power-on 4-2
4.4.1.1 Main Disconnect 4-2
4.4.1.2 High Band Sub-system 4-3
4.4.1.3 Low Band Sub-system 4-4
4.4.2 Repeater Configuration 4-5
4.4.2.1 Low Band Exciter (LBE) Configuration 4-5
4.4.2.2 High Band Exciter (HBE) Configuration 4-5
4.4.2.3 Terrestrial Repeater Monitoring System (TRMS) Configuration 4-5
4.4.3 Placing a Combined DRU in Broadcast Mode 4-5
4.4.3.1 Low Band Sub-system 4-5
4.4.3.2 High Band Sub-system 4-6
4.4.4 Placing an Independent DRU in Broadcast Mode 4-8
4.4.4.1 Low Band Sub-system 4-8
4.4.4.2 High Band Sub-system 4-9

This page has intentionally been left blank.

4 Commissioning

4.1 Introduction

This section describes the power-on, configuration and RF test procedures for the DRU-1k.

4.2 Test Equipment

Please refer to Table 4-1 for a list of required test equipment. Operating instructions for test equipment are not included in this manual. Only precautionary notes or special test equipment settings required for measurement accuracy are included.

Table 4-1 Test Equipment

Type
PC/Laptop

4.3 Installation Verification

Please check the following before turning on the DRU-1k:

- Verify that no equipment was damaged during the installation.
- Verify that there are no sign of water or debris in the cabinets.
- Verify that the ground conductors have been connected to the repeater LB cabinet and HB cabinet ground studs.
- Verify that the main AC power cables have been connected to the repeater LB cabinet and HB cabinet PDU's correctly.
- Verify that the electronics compartment components (assemblies), which were packaged separately, have been installed correctly.
    - Verify that the components are in the correct locations (in the correct cabinet).
    - Verify that the ground, communications, RF and power wires/cables have been connected correctly.
- Verify that all HPA compartment components (assemblies), which were packaged separately, have been installed correctly.
- Verify that all external input signals have been connected to the correct interfaces.
- Verify that the PTSN phone line cord has been connected to the surge protector correctly (where applicable).
- Verify that any external alarm contacts/sensors have been connected to the external alarm terminal block correctly (where applicable).
- Verify that the broadcast antenna(s) and transmission line(s) have been swept and connected to the correct RF output port.

4.4 Commissioning Procedure

During the commissioning (initial turn-on) procedure, the operator will be required to perform the following tasks:

1. Power-on the repeater
2. Configure the repeater
3. Place the repeater in broadcast mode

4.4.1 Repeater AC/DC Power-on

The repeater is divided into separate LB and HB cabinets. However, there are several components (assemblies) which are shared by both cabinets, but are physically located in only one of the cabinets. In this case, it is recommended that the HB sub-system is turned on before the LB sub-system is turned on.

4.4.1.1 Main Disconnect

The repeater AC/DC power should be turned on in the following sequence:

1. Switch ON the repeater circuit breaker, located in the building/site electrical service panel.
2. Switch ON the AC disconnect device, located on or near the repeater pedestal (where applicable).

4.4.1.2 High Band Sub-system

The HB cabinet AC/DC power should be turned on in the following sequence:

1. Switch ON the MAIN PDU circuit breaker.
2. Switch ON the HE circuit breaker (CB 5), located on the PDU.
   - The air-to-air heat exchanger/heater will not turn on if the DRU is at room temperature. Once the electronics compartment doors are closed, and the compartment temperature increases, the air-to-air heat exchanger/heater fans will turn on.
3. Switch ON the BMS circuit breaker (CB 6), located on the PDU.
   - Ensure that the 12 VDC rectifier LEDs are illuminated green and that the internal fans are rotating continuously.
   - Ensure that the BMS mounting shelf CTR LED is illuminated green.
4. Switch ON the 12 VDC battery circuit breaker (BAT CB), located on the BMS rear panel.
5. Switch ON the HBE rear panel power switch and close the electronics compartment rear door.
6. Switch ON the SERVICE AC circuit breaker (CB 7), located on the PDU.
7. Switch ON the FAN 1 / FAN 2 (CB 9) and the FAN 3 / FAN 4 (CB10) circuit breakers, located on the PDU.
   - Ensure that the HPA compartment fans are rotating continuously (fans can be heard) and that the PDU FAN 1 / FAN 2 and FAN 3 / FAN 4 LEDs are illuminated red to indicate current draw.
8. Switch ON the HBE 10A circuit breaker, located on the BMS front panel.
   - Ensure that the HBE Power LED is illuminated green and that the internal fan is rotating continuously.
9. Switch ON the TSC-H 5A circuit breaker, located on the BMS front panel.
   - Ensure that the LED's on the HB HPA's begin to flash red and green alternately.
10. Switch ON the HPA 1 PSU circuit breaker (CB1), located on the PDU.
    - Ensure that the HPA 1 PSU (PS 1) Norm LED is illuminated green.
    - Ensure that the HPA 1 front panel LED is illuminated blue.
11. Switch ON the HPA 2 PSU circuit breaker (CB2), located on the PDU.
    - Ensure that the HPA 2 PSU (PS 2) Norm LED is illuminated green.
    - Ensure that the HPA 2 front panel LED is illuminated blue.
12. Switch ON the HPA 3 PSU circuit breaker (CB3), located on the PDU.
    - Ensure that the HPA 3 PSU (PS 3) Norm LED is illuminated green.
    - Ensure that the HPA 3 front panel LED is illuminated blue.
13. Switch ON the HPA 4 PSU circuit breaker (CB4), located on the PDU.
    - Ensure that the HPA 4 PSU (PS 4) Norm LED is illuminated green.
    - Ensure that the HPA 4 front panel LED is illuminated blue.

4.4.1.3 Low Band Sub-system

The LB cabinet AC/DC power should be turned on in the following sequence:

1. Switch ON the MAIN PDU circuit breaker.
2. Switch ON the HE circuit breaker (CB 5), located on the PDU.
   - The air-to-air heat exchanger/heater will not turn on if the DRU is at room temperature. Once the electronics compartment doors are closed, and the compartment temperature increases, the air-to-air heat exchanger/heater fans will turn on.
3. Switch ON the LBE rear panel power switch.
4. Switch ON the TRMS rear panel power switch and close the electronics compartment rear door.
5. Switch ON the TRMS circuit breaker (CB 8), located on the PDU front panel.
   - Ensure that the TRMS Power LED is illuminated green.
6. Switch ON the FAN 1 / FAN 2 (CB 9) and the FAN 3 / FAN 4 (CB10) circuit breakers, located on the PDU.
   - Ensure that the HPA compartment fans are rotating continuously (fans can be heard) and that the PDU FAN 1 / FAN 2 and FAN 3 / FAN 4 LEDs are illuminated red to indicate current draw.
7. Switch ON the LBE 25A circuit breaker, located on the BMS front panel.
   - Ensure that the LBE Power LED is illuminated green and that the internal fan is rotating continuously. Note: Fan operation will be halted momentarily during the boot-up process, but will continue to operate continuously.
8. Switch ON the TSC-L 5A circuit breaker, located on the BMS front panel.
   - Ensure that the LED's on the LB HPA's begin to flash red and green alternately.
9. Switch ON the SPARE 2.5A circuit breaker, located on the BMS front panel.
   - Ensure that the BMS alarm LEDs are no longer illuminated red; only the CTR LED should be illuminated green.
10. Switch ON the HPA 1 PSU circuit breaker (CB1), located on the PDU.
    - Ensure that the HPA 1 PSU (PS 1) Norm LED is illuminated green.
    - Ensure that the HPA 1 front panel LED is illuminated blue.
11. Switch ON the HPA 2 PSU circuit breaker (CB2), located on the PDU.
    - Ensure that the HPA 2 PSU (PS 2) Norm LED is illuminated green.
    - Ensure that the HPA 2 front panel LED is illuminated blue.
12. Switch ON the HPA 3 PSU circuit breaker (CB3), located on the PDU.
    - Ensure that the HPA 3 PSU (PS 3) Norm LED is illuminated green.
    - Ensure that the HPA 3 front panel LED is illuminated blue.
13. Switch ON the HPA 4 PSU circuit breaker (CB4), located on the PDU.
    - Ensure that the HPA 4 PSU (PS 4) Norm LED is illuminated green.
    - Ensure that the HPA 4 front panel LED is illuminated blue.

4.4.2 Repeater Configuration

Repeater configuration involves verifying, changing, and/or setting parameter values that allow the repeater to operate from its assigned location. The operator will be required to configure the following:

- Low Band Exciter (LBE)
- High Band Exciter (HBE)
- Terrestrial Repeater Monitoring System (TRMS)

4.4.2.1 Low Band Exciter (LBE) Configuration

Please refer to SiriusXM instructions as well as the LBE Operating Manual to configure the exciter with specific settings for its assigned location.

4.4.2.2 High Band Exciter (HBE) Configuration

Please refer to SiriusXM instructions as well as the HBE Operating Manual to configure the exciter with specific settings for its assigned location.

4.4.2.3 Terrestrial Repeater Monitoring System (TRMS) Configuration

Please refer to SiriusXM instructions as well as the TRMS Operating Manual to configure the TRMS with specific settings for its assigned location.

4.4.3 Placing a Combined DRU in Broadcast Mode

As the repeater is divided into LB and HB sub-systems, each sub-system must be placed in broadcast mode, independent of the other. It is recommended that the LB sub-system is placed in broadcast mode before the HB sub-system is placed in broadcast mode.

4.4.3.1 Low Band Sub-system

Once the LBE is powered up and all LBE alarms have cleared, the operator can place the LB sub-system in broadcast mode using the LBE GUI as follows:

1. Set SysPowerSetp to the site specific power level (max. 60.0 dBm) – see Figure 4-1, config window line 3. SysPowerSetp is used to set the power level for the LB Main RF signal.
2. Set SysLbdPowerSetp to the site specific power level (typical value is 27 dB below SysPowerSetp) – see Figure 4-1, config window line 6. SysLbdPowerSetp is used to set the power level for the LB Diversity RF signal, which is normally 27 dB below the LB Main RF signal.
3. Ensure that SysOfnLoss is set to 0.0 dBm – see Figure 4-1, config window line 4.

4. Set SysOperatingMode to transmit_only – see Figure 4-1, config window line 1. SysOperatingMode is used to set the LB sub-system operating mode.
   - The LED's on the LB HPA's will flash green and blue alternately as the HPA's ramp up to the SysPowerSetp target.
   - Once the SysPowerSetp target is reached, the HPA LED's will be illuminated green. It should take less than TBD minutes for the LB sub-system to ramp up to full power.
5. Ensure that the SysPowerSetp target is reached by viewing the Cpl1ForwardPwr – see Figure 4-1, status window line 13.
6. Ensure that the TRMS LB Status LED is illuminated green.
   - The TRMS should scan through the channels at a slow rate of approximately 20 seconds per channel.

Figure 4-1 LBE GUI sys Page

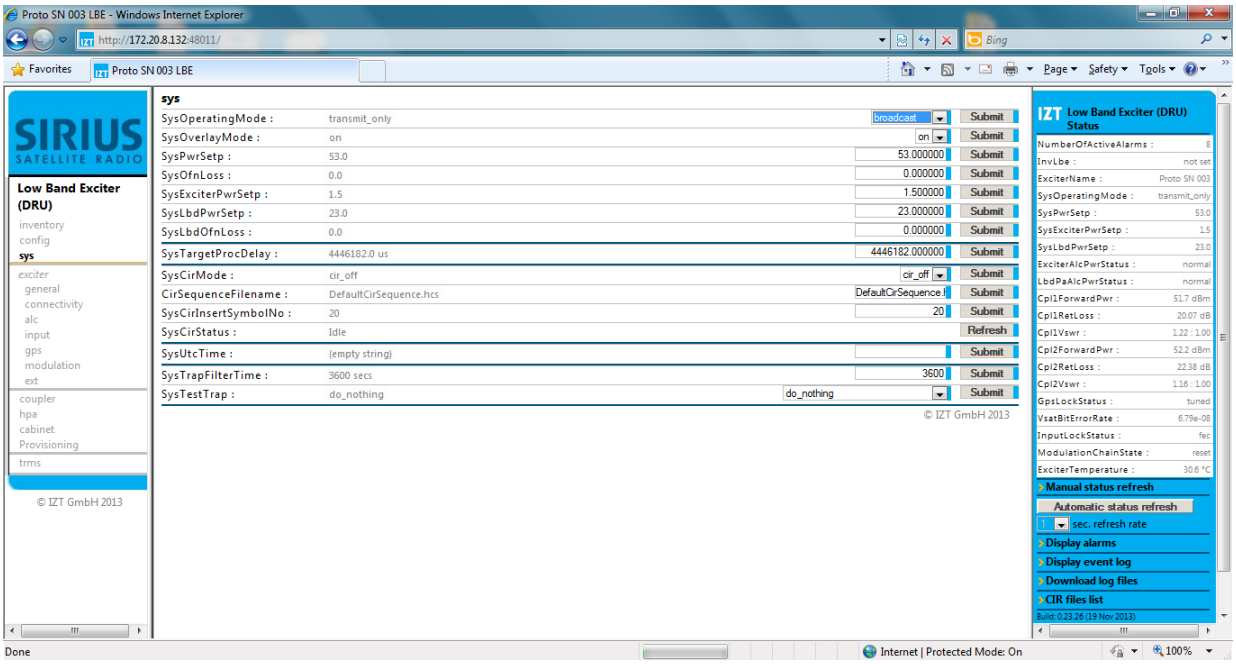

4.4.3.2 High Band Sub-system

Once the HBE is powered up and all alarms have cleared, the operator can place the HB repeater in broadcast mode as follows:

1. Set SysPowerSetp to the site specific power level (max. 60.0 dBm) – see Figure 4-2, config window line 4. SysPowerSetp is used to set the power level for the HB RF signal.
2. Ensure that SysOfnLoss is set to 0.0 dBm – see Figure 4-2, config window line 5.
3. Set SysOperatingMode to broadcast – see Figure 4-2, config window line 1. SysOperatingMode is used to set the HB sub-system operating mode.
   - Ensure that the LNA LED is illuminated green.

- The LED's on the HB HPA's will flash green and blue alternately as the HPA's ramp up to the SysPowerSetp target.
- Once the SysPowerSetp target is reached, the HPA LED's will be illuminated green. It should take less than 2 minutes for the HB sub-system to ramp up to full power.

4. Ensure that the SysPowerSetp target is reached by viewing the Cpl1ForwardPwr – see Figure 4-1, status window line 10.
   - Note: The HBE GUI does not provide any coupler measurements. The combined (coupler 1) coupler measurements are provided by the LBE GUI.
5. Ensure that the TRMS HB Status LED is illuminated green.
   - The TRMS should scan through the channels at a fast rate of approximately 2 seconds per channel.

Figure 4-2 HBE GUI sys Page

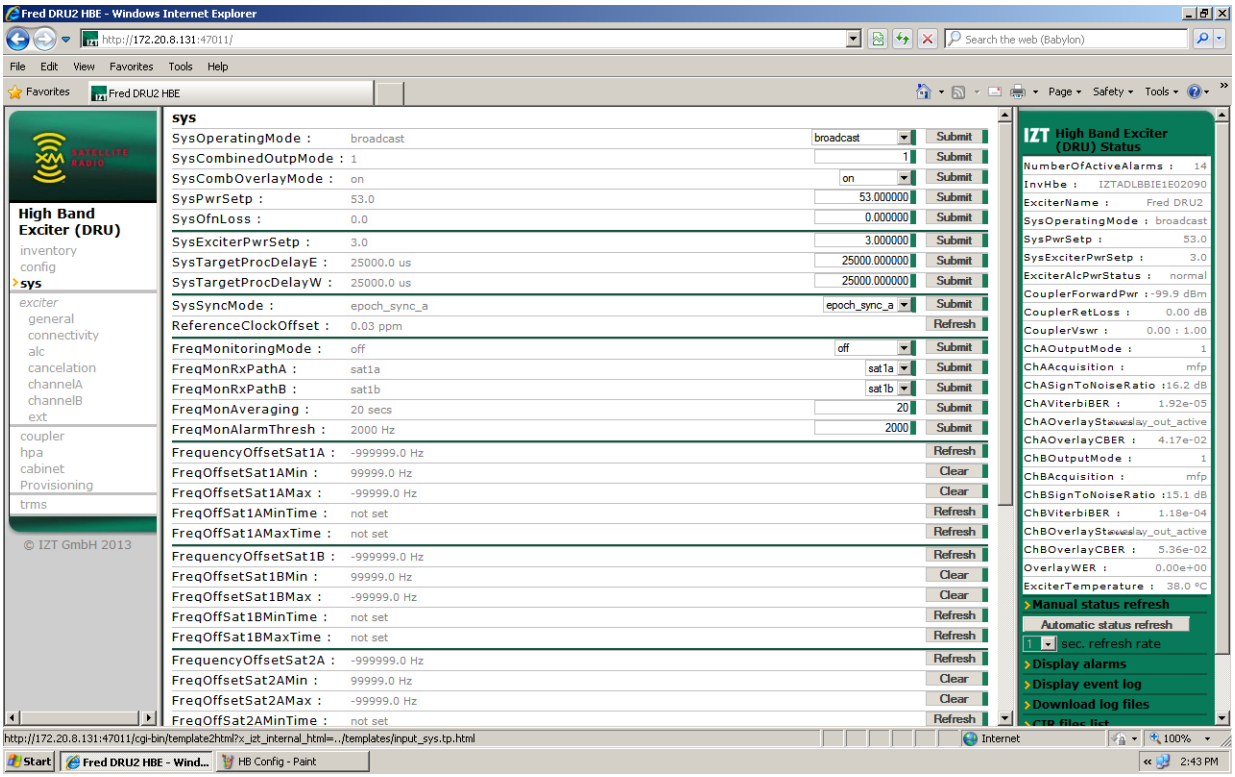

4.4.4 Placing an Independent DRU in Broadcast Mode

As the repeater is divided into LB and HB sub-systems, each sub-system must be placed in broadcast mode, independent of the other. It is recommended that the LB sub-system is placed in broadcast mode before the HB sub-system is placed in broadcast mode.

4.4.4.1 Low Band Sub-system

Once the LBE is powered up and all LBE alarms have cleared, the operator can place the LB sub-system in broadcast mode using the LBE GUI as follows:

1. Set SysPowerSetp to the site specific power level (max. 60.0 dBm) – see Figure 4-3, config window line 3. SysPowerSetp is used to set the power level for the LB Main RF signal.
2. Set SysLbdPowerSetp to the site specific power level (typical value is 27 dB below SysPowerSetp) – see Figure 4-3, config window line 6. SysLbdPowerSetp is used to set the power level for the LB Diversity RF signal, which is normally 27 dB below the LB Main RF signal.
3. Ensure that SysOfnLoss is set to 0.0 dBm – see Figure 4-3, config window line 4.
4. Set SysOperatingMode to transmit_only – see Figure 4-3, config window line 1. SysOperatingMode is used to set the LB sub-system operating mode.
   - The LED's on the LB HPA's will flash green and blue alternately as the HPA's ramp up to the SysPowerSetp target.
   - Once the SysPowerSetp target is reached, the HPA LED's will be illuminated green. It should take less than TBD minutes for the LB sub-system to ramp up to full power.
5. Ensure that the SysPowerSetp target is reached by viewing the Cpl2ForwardPwr – see Figure 4-3, status window line 13.
6. Ensure that the TRMS LB Status LED is illuminated green.
   - The TRMS should scan through the channels at a slow rate of approximately 20 seconds per channel.

Figure 4-3 LBE GUI sys Page

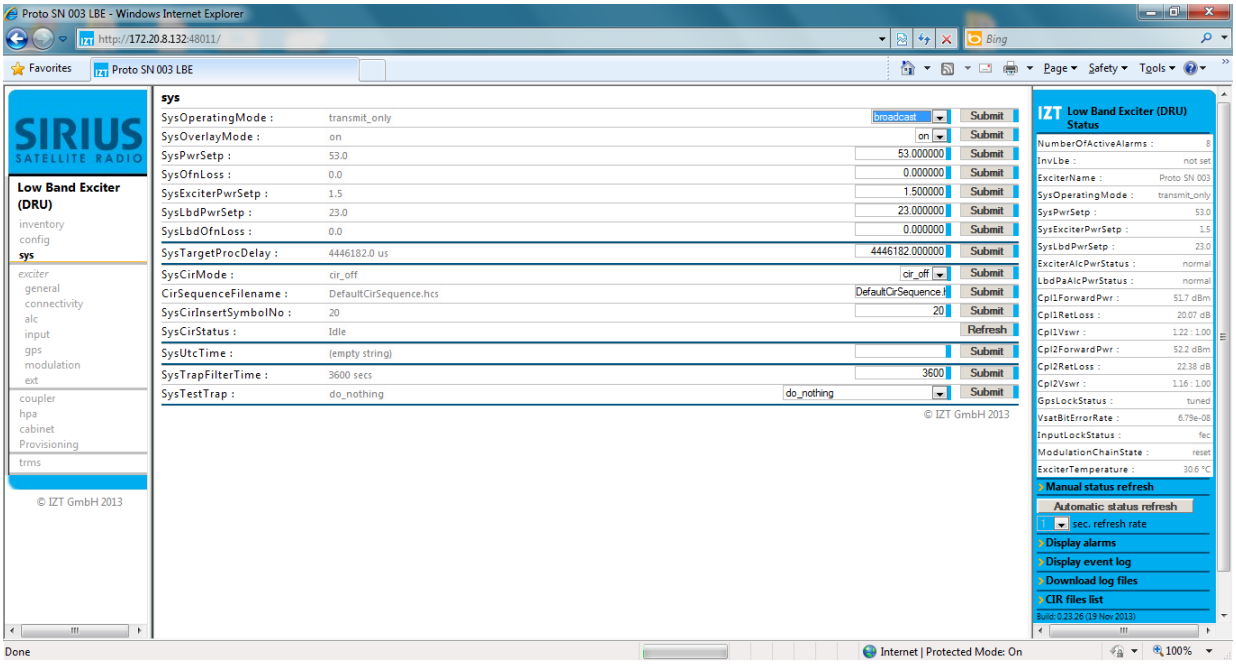

4.4.4.2 High Band Sub-system

Once the HBE is powered up and all alarms have cleared, the operator can place the HB repeater in broadcast mode as follows:

1. Set SysPowerSetp to the site specific power level (max. 53.0 dBm) – see Figure 4-4, config window line 4. SysPowerSetp is used to set the power level for the HB RF signal.
2. Ensure that SysOfnLoss is set to 0.0 dBm – see Figure 4-4, config window line 5.
3. Set SysOperatingMode to broadcast – see Figure 4-4, config window line 1. SysOperatingMode is used to set the HB sub-system operating mode.
   - Ensure that the LNA LED is illuminated green.
   - The LED's on the HB HPA's will flash green and blue alternately as the HPA's ramp up to the SysPowerSetp target.
   - Once the SysPowerSetp target is reached, the HPA LED's will be illuminated green. It should take less than 2 minutes for the HB sub-system to ramp up to full power.
4. Ensure that the SysPowerSetp target is reached by viewing the Cpl1ForwardPwr – see Figure 4-3, status window line 10.
   - Note: The HBE GUI does not provide any coupler measurements. The combined (coupler 1) and independent (coupler 2) coupler measurements are provided by the LBE GUI.
5. Ensure that the TRMS HB Status LED is illuminated green.
   - The TRMS should scan through the channels at a fast rate of approximately 2 seconds per channel.

Figure 4-4 HBE GUI sys Page

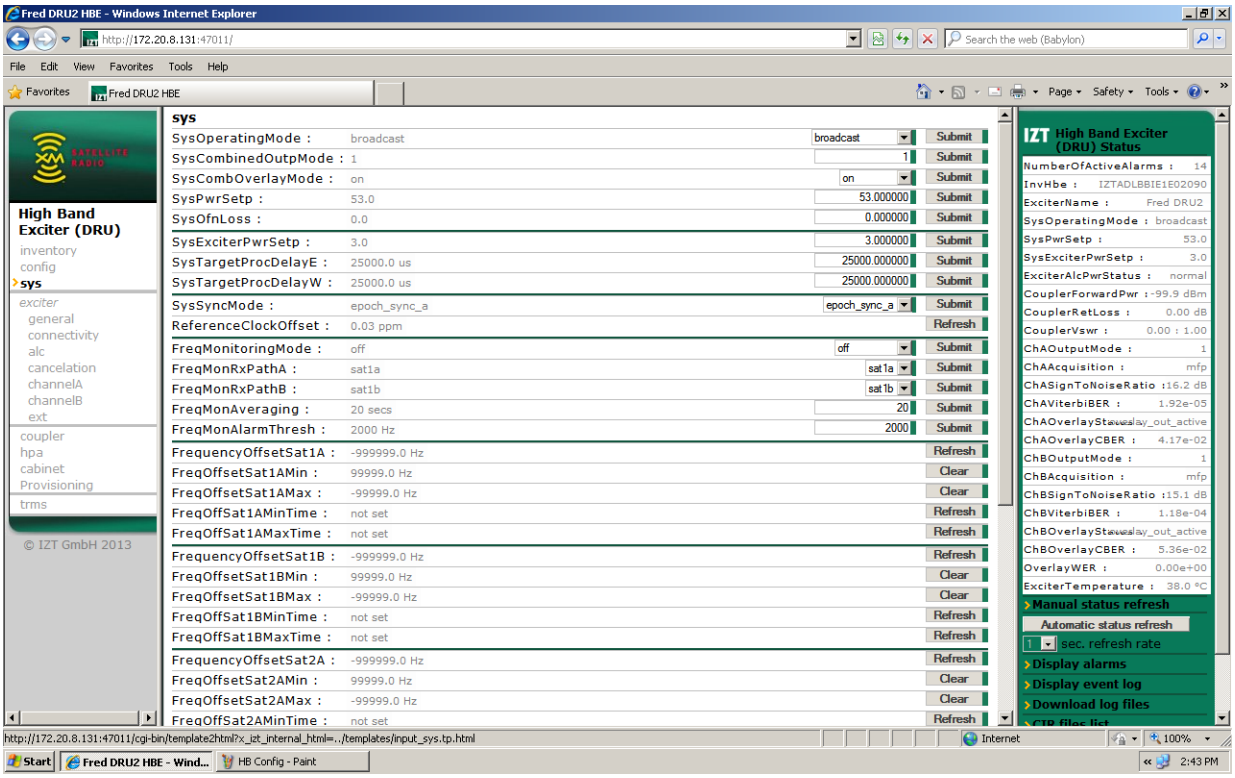

Unique Broadband Systems Ltd.

Chapter 5

Operation

Contents

5 Operation 5-1
5.1 Introduction 5-1
5.2 Control and Communication 5-1
5.2.1 Control and Communication Interfaces 5-1
5.2.2 User Interfaces 5-1
5.3 Modes of Operation 5-1
5.3.1 High Band Sub-system 5-1
5.3.2 Low Band Sub-system 5-1
5.3.3 Terrestrial Repeater Monitoring System (TRMS) 5-2
5.4 Indicators and Controls 5-2
5.4.1 High Band Exciter (HBE) 5-2
5.4.2 Low Band Exciter (LBE) 5-2
5.4.3 Terrestrial Repeater Monitoring System (TRMS) 5-2
5.4.4 Dial-up Modem 5-2
5.4.5 Power Distribution Unit (PDU) 5-3
5.4.6 High Band Cabinet PDU 5-4
5.4.7 Low Band Cabinet PDU 5-5
5.4.8 Battery Management System (BMS) 5-6
5.4.9 High Band Low Noise Amplifier (LNA) 5-7
5.4.10 High Power Amplifier Power Supply Unit (HPA PSU) 5-8
5.4.11 High Power Amplifier (HPA) 5-9

This page has intentionally been left blank.

5 Operation

5.1 Introduction

This section addresses the control and operation of the DRU-1k and provides descriptions of indicators and controls.

5.2 Control and Communication

The DRU-1k can be controlled locally (on-site) or remotely from a Network Management System (NMS).

5.2.1 Control and Communication Interfaces

There is one (1) “cabinet” interface port provided for control and communication:

- TEL (Screw Terminal) – used for remote control of the HBE, LBE and TRMS via dial-up modem and LBE.

The HBE and LBE also include a front panel RJ-45 Ethernet port for local control of the corresponding exciter.

Please refer to the corresponding Operating Manual for detailed information on configuring the HBE, LBE and TRMS interface ports for local or remote control.

5.2.2 User Interfaces

The HBE, LBE and TRMS include their own user interface(s), permitting an operator to control the device locally or remotely. Please refer to the corresponding Operating Manual for detailed information on the HBE, LBE and TRMS user interfaces.

5.3 Modes of Operation

5.3.1 High Band Sub-system

Please refer to the HBE Operating Manual for detailed information on the HB sub-system operating modes.

5.3.2 Low Band Sub-system

Please refer to the LBE Operating Manual for detailed information on the LB sub-system operating modes.

5.3.3 Terrestrial Repeater Monitoring System (TRMS)

Please refer to the TRMS Operating Manual for detailed information on the TRMS operating modes.

5.4 Indicators and Controls

The DRU-1k main components (assemblies) have individual indicators and controls used in normal operation.

5.4.1 High Band Exciter (HBE)

Please refer to the HBE Operating Manual for detailed information on the HBE indicators and controls.

5.4.2 Low Band Exciter (LBE)

Please refer to the LBE Operating Manual for detailed information on the LBE indicators and controls.

5.4.3 Terrestrial Repeater Monitoring System (TRMS)

Please refer to the TRMS Operating Manual for detailed information on the TRMS indicators and controls.

5.4.4 Dial-up Modem

Please refer to the Dial-up Modem Operating Manual for detailed information on the Dial-up Modem indicators and controls.

5.4.5 Power Distribution Unit (PDU)

The HB and LB cabinets each have their own unique PDU.

Each PDU front panel includes an identical set of four (4) LEDs to indicate that the cabinet fans are operational. The PDU front panel also includes up to ten (10) circuit breakers to turn on/off the cabinet AC power.

1) Fan Status LED Indicators

Table 5-1 PDU Fan Status LED Indicator

LED	Color	Description
1	Red	Fan 1 powered on.
	OFF	Fan 1 powered off.
2	Red	Fan 2 powered on.
	OFF	Fan 2 powered off.
3	Red	Fan 3 powered on.
	OFF	Fan 3 powered off.
4	Red	Fan 4 powered on.
	OFF	Fan 4 powered off.

5.4.6 High Band Cabinet PDU

Figure 5-1 HB Cabinet PDU

Table 5-2 HB Cabinet PDU Circuit Breakers

Name	Rating	Circuit Breaker For
MAIN L1/L2	80A, 2-pole	AC input from building/site electrical service panel or AC disconnect device
CB 1	15A, 120/240V, 2-pole	HPA PS 1
CB 2	15A, 120/240V, 2-pole	HPA PS 2
CB 3	15A, 120/240V, 2-pole	HPA PS 3
CB 4	15A, 120/240V, 2-pole	HPA PS 4
CB 5	5A, 120/240V, 2-pole	Air-to-Air heat exchanger/heater
CB 6	10A, 120/240V, 2-pole	BMS
CB 7	5A, 240V, 2-pole	Provides 120 VAC to GFI outlet
CB 9	10A, 120V, Single-pole	Fan box 1: fan 1 and fan 2
CB 10	10A, 120V, Single-pole	Fan box 2: fan 3 and fan 4

5.4.7 Low Band Cabinet PDU

Figure 5-2 LB Cabinet PDU

Table 5-3 LB Cabinet PDU Circuit Breakers

Name	Rating	Circuit Breaker For
MAIN L1/L2	80A, 2-pole	AC input from building/site electrical service panel or AC disconnect device
CB 1	15A, 120/240V, 2-pole	HPA PS 1
CB 2	15A, 120/240V, 2-pole	HPA PS 2
CB 3	15A, 120/240V, 2-pole	HPA PS 3
CB 4	15A, 120/240V, 2-pole	HPA PS 4
CB 5	5A, 120/240V, 2-pole	Air-to-Air heat exchanger/heater
CB 8	5A, 120V, Single-pole	TRMS
CB 9	10A, 120V, Single-pole	Fan box 1: fan 1 and fan 2
CB 10	10A, 120V, Single-pole	Fan box 2: fan 3 and fan 4

5.4.8 Battery Management System (BMS)

The BMS rectifier front panel includes an LED to indicate that the rectifier has been power on. The BMS mounting shelf front panel controller includes seven (7) status LEDs to indicate BMS operation and alarm conditions. The BMS mounting shelf front panel also includes five (5) circuit breakers to turn on/off the BMS 12 VDC output.

Figure 5-3 BMS

1) Rectifier Power LED Indicator
2) BMS Controller Status LED Indicators

Table 5-4 Rectifier LED Indicator

LED	Color	Description
	Green	Rectifier is powered on.
	OFF	Rectifier is powered off.

Table 5-5 BMS Controller Status LED Indicators

LED	Color	Description
CTR	Green	BMS is powered on and is operating under normal, no fault conditions.
	OFF	BMS is powered off.
MAJA	Red	“Major” (immediate response) alarm is present.
	OFF	Normal, no fault operation (when CTR LED is Green).
MINA	Red	“Minor” (scheduled response) alarm is present.
	OFF	Normal, no fault operation (when CTR LED is Green).
ACFA	Red	AC supply failure.
	OFF	Normal, no fault operation (when CTR LED is Green).
OTA	Red	One or more of the monitored temperatures is too high.
	OFF	Normal, no fault operation (when CTR LED is Green).
RFA	Red	Rectifier failure.
	OFF	Normal, no fault operation (when CTR LED is Green).
OVA	Red	System BUS Voltage is too high.
	OFF	Normal, no fault operation (when CTR LED is Green).

Table 5-6 BMS Circuit Breakers

Name	Rating	Circuit Breaker For
BAT CB	100A	Battery (rear panel)
SPARE	2.5A	Spare
TSC-H	5A	HB TSC
TSC-L	5A	LB TSC
HBE	10A	HBE
LBE	25A	LBE

5.4.9 High Band Low Noise Amplifier (LNA)

The LNA includes an LED, which is visible through the top cover, to indicate that the LNA has been powered on.

Figure 5-4 LNA

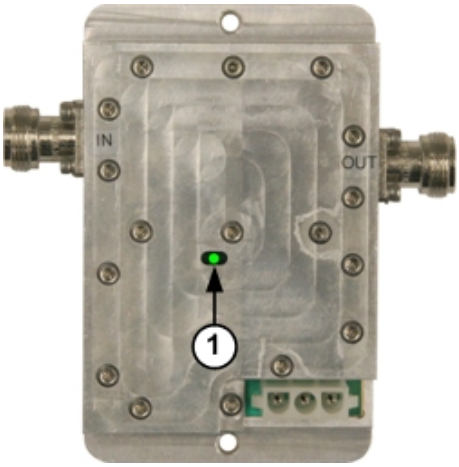

1) LNA Power LED Indicator

Table 5-7 LNA Power LED Indicator

LED	Color	Description
	Green	LNA is powered on.
	OFF	LNA is powered off.

5.4.10 High Power Amplifier Power Supply Unit (HPA PSU)

The HPA PSU rectifier front panel includes three (3) status LEDs to indicate rectifier operation and alarm conditions.

Figure 5-5 HPA PSU Rectifier

1) HPA PSU Rectifier Status LED Indicators

Table 5-8 HPA PSU Rectifier Status LED Indicators

LED	Color	Description
Norm	Green	Rectifier is powered on and is operating under normal conditions. Note: Comm Fault is possible.
	Green Blink	Rectifier output is inhibited, preparing to deliver power, ramping up or in standby.
	Amber	Rectifier output is limited to less than fully rated output power.
	OFF	Rectifier is powered off. ACF or Fail alarm is active.
ACF	Amber	AC input is out of range and the rectifier output is powered off.
	OFF	Normal, no fault operation (when Norm LED is Green).
Fail	Red	Rectifier failure or shutdown.
	Red Blink	Communication failure with controller.
	Red Wink	Fan failure.
	OFF	Normal, no fault operation (when Norm LED is Green).

- Blink Timing shall be approximately 0.5 seconds ON and 0.5 seconds OFF.
- Wink Timing shall be approximately 0.2 seconds ON and 2 seconds OFF.

5.4.11 High Power Amplifier (HPA)

The HPA front panel includes one (1) status LED to indicate HPA operation and alarm conditions.

Figure 5-6 HPA

1) HPA Status LED Indicator

Table 5-9 HPA Status LED Indicator

LED	Color	Description
	Green	HPA is in broadcast mode and the output target has been reached.
	Green/Blue Blink	HPA is in broadcast mode and is ramping up to full power.
	Blue	HPA is in standby mode with the 30 VDC source enabled.
	Green/Red Blink	HPA is in standby mode with the 30 VDC source disabled.
	Red	HPA is in broadcast mode and alarm is present.
	OFF	HPA controller is powered off.

Unique Broadband Systems Ltd.

Chapter 6

Maintenance

Contents

6 Maintenance 6-1

6.1 Introduction 6-1

6.2 Test Equipment 6-1

6.3 Required Tools 6-1

6.4 Preventative Maintenance 6-2

6.5 Replacement Procedures 6-2

6.5.1 Combined DRU Shutdown 6-4
6.5.1.1 Full System Shutdown 6-4
6.5.1.2 Low Band Sub-system Shutdown 6-6
6.5.1.3 High Band Sub-system Shutdown 6-7
6.5.2 Independent DRU-200 Shutdown 6-8
6.5.2.1 Full System Shutdown 6-8
6.5.2.2 Low Band Sub-system Shutdown 6-10
6.5.2.3 High Band Sub-system Shutdown 6-11
6.5.3 High Band Exciter (HBE) Replacement 6-12
6.5.3.1 HBE Removal 6-12
6.5.3.2 HBE Installation 6-13
6.5.4 Low Band Exciter (LBE) Replacement 6-15
6.5.4.1 LBE Removal 6-15
6.5.4.2 LBE Installation 6-16
6.5.5 Terrestrial Repeater Monitoring System (TRMS) Replacement 6-19
6.5.5.1 TRMS Removal 6-19
6.5.5.2 TRMS Installation 6-20
6.5.6 Air-to-Air Heat Exchanger/Heater Replacement 6-21
6.5.6.1 Air-to-Air Heat Exchanger/Heater Removal 6-21
6.5.6.2 Air-to-Air Heat Exchanger/Heater Installation 6-25
6.5.7 HPA Power Supply Unit 30 VDC Rectifier Module Replacement 6-26
6.5.7.1 HPA PS (30 VDC Rectifier Module) Removal 6-27
6.5.7.2 High Band Cabinet HPA PS (30 VDC Rectifier Module) Installation 6-28
6.5.8 HPA PSU Mounting Shelf Replacement 6-29
6.5.8.1 HPA PSU Mounting Shelf Removal 6-29
6.5.8.2 HPA PSU Mounting Shelf Installation 6-31
6.5.9 HPA Replacement 6-32
6.5.9.1 HPA Removal 6-36
6.5.9.2 HPA Installation 6-36
6.5.10 Air Intake Filter Replacement 6-37
6.5.10.1 Air Intake Filter Removal 6-37
6.5.10.2 Air Intake Filter Installation 6-37
6.5.11 Fan Box Replacement 6-38
6.5.11.1 Fan Box Removal 6-38
6.5.11.2 Fan Box Installation 6-40

This page has intentionally been left blank.

6 Maintenance

6.1 Introduction

This section describes the procedures for removal and replacement of the DRU-1k components/sub-assemblies.

6.2 Test Equipment

The only test equipment required to perform the replacement procedures in the manual is a PC/laptop. Operating instructions for test equipment are not included in this manual.

6.3 Required Tools

The following tools may be needed to perform maintenance on the repeater:

Table 6-1 Required Tools

Tool	Type	Size
Screwdriver	Phillips	#3
Screwdriver	Phillips	#2
Screwdriver	Phillips	#0
Screwdriver	Slotted	1/4”
Screwdriver	Slotted	3/16”
Screwdriver	Slotted	1/8”
Screwdriver	Slotted	3/32”
Hex Driver		3/16”
Hex Driver		5/32”
Hex Driver		9/64”
Security Hex Driver		3/16”
Open End Wrench		7/16”
Open End Wrench		11/32”
Open End Wrench		5/16”
Torque Wrench		5/16”
Socket		7/16”
Cable Tie	PLT.7M-M	18lb, 3.1" x 0.090"
Cable Tie Mount	ABM1M-A-C	
Step Ladder		

6.4 Preventative Maintenance

The only required preventative maintenance is for the HPA compartment air intake filters and the air-to-air heat exchanger/heater exterior coils.

As a general rule, it is recommended that the air filters and exterior coils be cleaned every 6 months under normal conditions, or every 3 months in dusty environments. UBS would recommend that the filters and exterior coils be inspected more frequently and cleaning intervals be adjusted as deemed necessary by the operator.

6.5 Replacement Procedures

The following repeater components can be replaced:

Table 6-2 Replaceable Components

Electronics Compartment	**Part Number**
PDU Circuit Breaker	N/A
PDU Current Sensor	N/A
BMS Mounting Shelf w/Controller	SX03-50310-01
BMS 12 VDC Rectifier Module	SX03-50320-01
BMS 12 VDC Battery	SX03-50330-01
Dual Band Pass Filter (DBPF)	SX03-50100-01
Low Noise Amplifier (LNA)	SX03-50200-01
TSC	SX03-50700-01
LBD DR Filter	SX03-51100-01
HBE	N/A
LBE	N/A
TRMS	N/A
Air-to-Air Heat Exchanger/Heater	SX03-50400-01
HPA Compartment	**Part Number**
High Power Amplifier (HPA)	SX03-40000-01
HPA PSU Mounting Shelf	SX03-51710-01
HPA PSU 30 VDC Rectifier Module	SX03-51720-01
4-Way Hybrid Combiner	SX03-21806-01
1000W Termination	000087206R
500W Termination	000051005
500W Termination #1 Heat Sink	SX03-21781-01
500W Termination #2 Heat Sink	SX03-21782-01

HPA Compartment	Part Number
4-way Splitter	000087234R
WG WR340 Coupler/RF Detector	SX03-51600-01
Fan (Blower) Box	SX03-50500-01
Air Intake Filter	SX03-10199-01
Output Filter Network (OFN) Cabinet	**Part Number**
Output Filter Assembly, Combined DRU	SX03-24100-02
Output Filter Assembly, Independent DRU	SX03-24100-03
WR340 Transmission Output Coupler/RF Detector	SX03-51600-01

6.5.1 Combined DRU Shutdown

6.5.1.1 Full System Shutdown

A Combined DRU should be shut down in the following sequence:

1. Using the HBE GUI, set SysOperatingMode to standby.
   - The LBE GUI Cpl1ForwardPwr reading will decrease by 3 dBm (assuming both HB and LB sub-systems are operating with equal output power levels).
   - The HB HPA LED will be illuminated blue.
   - The LNA LED will be extinguished.
   - The TRMS HB Status LED will be extinguished.
2. Using the LBE GUI, set SysOperatingMode to standby.
   - The LBE GUI Cpl1ForwardPwr reading will be 0 dBm.
   - The LB HPA LED will be illuminated blue.
   - The TRMS LB Status LED will be extinguished.
3. Switch OFF the HB HPA PSU circuit breakers (CB1, CB2, CB3 and CB4), located on the HB cabinet PDU.
   - The Norm LED's on the HB HPA PSU's (PS 1, PS2, PS3 and PS4) will be extinguished.
   - The front panel LED's on the HB HPA's (HPA 1, HPA 2, HPA 3 and HPA 4) will flash green and red alternately.
4. Switch OFF the LB HPA PSU circuit breaker (CB1, CB2, CB3 and CB4), located on the LB cabinet PDU.
   - The Norm LED's on the LB HPA PSU's (PS 1, PS2, PS3 and PS4) will be extinguished.
   - The front panel LED's on the LB HPA's (HPA 1, HPA 2, HPA 3 and HPA 4) will flash green and red alternately.
5. Switch OFF the SPARE 2.5A circuit breaker, located on the BMS front panel.
   - The BMS alarm LEDs will be illuminated red.
6. Switch OFF the TSC-H 5A circuit breaker, located on the BMS front panel.
   - The LED's on the HB HPA's will be extinguished.
7. Switch OFF the TSC-L 5A circuit breaker, located on the BMS front panel.
   - The LED's on the LB HPA's will be extinguished.
8. Switch OFF the HBE 10A circuit breaker, located on the BMS front panel.
   - The HBE Power LED will be extinguished and the internal fan will turn off.
9. Switch OFF the LBE 25A circuit breaker, located on the BMS front panel.
   - The LBE Power LED will be extinguished and the internal fan will turn off.
10. Switch OFF FAN 1 / FAN 2 (CB 9) and the FAN 3 / FAN 4 (CB10) circuit breakers, located on the HB cabinet PDU.
    - The HPA compartment fans will turn off (fans cannot be heard) and that the PDU FAN 1 and 2 LEDs will be extinguished.

11. Switch OFF FAN 1 / FAN 2 (CB 9) and the FAN 3 / FAN 4 (CB10) circuit breakers, located on the LB cabinet PDU.
    - The HPA compartment fans will turn off (fans cannot be heard) and that the PDU FAN 1 and 2 LEDs will be extinguished.
12. Switch OFF the TRMS circuit breaker (CB 8), located on the PDU front panel.
    - The TRMS Power LED will be extinguished.
13. Switch OFF the SERVICE AC circuit breaker (CB 7), located on the HB cabinet PDU.
14. Switch OFF the 12 VDC battery circuit breaker (BAT CB), located on the BMS rear panel.
15. Switch OFF the BMS circuit breaker (CB 6), located on the PDU.
    - The 12 VDC rectifier LEDs will be extinguished.
    - The BMS mounting shelf LEDs will be extinguished.
16. Switch OFF the HE circuit breaker (CB 5), located on the HB cabinet PDU.
17. Switch OFF the HE circuit breaker (CB 5), located on the LB cabinet PDU.
18. Switch OFF the MAIN circuit breaker located on the HB cabinet PDU.
19. Switch OFF the MAIN circuit breaker located on the LB cabinet PDU.
20. Switch OFF the AC disconnect devices, located on or near the repeater pedestal (where applicable).
21. Switch OFF the repeater cabinet's circuit breakers, located in the building/site electrical service panel.

6.5.1.2 Low Band Sub-system Shutdown

The Combined DRU LB sub-system should be shut down in the following sequence:

1. Using the LBE GUI, set SysOperatingMode to standby.
   - The LBE GUI Cpl1ForwardPwr reading should decrease by 3 dB.
   - The LB HPA LED will be illuminated blue.
   - The TRMS LB Status LED will be extinguished.
2. Switch OFF the LB HPA PSU circuit breaker (CB1, CB2, CB3 and CB4), located on the LB cabinet PDU.
   - The Norm LED's on the LB HPA PSU's (PS 1, PS2, PS3 and PS4) will be extinguished.
   - The front panel LED's on the LB HPA's (HPA 1, HPA 2, HPA 3 and HPA 4) will flash green and red alternately.
3. Switch OFF the TSC-L 5A circuit breaker, located on the BMS front panel.
   - The LED's on the LB HPA's will be extinguished.
4. Switch OFF the LBE 25A circuit breaker, located on the BMS front panel.
   - The LBE Power LED will be extinguished and the internal fan will turn off.
5. Switch OFF FAN 1 / FAN 2 (CB 9) and the FAN 3 / FAN 4 (CB10) circuit breakers, located on the LB cabinet PDU.
   - The HPA compartment fans will turn off (fans cannot be heard) and that the PDU FAN 1 and 2 LEDs will be extinguished.

6.5.1.3 High Band Sub-system Shutdown

The Combined DRU HB sub-system should be shut down in the following sequence:

1. Using the HBE GUI, set SysOperatingMode to standby.
   - The LBE GUI Cpl1ForwardPwr reading should decrease by 3 dB.
   - The HB HPA LED will be illuminated blue.
   - The LNA LED will be extinguished.
   - The TRMS HB Status LED will be extinguished.
2. Switch OFF the HB HPA PSU circuit breakers (CB1, CB2, CB3 and CB4), located on the HB cabinet PDU.
   - The Norm LED's on the HB HPA PSU's (PS 1, PS2, PS3 and PS4) will be extinguished.
   - The front panel LED's on the HB HPA's (HPA 1, HPA 2, HPA 3 and HPA 4) will flash green and red alternately.
3. Switch OFF the TSC-H 5A circuit breaker, located on the BMS front panel.
   - The LED's on the HB HPA's will be extinguished.
4. Switch OFF the HBE 10A circuit breaker, located on the BMS front panel.
   - The HBE Power LED will be extinguished and the internal fan will turn off.
5. Switch OFF FAN 1 / FAN 2 (CB 9) and the FAN 3 / FAN 4 (CB10) circuit breakers, located on the HB cabinet PDU.
   - The HPA compartment fans will turn off (fans cannot be heard) and that the PDU FAN 1 and 2 LEDs will be extinguished.

6.5.2 Independent DRU-200 Shutdown

6.5.2.1 Full System Shutdown

The Independent DRU should be shut down in the following sequence:

1. Using the HBE GUI, set SysOperatingMode to standby.
   - The LBE GUI Cpl1ForwardPwr reading will be 0 dBm.
   - The HB HPA LED will be illuminated blue.
   - The LNA LED will be extinguished.
   - The TRMS HB Status LED will be extinguished.
2. Using the LBE GUI, set SysOperatingMode to standby.
   - The LBE GUI Cpl2ForwardPwr reading will be 0 dBm.
   - The LB HPA LED will be illuminated blue.
   - The TRMS LB Status LED will be extinguished.
3. Switch OFF the HB HPA PSU circuit breakers (CB1, CB2, CB3 and CB4), located on the HB cabinet PDU.
   - The Norm LED's on the HB HPA PSU's (PS 1, PS2, PS3 and PS4) will be extinguished.
   - The front panel LED's on the HB HPA's (HPA 1, HPA 2, HPA 3 and HPA 4) will flash green and red alternately.
4. Switch OFF the LB HPA PSU circuit breaker (CB1, CB2, CB3 and CB4), located on the LB cabinet PDU.
   - The Norm LED's on the LB HPA PSU's (PS 1, PS2, PS3 and PS4) will be extinguished.
   - The front panel LED's on the LB HPA's (HPA 1, HPA 2, HPA 3 and HPA 4) will flash green and red alternately.
5. Switch OFF the SPARE 2.5A circuit breaker, located on the BMS front panel.
   - The BMS alarm LEDs will be illuminated red.
6. Switch OFF the TSC-H 5A circuit breaker, located on the BMS front panel.
   - The LED's on the HB HPA's will be extinguished.
7. Switch OFF the TSC-L 5A circuit breaker, located on the BMS front panel.
   - The LED's on the LB HPA's will be extinguished.
8. Switch OFF the HBE 10A circuit breaker, located on the BMS front panel.
   - The HBE Power LED will be extinguished and the internal fan will turn off.
9. Switch OFF the LBE 25A circuit breaker, located on the BMS front panel.
   - The LBE Power LED will be extinguished and the internal fan will turn off.
10. Switch OFF FAN 1 / FAN 2 (CB 9) and the FAN 3 / FAN 4 (CB10) circuit breakers, located on the HB cabinet PDU.
    - The HPA compartment fans will turn off (fans cannot be heard) and that the PDU FAN 1 and 2 LEDs will be extinguished.

11. Switch OFF FAN 1 / FAN 2 (CB 9) and the FAN 3 / FAN 4 (CB10) circuit breakers, located on the LB cabinet PDU.
    - The HPA compartment fans will turn off (fans cannot be heard) and that the PDU FAN 1 and 2 LEDs will be extinguished.
12. Switch OFF the TRMS circuit breaker (CB 8), located on the PDU front panel.
    - The TRMS Power LED will be extinguished.
13. Switch OFF the SERVICE AC circuit breaker (CB 7), located on the HB cabinet PDU.
14. Switch OFF the 12 VDC battery circuit breaker (BAT CB), located on the BMS rear panel.
15. Switch OFF the BMS circuit breaker (CB 6), located on the PDU.
    - The 12 VDC rectifier LEDs will be extinguished.
    - The BMS mounting shelf LEDs will be extinguished.
16. Switch OFF the HE circuit breaker (CB 5), located on the HB cabinet PDU.
17. Switch OFF the HE circuit breaker (CB 5), located on the LB cabinet PDU.
18. Switch OFF the MAIN circuit breaker located on the HB cabinet PDU.
19. Switch OFF the MAIN circuit breaker located on the LB cabinet PDU.
20. Switch OFF the AC disconnect devices, located on or near the repeater pedestal (where applicable).
21. Switch OFF the repeater cabinet's circuit breakers, located in the building/site electrical service panel.

6.5.2.2 Low Band Sub-system Shutdown

The Independent DRU LB sub-system should be shut down in the following sequence:

1. Using the LBE GUI, set SysOperatingMode to standby.
   - The LBE GUI Cpl2ForwardPwr reading will be 0 dBm.
   - The LB HPA LED will be illuminated blue.
   - The TRMS LB Status LED will be extinguished.
2. Switch OFF the LB HPA PSU circuit breaker (CB1, CB2, CB3 and CB4), located on the LB cabinet PDU.
   - The Norm LED's on the LB HPA PSU's (PS 1, PS2, PS3 and PS4) will be extinguished.
   - The front panel LED's on the LB HPA's (HPA 1, HPA 2, HPA 3 and HPA 4) will flash green and red alternately.
3. Switch OFF the TSC-L 5A circuit breaker, located on the BMS front panel.
   - The LED's on the LB HPA's will be extinguished.
4. Switch OFF the LBE 25A circuit breaker, located on the BMS front panel.
   - The LBE Power LED will be extinguished and the internal fan will turn off.
5. Switch OFF FAN 1 / FAN 2 (CB 9) and the FAN 3 / FAN 4 (CB10) circuit breakers, located on the LB cabinet PDU.
   - The HPA compartment fans will turn off (fans cannot be heard) and that the PDU FAN 1 and 2 LEDs will be extinguished.

6.5.2.3 High Band Sub-system Shutdown

The Independent DRU HB sub-system should be shut down in the following sequence:

1. Using the HBE GUI, set SysOperatingMode to standby.
   - The LBE GUI Cpl1ForwardPwr reading will be 0 dBm.
   - The HB HPA LED will be illuminated blue.
   - The LNA LED will be extinguished.
   - The TRMS HB Status LED will be extinguished.
2. Switch OFF the HB HPA PSU circuit breakers (CB1, CB2, CB3 and CB4), located on the HB cabinet PDU.
   - The Norm LED's on the HB HPA PSU's (PS 1, PS2, PS3 and PS4) will be extinguished.
   - The front panel LED's on the HB HPA's (HPA 1, HPA 2, HPA 3 and HPA 4) will flash green and red alternately.
3. Switch OFF the TSC-H 5A circuit breaker, located on the BMS front panel.
   - The LED's on the HB HPA's will be extinguished.
4. Switch OFF the HBE 10A circuit breaker, located on the BMS front panel.
   - The HBE Power LED will be extinguished and the internal fan will turn off.
5. Switch OFF FAN 1 / FAN 2 (CB 9) and the FAN 3 / FAN 4 (CB10) circuit breakers, located on the HB cabinet PDU.
   - The HPA compartment fans will turn off (fans cannot be heard) and that the PDU FAN 1 and 2 LEDs will be extinguished.

6.5.3 High Band Exciter (HBE) Replacement

	Always ensure that the DC power to the HBE has been switched OFF prior to removing the HBE. This will prevent injury caused by electric shock and prevent damage to equipment.

6.5.3.1 HBE Removal

The HBE should be removed in the following sequence:

1. Open the HB cabinet electronics compartment front and rear doors.
2. Using the HBE GUI, place the HB sub-system in standby mode.
3. Switch OFF the HB HPA PSU circuit breakers (CB1, CB2, CB3 and CB4), located on the HB cabinet PDU front panel.
4. Switch OFF the TSC-H 5A circuit breaker, located on the BMS front panel.
5. Switch OFF the HBE 10A circuit breaker, located on the BMS front panel.
6. Switch OFF the HBE rear panel power switch.
7. Disconnect the wires/cables connected to the HBE rear panel.
8. Loosen the four (4) knurled screws which secure the HBE to the mounting brackets – see Figure 6-1.
9. Remove the HBE from the HB cabinet electronics compartment and set it aside.

Figure 6-1 HBE Mounting Brackets with HBE

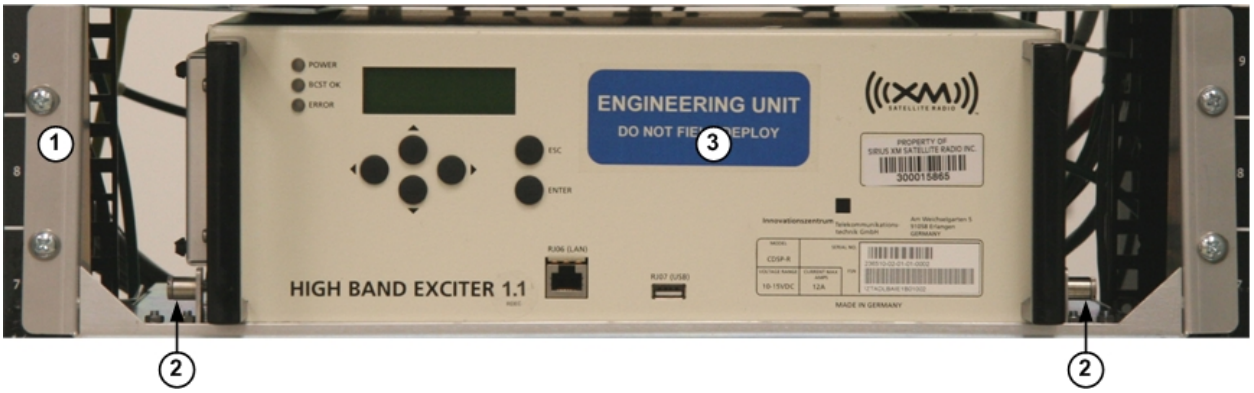

1) HBE Mounting Bracket
2) Knurled Screw
3) HBE

6.5.3.2 HBE Installation

	Any RF cable, which is terminated with a SMA connector, should be tightened with a 5/16" torque wrench to avoid over tightening and damaging the cable connector or mating connector.

The replacement HBE should be installed in the following sequence:

1. Slide the replacement HBE onto the mounting brackets in the HB cabinet electronics compartment above the BMS – see Figure 6-2.
2. Tighten the four (4) knurled screws which secure the HBE to the mounting brackets – see Figure 6-1.
3. Re-connect the wires/cables to the HBE rear panel in the order that they appear in Table 6-3.
4. Switch ON the HBE rear panel power switch.
5. Switch ON the HBE 10A circuit breaker, located on the BMS front panel.
6. Switch ON the TSC-H 5A circuit breaker, located on the BMS front panel.
7. Switch ON the HB HPA PSU circuit breakers (CB1, CB2, CB3 and CB4), located on the HB cabinet PDU front panel.
8. Please refer to SiriusXM instructions as well as the HBE Operating Manual to configure the HBE with specific settings for its assigned location.
9. Using the HBE GUI, place the HB sub-system in broadcast mode.
10. Close the electronics compartment front and rear doors.

Figure 6-2 HBE Mounting Brackets

PICTURE TBD

1) HBE Mounting Bracket
2) Knurled Screw

Figure 6-3 HBE Rear Panel

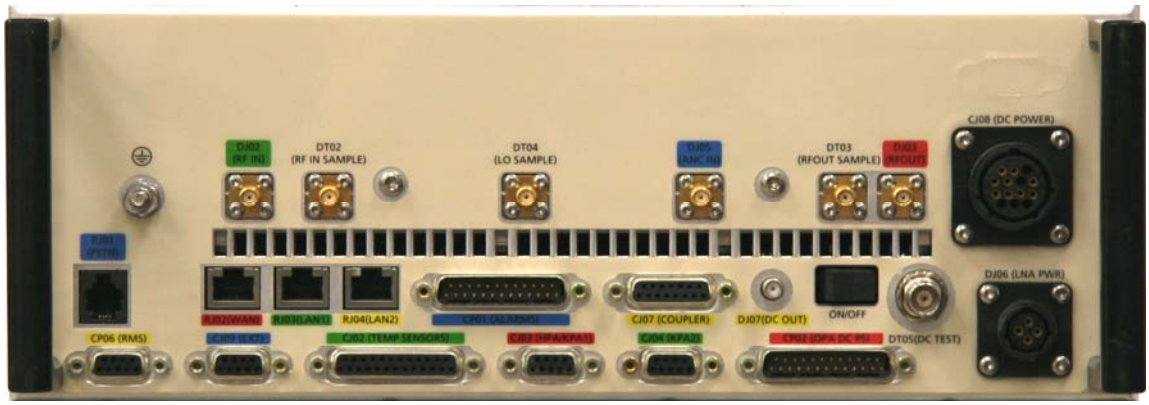

Table 6-3 HBE Rear Panel Connections

HBE Port	Name	Type	Cable Number
N/A	N/A	Ground Post	SX03-21916-05
CJ02	TEMP SENSORS	DB-25 (F)	SX03-21905-01
CJ03	HPA/KPA1	DB-9 (F)	SX03-21906-01
CP02	OPA DC PS	DB-25 (M)	SX03-10919-01
RJ02	WAN	RJ-45	SX03-22905-02
RJ03	LAN	RJ-45	SX03-22905-03
DJ06	LNA PWR	4-pos CPC	SX03-10902-01
CJ08	DC POWER	14-pos CPC	SX03-10903-01
DJ02	RF IN	SMA (F), 50 ohm	SX03-10909-02
DJ05	ANC IN	SMA (F), 50 ohm	SX03-21917-06
DJ03	RF OUT	SMA (F), 50 ohm	SX03-21917-01

6.5.4 Low Band Exciter (LBE) Replacement

	Always ensure that the DC power to the LBE has been switched OFF prior to removing the LBE. This will prevent injury caused by electric shock and prevent damage to equipment.

6.5.4.1 LBE Removal

The LBE should be removed in the following sequence:

1. Open the LB cabinet electronics compartment front and rear doors, as well as the HB cabinet front door.
2. Using the LBE GUI, place the LB sub-system in standby mode.
3. Switch OFF the LB HPA PSU circuit breaker (CB1, CB2, CB3 and CB4), located on the LB cabinet PDU front panel.
4. Switch OFF the TSC-L 5A circuit breaker, located on the BMS front panel.
5. Switch OFF the LBE 25A circuit breaker, located on the BMS front panel.
6. Switch OFF the LBE rear panel power switch.
7. Disconnect the wires/cables connected to the LBE rear panel.
8. Remove the two (2) Phillips pan head screws which secure the LBE to the mounting brackets – see Figure 6-4.
9. Remove the LBE from the LB cabinet electronics compartment and set it aside.

Figure 6-4 LBE Mounting Brackets with LBE

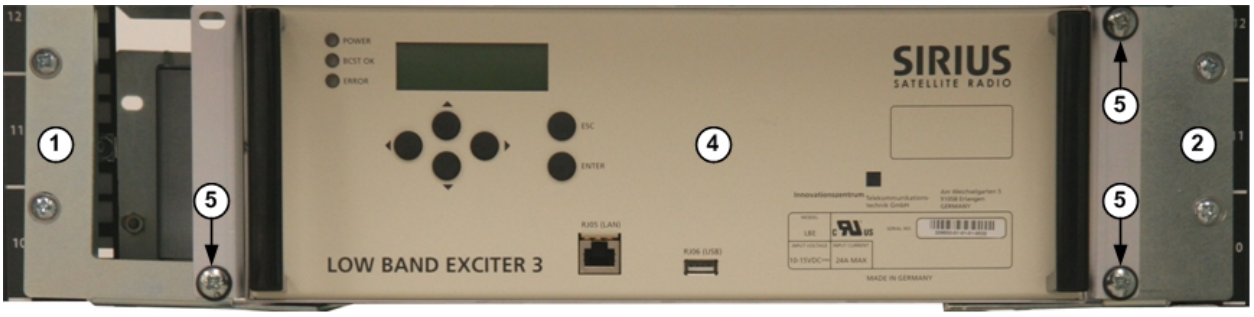

1) LBE Mounting Bracket (left side)
2) LBE Mounting Bracket (right side)
3) Mounting Screw Hole
4) LBE
5) XXX Screw

6.5.4.2 LBE Installation

⚠	Any RF cable, which is terminated with a SMA connector, should be tightened with a 5/16" torque wrench to avoid over tightening and damaging the cable connector or mating connector.

The replacement LBE should be installed in the following sequence:

1. Slide the replacement LBE onto the mounting brackets in the LB cabinet electronics compartment – see Figure 6-5.
2. Replace the two (2) Phillips pan head screws which secure the LBE to the mounting brackets – see Figure 6-4.
3. Re-connect the wires/cables to the LBE rear panel in the order that they appear in Table 6-4 (Combined DRU) or Table 6-5 (Independent DRU).
4. Switch ON the LBE rear panel power switch.
5. Switch ON the LBE 25A circuit breaker, located on the BMS front panel.
6. Switch ON the TSC-L 5A circuit breaker, located on the BMS front panel.
7. Switch ON the LB HPA PSU circuit breaker (CB1, CB2, CB3 and CB4), located on the LB cabinet PDU front panel.
8. Please refer to SiriusXM instructions as well as the LBE Operating Manual to configure the LBE with specific settings for its assigned location.
9. Using the LBE GUI, place the LB sub-system in transmit_only mode.
10. Close the electronics compartment front and rear doors.

Figure 6-5 LBE Mounting Brackets

1) LBE Mounting Bracket (left side)
2) LBE Mounting Bracket (right side)
3) Mounting Screw Hole

Figure 6-6 LBE Rear Panel

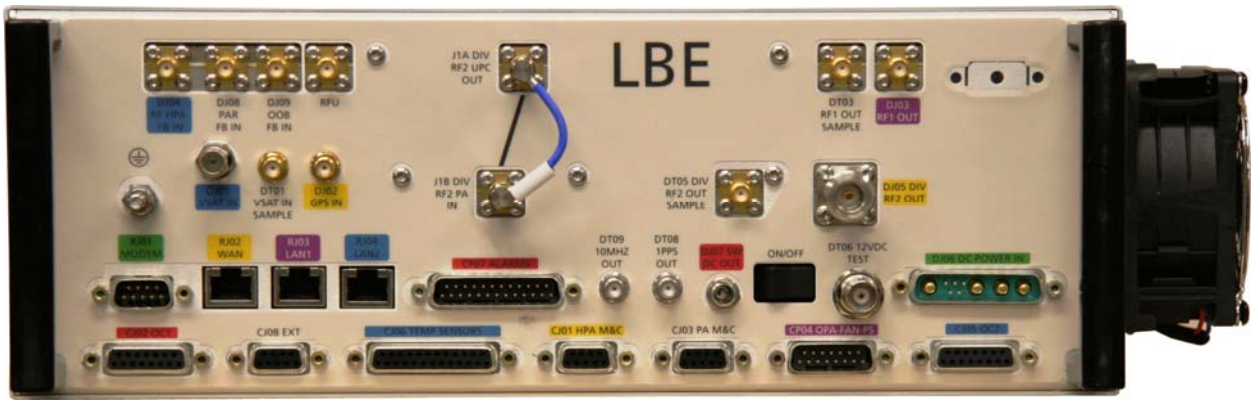

Table 6-4 LBE Rear Panel Connections – Combined DRU

LBE Port	Name	Type	Cable Number
N/A	N/A	Ground Post	SX03-21916-05
CJ02	OC1	DB-15 (F)	SX03-22904-02
CJ06	TEMP SENSORS	DB-25 (F)	SX03-10901-01
CJ01	HPA M&C	DB-9 (F)	SX03-22912-01
CP04	OPA-FAN-PS	DB-15 (M)	SX03-10920-01
RJ01	Modem	DB-9 (M)	N/A
RJ02	WAN	RJ-45	SX03-10905-04
RJ03	LAN	RJ-45	SX03-22905-02
RJ04	LAN	RJ-45	SX03-10905-01
CP07	ALARMS	DB-25 (M)	SX03-10922-01
DJ07	SW DC OUT	2.5 mm Locking DC Power Jack	SX03-10928-01
DJ06	DC POWER IN	Combination Sub-D	SX03-22906-01
DJ01	VSAT IN	F (F), 75 ohm	SX03-10910-01
DJ02	GPS IN	SMA (F), 50 ohm	SX03-10909-03
DJ05	DIV RF2 OUT	N (F), 50 ohm	TBD
DJ04	RF HPA FB IN	SMA (F), 50 ohm	SX03-22918-02
DJ03	RF1 OUT	SMA (F), 50 ohm	SX03-22918-01

Table 6-5 LBE Rear Panel Connections – Independent DRU

LBE Port	Name	Type	Cable Number
N/A	N/A	Ground Post	SX03-21916-05
CJ02	OC1	DB-15 (F)	SX03-22904-02
CJ06	TEMP SENSORS	DB-25 (F)	SX03-10901-01
CJ01	HPA M&C	DB-9 (F)	SX03-22912-01
CP04	OPA-FAN-PS	DB-15 (M)	SX03-10920-01
CJ05 (*)	OC2	DB-15 (F)	SX03-22904-01
RJ01	Modem	DB-9 (M)	N/A
RJ02	WAN	RJ-45	SX03-10905-04
RJ03	LAN	RJ-45	SX03-22905-02
RJ04	LAN	RJ-45	SX03-10905-01
CP07	ALARMS	DB-25 (M)	SX03-10922-01
DJ07	SW DC OUT	2.5 mm Locking DC Power Jack	SX03-10928-01
DJ06	DC POWER IN	Combination Sub-D	SX03-22906-01
DJ01	VSAT IN	F (F), 75 ohm	SX03-10910-01
DJ02	GPS IN	SMA (F), 50 ohm	SX03-10909-03
DJ05	DIV RF2 OUT	N (F), 50 ohm	TBD
DJ04	RF HPA FB IN	SMA (F), 50 ohm	SX03-22918-02
DJ03	RF1 OUT	SMA (F), 50 ohm	SX03-22918-01

6.5.5 Terrestrial Repeater Monitoring System (TRMS) Replacement

	Always ensure that the AC power to the TRMS has been switched OFF prior to removing the TRMS. This will prevent injury caused by electric shock and prevent damage to equipment.

6.5.5.1 TRMS Removal

The TRMS should be removed in the following sequence:

1. Open the LB cabinet electronics compartment front and rear doors, as well as the HB cabinet front door.
2. Switch OFF the TRMS rear panel power switch.
3. Switch OFF the TRMS circuit breaker (CB 8), located on the LB cabinet PDU front panel.
4. Disconnect the wires/cables connected to the TRMS rear panel.
5. Remove the four (4) Phillips pan head screws which secure the TRMS to the mounting rails – see Figure 6-7.
6. Remove the TRMS from the LB cabinet electronics compartment and set it aside.

Figure 6-7 TRMS in Rack

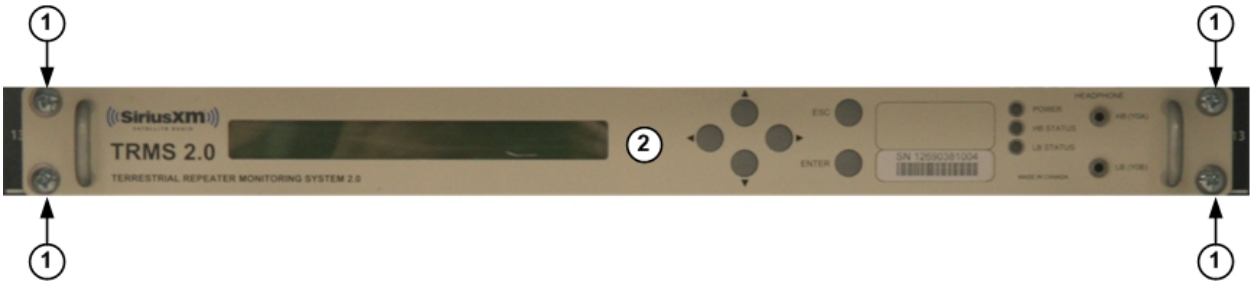

1) XXX Screw
2) TRMS

6.5.5.2 TRMS Installation

	Any RF cable, which is terminated with a SMA connector, should be tightened with a 5/16” torque wrench to avoid over tightening and damaging the cable connector or mating connector.

The replacement TRMS should be installed in the following sequence:

1. Slide the replacement TRMS into the open slot in the LB cabinet electronics compartment above the LBE.
2. Replace the four (4) Phillips pan head screws which secure the TRMS to the mounting rails – see Figure 6-7.
3. Re-connect the wires/cables to the TRMS rear panel in the order that they appear in Table 6-6.
4. Switch ON the TRMS circuit breaker (CB 8), located on the LB cabinet PDU front panel.
5. Switch ON the TRMS rear panel power switch.
6. Please refer to SiriusXM instructions as well as the TRMS Operating Manual to configure the TRMS with specific settings for its assigned location.
7. Close the electronics compartment front and rear doors.

Figure 6-8 TRMS Rear Panel

Table 6-6 TRMS Rear Panel Connections

TRMS Port	Name	Type	Cable Number
N/A	N/A	Ground Post	SX03-10926-07
Y1B	RF-IN	SMA (F), 50 ohm	SX03-10908-07
Y2B	RF IN	SMA (F), 50 ohm	SX03-10908-05
Y9B	LAN	RJ-45	SX03-10905-03
Y10A	WAN	RJ-45	SX03-10905-01
Y12	N/A (AC Input)	NEMA Socket Polarized Type IEC 603	SX03-10913-01

6.5.6 Air-to-Air Heat Exchanger/Heater Replacement

	Always ensure that the AC power to the air-to-air heat exchanger/heater has been switched OFF prior to removing the air-to-air heat exchanger/heater. This will prevent injury caused by electric shock and prevent damage to equipment.

	Always remove/install the air-to-air heat exchanger/heater with the aid of a second handler. The air-to-air heat exchanger/heater weighs approximately 50 lbs.

6.5.6.1 Air-to-Air Heat Exchanger/Heater Removal

The HB cabinet or LB cabinet air-to-air heat exchanger/heater should be removed in the following sequence:

1. Open the electronics compartment front and rear doors for the corresponding sub-system.
2. Switch OFF the HE circuit breaker (CB 5), located on the HB cabinet PDU or LB cabinet PDU.
3. Disconnect the 8-pin pluggable AC/communications terminal block from the air-to-air heat exchanger/heater inside panel – see Figure 6-9. The pluggable terminal block can be removed from the air-to-air heat exchanger/heater inside panel by loosening the two (2) slotted screws. Do not remove the individual wires from the pluggable terminal block.
4. Cut the cable ties which secure the two (2) temperature sensor cable assemblies (ELECTR COMP AIR INTAKE and ELECTR COMP AIR EXH) to the air-to-air heat exchanger/heater inside panel – see Figure 6-9.
5. Remove the twelve (12) 1/4-20 security socket head cap screws (with 1/4" flat washers and gaskets) which secure the air-to-air heat exchanger/heater to the cabinet – see Figure 6-10.
6. Using two handlers, one located on each side of the air-to-air heat exchanger/heater, carefully lift the air-to-air heat exchanger/heater from the side of the cabinet and set it aside. Ensure that the weatherproof gasket is not stuck to the side of the air-to-air heat exchanger/heater.

Figure 6-9 Air-to-Air Heat Exchanger/Heater Inside Panel

Picture TBD

1) Terminal Block
2) Cable Tie

Figure 6-10 Air-to-Air Heat Exchanger/Heater

Picture TBD

1) 1/4-20 Security Socket Head Cap Screw with Flat Washer and Gasket
2) Weatherproof Gasket

Figure 6-11 Air-to-Air Heat Exchanger/Heater Weatherproof Gasket

Picture TBD

6.5.6.2 Air-to-Air Heat Exchanger/Heater Installation

The replacement air-to-air heat exchanger/heater should be installed in HB cabinet or LB cabinet in the following sequence:

1. Before the replacement air-to-air heat exchanger/heater is installed, ensure that the weatherproof gasket is placed on the side of the air-to-air heat exchanger/heater that will rest against the side of the cabinet – see Figure 6-11.
2. Using two handlers, one located on each side of the air-to-air heat exchanger/heater, carefully lift the air-to-air heat exchanger/heater and place it in the opening in the side of the cabinet.
3. Replace the twelve (12) 1/4-20 socket head cap screws (with 1/4" flat washers and gaskets) which secure the air-to-air heat exchanger/heater to the cabinet – see Figure 6-10. A torque rating of 45.6 Inch Lbs. must be used to tighten the screws.
4. Install four (4) cable tie mounts on the air-to-air heat exchanger/heater inside panel – see Figure 6-9.
5. Secure the two (2) temperature sensor cable assemblies (ELECTR COMP AIR INTAKE and ELECTR COMP AIR EXH) to the cable tie mounts located on the air-to-air heat exchanger/heater inside panel – see Figure 6-9.
6. Re-connect the 8-pin pluggable terminal block to the air-to-air heat exchanger/heater inside panel 8-pin terminal block receptacle – see Figure 6-9.
7. Switch ON the HE circuit breaker (CB 5), located on the HB cabinet PDU or LB cabinet PDU.
8. Close the electronics compartment front and rear doors.

6.5.7 HPA Power Supply Unit 30 VDC Rectifier Module Replacement

	Always ensure that the AC power to the 30 VDC rectifier module has been switched OFF prior to removing the rectifier module. This will prevent injury caused by electric shock and prevent damage to equipment.

Figure 6-12 HPA PSU Shelf with Rectifier Modules

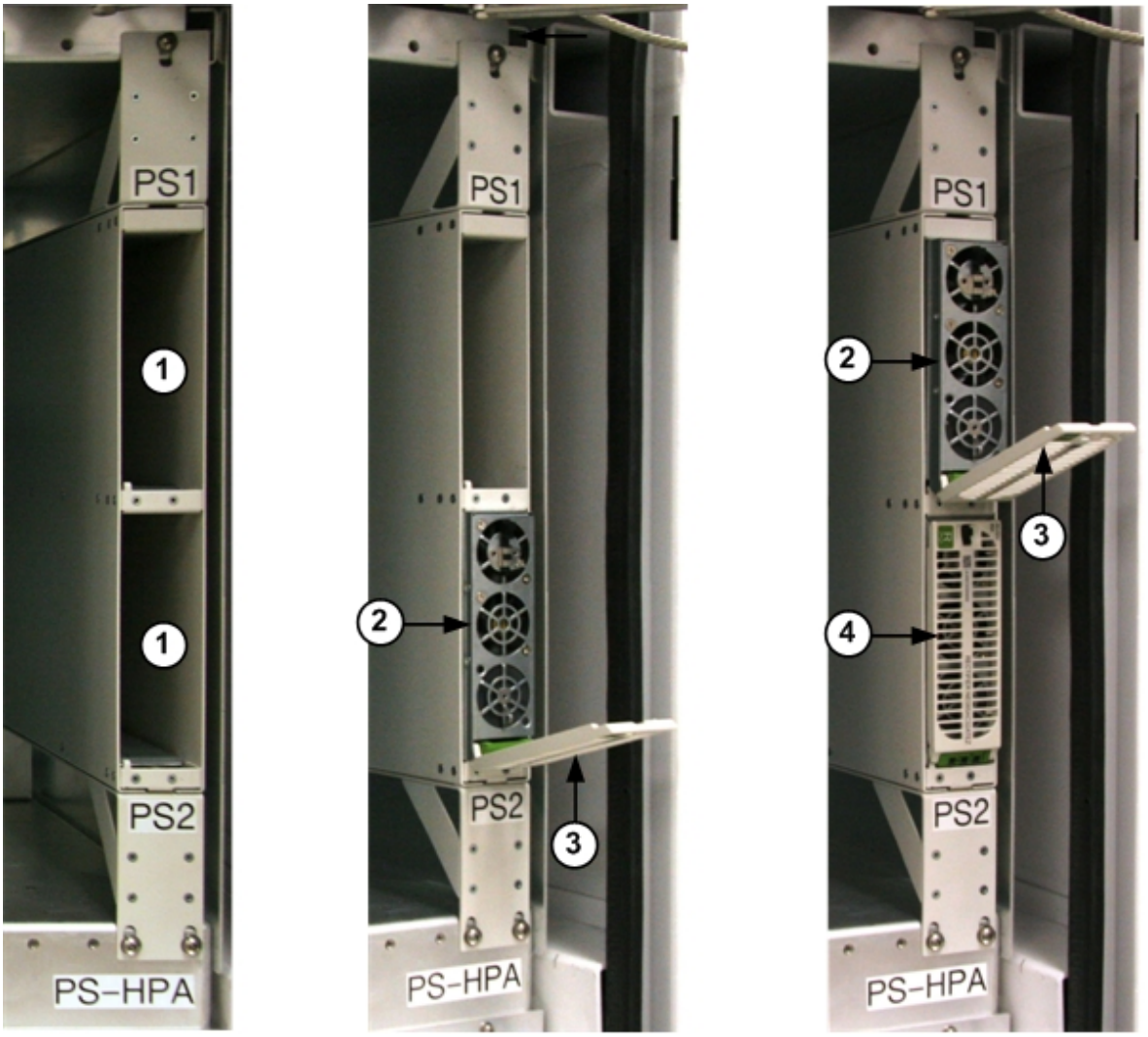

1) 10-32 Socket Head Cap Screw with Flat Washer and Lock Washer
2) HB HPA PS 1 (30 VDC Rectifier Module)
3) LB HPA PS 2 (30 VDC Rectifier Module)
4) Front Grill Cover Release Button
5) Disengaged Rectifier Module with Open Grill Cover

Figure 6-13 HPA PSU 30 VDC Rectifier Module

1) Front Grill/Cover
2) Front Grill/Cover Release Button

6.5.7.1 HPA PS (30 VDC Rectifier Module) Removal

A HPA PS should be removed in the following sequence:

1. Open the electronics compartment front door for the corresponding sub-system.
2. Open the cabinet HPA compartment front door for the corresponding sub-system.
3. Using the HBE GUI or LBE GUI, place the corresponding sub-system in standby mode.
4. Switch OFF the HPA PSU circuit breaker, located on the HB cabinet PDU or LB cabinet PDU, which corresponds to the affected rectifier module – please refer to section 2.3.4 or 2.3.5 for breaker designations.
5. Slide the black release button on the rectifier module front grill/cover cover down to release the grill/cover from the front of the rectifier module – see Figure 6-12.
6. Pull down on the rectifier module front grill/cover cover to disengage the rectifier module from the HPA PSU mounting shelf rear panel – see Figure 6-12.
7. Pull the rectifier module from the HPA PSU mounting shelf and set it aside.

6.5.7.2 High Band Cabinet HPA PS (30 VDC Rectifier Module) Installation

The replacement HPA PS should be installed in the following sequence:

1. Slide the black release button on the rectifier module front grill/cover cover to the right to release the grill/cover from the front of the rectifier module – see Figure 6-13.
2. Position the rectifier module so that the open grill cover is facing down.
3. Slide the rectifier module into the empty slot on the HPA PSU mounting shelf until it stops – see Figure 6-12.
4. To secure the rectifier module in place, lift the grill cover up and push it towards the rectifier module until it clicks in place. As the grill cover is pushed in place, the rectifier module will slide all the way into the slot – see Figure 6-12.
5. Switch ON HPA PSU circuit breaker, located on the HB cabinet PDU or LB cabinet PDU, which corresponds to the affected rectifier module – please refer to section 2.3.4 or 2.3.5 for breaker designations.
6. Using the HBE GUI or LBE GUI, place the corresponding sub-system in broadcast mode.
7. Close the HPA compartment front door and the electronics compartment front door.

6.5.8 HPA PSU Mounting Shelf Replacement

	Always ensure that the AC power to the HPA PSU mounting shelf has been switched OFF prior to removing the shelf. This will prevent injury caused by electric shock and prevent damage to equipment.

6.5.8.1 HPA PSU Mounting Shelf Removal

A HPA PSU mounting shelf should be removed in the following sequence:

1. Open the electronics compartment front door for the corresponding sub-system.
2. Open the HPA compartment front and rear doors for the corresponding sub-system.
3. Using the HBE GUI or LBE GUI, place the corresponding sub-system in standby mode.
4. Switch OFF the HPA PSU circuit breakers, located on the HB cabinet PDU or LB cabinet PDU – please refer to section 2.3.4 or 2.3.5 for breaker designations.
5. Remove the rectifier modules from the corresponding HPA PSU mounting shelf - see section 6.5.7.1.
6. Disconnect the 6-pin pluggable AC terminal block from the HPA PSU mounting shelf rear panel – see Figure 6-14. The pluggable terminal block can be removed from the HPA PSU mounting shelf rear panel by loosening the two (2) screws. Do not remove the individual wires from the pluggable terminal block.
7. Disconnect the serial cables (SX03-10924-02 and SX03-10924-01) from the HPA PSU mounting shelf rear panel serial connectors J1 and J2 respectively – see Figure 6-14.
8. Remove the plastic cover, which shields the POS and RTN DC output terminals – see Figure 6-14.
9. Disconnect the two (2) positive conductors from the HPA PSU mounting shelf rear panel 1/4-20 POS terminals – see Figure 6-14.
10. Disconnect the two (2) return conductors from the HPA PSU mounting shelf rear panel 1/4-20 RTN terminals – see Figure 6-14.
11. Disconnect the ground conductor from the HPA PSU mounting shelf rear panel 1/4-20 GND terminal – see Figure 6-14.
12. Remove the three (3) 10-32 socket head cap screws (with #10 lock washers and flat washers) which secure the HPA PSU mounting shelf to the HPA compartment frame – see Figure 6-12.
13. Remove the HPA PSU mounting shelf from the HPA compartment frame and set it aside.

Figure 6-14 HPA PSU Mounting Shelf Rear Panel

Picture TBD

1) 6-pin Terminal Block
2) Serial Connector J1
3) Serial Connector J2
4) Plastic Cover
5) Positive Conductor
6) Return Conductor
7) Ground Conductor

6.5.8.2 HPA PSU Mounting Shelf Installation

The replacement HPA PSU mounting shelf should be installed in the following sequence:

1. Slide the replacement HPA PSU mounting shelf into the open slot on the right side of the HPA compartment frame.
2. Replace the three (3) 10-32 socket head cap screws (with #10 lock washers and flat washers) which secure the HPA PSU mounting shelf to the HPA compartment frame – see Figure 6-12. A torque rating of 19.2 Inch Lbs. must be used to tighten the screws.
3. Re-connect the ground conductor to the HPA PSU mounting shelf rear panel 1/4-20 GND terminal – see Figure 6-14.
4. Re-connect the two (2) return conductors to the HPA PSU mounting shelf rear panel 1/4-20 RTN terminals – see Figure 6-14.
5. Re-connect the two (2) positive conductors to the HPA PSU mounting shelf rear panel 1/4-20 POS terminals – see Figure 6-14.
6. Replace the plastic cover, which shields the POS and RTN DC output terminals – see Figure 6-14.
7. Re-connect the serial cables (SX03-10924-02 and SX03-10924-01) to the HPA PSU mounting shelf rear panel serial connectors J1 and J2 respectively – see Figure 6-14.
8. Re-connect the 6-pin pluggable AC terminal block to the HPA PSU mounting shelf rear panel 6-pin AC terminal block receptacle – see Figure 6-14.
9. Install the rectifier modules in the HPA PSU mounting shelf - see section 6.5.7.2.
10. Switch ON the HPA PSU circuit breakers, located on the HB cabinet PDU or LB cabinet PDU – please refer to section 2.3.4 or 2.3.5 for breaker designations.
11. Using the HBE GUI, place the HB sub-system in broadcast mode or, using the LBE GUI, place the LB sub-system in transmit_only mode.
12. Close the HPA compartment front and rear doors.
13. Close the electronics compartment front door.

6.5.9 HPA Replacement

	Open or loose RF connections during operation may cause electric arcs that can cause burns and eye injuries, as well as damage equipment. Always ensure that the sub-system has been placed in standby mode and DC power to the HPA has been switched OFF.
	The HPA may be very hot from operation. Allow the HPA surface to cool before removing the equipment.
	Always remove/install the high power amplifiers with the aid of a second handler. The high power amplifier weighs approximately 55 lbs.
	To prevent damage to the connectors, do no stand the HPA on its rear panel.

Figure 6-15 Populated HPA Compartment

1) HPA 1
2) HPA 2
3) HPA 3
4) HPA 4
5) HPA PS 1 (30 VDC Rectifier Module)
6) HPA PS 2 (30 VDC Rectifier Module)
7) HPA PS 3 (30 VDC Rectifier Module)
8) HPA PS 4 (30 VDC Rectifier Module)

Figure 6-16 HPA Compartment (before and after)

PICTURE TBD

1) Slide Rail
2) Mounting Screw Hole Location
3) 10-32 Slotted Captive Mounting Screw
4) Magnetic Plate
5) Magnetic Plate 10-32 Slotted Captive Mounting Screw

Figure 6-17 HPA Front Panel

1) Handle

Figure 6-18 HPA Rear Panel

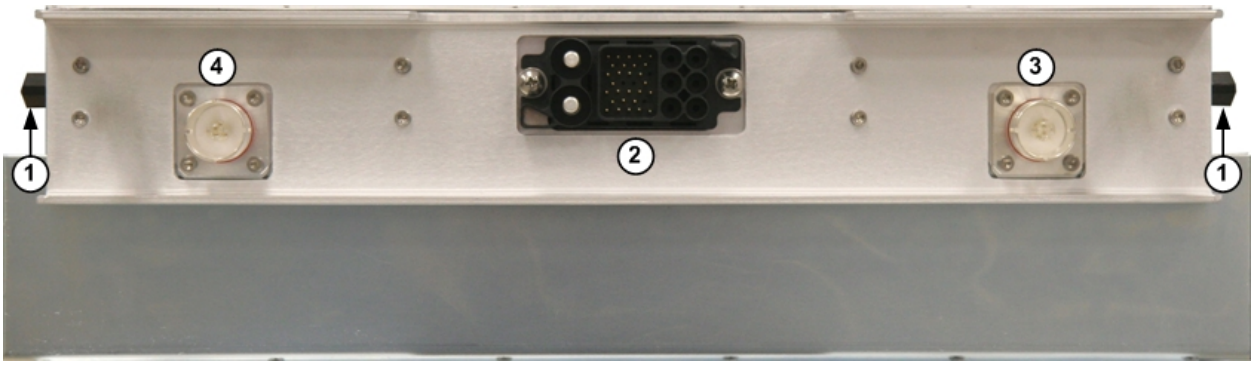

1) Slider
2) DC and Control Connector
3) 7/8” Blind Mate RF Input Connector
4) 7/8” Blind Mate RF Output Connector

6.5.9.1 HPA Removal

A HPA should be removed in the following sequence:

1. Open the electronics compartment front door for the corresponding sub-system.
2. Open the HPA compartment front and rear doors for the corresponding sub-system.
3. Using the HBE GUI or LBE GUI, place the corresponding sub-system in standby mode.
4. Switch OFF the HPA PSU circuit breakers, located on the HB cabinet PDU or LB cabinet PDU – please refer to section 2.3.4 or 2.3.5 for breaker designations.
5. Switch OFF the TSC-H 5A or TSC-L 5A circuit breaker, located on the BMS front panel.
6. Remove the magnetic plate from the HPA front panel and set it aside by loosening the 10-32 Slotted captive screw (located at the bottom of the HPA front panel) – see Figure 6-16.
7. Loosen the 10-32 Slotted captive screw (located at the top of the HPA front panel) – see Figure 6-16.
8. Using two handlers, one located on each side of the HPA, pull the HPA from the HPA compartment frame and set it aside.

6.5.9.2 HPA Installation

The replacement HPA should be installed in the following sequence:

1. Using two handlers, one located on each side of the HPA, lift the replacement HPA and position it level to the open space in the HPA compartment frame.
2. Carefully line up the HPA sliders (1 located on the top and 1 located on the bottom of the HPA) with the slide rails mounted in the HPA compartment frame – see Figure 6-16.
3. Slowly push the HPA into the HPA compartment frame until it stops.
4. There are three (3) blind mate connectors located on the HPA rear panel which are aligned with corresponding connectors on the HPA compartment frame backplane – see Figure 6-18. Ensure that the connectors are aligned properly and slowly push the HPA into the backplane until it stops. At this point, the back side of the HPA front panel should be flush with the HPA compartment frame.
5. Secure the HPA in place by tightening the 10-32 Slotted captive screw (located at the top of the HPA front panel) with a torque rating of 19.2 Inch Lbs. – see Figure 6-16.
6. Place the magnetic plate at the bottom of the HPA front panel and tighten the 10-32 Slotted captive screw with a torque rating of 19.2 Inch Lbs. – see Figure 6-16. Note: The magnetic plate must be installed in order for the HPA to power up later on.
7. Switch ON the TSC-H 5A or TSC-L 5A circuit breaker, located on the BMS front panel.
8. Switch ONN the HPA PSU circuit breakers, located on the HB cabinet PDU or LB cabinet PDU – please refer to section 2.3.4 or 2.3.5 for breaker designations.
9. Using the HBE GUI, place the HB sub-system in broadcast mode or, using the LBE GUI, place the LB sub-system in transmit_only mode.
10. Close the HPA compartment front door and the electronics compartment front door.

6.5.10 Air Intake Filter Replacement

6.5.10.1 Air Intake Filter Removal

The air intake filter should be removed in the following sequence:

1. Remove the ten (10) 1/4-20 security socket head cap screws (with #10 flat washers and gaskets) which secure the air intake to the cabinet – see Figure 6-19.
2. Lift the air intake away from the cabinet and set it aside – see Figure 6-20.
3. Remove the air filter from the air intake and set it aside – see Figure 6-21.

Figure 6-19 Air Intake Mounted On Cabinet

Picture TBD

Figure 6-20 Air Intake with Filter

Picture TBD

Figure 6-21 Air Filter

Picture TBD

6.5.10.2 Air Intake Filter Installation

The replacement air intake filter should be installed in the following sequence:

1. Install the air filter in the air intake – see Figure 6-20.
2. Lift the air intake and position it over the opening in the cabinet.
3. Replace the ten (10) 1/4-20 security socket head cap screws (with #10 flat washers and gaskets) which secure the air intake to the cabinet – see Figure 6-19. A torque rating of 45.6 Inch Lbs. must be used to tighten the screws.

6.5.11 Fan Box Replacement

	Always ensure that the HB or LB sub-system has been placed in standby mode and DC power to the corresponding HPAs has been disabled. This will prevent damage to the HPAs due to overheating.

	Always ensure that the AC power to the fan box has been switched OFF prior to removing the fan box. This will prevent injury caused by electric shock and prevent damage to equipment.

	Always remove/install the fan box with the aid of a second handler. The fan box weighs approximately 38 lbs.

6.5.11.1 Fan Box Removal

The fan box should be removed in the following sequence:

1. Open the electronics compartment front door for the corresponding sub-system.
2. Open the HPA compartment rear door for the corresponding sub-system.
3. Using the HBE GUI or LBE GUI, place the corresponding sub-system in standby mode.
4. Using the LBE GUI, place the LB sub-system in standby mode.
5. Switch OFF the HPA PSU circuit breakers, located on the HB cabinet PDU or LB cabinet PDU – please refer to section 2.3.4 or 2.3.5 for breaker designations.
6. Remove the four (4) lifting eyes from the cabinet hood – see Figure 6-22.
7. Carefully lift the cabinet hood from the top of the cabinet and place it aside.
8. Disconnect the fan box AC power cables from the FAN 1 / FAN 2 or FAN 3 / FAN 4 panel mount connectors located on the HPA compartment frame backplane – see Figure 6-23.
9. Cut the cable ties which secure the fan box AC power cables to the top of the HPA compartment – see Figure 6-24.
10. Remove the eight (8) 1/4-20 socket head cap screws (with 1/4" lock washers and flat washers) which secure the fan box to the cabinet – see Figure 6-25.
11. Using two handlers, one located on each side of the cabinet, carefully lift the fan box from the top of the cabinet and set it aside. Ensure that the weatherproof gasket is not stuck to the bottom of the fan box.

Figure 6-22 Cabinet Top Hood

Picture TBD

Figure 6-23 Fan Box AC Power Cable Disconnect

Picture TBD

Figure 6-24 Fan Box AC Power Cable Ties

Picture TBD

Figure 6-25 Fan Box Mounting Screws

Picture TBD

Figure 6-26 Fan Box Weatherproof Gasket

Picture TBD

6.5.11.2 Fan Box Installation

The replacement fan box should be installed in the following sequence:

1. Before the replacement fan box is installed, ensure that the weatherproof gasket is placed on the top of the cabinet where the fan box will be installed – see Figure 6-26.
2. Using two handlers, one located on each side of the cabinet, carefully lift the fan box and place it over the opening in the top of the cabinet.
3. Replace the eight (8) 1/4-20 socket head cap screws (with 1/4" lock washers and flat washers) which secure the fan box to the cabinet – see Figure 6-25. A torque rating of 45.6 Inch Lbs. must be used to tighten the screws.
4. Route the fan box AC power cables to the HPA compartment frame backplane and secure the AC power cables to the cable tie mounts located in the cabinet – see Figure 6-24.
5. Re-connect the fan box AC power cables to the FAN 1 / FAN 2 or FAN 3 / FAN 4 panel mount connectors located on the HPA compartment frame backplane – see Figure 6-23.
6. Using two handlers, one located on each side of the cabinet, carefully lift the cabinet hood and place on top of the cabinet hood stands.
7. Secure the top hood in place by replacing the four (4) lifting eyes – see Figure 6-22.
8. Switch ON the HPA PSU circuit breakers, located on the HB cabinet PDU or LB cabinet PDU – please refer to section 2.3.4 or 2.3.5 for breaker designations.
9. Using the HBE GUI, place the HB sub-system in broadcast mode or, using the LBE GUI, place the LB sub-system in transmit_only mode.
10. Close the HPA compartment rear door and the electronics compartment front door.

Unique Broadband Systems Ltd.

Chapter 7

Contact Information

Contents

7 Contact Information 7-1
7.1 Limited 3 Year Warranty 7-1
7.2 Liability 7-1

This page has intentionally been left blank.

7 Contact Information

7.1 Limited 3 Year Warranty

UBS' standard warranty is three (3) years from the project completion date, provided that the warranty labels have not been broken. Opening any the components/sub-assemblies without the expressed, written consent of UBS will automatically void the warranty for said component/sub-assembly.

UBS' liability for a warranty failure applies only to the equipment provided by UBS and excludes all other remedies, including, without limitation, incidental consequential damages. UBS is not responsible for any lost data, revenue, or any other consequential damages associated with a warranty or non-warranty failure.

In the event of a defect in/or failure of the UBS product, the customer shall contact UBS regarding the warranty claim. UBS is warranted to rework or repair the product at the UBS facility in Vaughan, Ontario once it has been properly returned by the customer.

To process a warranty claim or to obtain technical support, please contact UBS' Customer Service at either one of the following numbers:

Phone: 1-905-669-8533

Fax: 1-905-669-8516

7.2 Liability

The statements, specifications and instructions in this publication are believed to be correct to the best knowledge of Unique Broadband Systems Ltd. and its employees at the time of printing this manual. Unique Broadband Systems Ltd. will reserve the right to make changes to the content in this publication that reflects changes in equipment specifications and design. No liability is assumed for statements, results, or lack thereof from the use of information in this publication and for any direct or consequential damages, personal loss or injury and that all statements made herein are strictly to be used or relied on at the user's risk.

This document has been prepared by professional and properly trained personnel and the customer assumes all responsibility when using this document. UBS welcomes customer comments as part of the process of continual development and improvement of the documentation in the best way possible from the user's viewpoint. Please submit your comments to your UBS sales representative at the following address:

Unique Broadband Systems Ltd.
400 Spinnaker Way
Vaughan, Ontario, Canada
L4K 5Y9
Tel: (905) 669-8533
Fax: (905) 669-8516
Email: sales@uniquesys.com
Website: www.uniquesys.com

This page has intentionally been left blank.

Unique Broadband Systems Ltd.

Appendix A

Repeater Drawings and Diagrams

DRU-1k Terrestrial Repeater

Repeater RF Block Diagram SX03-20000-01-D09-02

DRU-1k Combined Terrestrial Repeater

HB Cabinet Wiring Diagram SX03-21900-02-D03-02
LB Cabinet Wiring Diagram SX03-22900-02-D03-02

This page has intentionally been left blank.

DRU1K
HPA System 2.3-2.4 GHz
Ver.02

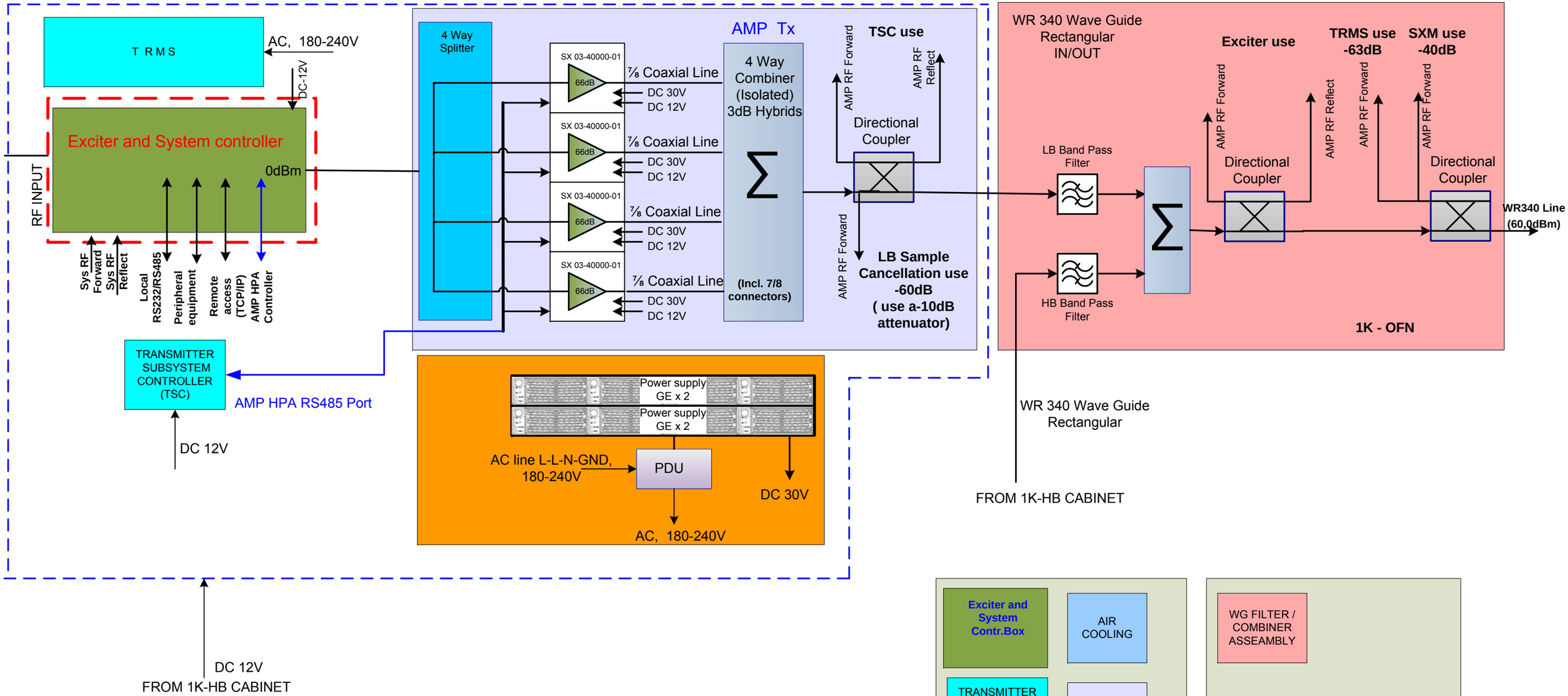

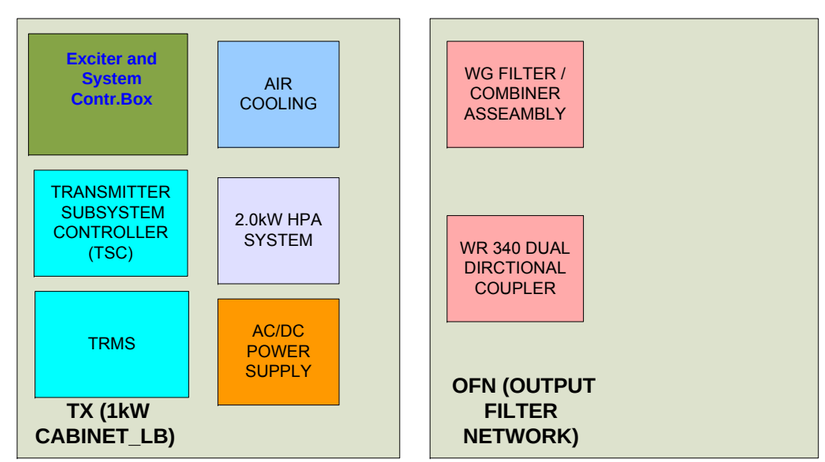

REV.	DATE	DESCRIPTION	ECO#	APPROVED

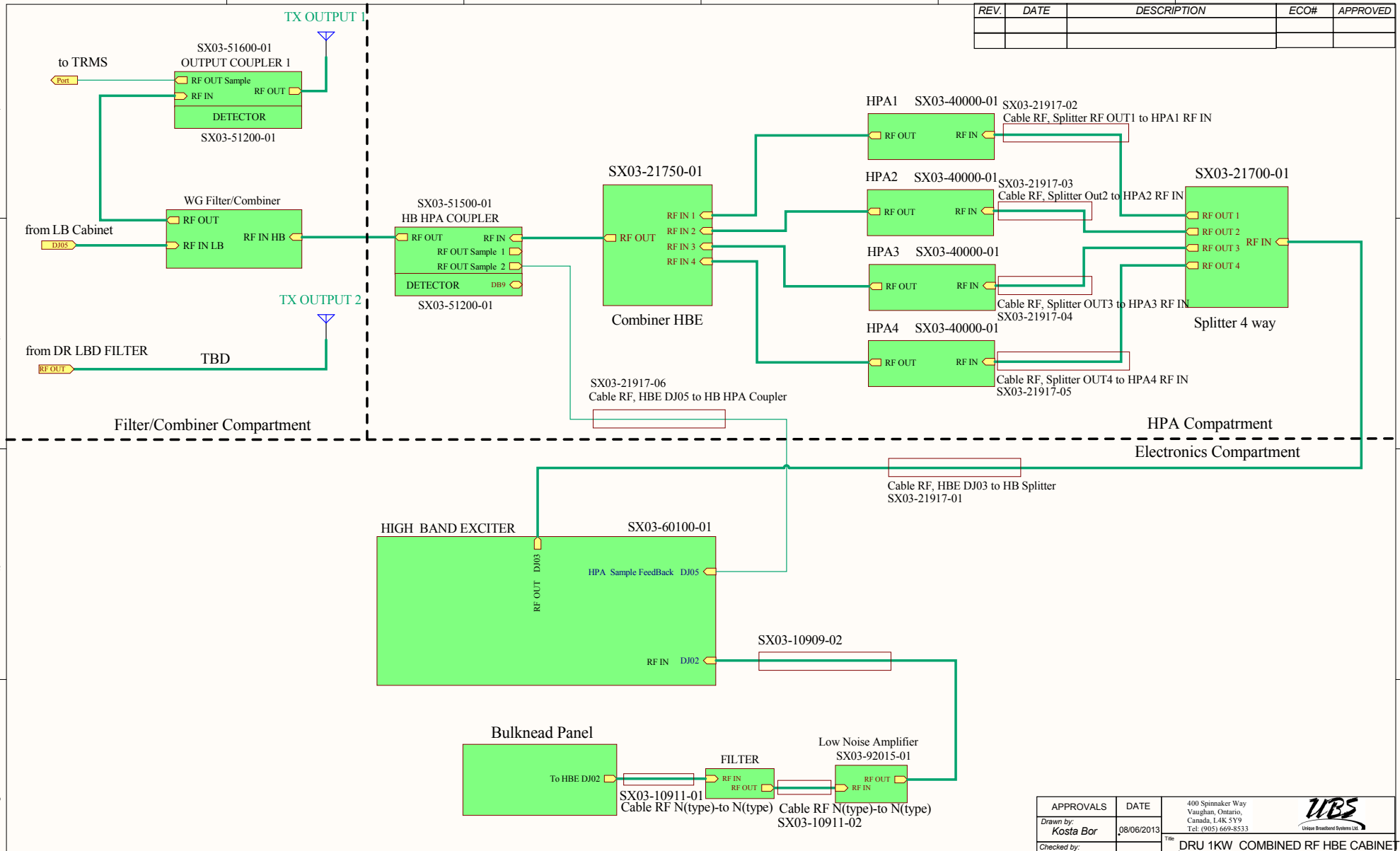

APPROVALS	DATE
Drawn by: Kosta Bor	08/06/2013
Checked by: Catalin O. Popescu	
Approved by: Rouslan Safarov	

400 Spinnaker Way
Vaughan, Ontario,
Canada, L4K 5Y9
Tel: (905) 669-8533

UBS Unique Broadband Systems Ltd.

Title: DRU 1KW COMBINED RF HBE CABINET

Size: B | Document Number: SX03-21900-02-D03 | Rev: 02

Scale: NONE | Sheet 1 of 1

REV.	DATE	DESCRIPTION	ECO#	APPROVED
02	11/26/2013	Added Terminal 12VDC		

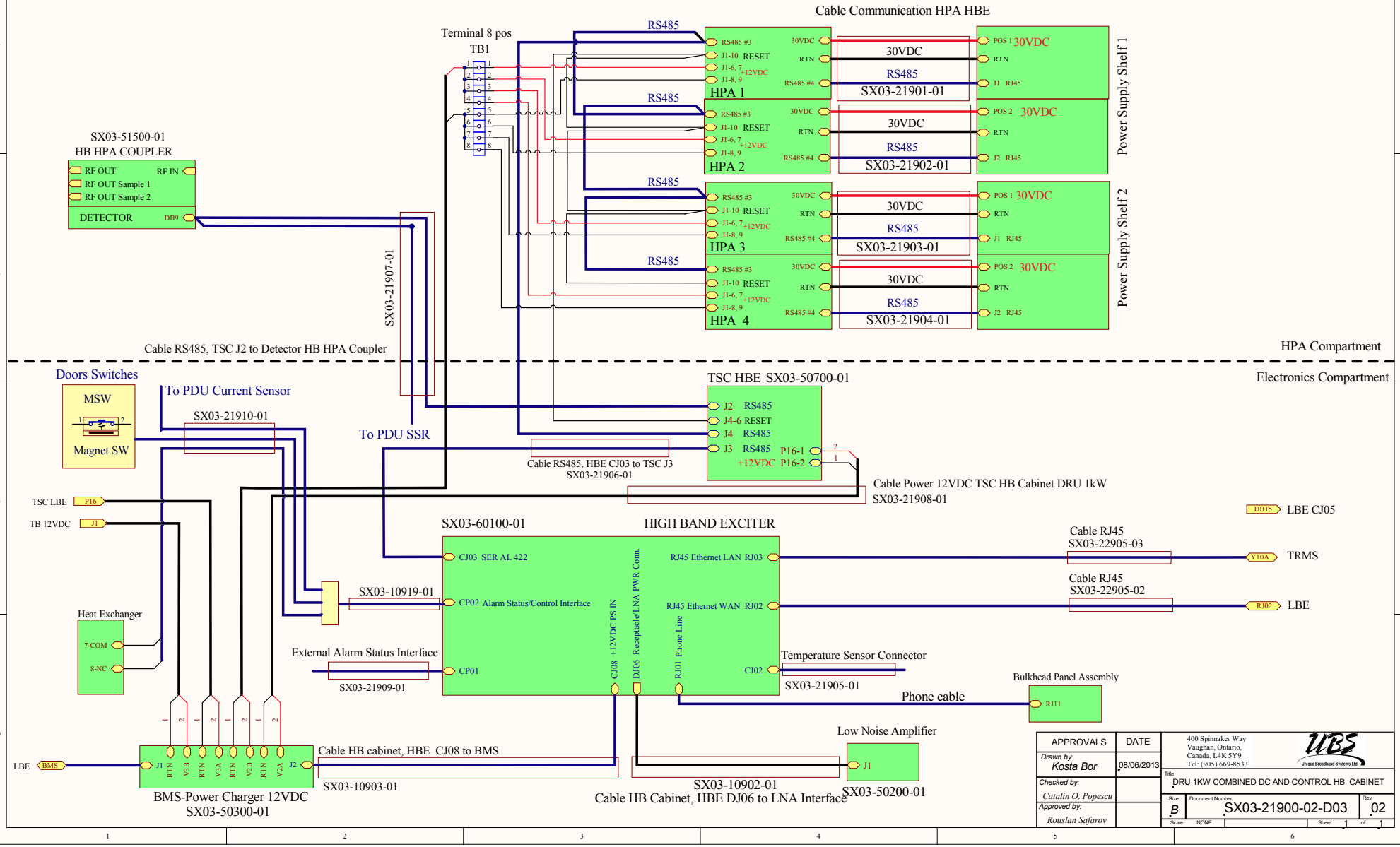

APPROVALS	DATE
Drawn by: Kosta Bor	08/06/2013
Checked by: Catalin O. Popescu	
Approved by: Rouslan Safarov	

400 Spinnaker Way
Vaughan, Ontario,
Canada, L4K 5Y9
Tel: (905) 669-8533

UBS Unique Broadband Systems Ltd.

Title: DRU 1KW COMBINED DC AND CONTROL HB CABINET

Size: B | Document Number: SX03-21900-02-D03 | Rev: 02

Scale: NONE | Sheet 1 of 1

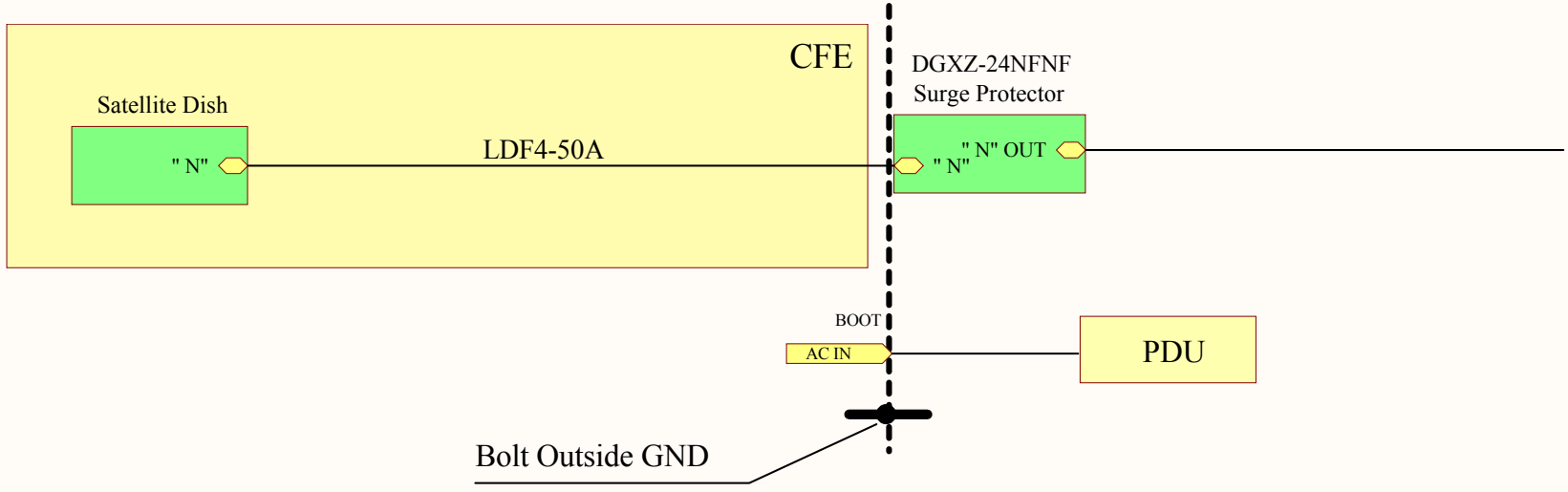

APPROVALS	DATE
Drawn by: Kosta Bor	11/26/2013
Checked by:	
Approved by:	

400 Spinnaker Way
Vaughan, Ontario,
Canada, L4K 5Y9
Tel: (905) 669-8533

UBS Unique Broadband Systems Ltd.

Title: DRU 1kW COMBINED HB Bulkhead Panel Assembly

Size	Document Number	Rev
B	SX03-21900-02-D03	02

Sheet 2 of 4

REV.	DATE	DESCRIPTION	ECO#	APPROVED

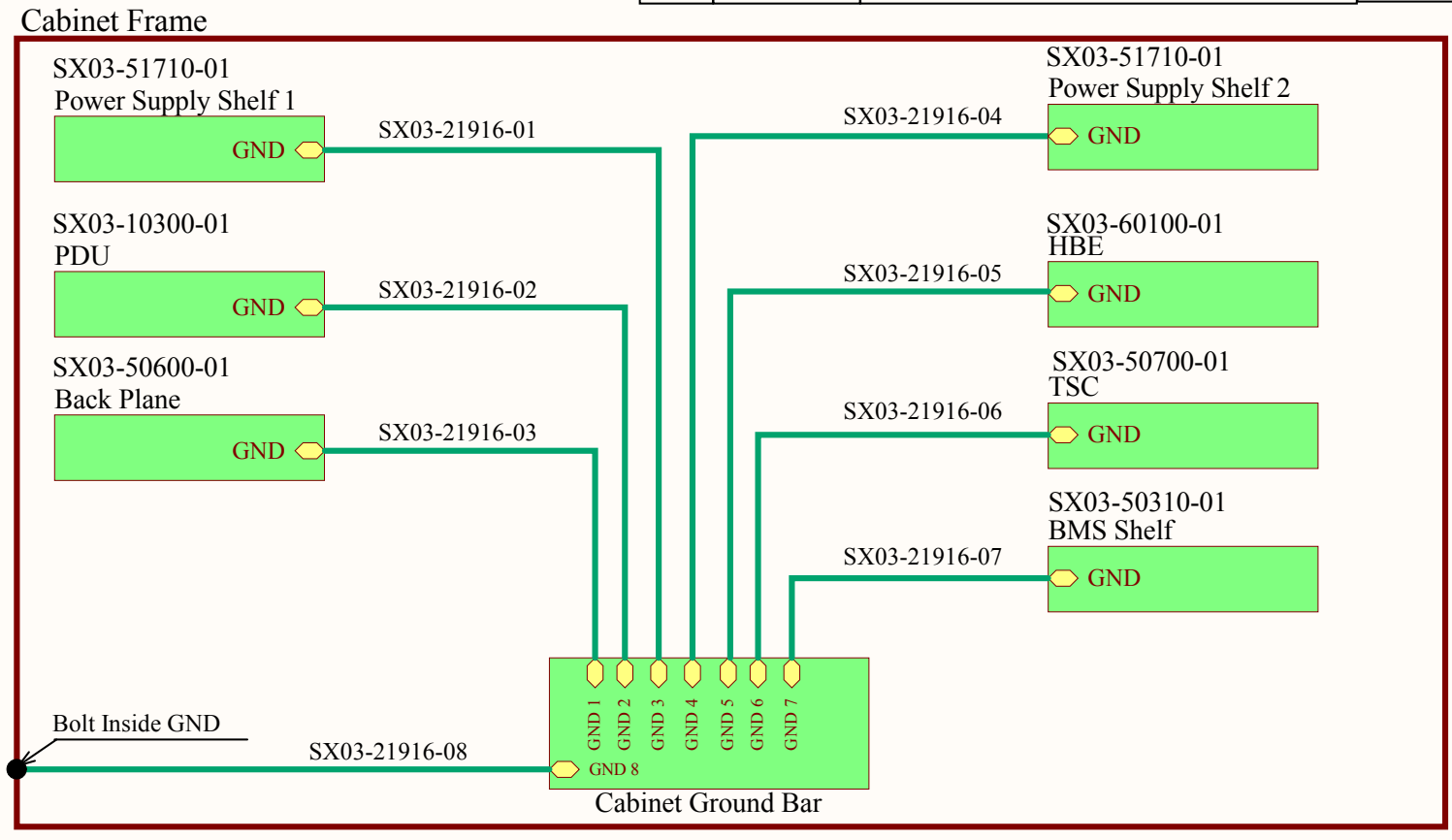

NN	Cable numbers	Manufacturing	QTY
1	SX03-21916-01	UBS	1
2	SX03-21916-02	UBS	1
3	SX03-21916-03	UBS	1
4	SX03-21916-04	UBS	1
5	SX03-21916-05	UBS	1
6	SX03-21916-06	UBS	1
7	SX03-21916-07	UBS	1
8	SX03-21916-08	UBS	1

Note : Length of cables are on DWG not including ring terminals

APPROVALS	DATE
Drawn by: Kosta Bor	10/30/2013
Checked by:	
Approved by:	

400 Spinnaker Way
Vaughan, Ontario,
Canada, L4K 5Y9
Tel: (905) 669-8533

UBS Unique Broadband Systems Ltd.

Title: DRU 1kW HB Cabinet, Safety GND Wiring Diagram

Size: B | Document Number: SX03-21900-02-D03 | Rev: 02

Scale : NONE | Sheet 1 of 1

REV.	DATE	DESCRIPTION	ECO#	APPROVED
02	11/26/2013	Added Terminal 12VDC		

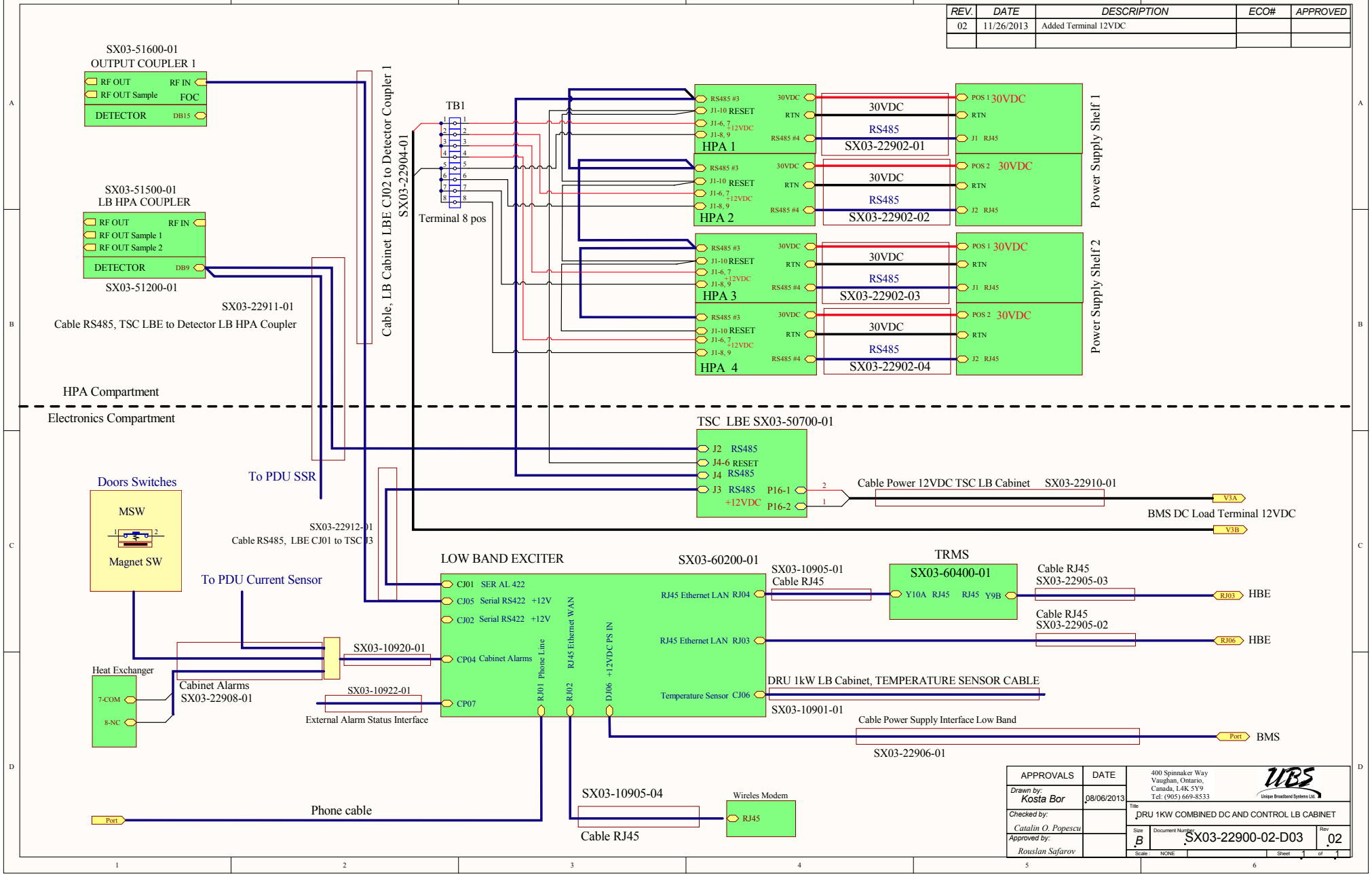

APPROVALS	DATE
Drawn by: Kosta Bor	08/06/2013
Checked by: Catalin O. Popescu	
Approved by: Rouslan Safarov	

400 Spinnaker Way
Vaughan, Ontario,
Canada, L4K 5Y9
Tel: (905) 669-8533

UBS Unique Broadband Systems Ltd.

Title: DRU 1KW COMBINED DC AND CONTROL LB CABINET

Size: B | Document Number: SX03-22900-02-D03 | Rev: 02

Scale: NONE | Sheet 1 of 1

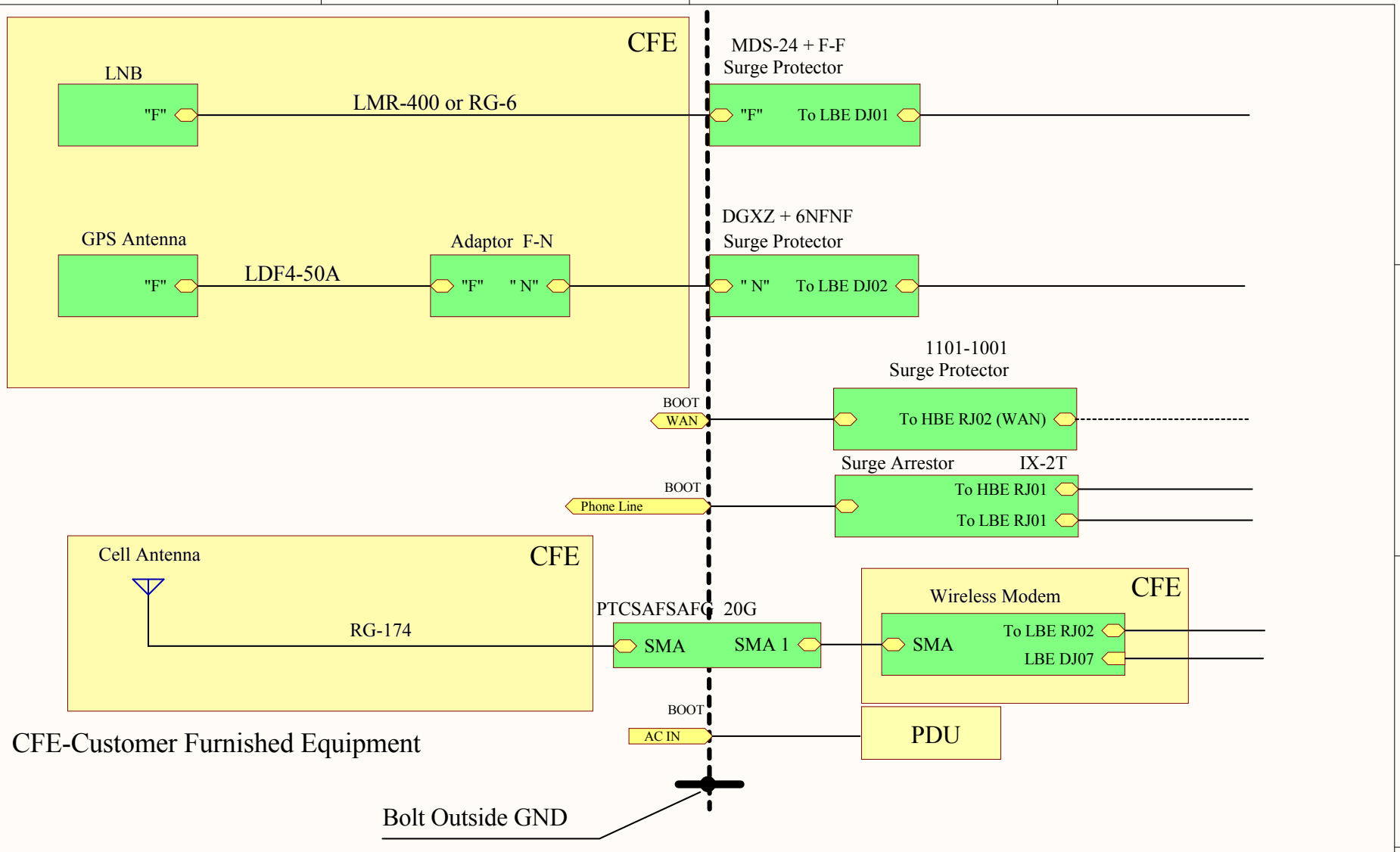

APPROVALS	DATE
Drawn by: Kosta Bor	06/10/2013
Checked by:	
Approved by:	

400 Spinnaker Way
Vaughan, Ontario,
Canada, L4K 5Y9
Tel: (905) 669-8533

UBS Unique Broadband Systems Ltd.

Title: DRU 1kW COMBINED LB Bulkhead Panel Assembly

Size	Document Number	Rev
B	SX03-22900-02-D03	02

Sheet 2 of 4

REV.	DATE	DESCRIPTION	ECO#	APPROVED

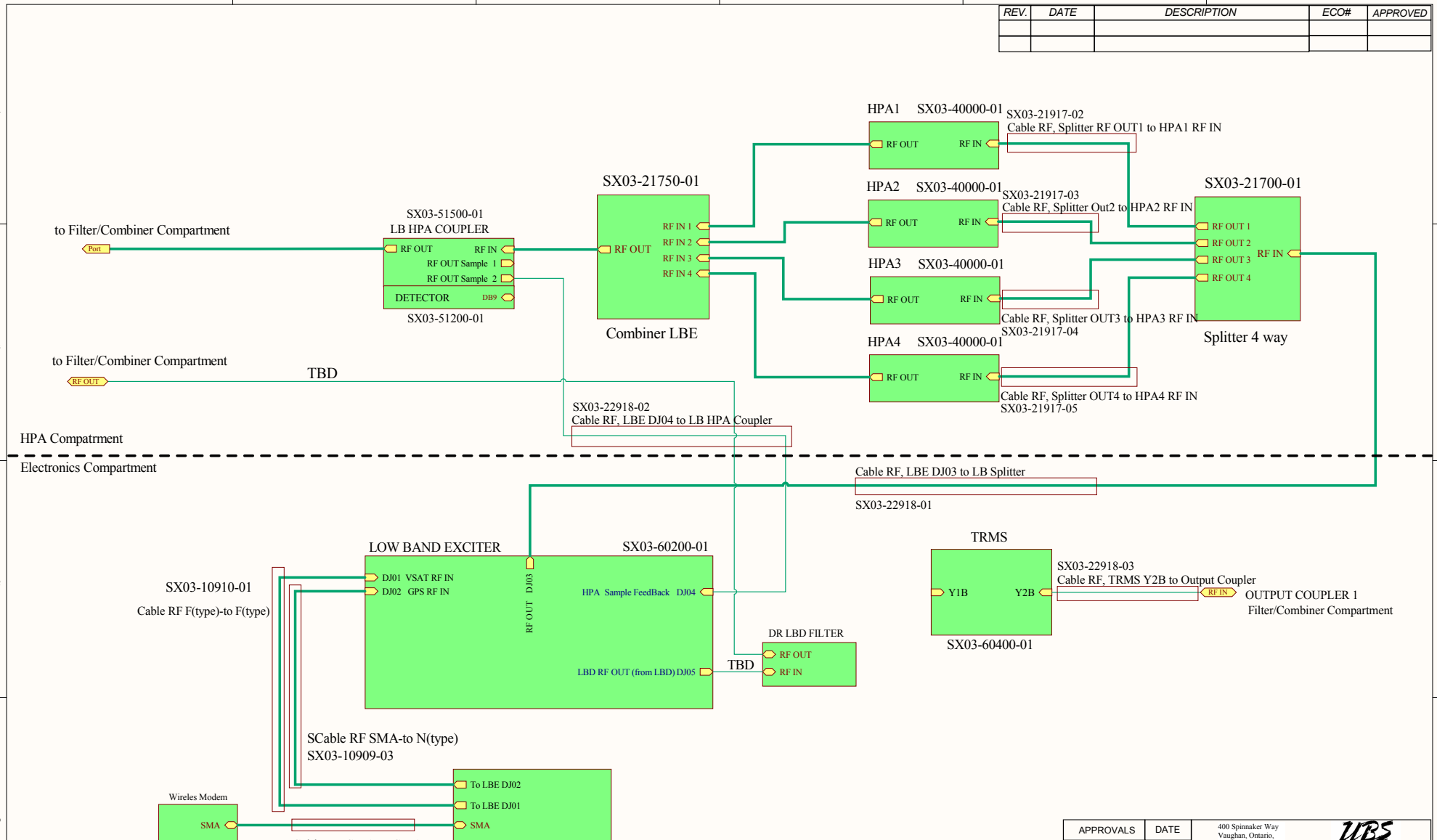

APPROVALS	DATE
Drawn by: Kosta Bor	08/06/2013
Checked by: Catalin O. Popescu	
Approved by: Rouslan Safarov	

400 Spinnaker Way
Vaughan, Ontario,
Canada, L4K 5Y9
Tel: (905) 669-8533
UBS Unique Broadband Systems Ltd.

Title: DRU 1KW COMBINED RF LBE CABINET

Size: B | Document Number: SX03-22900-02-D03 | Rev: 02

Scale: NONE | Sheet 1 of 1

REV.	DATE	DESCRIPTION	ECO#	APPROVED

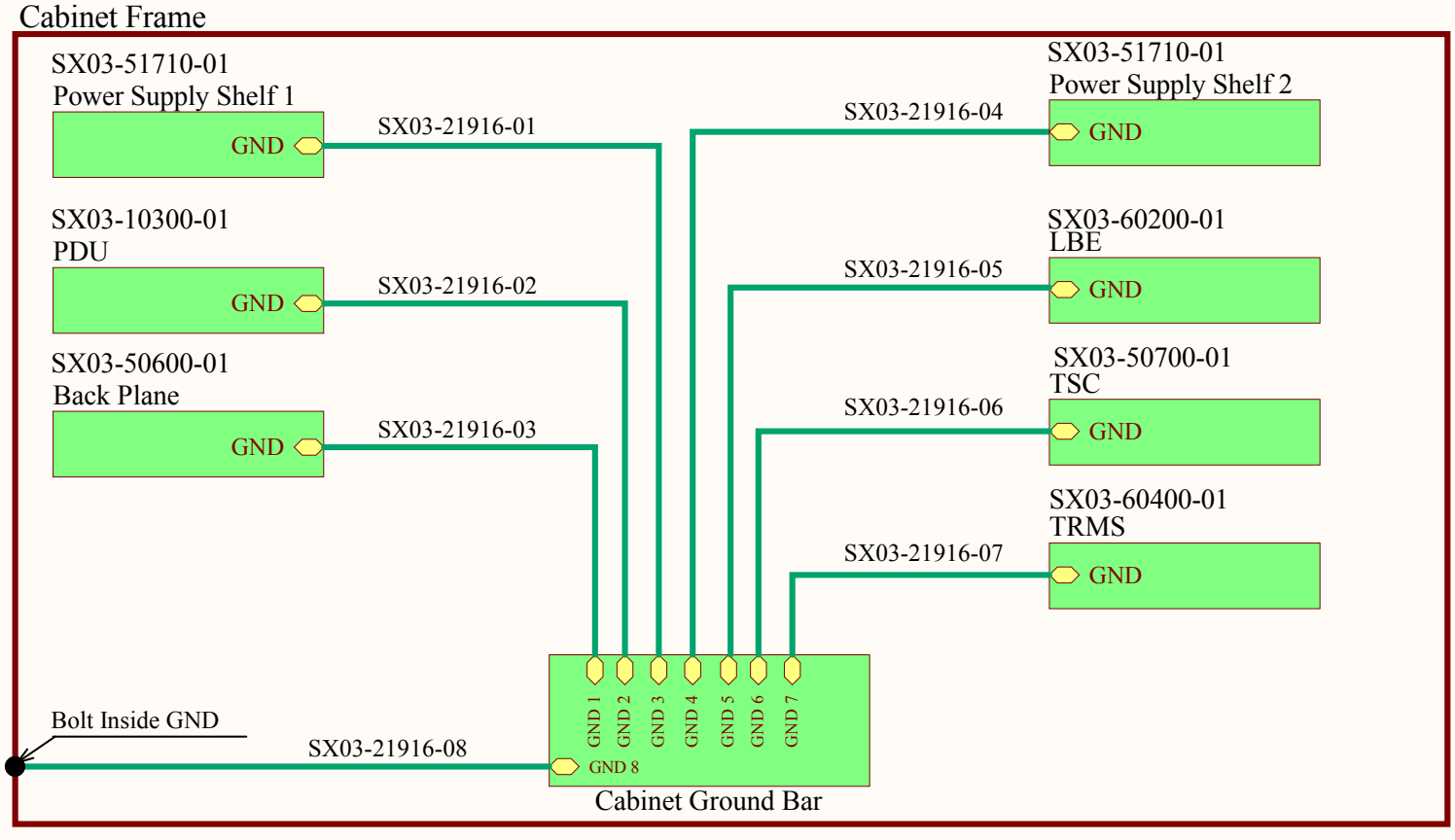

NN	Cable numbers	Manufacturing	QTY
1	SX03-21916-01	UBS	1
2	SX03-21916-02	UBS	1
3	SX03-21916-03	UBS	1
4	SX03-21916-04	UBS	1
5	SX03-21916-05	UBS	1
6	SX03-21916-06	UBS	1
7	SX03-21916-07	UBS	1
8	SX03-21916-08	UBS	1

Note : Length of cables are on DWG not including ring terminals

APPROVALS	DATE
Drawn by: Kosta Bor	10/30/2013
Checked by:	
Approved by:	

400 Spinnaker Way
Vaughan, Ontario,
Canada, L4K 5Y9
Tel: (905) 669-8533

UBS Unique Broadband Systems Ltd.

Title: DRU 1kW LB Cabinet, Safety GND Wiring Diagram

Size: B | Document Number: SX03-22900-02-D03 | Rev: 02

Scale : NONE | Sheet 1 of 1