American Standard

American Standard is devoted to making life, in the heart of your home, better every day...

...so, thank you for inviting us in! With the very best in kitchen and bathroom products, we are here to help make your life happier, healthier and simpler. Our commitment to quality, innovation and performance has made us part of your everyday routine for nearly 150 years, and we look forward to being a part of your life for many years to come.

Learn more at www.AmericanStandard.com

REGISTER YOUR WARRANTY

Try the easy-scan **QR code** to quickly enter your information or find your product's detailed warranty here:

www.AmericanStandard.com/warranty

Registering allows you to keep your product information safe, and us the ability to contact you in the event of a product recall or *any* news about your purchase.

And if ever you have a question or need help...?
Call us at 1-855-815-0004

M985163 EN (7/23)
775B405/775B505/775B605

American Standard
DetectLnk

OWNERS MANUAL

IoT DetectInk™ NextGen™ Integrated Faucet with Optional Above-Deck Mixing & SmarTherm®

775B405 / 775B505 / 775B605

Image shown may vary from product purchased.

INSIDE THE BOX

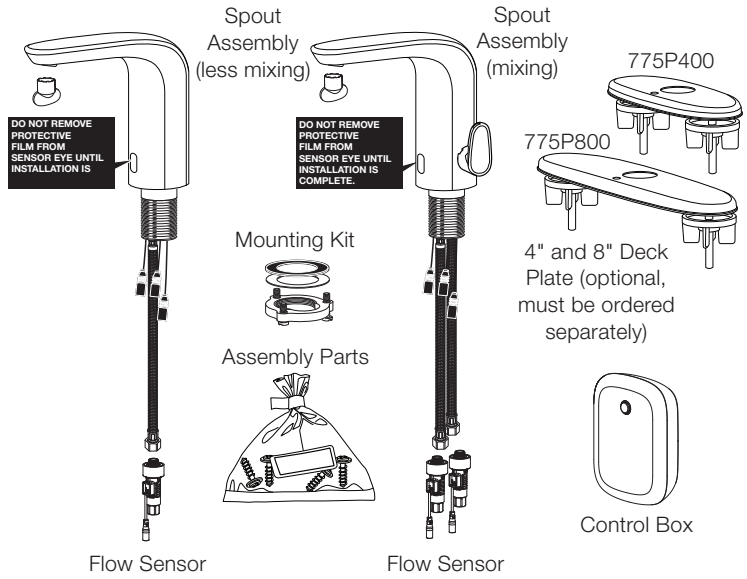

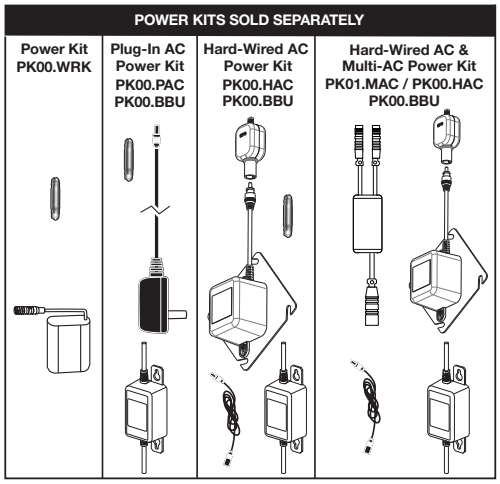

RECOMMENDED TOOLS

Installation steps will indicate which tools should be used with asscociated letter

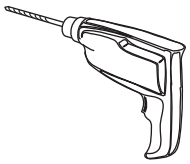

Drill

A

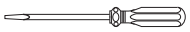

Flat Blade Screwdriver

B

Adjustable Wrench

C

NOTE TO INSTALLER: Please give this manual to the customer after installation.

To learn more about American Standard Selectronic® Products visit our website at: www.americanstandard-us.com or e-mail us at: ASdetectInk@lixil.com

For Parts, Service, Warranty or other Assistance, please call (844) CRT-TEAM / (844) 278-8326
(In Toronto Area only: 1-905-306-1093)

American Standard CRT Commercial Response Team

American Standard
DetectLnk

INSTALLATION INSTRUCTIONS

1 SPOUT ASSEMBLY INSTALLATION

Turn off hot and cold water supplies before beginning.

1. Make sure O-RING (**1**) is installed in spout base.

IMPORTANT: Do not use putty when installing faucet without escutcheon.

2. If installing DECK PLATE (**2**) (optional): Apply a bead of putty to bottom edge of PUTTY PLATE (**2**). Install SCREW (**11**) into the MOUNTING BASE OF THE FAUCET (**13**) and allign SCREW (**11**) with HOLE (**12**).

3. Insert supply HOSES (**3**), SHANK (**4**) and WIRES (**5**) through hole in DECK PLATE with PUTTY PLATE (**2**) and mounting surface.

4. Assemble RUBBER WASHER (**7**), BRASS WASHER (**8**) and THREADED LOCKNUT (**9**) onto SHANK (**4**) from underside of sink or mounting surface. Hand tighten LOCKNUT (**9**).

5. Use a screwdriver to tighten SCREWS (**10**) on LOCKNUT (**9**). Work your way around LOCKNUT (**9**), tightening the screws slightly each time until all are snug to ensure even pressure.

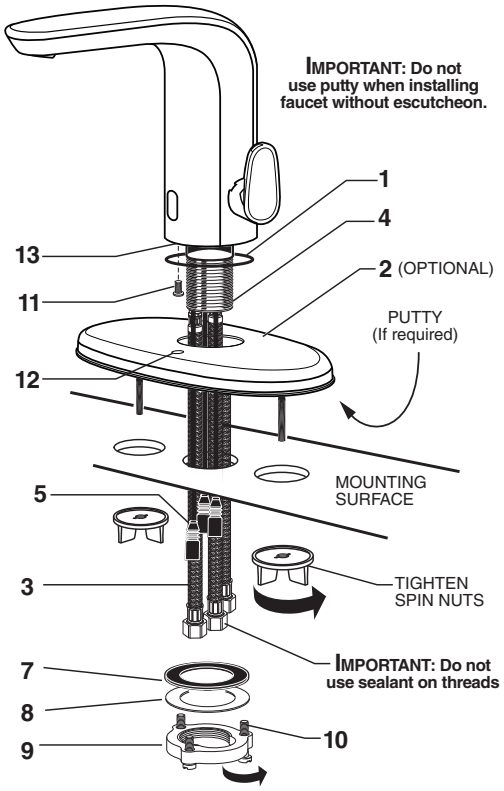

A

2 MAKE WATER SUPPLY CONNECTIONS

1. Turn off hot and cold water supplies before beginning.

2. Install FLOW SENSOR (**3**) on each wall supply outlet. Be sure that FLOW SENSOR (**3**) is inserted in the correct direction.

3. Connect HOT FLEXIBLE SUPPLY (marked with red stripe) (**1**) to FLOW SENSOR (**3**) on hot water control stop (**4**). Connect COLD FLEXIBLE SUPPLY (marked with blue stripe) (**2**) to FLOW SENSOR (**3**) on cold water control stop (**5**). Use adjustable wrench to tighten connections. Do not over tighten.

4. Faucet supplies are 24" long from faucet base.

Note: If additional supply length is required, installer must purchase those parts separately.
Important; If SUPPLY HOSES (1, 2) are too long, loop as illustrated to avoid kinking.

Note: For non-mixing models only one flow sensor and supply line connection is needed.

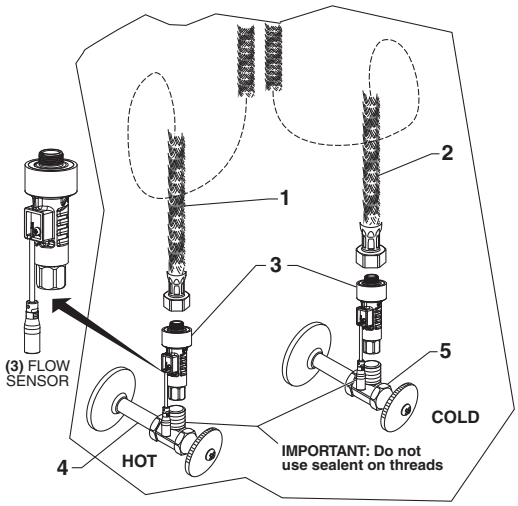

B

3 CONTROL BOX INSTALLATION

1. Remove the SCREW (**4**) from the bottom of the control box and lift the cover off.
2. Determine the mounting location of the control box by checking the wire length of the faucet and flow sensor when connected to the control box.
3. Place the CONTROL BOX (**1**) on the horizontal center line and mark the location of the mounting holes to be drilled.
4. Using a ¼" diameter drill bit, drill two mounting holes approximately 1" deep.
5. Install the two ANCHORS (**2**) provided into the mounting holes.
6. Partially thread the SCREWS (**3**) in to the ANCHORS (**2**).
7. Place CONTROL BOX (**1**) over the SCREWS (**3**) and slide down to lock.
8. Tighten SCREWS (**3**) if a more secure connection is desired.

Note: The cover should be left off as it will be reinstalled at a later point.

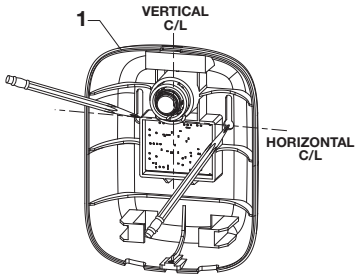

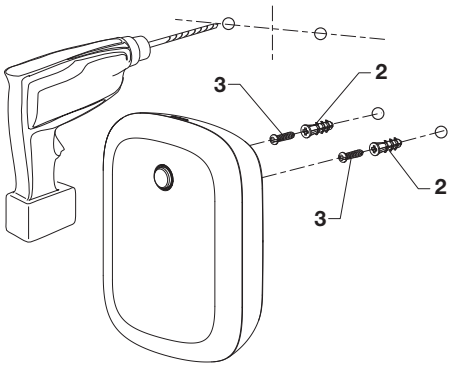

C

3.1 MAKE WIRED CONNECTIONS

1. Connect IR sensor wire to control box.
2. Connect solenoid wire to control box.
3. Connect flow sensor wires, hot and cold, to the control box.
4. Connect battery wire to the black and purple wire.

Note: for non-mixing versions only one flow sensor connection is needed.

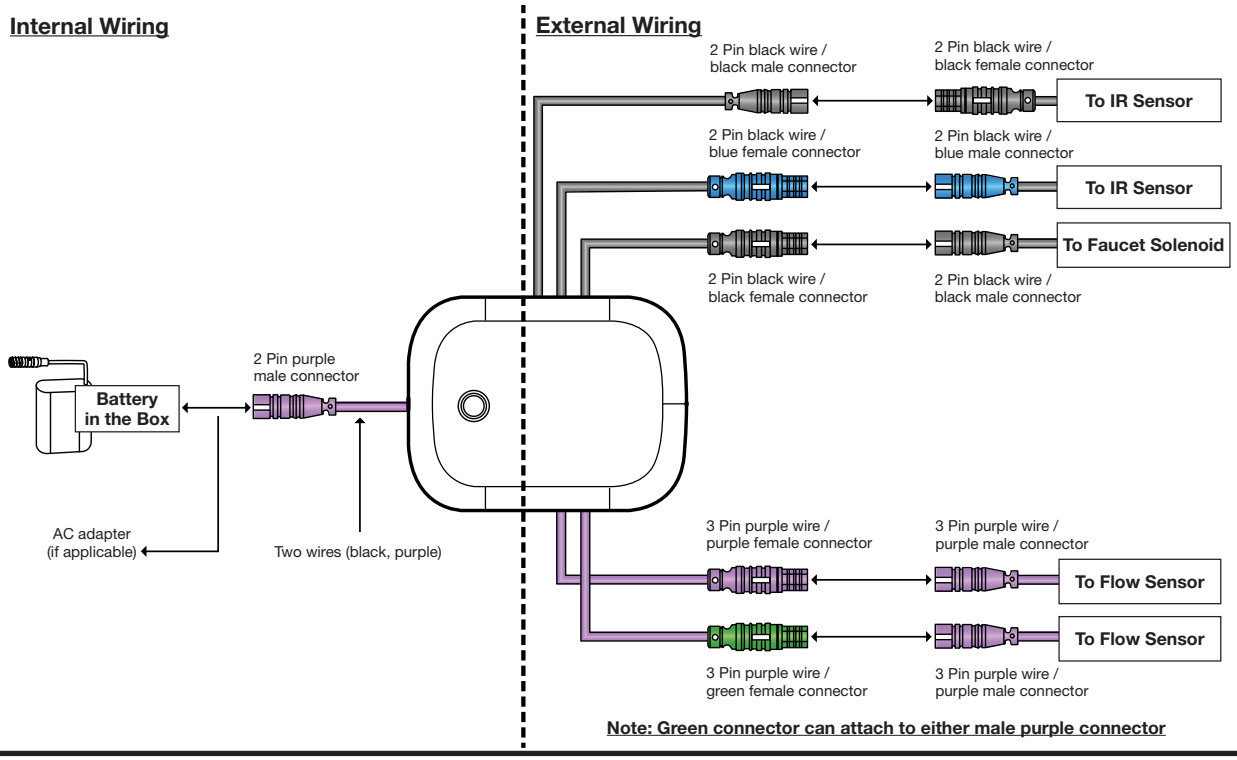

3.2 AC VERSIONS (HARD-WIRED / PLUG-IN POWER SUPPLY

Important: Turn off power to outlet or electrical box.

FOR PLUG-IN VERSION;

1. Connect PLUG-IN AC POWER SUPPLY (**2**) to BATTERY BACK-UP KIT (**7**).
2. Connect the other end of the 10’ extension cable to the black and purple wire (**9**) in the control box.
3. Connect PLUG-IN AC POWER SUPPLY (**2**) to wall outlet.

FOR HARD-WIRED VERSION;

1. Connect HARD-WIRED AC TRANSFORMER (**3**) to AC-DC CONVERTER (**6**).
2. Connect BACK-UP BATTERY (**8**) to 10' EXTENSION CABLE (**1**).
3. Connect AC-DC CONVERTER (**6**) to BACK-UP BATTERY (**8**).
4. Connect BLACK and PURPLE WIRE (**9**) to the other end of the 10' EXTENSION CABLE (**1**).
5. Make Black and White power line connections to HARD-WIRED AC TRANSFORMER (**3**) and mount on ELECTRICAL BOX (**5**).

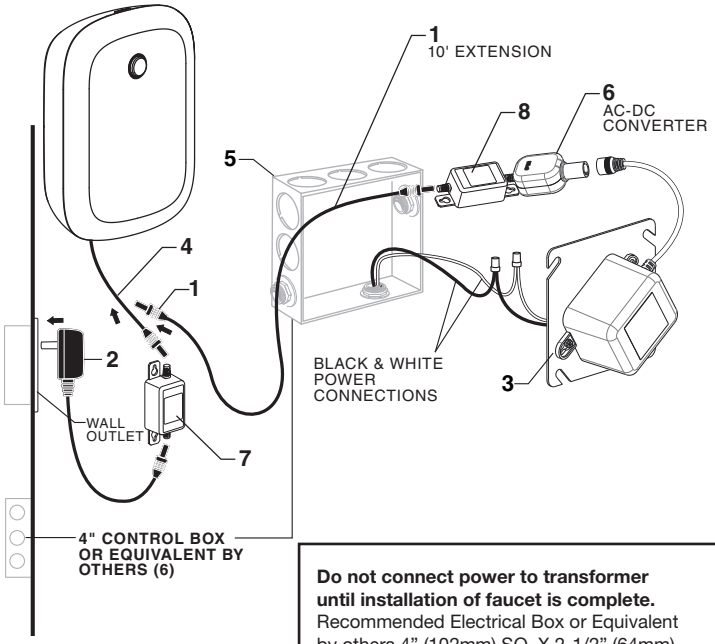

Do not connect power to transformer until installation of faucet is complete. Recommended Electrical Box or Equivalent by others 4” (102mm) SQ. X 2-1/2” (64mm) DEEP 2-GANG ELECTRICAL BOX **Appleton #4SD1** OR EQUAL (BY OTHERS).

CAUTION: Use only American Standard supplied transformers and cable sets. Using non-AS supplied cables, or cutting, splicing or modifying any components will void the warranty.

3.3 MULTI-AC VERSION (DAISY CHAIN)

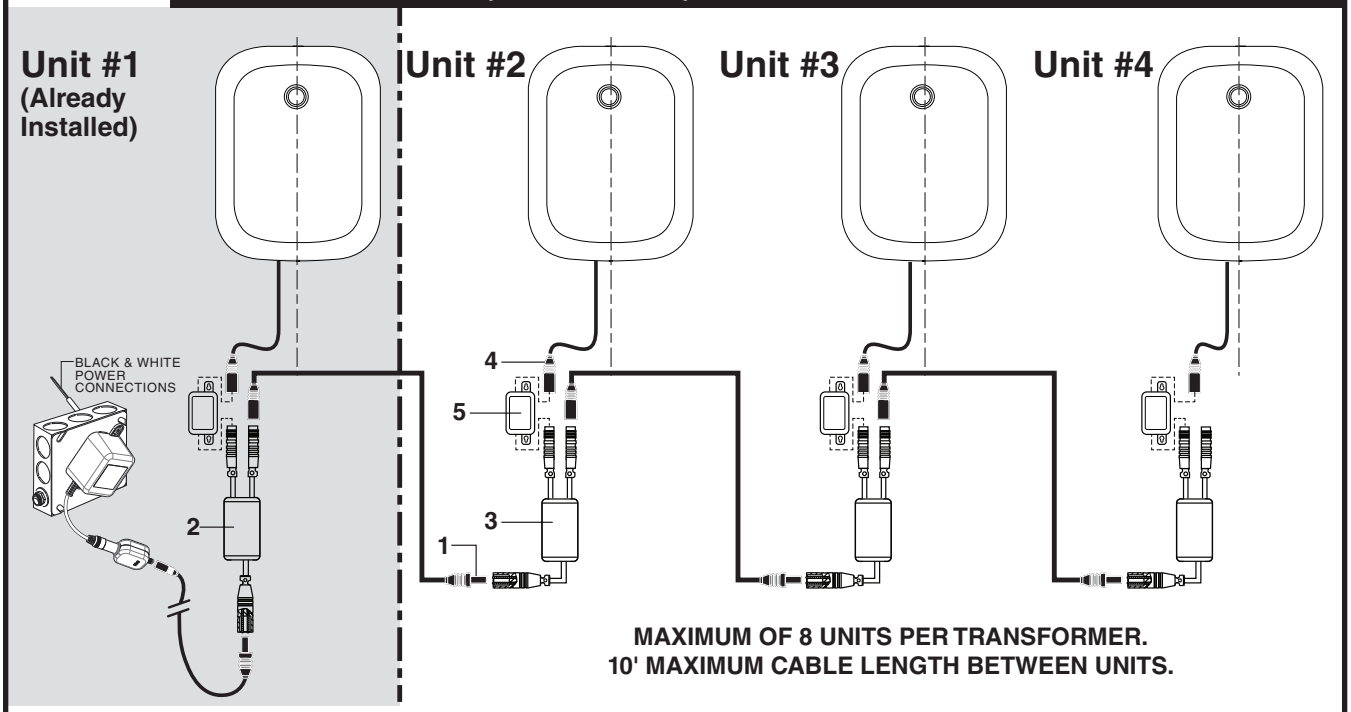

Important: Disconnect the first unit's Multi-AC Adapter from power supply before making daisy-chain connections.
Note: For Unit #1 electrical instructions, refer to Step 3.1.
For subsequent Units, refer to instructions below...

1. Connect one end of the 10' EXTENSION (**1**) to the available terminal of the previous unit's Multi-AC ADAPTER (**2**), and the other end to the single terminal of the current unit's Multi-AC ADAPTER (**3**).
2. Connect EXTENSION CABLE (**4**) to BATTERY BACK-UP KIT (**5**).
3. Connect the EXTENSION CABLE (**4**) to the black and purple wire (**6**).
4. Connect BATTERY BACK-UP KIT (**5**) to either of the two available terminals of Multi-AC ADAPTER (**3**).
5. Repeat Steps above for each additional Unit, for a Max. of 10 Units on one AC POWER SUPPLY.

4 REMOVE MIXING HANDLE

Adjust hot limit safety

To reduce the amount of hot water that can mix with cold, the installer can adjust hot limit stop (Four different settings).

1. Rotate Lever Handle (**5**) counter-clockwise to its stop position (100% cold).

2. Remove LEVER SCREW (**3**) and pull off the LEVER HANDLE (**5**).

3. Pull out LIMIT STOP (**1**) from the VALVE STEM (**2**).

4. Rotate LIMIT STOP (**1**) between the shaded area and insert back onto VALVE STEM (**2**).

5. Each notch on the LIMIT STOP (**1**) will reduce the amount of hot water by approximately 3%. For example, the 2nd notch will have 97% of maximum temp, the 3rd notch will have 94% and the fourth will be 91%.

6. Replace LEVER HANDLE (**5**), LEVER HANDLE SCREW (**3**) and tighten.

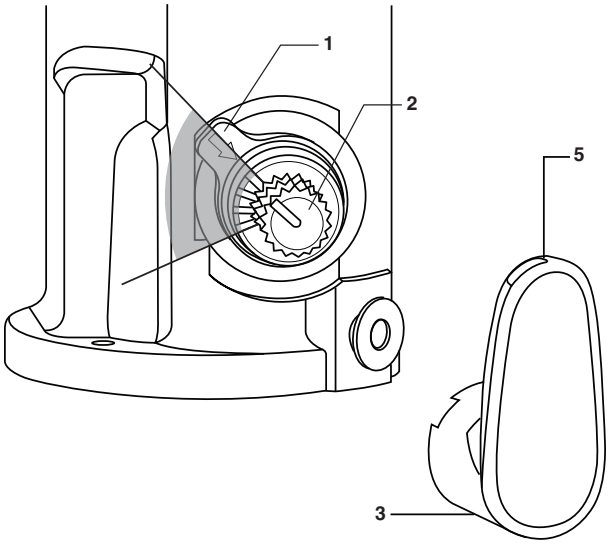

Note: Before removing the handle, preset the desired water temperature and while disassembling make sure to keep the SHAFT EXTENSION (**8**) in place.

1. Unthread Set screw (**3**) and remove handle (**5**).

2. Remove Limit stop (**1**).

3. Using a Slotted screwdriver unthread Screw (**7**) and remove SHAFT extension (**8**).

Note: Hold the extension in place while unthreading the screw.

4. Install Cap (**9**) onto the Body and press until you hear a click.

Note: Sharper side faces towards the back of the body.

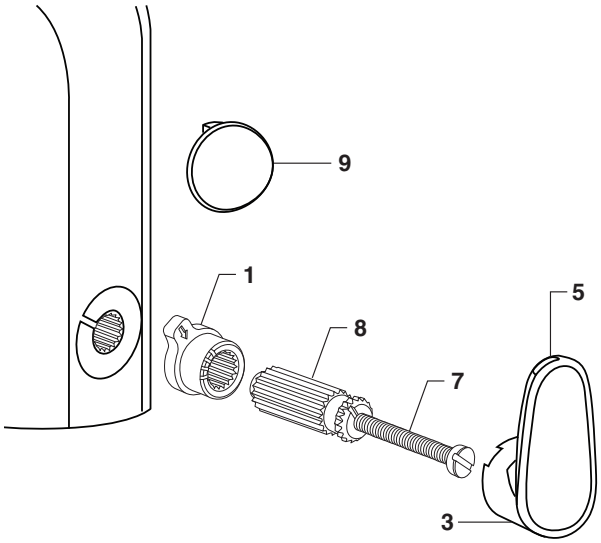

5 HAND WASH SENSOR OPERATION

REMOVE PROTECTIVE FILM FROM SENSOR EYE WHEN INSTALLATION IS COMPLETE.

When the Sensor detects a user, the water immediately starts to flow. Water flow will stop 1.5 seconds after user is out of sensor range. This Comfort delay allows the user to comfortably move their hands without the water turning off.

As a precaution, a Safety Timer will turn off the water, after the sensor has been blocked for 30 seconds. The water will stay off until the blockage is removed from the detection zone.

The Comfort and Safety time settings can be adjusted using the Mobile Application.

Refer to the Quick Start Guide to complete setting up the Faucet functionality.

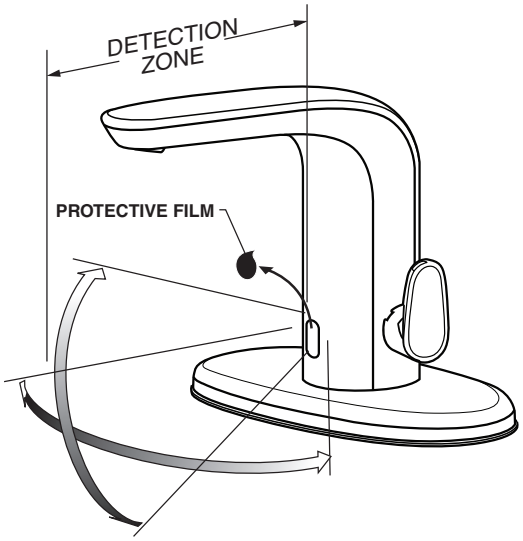

MAINTENANCE

1 REPLACE BATTERY

1. Remove control box cover by unthreading SCREW (**3**).
2. Disconnect Battery (**1**) from WIRE (**2**).
3. Connect the new battery to WIRE (**2**).
4. Check that the new battery is successfully activating the faucet.
5. Cover control box with the cover and SCREW (**3**).

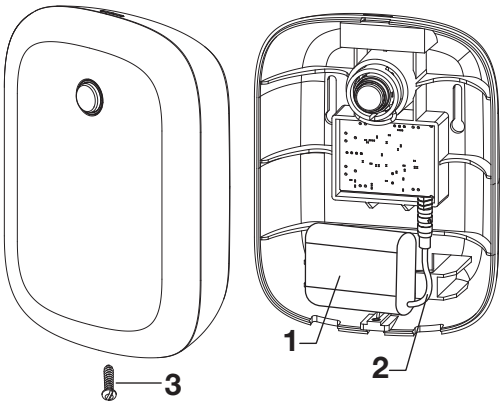

2 REPLACE BACK-UP BATTERY KIT FOR AC VERSION

1. Remove old back-up battery by disconnecting the two wires.
2. Install new kit by connecting it to the two wires.

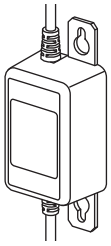

3 ADJUST OR REPLACE MAXIMUM OUTLET TEMPERATURE

1. With the COVER off, the installer can reduce the maximum mixed water temperature by turning the THERMO VALVE (**4**) clockwise with a screwdriver.
2. Remove SCREW (**6**) and unthread THERMO VALVE (**4**). Replace with new THERMO VALVE (**4**).

WARNING

- **Do not turn the THERMO VALVE (4) More than 1 turn.**
- **The maximum mixed water temperature can not be increased due to ASSE 1070 requirements.**

4 GENERAL CLEANING

1. Only use a damp, soft cloth to clean the spout and the sensor.
2. For tougher dirt, use a soft cloth with diluted dish washing detergent. Wipe the area using a wet cloth and dry using a soft cloth.

CAUTION

Do not scratch the sensor when cleaning. Avoid using any abrasives or harsh detergents or chemicals.

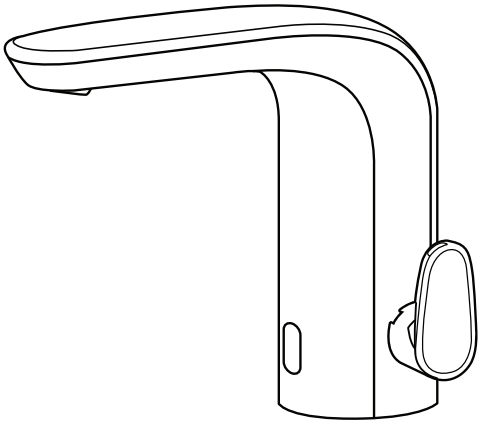

5 SET DETECTION RANGE (IF REQUIRED)

1. Once the device is paired, you may edit the settings by navigating to Device Management screen and finding the DEVICE CARD (**1**). You must be in Bluetooth range to the device.
2. Press on the DEVICE CARD (**1**) and scroll down to find the CONNECT (**2**) button.
3. Once the app connects to the device, a "Settings" button will be available.
4. Enter the Settings screen and adjust IR sensor distance as needed and press "Apply"

Comfort Time should not be modified unless specified in the by manufacturer.

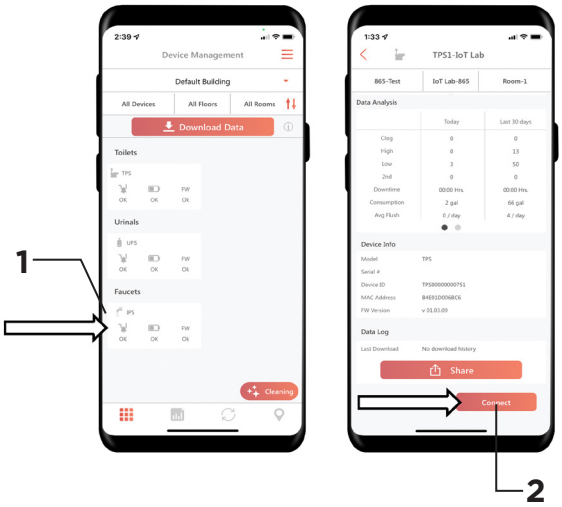

TROUBLE SHOOTING GUIDE FOR FAUCET

PROBLEM	POSSIBLE CAUSE	CORRECTIVE ACTION
Faucet will not operate.	Supply valve is closed.	Open supply valve.
	Battery/The electric wire(s) is not connected.	Connect the wires.
	Sensor lens is dirty.	Clean lens.
	Reflective surface in front of sensor.	Remove the reflective surface from in front of the sensor.
	Detection range not adjusted properly.	Adjust the detection range.
	The infrared sensor or the actuator is out of order.	Contact distributor for replacement.
	Battery is critical.	Press button on the control box for 3-5 seconds. If LED does not blink blue, the battery is critically low and needs to be replaced.
	Faucet Valve Electronic is faulty.	Replace Faucet Valve Electronic.
	No power provided by battery/ power supply.	Replace battery/power supply.
Faucet valve does not activate when User presence.	Sensor does not recognize a user.	Using the DetectLnk™ app, enter the device settings and adjust IR Distance.
	Battery/Power Supply is disrupted.	Verify connection to sensor.
		Check available voltage where Battery/ Power supply is connected with sesnor with DC voltmeter. 5.8 to 6.5 VDC is required.
Faucet is running too long or not shutting off.	Solenoid may be stuck open.	Press the control box button for at least 3-5 sec. If the LED starts blinking blue, but the water does not stop, the Solenoid needs to be replaced. If the LED does not blink blue and water does not stop, the Battery needs to be replaced.
	Battery/Power Supply is disrupted.	Verify connection to sensor.
		Check available voltage where Battery/ Power supply is connected with sesnor with DC voltmeter. 5.8 to 6.5 VDC is required.
Flush is not considered quiet.	Piping system is source of noise.	High pressure in the system can sometimes be controlled by the stop valve. Other sources of noise may be the absence of air chamber and shock arrestors, loose pipes, improper size pipes, etc. In these cases the building engineer should be consulted.
Faucet “ghost” activations or activates randomly with no user present.	Sensor lens is dirty.	Clean lens.
	Sensor is detecting reflections.	Using the DetectLnk™ app, enter the device settings and adjust IR Distance.
Running low flow issues.	EXTERNAL SUPPLY STOPS are partially closed.	Fully open external supply stops by turning counter clockwise.
	Check for blockage.	Inspect flow sensor assembly, aerator and solenoid valve. Remove, clean and insert back to original position. NOTE: Aerator must only be serviced with appropriate American Standard repair parts.

TROUBLE SHOOTING GUIDE FOR FAUCET CONT'D

PROBLEM	POSSIBLE CAUSE	CORRECTIVE ACTION
Device is not communicating.	Device lost power.	Double check power connections and supply. If using AC version, check backup battery & replace.
	Multi AC power cable was not connected.	Ensure that cable is securely connected.
	Sensor not advertising.	Press Button for 3 second, then Blue LED stats blinking, connect through DetectLnk™ app.

Have a question or need help on install?

For questions or help on installation call us at **855-815-0004.**

APPENDIX A

Supplier's Declaration of Conformity
47 CFR § 2.1077 Compliance Information

Unique Identifier: IoT DetectInk NextGen and 775B405 / 775B505 / 775B60

Responsible Party : AS America, Inc. d/b/a LIXIL Americas

Address :

AS America, Inc. d/b/a LIXIL Americas

865 Centennial Ave.

Piscataway, New Jersey 08854

www.americanstandard.com | www.dxv.com | www.grohe.com/us | lixil.com

FCC Compliance Statement : According to FCC Part 15

This equipment has been tested and found to comply with the limits for a Class B digital device, pursuant to part 15 of the FCC Rules. These limits are designed to provide reasonable protection against harmful interference in a residential installation. This equipment generates, uses and can radiate radio frequency energy and, if not installed and used in accordance with the instructions, may cause harmful interference to radio communications. However, there is no guarantee that interference will not occur in a particular installation. If this equipment does cause harmful interference to radio or television reception, which can be determined by turning the equipment off and on, the user is encouraged to try to correct the interference by one or more of the following measures:

— Reorient or relocate the receiving antenna.

— Increase the separation between the equipment and receiver.

— Connect the equipment into an outlet on a circuit different from that to which the receiver is connected.

— Consult the dealer or an experienced radio/TV technician for help.

— The equipment complies with the safety requirements for RF exposure for mobile (>20 cm) use conditions in accordance with FCC rule part 2.1091.

This device contains licence-exempt transmitter(s)/receiver(s) that comply with Innovation, Science and Economic Development Canada's licence-exempt RSS(s). Operation is subject to the following two conditions:

1. This device may not cause interference.

2. This device must accept any interference, including interference that may cause undesired operation of the device.

3. The equipment complies with the safety requirements for RF exposure in accordance with RSS-102 Issue 5 section 2.5.2 for mobile (>20 cm) use conditions.

L'émetteur/récepteur exempt de licence contenu dans le présent appareil est conforme aux CNR d'Innovation, Sciences et Développement économique Canada applicables aux appareils radio exempts de licence. L'exploitation est autorisée aux deux conditions suivantes :

1. L'appareil ne doit pas produire de brouillage;

2. L'appareil doit accepter tout brouillage radioélectrique subi, même si le brouillage est susceptible d'en compromettre le fonctionnement.

3. L'équipement est conforme aux exigences de sécurité pour l'exposition aux RF conformément à la norme RSS-102 Édition 5 section 2.5.2 pour les conditions d'utilisation mobiles (>20 cm).

TELL US WHAT YOU THINK!

Please leave us a product review or story at **AmericanStandard.com/reviews**

Find installation videos at
youtube.com/americanstandard

Register your warranty and sign up for an idea-filled newsletter at
AmericanStandard-us.com/support/warranty

PLEASE COMPLETE AMERICAN STANDARD WARRANTY REGISTRATION PROCESS AND SAVE THIS WARRANTY INFORMATION IMPORTANT:
Registration of the sink must be completed for this warranty to become effective. Your registration will make it easier to contact you in the event of a product recall.*

INSTRUCTIONS: Register your sink at www.americanstandard.com. Please save your proof of purchase (sale receipt). If you need assistance or do not have access to our website, please contact American Standard Customer Care at: (800) 442-1902. An American Standard representative will assist in completing the warranty registration.

*In California, your warranty rights remain intact even if you do not complete the registration process.

SHARE YOUR NEW PRODUCT!

Tag us @american_standard on Instagram and show us how your new product looks.

WANT MORE INFO?

For questions or help call us at **855-815-0004, or visit AmericanStandard.com**

UNITED STATES
American Standard Brands
865 Centennial Ave.
Piscataway, New Jersey 08854
Attention: Director of Customer Care
For residents of the United States, warrantyinformation may also be obtained by calling the following toll free number: (855) 815-0004
www.AmericanStandard.com

CANADA
LIXIL Canada, Inc.
5900 Avebury Rd.
Mississauga, Ontario
Canada L5R 3M3
Toll Free: (800) 387-0369
AmericanStandard.ca/support/warranty

MEXICO
American Standard B&K Mexico
S. de R.L. de C.V.
Via Morelos #330
Col. Santa Clara
Ecatepec 55540 Edo. Mexico
Toll Free: 800-839-1200
AmericanStandard.com.mx/garantia

M985163 EN (7/23)
775B405/775B505/775B605

PART OF LIXIL

American Standard
DetectLnk