WG233 802.11 a/b/g/n/ac 2T2R USB WiFi Module Datasheet

WIFI module
Model: WG233

Document Information		
Title	WG233 802.11 a/b/g/n/ac 2T2R USB WiFi Module Datasheet	
Document type	Datasheet	
Document number	SL-19050128	
Revision and date	V1.01	20-May -2019
Disclosure restriction	Public	

Revision History

Revision	Description	Approved	Date
V1.01	Initial Release	George He	2019.05.20

SKYLAB reserves all rights to this document and the information contained herein. Products, names, logos and designs described herein may in whole or in part be subject to intellectual property rights. Reproduction, use, modification or disclosure to third parties of this document or any part thereof without the express permission of SKYLAB is strictly prohibited.

The information contained herein is provided “as is” and SKYLAB assumes no liability for the use of the information. No warranty, either express or implied, is given, including but not limited, with respect to the accuracy, correctness, reliability and fitness for a particular purpose of the information. This document may be revised by SKYLAB at any time. For most recent documents, visit www.skylab.com.cn.

Copyright © 2019, Skylab M&C Technology Co., Ltd.

SKYLAB® is a registered trademark of Skylab M&C Technology Co., Ltd in China

Contents

1. General Description....4

2. Applications....4

3. Applications....5

4. Application Block Diagram....5

5. Module Pinout and Pin Description....6

6. Performance Specification....6

7. Module Pinout....8

8. Electrical Characteristics....9

9. PCB Footprint and Dimensions....10

10. Manufacturing Process Recommendations....11

11. Reference Design Schematic....12

12. Packaging Specification....13

12. Contact Information....13

1. General Description

WG233 is a highly integrated USB Wi-Fi module which supports 867Mbps PHY rate. It is compliant with IEEE 802.11ac draft specification, offering feature-rich wireless connectivity and reliable throughput from an extended distance.

WG233 is designed to support standard based features in the areas of security, quality of service and international regulations, giving end users the greatest performance any time and in any circumstance.

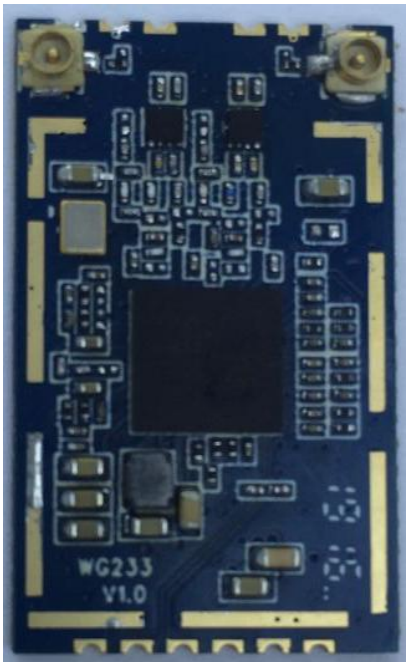

Figure 1: WG233 Top View

2. Applications

◆IP Camera

◆IP TV

◆IP DVD(Internet VOD Player)

◆Set Top Box

◆Home Gateways

◆Gaming Consoles

◆DVR

3. Applications

◆IEEE 802.11a/b/g/n/ac WLANs

◆2.4G /5G 2T2R mode

◆With support of 867Mbps PHY rate

◆IEEE 802.11e QoS Enhancement(WLAN)

◆USB LPM/Selective Suspend support

◆Fully compliance with USB2.0 High-speed mode.

◆IEEE 802.11i(WPA, WPA2). Open, shared key, and pair-wise key authentication services

◆Supports for Windows XP 32/64, 2000, Vista 32/64bit, Windows 7 32/64bit, Linux, Android

◆RoHS compliance meets nvironment-friendly requirement.

◆FCC,CE compliance

◆29.0(L) x 17.0(W) x 2.8mm small dimension.

4. Application Block Diagram

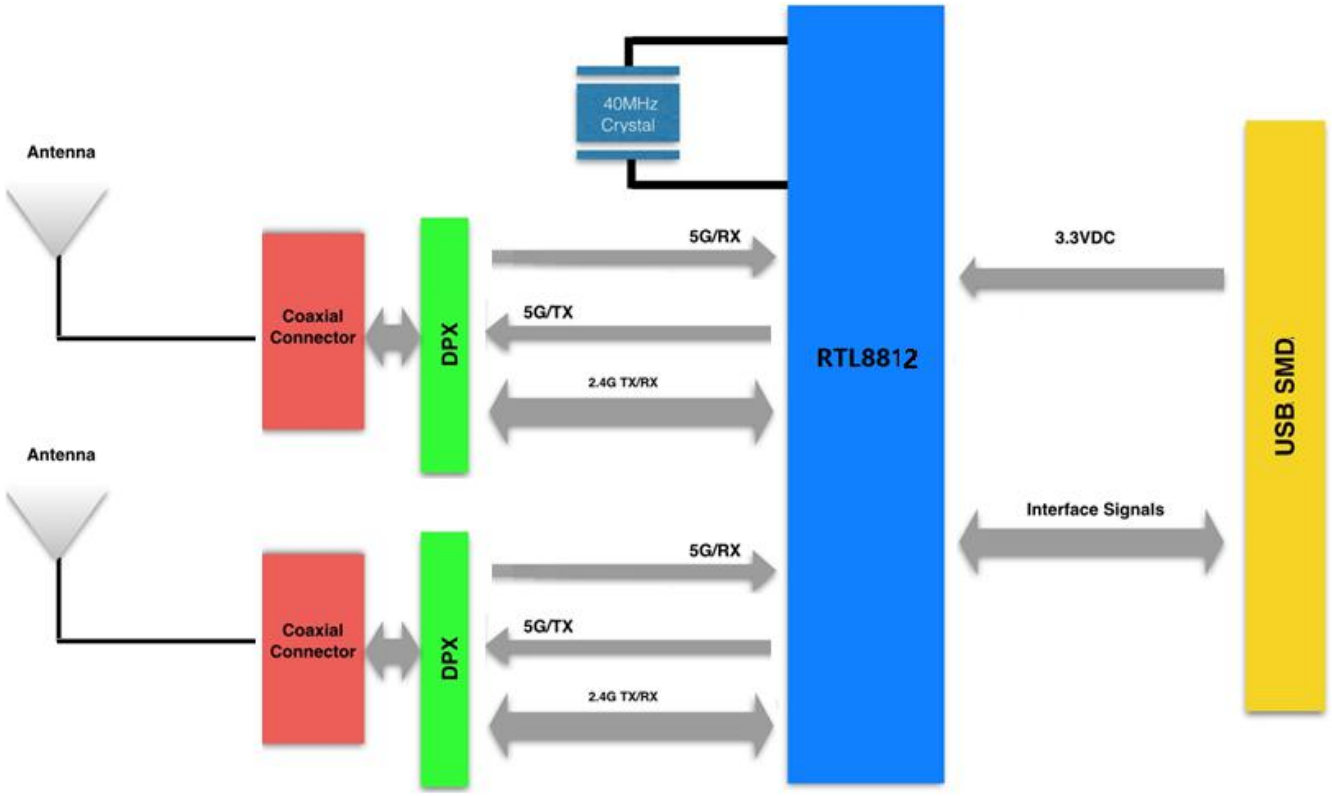

Figure 2: WG233 Block Diagram

5. Module Pinout and Pin Description

Module NO.	RF Connector Type	Antenna Option
WG233E	IPEX Connector	Ext Antenna
WG233P	PCB PIN	Ext Antenna

6. Performance Specification

Hardware Features	
Model	WG233
ANTENNA TYPE	IPEX connecter or PCB antenna
Voltage	3.0—3.6V
DIMENTIONS(W×D)	29mm*19mm*2.8mm
Wireless Features	
WIRELESS STANDARDS	IEEE 802.11 a/b/g/n/ac
FREQUENCY RANGE	2.4/5GHz
DATA RATES	IEEE 802.11a Standard Mode: 6,9,12,18,24,36,48,54Mbps IEEE 802.11 b Standard Mode: 1,2,5.5,11Mbps
	IEEE 802.11g Standard Mode: 6,9,12,18,24,36,48,54Mbps
	IEEE 802.11n/Draft 2.0 Mode: 150Mbps @ HT40
	IEEE 802.11ac Standard Mode: 433Mbps @VHT80
2.4G RECEIVE SENSITIVITY	HT40 MCS15: -69dBm@10% PER(MCS7)
	HT20 MCS15 : -72dBm@10% PER(MCS7)

	54M: -74dBm@10% PER
	11M: -89dBm@ 8% PER
5G RECEIVE SENSITIVITY	VHT80 MCS15: -59dBm@10% PER(MCS9)
	HT40 MCS15: -68dBm@10% PER(MCS7)
	OFDM 54M: -75dBm@10% PER
	OFDM 6M: -90dBm@ 8% PER
MODULATION TECHNOLOGY	802.11 Legacy b/g/n
	DSSS (DBPSK, DQPSK, CCK)
	OFDM (BPSK, QPSK, 16-QAM, 64-QAM)
	802.11ac
	OFDM (256-QAM)
WIRELESS SECURITY	Supports WEP64/128, WPA, WPA2, TKIP, WAPI, and AES hardware encryption
5GHZ TRANSMIT POWER	IEEE 802.11ac: 9-13dBm @AC80 MCS7
2.4GHZ TRANSMIT POWER	IEEE 802.11n: 14-17dBm @HT40 MCS7 14-17dBm@HT20 MCS7
	IEEE 802.11g: 15-17dBm
	IEEE 802.11b: 16-20dBm
WORK MODE	AP/Ad-Hoc / Infrastructure mode

Others

	Status	POWER	2.4G/mA	5G/mA
POWER Consumption@25°C	Transmission HT40/MCS 7	3.3V	300	350
	Receiving VHT80/MCS15	3.3V	90	90

SYSTEM REQUIREMENTS	Windows 7(32/64bits), Windows Vista(32/64bits), Windows XP(32/64bits), Windows 2000,Linux,Android
ENVIRONMENT	Operating Temperature: -10℃~70℃
	Storage Temperature: -40℃~125℃
	Operating Humidity: 10%~90% non-condensing
	Storage Humidity: 5%~90% non-condensing

7. Module Pinout

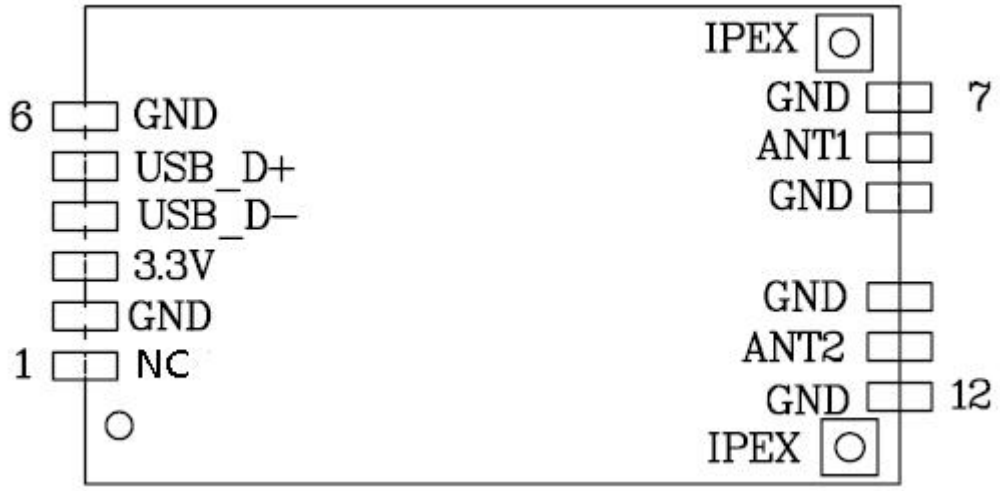

Figure 3: WG233 Pin Name

8. Electrical Characteristics

Pin No.	Pin name	I/O	Description	Remark
1	NC		NC	
2	GND	G	Ground	
3	3.3V	P	Module Power Supply	
4	USB_D-	I/O	USB Interface DM	
5	USB_D+	I/O	USB Interface DP	
6	GND	G	Ground	
7	GND	G	Ground	
8	ANT1	RF	Antenna1	50 OHM
9	GND	G	Ground	
10	GND	G	Ground	
11	ANT2	RF	Antenna2	50 OHM
12	GND	G	Ground	

9. PCB Footprint and Dimensions

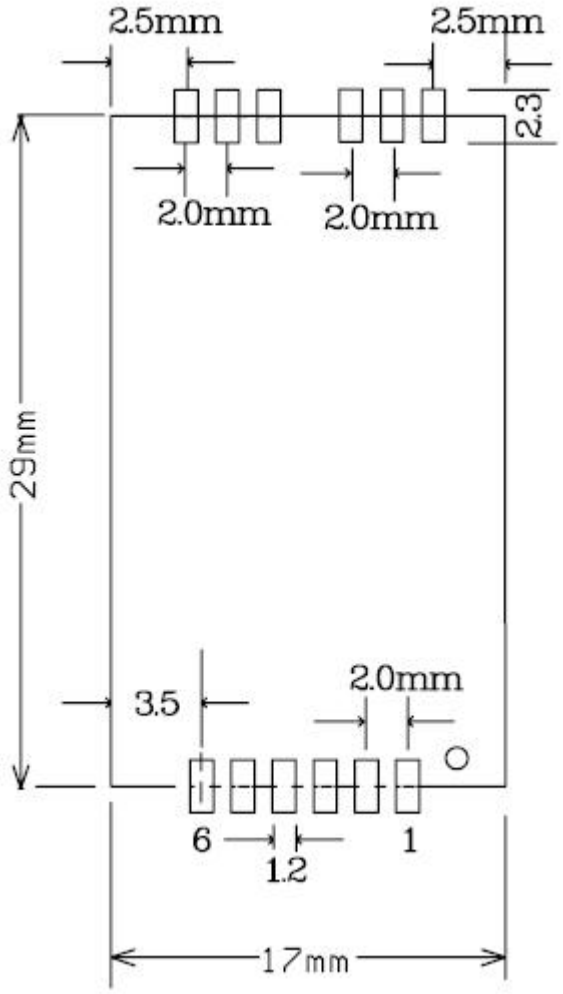

Figure 4: WG233 Dimensions

10. Manufacturing Process Recommendations

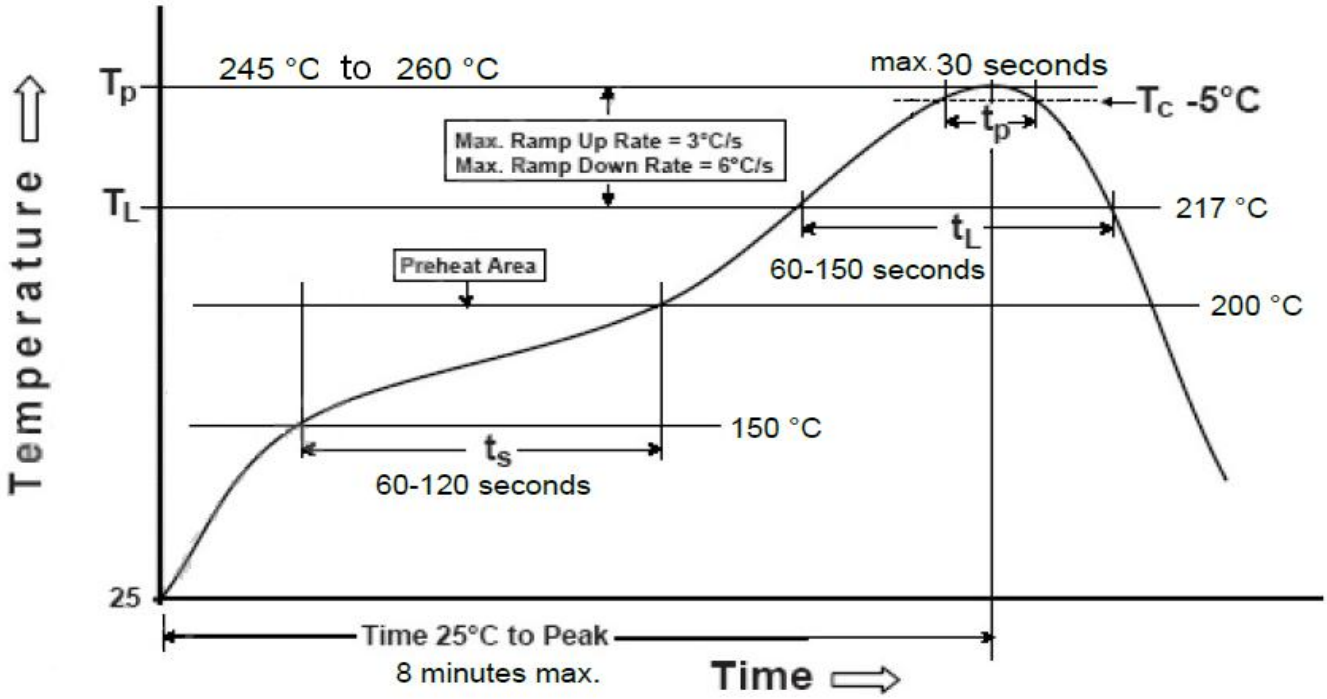

Figure 5: WG233 Typical Leadfree Soldering Profile

Note：The final soldering temperature chosen at the factory depends on additional external factors like choice of soldering paste，size，thickness and properties of the baseboard，etc. Exceeding the maximum soldering temperature in the recommended soldering profile may permanently damage the module.

11. Reference Design Schematic

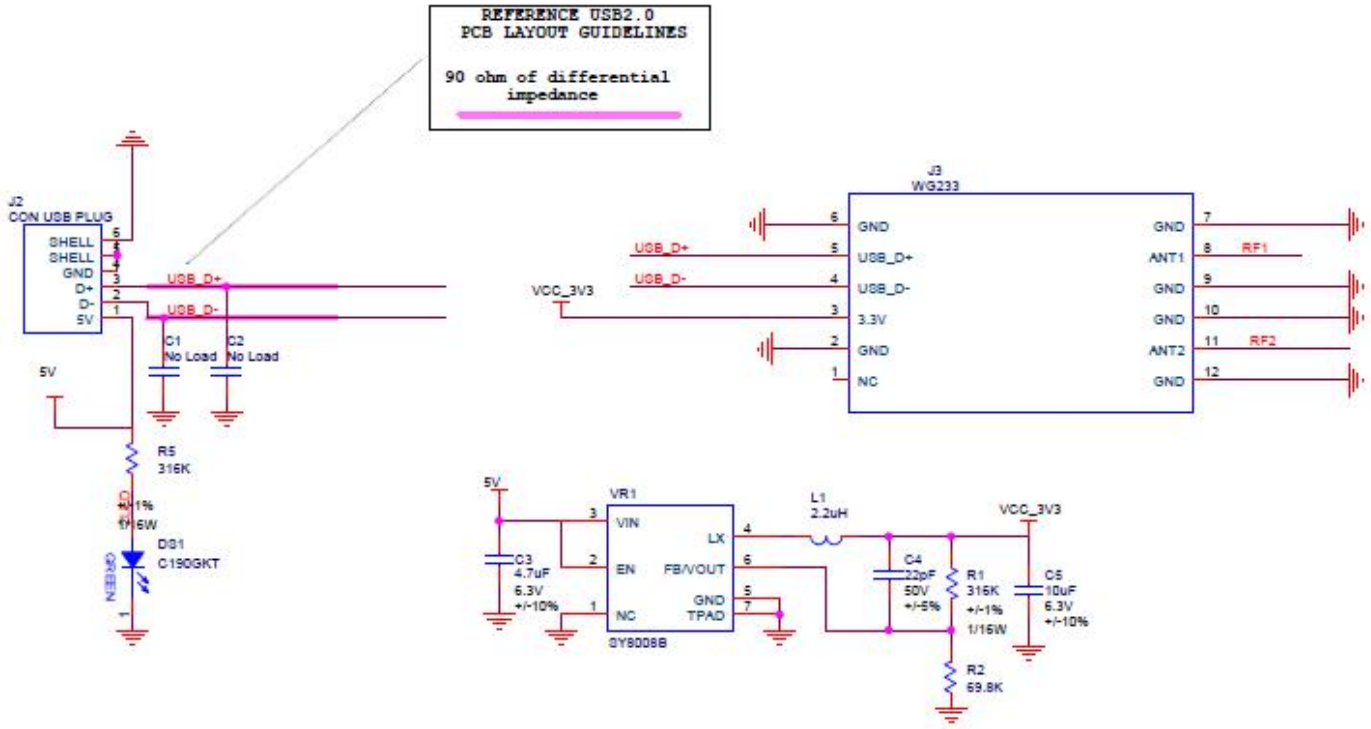

Figure 6: WG233 schematic application

12. Packaging Specification

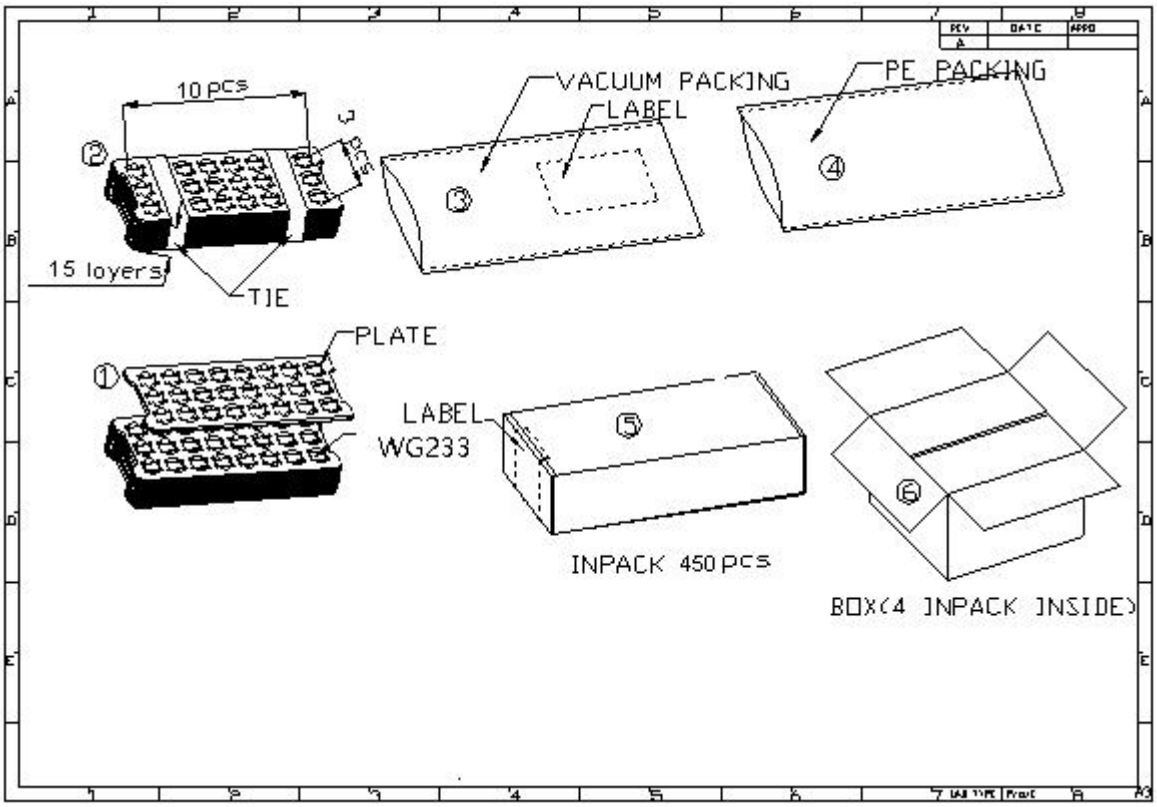

Figure 7: WG233 Packaging Specification

12. Contact Information

Skylab M&C Technology Co., Ltd.

深圳市天工测控技术有限公司

Address: 6Floor, No.9 Building, Lijincheng Scientific & Technical park, Gongye East Road,

Longhua District, Shenzhen, Guangdong, China

Phone: 86-755 8340 8210（Sales Support）

Phone: 86-755 8340 8510（Technical Support）

Fax: 86-755-8340 8560

E-Mail: technicalsupport@skylab.com.cn

Website: www.skylab.com.cn www.skylabmodule.com

FCC Statement

FCC standards: FCC CFR Title 47 Part 15 Subpart C Section 15.247 and FCC CFR Title 47 Part 15 Subpart E Section 15.407

External Antenna（IPEX connector） with antenna gain 2dBi，and External Antenna (PCB PIN) with antenna gain 1.5dBi

We will retain control over the final installation of the modular such that compliance of the end product is assured. In such cases, an operating condition on the limit modular approval for the module must be only approved for use when installed in devices produced by a specific manufacturer. If any hardware modify or RF control software modify will be made by host manufacturer,C2PC or new certificate should be apply to get approval,if those change and modification made by host manufacturer not expressly approved by the party responsible for compliance ,then it is illegal.

FCC Radiation Exposure Statement

The modular can be installed or integrated in mobile or fix devices only. This modular cannot be installed in any portable device. This modular complies with FCC RF radiation exposure limits set forth for an uncontrolled environment. This transmitter must not be co-located or operating in conjunction with any other antenna or transmitter. This modular must be installed and operated with a minimum distance of 20 cm between the radiator and user body.

If the FCC identification number is not visible when the module is installed inside another device, then the outside of the device into which the module is installed must also display a label referring to the enclosed module. This exterior label can use wording such as the following: “Contains Transmitter Module FCC ID: 2ACOE-WG233 Or Contains FCC ID: 2ACOE-WG233 ”

OEM INTEGRATION INSTRUCTIONS:

This device is intended only for OEM integrator under the following conditions:

The module must be installed in the host equipment such that 20 cm is maintained between the antenna and users, and the transmitter module may not be co-located with any other transmitter or antenna. The module shall be only used with the internal on-board antenna that has been originally tested and certified with this module. External antennas are not supported. As long as these 3 conditions above are met, further transmitter test will not be required.

However, the OEM integrator is still responsible for testing their end-product for any additional compliance requirements required with this module installed (for example, digital device emissions, PC peripheral requirements, etc.). The end-product may need Verification testing, Declaration of Conformity testing, a Permissive Class II Change or new Certification. Please involve a FCC certification specialist in order to determine what will be exactly applicable for the end-product.

Validity of using the module certification:

In the event that these conditions cannot be met (for example certain laptop configurations or co-location with another transmitter), then the FCC authorization for this module in combination with the host equipment is no longer considered valid and the FCC ID of the module cannot be used on the final product. In these circumstances, the OEM integrator will be responsible for re-evaluating the end product (including the transmitter) and obtaining a separate FCC authorization. In such cases, please involve a FCC certification specialist in order to determine if a Permissive Class II Change or new Certification is required.

Upgrade Firmware:
The software provided for firmware upgrade will not be capable to affect any RF parameters as certified for the FCC for this module, in order to prevent compliance issues.

End product labeling:
This transmitter module is authorized only for use in device where the antenna may be installed such that 20 cm may be maintained between the antenna and users. The final end product must be labeled in a visible area with the following: “Contains 2ACOE-WG233”.

Information that must be placed in the end user manual:

The OEM integrator has to be aware not to provide information to the end user regarding how to install or remove this RF module in the user's manual of the end product which integrates this module. The end user manual shall include all required regulatory information/warning as show in this manual.

When the module is installed inside another device, the user manual of the host must contain below warning statements;
1. This device complies with part 15 of the FCC Rules. Operation is subject to the following two conditions:
(1) This device may not cause harmful interference, and
(2) (2) this device must accept any interference received, including interference that may cause undesired operation.
Any Changes or modifications not expressly approved by the party responsible for compliance could void the user's authority to operate the equipment.
Note: This equipment has been tested and found to comply with the limits for a Class B digital device, pursuant to part15 of the FCC Rules. These limits are designed to provide reasonable protection against harmful interference in a residential installation. This equipment generates, uses and can radiate radio frequency energy and, if not installed and used in accordance with the instructions, may cause harmful interference to radio communications. However, there is
no guarantee that interference will not occur in a particular installation. If this equipment does cause harmful interference to radio or television reception, which can be determined by turning the equipment off and on, the user is encouraged to try to correct the interference by one or more of the following measures:
—Reorient or relocate the receiving antenna.
—Increase the separation between the equipment and receiver.
—Connect the equipment into an outlet on a circuit different from that to which the receiver is connected.
—Consult the dealer or an experienced radio/TV technician for help.
2. Changes or modifications not expressly approved by the party responsible for compliance could void the user's authority to operate the equipment.
The devices must be installed and used in strict accordance with the manufacturer's instructions as described in the user documentation that comes with the product.
Any company of the host device which install this modular with limit modular approval should perform the test of radiated & conducted emission and spurious emission,etc. according to FCC CFR Part 15 E: 15.407 and 15.207, FCC part 15C : 15.247 and 15.209 &15.207 ,15B Class B requirement, Only if the test result comply with FCC CFR Part 15 E: 15.407 and 15.207, FCC part 15C : 15.247 and 15.209 &15.207 ,15B Class B requirement， then the host can be sold legally.