USER MANUAL

Flic Hub / Flic Hub LR

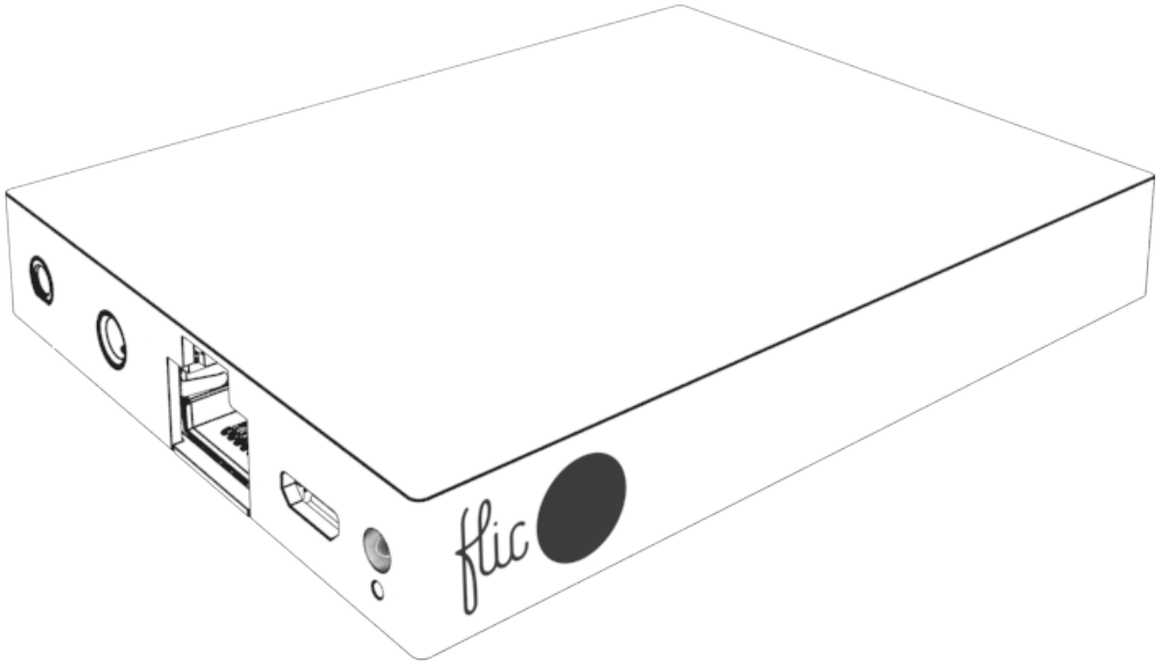

English

GETTING STARTED

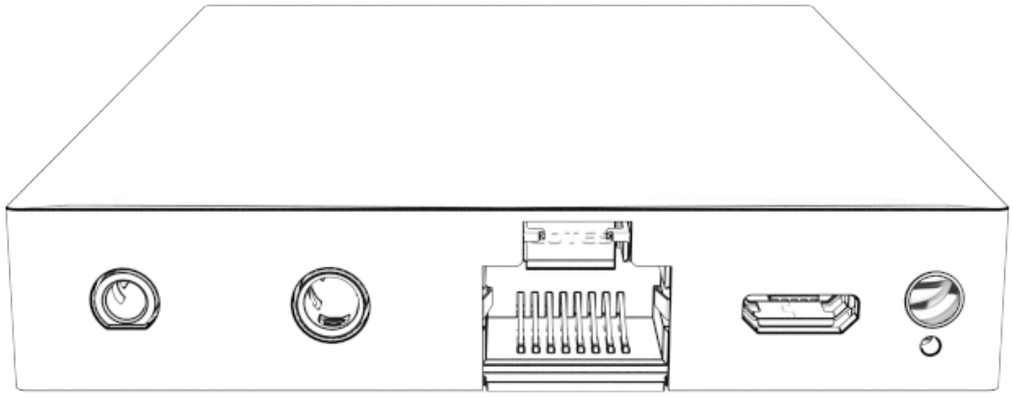

To get started make sure that you have:

1. An active internet connection (Wifi or Ethernet)
2. A phone with the Flic app installed
3. A Flic button within Bluetooth range of the Hub

The phone is only necessary during the setup process.
Once the Hub and Flic are connected you no longer need the phone app to be running to enjoy Flic!

POWER

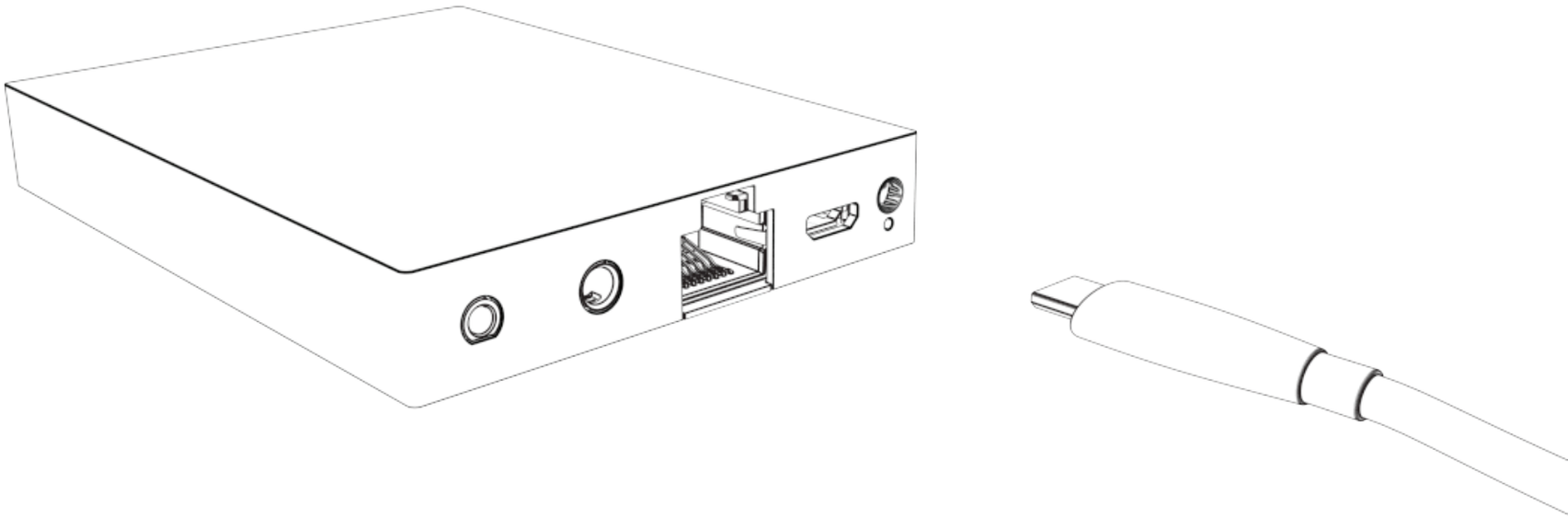

Connect the Micro USB cable to the Hub and an external power adapter. The Hub will now turn on, indicated by a bright red LED.

After approximately 60 seconds the LED will dim, indicating that it can now be found using the Flic App on your phone. Follow the setup and start connecting your Flic buttons.

We recommend that you use an adapter can supply the Hub with at least 1A. If using an adaptor with less than the recommended current rating you may experience unstable behaviour.

If using the IR you must ensure that you have a 1A current supply.

INTERNET CONNECTION

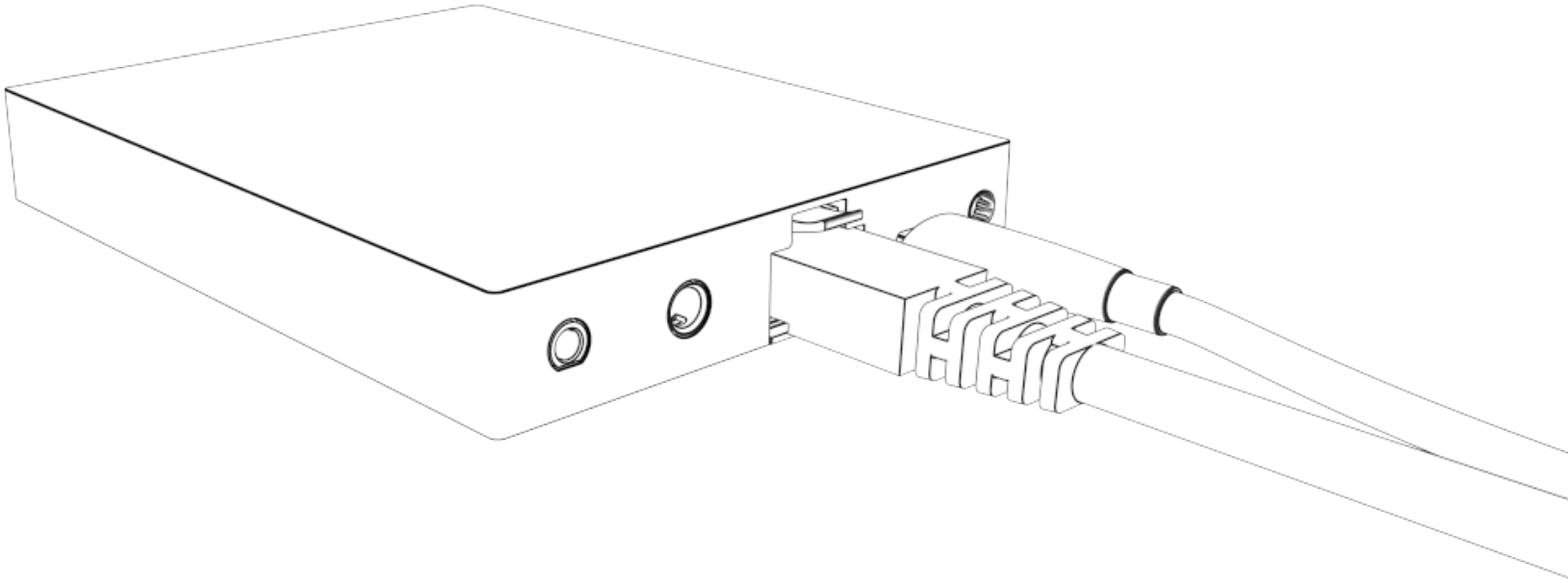

To connect the Hub to your Wifi network open the Flic App and follow the setup steps to get the Hub connected to the internet.

Alternatively you can simply connect the Hub, via an ethernet cable, directly into your home router/network.

If the Hub doesn't have an acitve internet connection you will not be able to connect any Flic buttons.
To check if the internet connection for the Hub is active you should open the Hub settings page. Look for the ***network settings*** section and press ***test.***

PAIRING YOUR FLIC BUTTONS

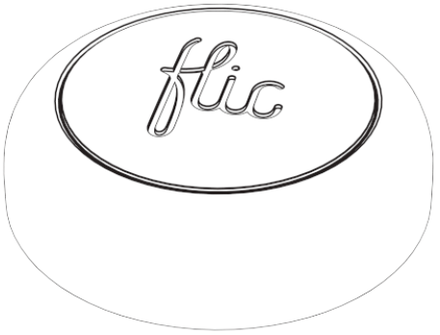

If you are pairing a brand new Flic button to the Hub for the first time then simply tap the '+' button in the bottom right corner of the Hub app page. You will be prompted to press the Flic button and the pairing should take a few seconds.

Alternatively, if you are pairing a Flic button that was previously paired to another device or Hub then you will need to remove it from that device first. You can do this by tapping the gear (settings) icon and selecting the 'Remove' option. You can now pair this button as described above.

Remember that you must have an active internet connection to pair!

INFRARED ACCESSORY

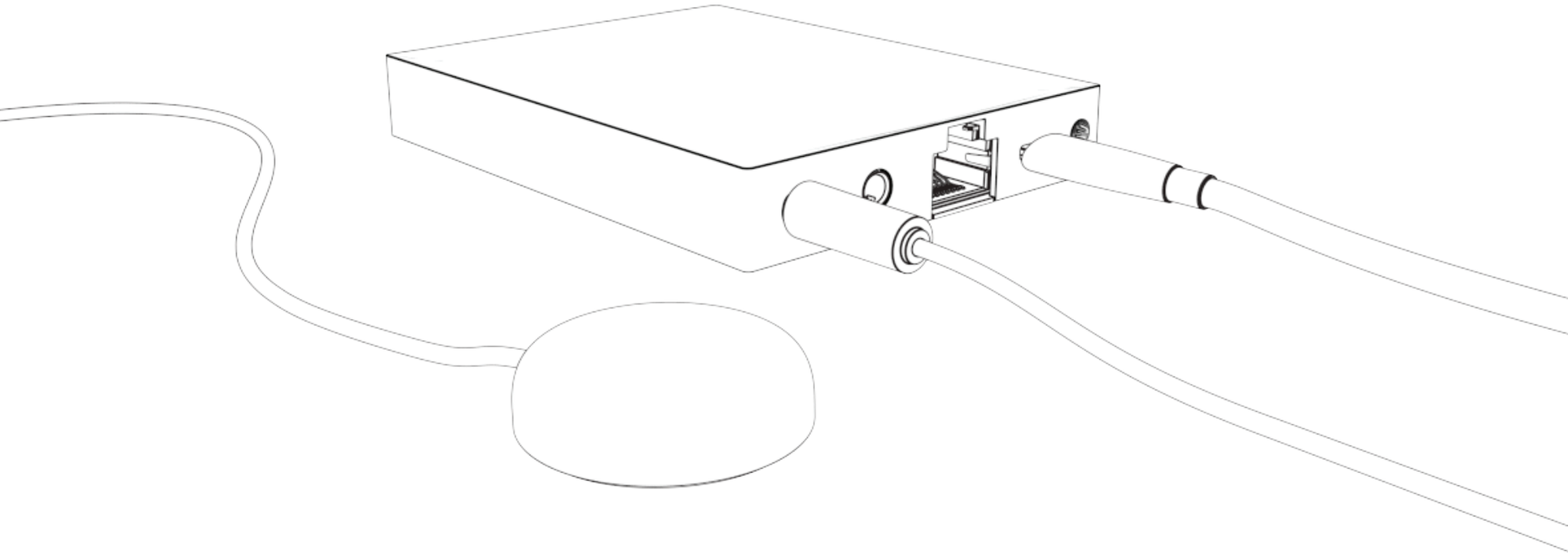

Connect your Flic IR accessory to the Hub via the 2.5mm connector and place the IR blaster in general the direction of the recieving device(s).

The range of the IR is ~10m. For best results ensure clear line of sight between IR accessory and recieving device.

To setup your first action simply select the IR Blaster action within the Flic app. Follow the in app instructions to start recording IR signals from all your remotes!

INFRARED ACCESSORY

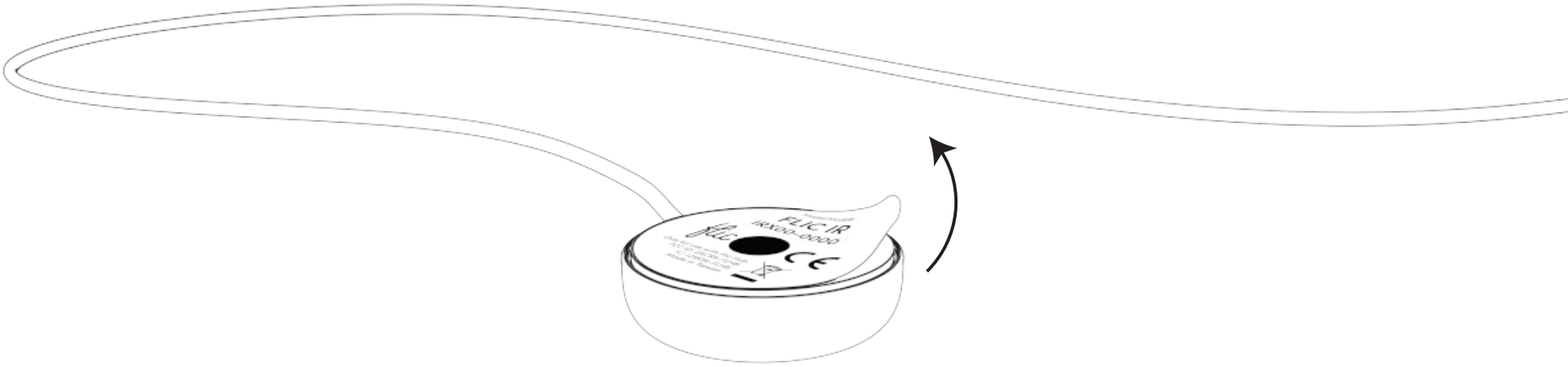

The Flic IR accessory uses the same reusable adhesive as the Flic button. Once you have all your actions setup you can simply peel away the label and secure the IR blaster in the best location to serve all your devices.

If the adhesive starts to loose its stickiness then you can clean it
- Remove it from the IR base and rinse with water.
- Give it a rub and rinse again.
- Leave it to air-dry and it will return to full stickiness.

Do not apply solvents, chemicals or abrasive cleaning products as this will damage the adhesive.

AUDIO

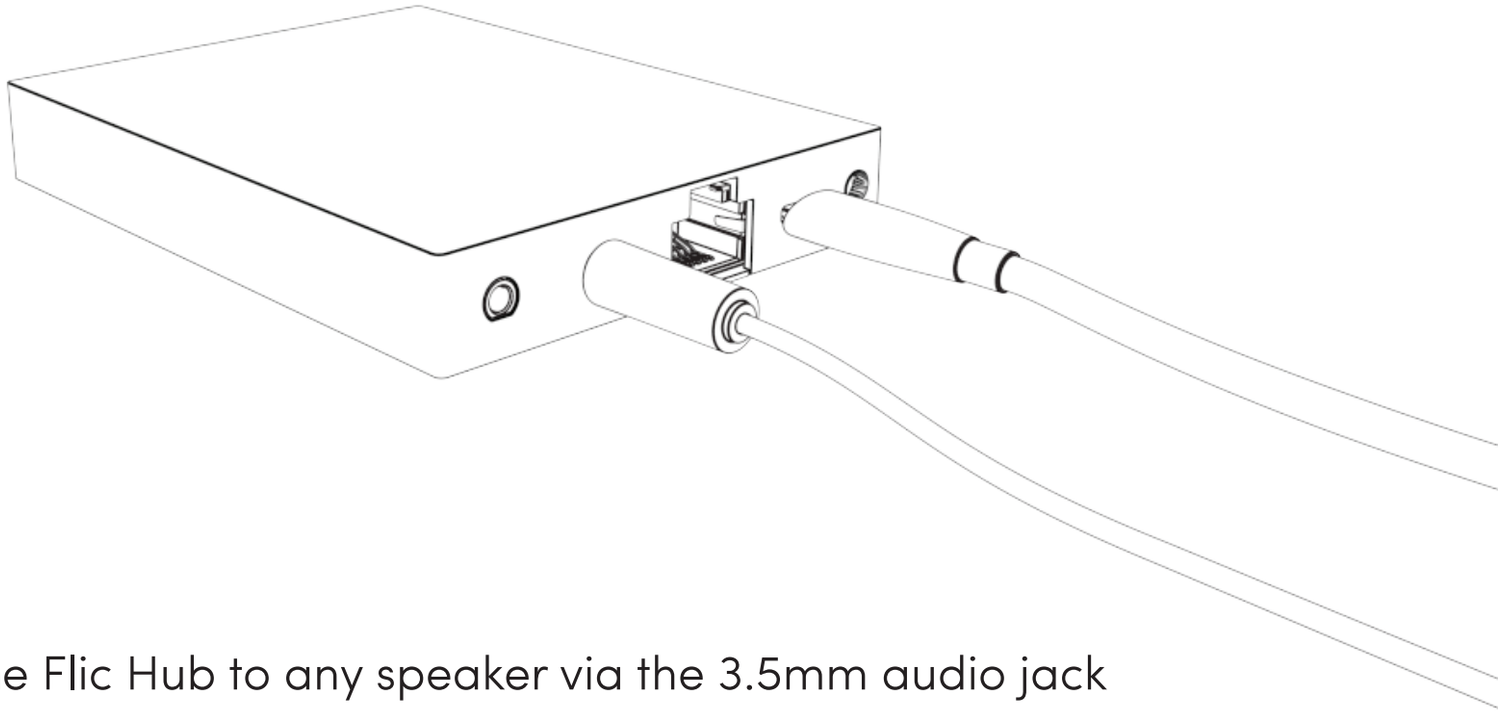

Connect the Flic Hub to any speaker via the 3.5mm audio jack connector.

This allows for the Hub to play a sound as feedback to know that a Flic button has been pressed.

FACTORY RESET

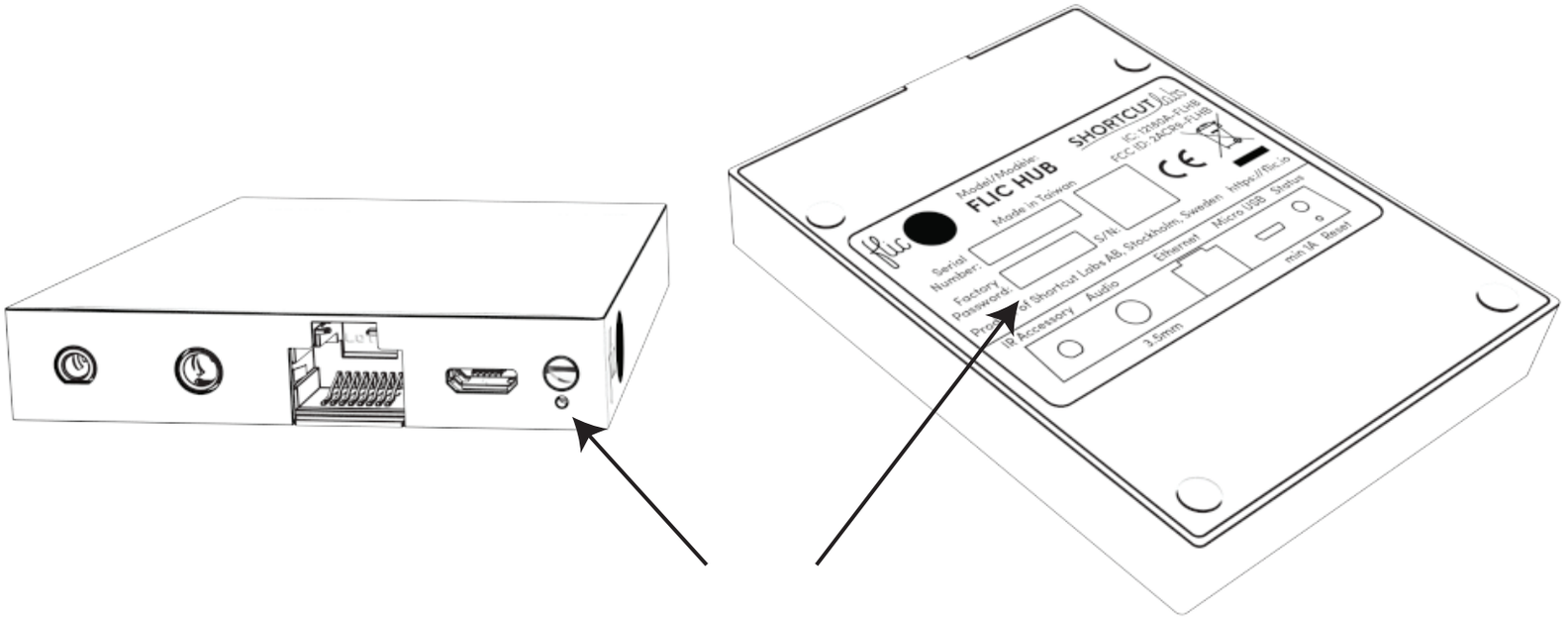

If, for any reason, you must perform a factory reset you need to press the pinhole button for between 10-15 seconds.
All your account settings will be lost and the Hub will return to default.

If you remove the Hub from your account and reconnect to it then you will be prompted to use the *Factory Password* when pairing. This can be found on the label on the underside of your Hub.

Alternatively, if during the intial setup you assign your own Hub password and forget this then you must perform a factory reset to gain access again.

PROBLEMS

If you have any further issues setting up or using your Hub and/or Flic buttons that are not answered here then please read through our full FAQ's.

They can be found at https://start.flic.io/faq

Alternatively you can contact us via the in-app customer support or email us at support@shortcutlabs.com

COMPLIANCE

Shortcut Labs declaration of conformity is available at https://flic.io/doc

For a full compliance list visit https://flic.io/compliance

Flic is certified as FCC, IC, CE, TELEC, WEEE, RoHS, REACH, AUS and R-NZ compliant.

The Flic Hub is certified as FCC, IC, CE, WEEE, RoHS and REACH compliant.

SAFETY USAGE GUIDELINES

The Flic Hub and Flic are not toys. They contain small parts and accessories that present a choking hazard. As such they are not suitable for children or pets.

General

- Do not attempt to service the product.
- Do not use the product in temperatures below –20°C or above +54 °C.
- Clean with a damp cloth only. Do not submerge and do not use chemical or abrasive cleaning products.

Flic specific

- Battery life will be shortened with heavy usage and/or use in extreme conditions.
- Flic is rated as splash proof only – IP44. Do not submerge or attempt to use underwater as this will result in irreversible damage that is outside the scope of the Shortcut Labs AB warranty.

WARRANTY

Shortcut Labs AB warrants that your Flic hardware product ("the product") will be free from defects in materials and workmanship for a period of 24 months from the date of delivery to the original retail purchaser ("the warranty period").

If a defect in the product arises within the warranty period, Shortcut Labs will, at its sole option and subject to applicable laws:
(a)repair or replace it with a new or refurbished product or component; or
(b)refund the original purchase price upon return of the defective product.

This warranty does not apply to products you purchase from unauthorized resellers, or where the instructions for use and activation of the product are not complied with or where the product is damaged as a result of abuse, accident, modification, moisture or other causes beyond our reasonable control.

For detailed warranty information visit:
https://flic.io/documents/warranty-policy

NOTICE

FEDERAL COMMUNICATIONS COMMISSION INTERFERENCE STATEMENT
This equipment has been tested and found to comply with the limits for a Class B digital device, pursuant to part 15 of the FCC Rules. These limits are designed to provide reasonable protection against harmful interference in a residential installation. This equipment generates, uses and can radiate radio frequency energy and, if not installed and used in accordance with the instructions, may cause harmful interference to radio communications. However, there is no guarantee that interference will not occur in a particular installation. If this equipment does cause harmful interference to radio or television reception, which can be determined by turning the equipment off and on, the user is encouraged to try to correct the interference by one or more of the following measures:
-Reorient or relocate the receiving antenna.
-Increase the separation between the equipment and receiver.
-Connect the equipment into an outlet on a circuit different from that to which the receiver is connected.
-Consult the dealer or an experienced radio/ TV technician for help.

CAUTION:
Any changes or modifications not expressly approved by the grantee of this device could void the user's authority to operate the equipment.
This device complies with Part 15 of the FCC Rules. Operation is subject to the following two conditions:
(1) this device may not cause harmful interference, and
(2) this device must accept any interference received, including interference that may cause undesired operation.

RF EXPOSURE WARNING
This equipment must be installed and operated in accordance with provided instructions and the antenna(s) used for this transmitter must be installed to provide a separation distance of at least 20 cm from all persons and must not be co-located or operating in conjunction with any other antenna or transmitter. End-users and installers must be provide with antenna installation instructions and transmitter operating conditions for satisfying RF exposure compliance.

Canada, Industry Canada (IC) Notices
This device complies with Industry Canada's licence-exempt RSSs. Operation is subject to the following two conditions:
(1) This device may not cause interference; and
(2) This device must accept any interference, including interference that may cause undesired operation of the device.

Canada, avis d'Industry Canada (IC)
Le présent appareil est conforme aux CNR d'Industrie Canada applicables aux appareils radio exempts de licence. L'exploitation est autorisée aux deux conditions suivantes :
(1) l'appareil ne doit pas produire de brouillage, et
(2) l'utilisateur de l'appareil doit accepter tout brouillage radioélectrique subi, même si le brouillage est susceptible d'en compromettre le fonctionnement.

Radio Frequency (RF) Exposure Information
The radiated output power of the Wireless Device is below the Industry Canada (IC) radio frequency exposure limits. The Wireless Device should be used in such a manner such that the potential for human contact during normal operation is minimized.
This device has also been evaluated and shown compliant with the IC RF Exposure limits under mobile exposure conditions. (antennas are greater than 20cm from a person's body).

Informations concernant l'exposition aux fréquences radio (RF)
La puissance de sortie émise par l'appareil de sans fil est inférieure à la limite d'exposition aux fréquences radio d'Industry Canada (IC).
Utilisez l'appareil de sans fil de façon à minimiser les contacts humains lors du fonctionnement normal.
Ce périphérique a également été évalué et démontré conforme aux limites d'exposition aux RF d'IC dans des conditions d'exposition à des appareils mobiles (antennes sont supérieures à 20 cm à partir du corps d'une personne).

Join the Flic community!

https://community.flic.io/

Share your ideas with other Flic users and keep up to date with the latest news and happenings from the Flic team.

Shortcut Labs AB, Drottning Kristinas Väg 41, 11428, Stockholm, Sweden