YUNC201-**D**

Product Instruction

Ver. V1.0.2

magic your life

未来科技，梦幻生活

Content

1 Brief Introduction..... 3
2 Technical Features..... 3
3 Size and Appearance..... 4
4 System Block Diagram..... 5
5 Performance Data..... 6
6 Interfaces Information..... 7
7 Development Board..... 7
8 Application Introduction of ARLink-C201-D..... 8
8.1 Airborne Side..... 8
8.1.1 With chip ITE6602..... 8
8.1.2 With conntek CH7038..... 9
8.1.3 With Perceptive Sensor Module..... 9
8.1.4 With embedded Linux platform..... 10
8.2 Controller Side..... 10
8.2.1 C201-D USB0..... 10
8.2.2 C201-D USB1..... 11

1 Brief Introduction

Communication is performed with OFDM modulation on 2.4GHz band with hopping and 5.8G OFDM . The protocol is built on sky/ground architecture, airborne terminal(sky) will hop to the corresponding channel when ground side channel hopping happened. After initiate pairing,the two sides can send and receive data. The ground side can detect RF interference and decide if hop to another channel or not hop to another channel.

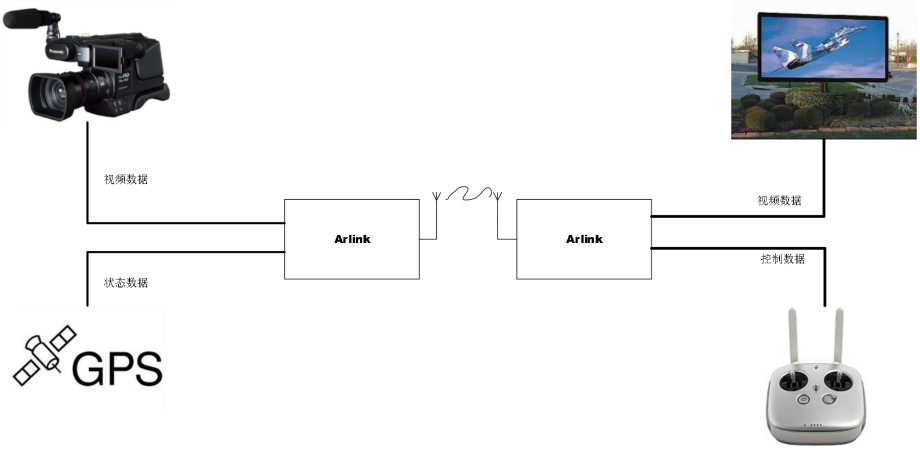

Figure 1 ARLink-C201

2 Technical Features

- Support 2.4G and 5.8G OFDM,2.4G Ground can support FHSS

- The uplink adopts frequency hopping scheme to monitor the in-band interference in real time, automatically select the frequency hopping range, and provide up to 68 random frequency hopping sequences; Downlink according to the current channel interference situation, automatic fast in-band frequency conversion and modulation and coding strategy (MCS).
- Built-in H.264 encoder, using advanced encoder rate control algorithm, and with the

baseband automatic MCS adjustment seamless docking, under the condition of ensuring the image quality, more suitable for wireless link transmission.

- The downlink adopts advanced retransmission mechanism to ensure the integrity of image display, while the end-to-end delay uplink does not adopt retransmission mechanism to ensure the real-time performance of control signal and retransmission request signal.

3 Size and Appearance

Figure 2 ARLink-C201-D

- Size：L*W*H = 36mm*30mm*3.3mm
- 80 Pin Stamp hole packaged, single side PCB
- Shielding cover is standard armed

4 System Block Diagram

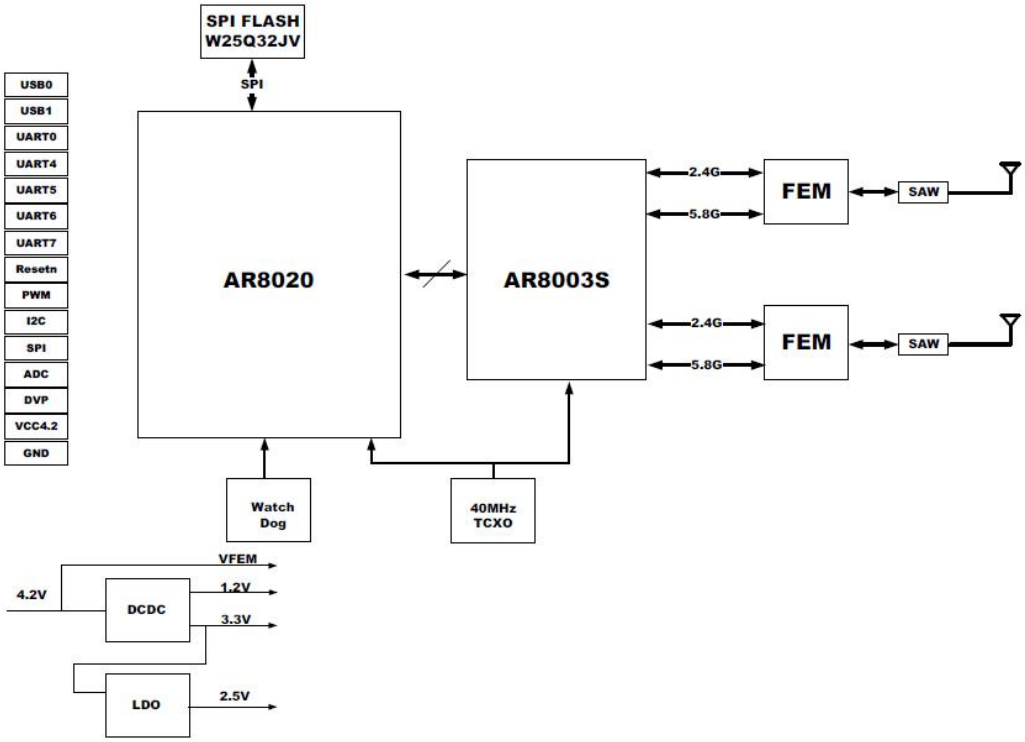

5 Performance Data

Classification	Item	Description	Data & Information
System	Volume	SKY/GROUND	L x W x H = 36mm x 30mm x 3mm
	Weight		6.8g
	Power Consumption	SKY	Max 5W (2T*2R)
		GROUND	Max 3W(1T*2R)
	Power	INPUT	4.0V ~ 5.0V
	Interface	Stamp hole	80 pins
	Operational system		Windows Linux Android
Video	Video encoder	Coding resolution	1080p@30fps, 1080p@25fps, 720p@60fps, 720p@50fps, 720p@30fps, 720p@25fps
		Standard	H.264
		Interface	8bit BT.1120/BT.656
Wireless	Operation band	2.4/5.8G	SDK default：2400MHz~2483.5MHz Support Range: 2.3GHz ~ 2.7GHz SDK default：5725MHz~5850MHz Support Range: 4.9GHz ~ 5.9GHz
	Modulation		BPSK、QPSK、16QAM、64QAM
	Occupied bandwidth	Image transmission	1.4M/10M
		Remote control	1.25MHz
	Transmission distance		>10 KM (without interference)
	Transmit bit	Downlink	Maximum 27Mbps VBR
		Uplink	BPSK, 1/2: 50 Kbps, QPSK, 2/3: 148 Kbps
	Time delay	When transmit	<30ms
	Transmit power	SKY	2.4G <=22dBm 5.8G <=19dbm Configurable
		GROUND	2.4G <=24dBm 5.8G <=20dbm Configurable
	Sensitivity	Remote Control	2.4G：<= -107dbm@bpsk 5.8G：<=-103dbm@bpsk
		Image transmission	2.4G：<= -101dbm@bpsk 5.8G: <=-98dbm@bpsk
	MIMO mode	SKY	1T2R
		GROUND	1T2R
	Working mode	Up	Selective frequency hopping
		Down	Based on uplink frequency hopping
Certification	Standard		FCC (By default) SRRC CE
Other	Temp.	Work	-10℃~75℃
		Storage	-40℃~85℃

6 Interfaces Information

Interference type	Pins	Pin type	Reused pins	Mark
VCC_5V	3			System power supply
VFEM	2			FEM power supply
GND	23			GND
UART	10	GPIO	8	1 UART for system debug 4 UARTs for other use
SPI	4	GPIO	4	1 SPI
I2C	4	GPIO		2 I2C
DVP	12	GPIO	11	1 DVP point with 8bit
ANT	2			2.4G and 5.8G antenna
PWM	4	GPIO	4	4 PWM interface
ADC	7			7 ADC interface
USB	6			1 USB DEVICE 1 USB OTG
SLEEP	1	GPIO	1	SLEEP MODE enable
SKY_GRD_MODE	1	GPIO	1	SKY/GND selection
RESET	1			Reset

7 Development Board

The following describes the common interfaces of the C201-D test baseboard. For details, see the ARlink-C201-D EKB Quick User manual.

Interface	Instruction
Power	5V Jack
USB0	Mini USB connector, defaulted to “Device”
USB1	Type-A USB connector, defaulted to “Host”
UART4	The real-time uplink data transmission channel provides the capability of sending 25 bytes every 14ms by default and can be configured as the baud rate of the SBUS. The input and output of the SBUS can be realized through level conversion
UART5	Uplink and downlink bidirectional data transmission channel
UART7	C201-D Module status output channel
UART6	Reserved UART connector
USB to UART0	Mini-USB interface, can be directly connected for Debug data input and output from UART0
SMA*2	RF
Control indicator light	Indicates the wireless link status
Video indicator light	Indicates the video data status

8 Application Introduction of ARLink-C201-D

Arlink-C201-D module is mainly applied in the transmission of UAV wireless communication data and wireless video data. In the application scenarios of data transmission of film and video, the application scenarios of wireless data and video data transmission of UAV industry will be explained below, The application modes of the airborne terminal and remote control terminal are respectively summarized below, but not limited to the following application modes.

8.1 Airborne Side

8.1.1 With chip ITE6602

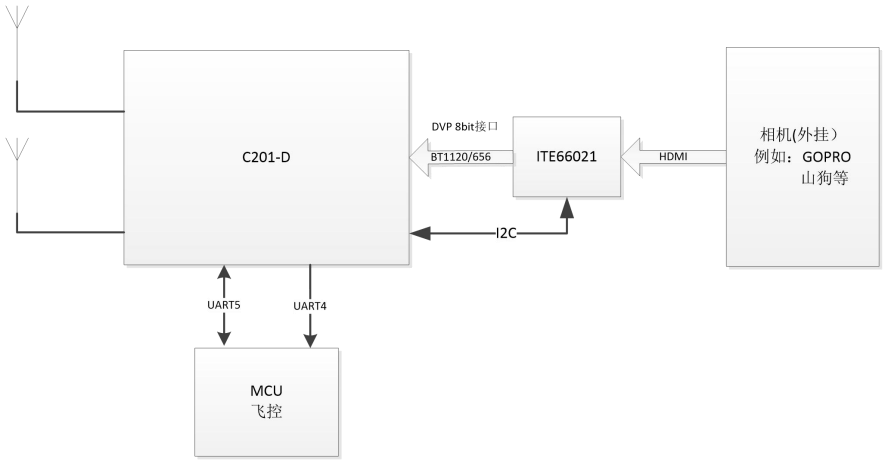

Fig 8.1 ARLink-C201-D 8.1.1 Collocate with chip ITE6602

The above application mode is the application scenario of the airborne terminal. The H.264 encoder built-in in C201-D is used. The maximum output resolution of the camera supported by this application mode is 1080P@30, and the interlace input is not supported Due to the general camera HDMI output delay in about 100ms (different types of camera output delay is different), so the delay performance index is medium, but due to ITE66021 cost-effective, so the cost advantage.

8.1.2 With conntek CH7038

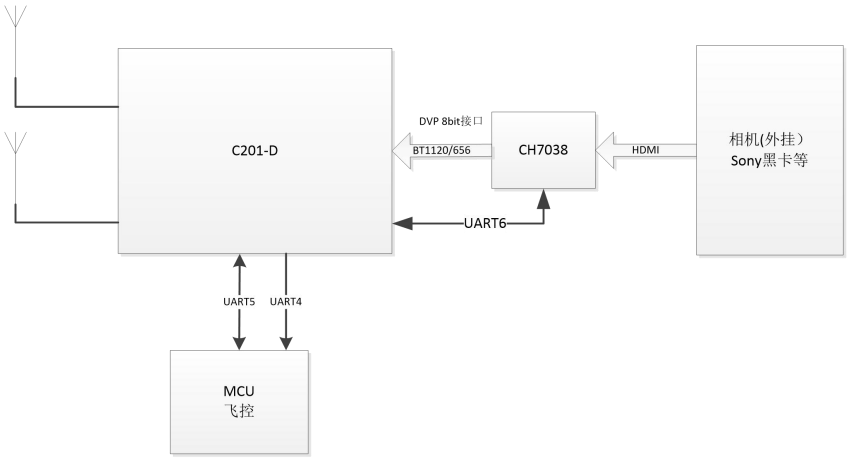

Fig 8.2 ARlink-C201-D 8.1.2 with conntek CH7038

The above application mode is the application scenario of the airborne terminal. The H.264 encoder built-in in C201-D is used. The maximum output resolution of the camera supported by this application mode is 1080P@60, and the interlace input is not supported Since the delay of HDMI output of general cameras is around 100ms (different types of cameras have different output delays), the delay performance is medium. However, since some onboard devices only support 1080P60 or 1080P50 output, this solution can solve the compatibility problem of the output of such cameras.

8.1.3 With Perceptive Sensor Module

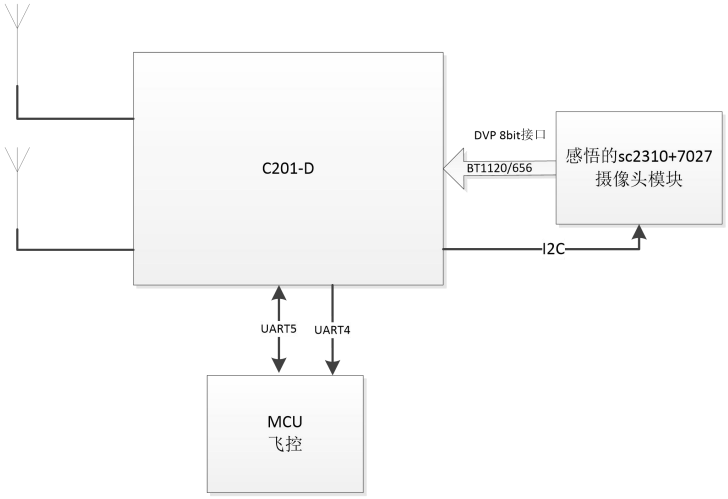

Fig 8.3 ARlink-C201-D With Perceptive Sensor Module

The above application mode is the application scenario of the airborne terminal. The H.264 encoder built-in in C201-D is used. The maximum output resolution of the camera module supported by this application mode is 1080P@30.

8.1.4 With embedded Linux platform

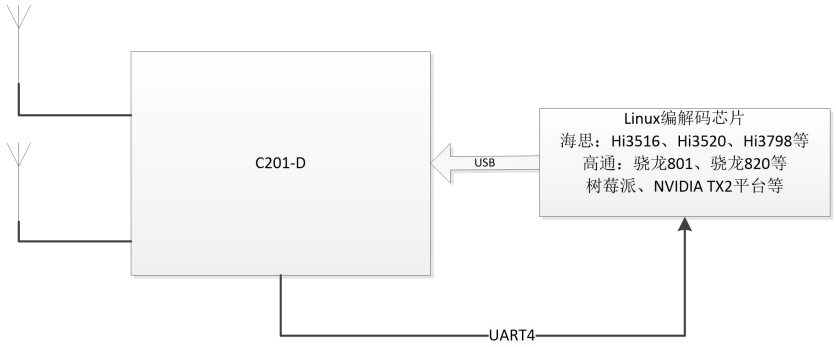

Fig 8.4 ARlink-C201-D with embedded Linux platform

The above application mode is the application scenario of the airborne terminal. The encoding is carried out by the coding chip of the Linux operating system and sent to C201-D through USB0. The USB interface driver of C201-D needs to be installed on the Linux platform and c201-D is only used for transparent transmission of video or data without H.264 encoding.

8.2 Controller Side

8.2.1 C201-D USB0

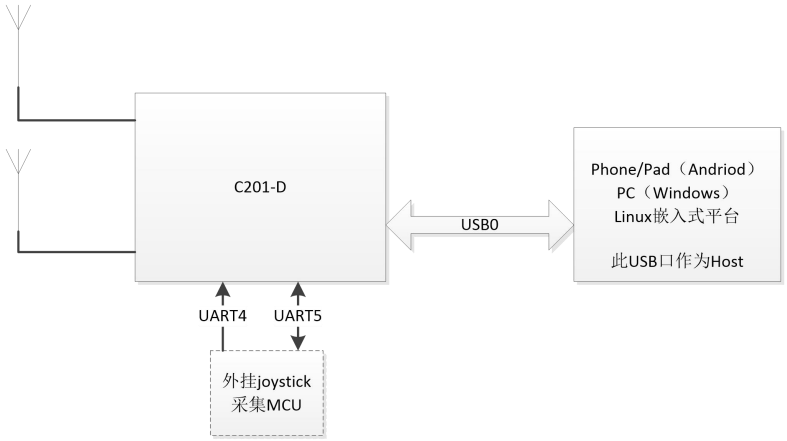

Fig 8.5 ARlink-C201-D 8.1.4 with embedded Linux platform

This application mode is based on the application scenario of ground remote control. External MCU is used to collect the data of rocker and button. When the number of external interfaces of C201-D meets the requirements of remote control, C201-D can also be used as the master MCU, and the SDK of C201-D can be used to realize the control of the buzzer by the rocker acquisition button to collect electricity and detect the buzzer C201-d USB0 is initialized to Device mode by default. Therefore, the USB of an external pad or phone needs to be initialized to Host

mode. This solution does not support iPhone/iPad connections.

8.2.2 C201-D USB1

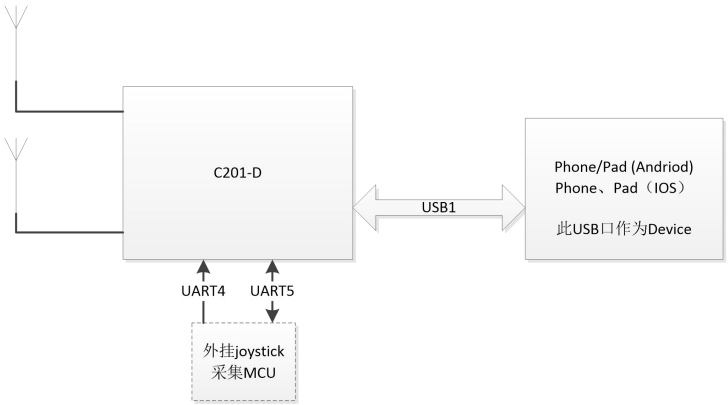

Fig 8.5 ARlink-C201-D with embedded Linux platform

This application mode is based on the application scenario of ground remote control. External MCU is used to collect the data of rocker and button. When the number of external interfaces of C201-D meets the requirements of remote control, C201-D can also be used as the master MCU, and the SDK of C201-D can be used to realize the control of the buzzer by the rocker acquisition button to collect electricity and detect the buzzer USB1 of C201-D is initialized to Host mode by default, so USB of external pad or phone needs to be initialized to Device mode. Of course, USB1 can be used as OTG mode through modification of C201-D application layer Generally, mobile phones or pads only have one USB port, so this solution can meet the requirements of decoding display and charging the pad or phone. This solution can support the connection of iPhone/iPad.

8 Compliance Information

OEM/Integrators Installation Manual
Important Notice to OEM integrators
1.This module is limited to OEM installation ONLY.
2. This module is limited to installation in mobile or fixed applications, according to Part 2.1091(b).
3.The separate approval is required for all other operating configurations, including portable configurations with respect to Part 2.1093 and different antenna configurations
4.For FCC Part 15.31 (h) and (k): The host manufacturer is responsible for additional testing to verify compliance as a composite system. When testing the host device for compliance with Part 15 Subpart B, the host manufacturer is required to show compliance with Part 15 Subpart B while the transmitter module(s) are installed and operating. The modules should be transmitting and the evaluation should confirm that the module's intentional emissions are compliant (i.e. fundamental and out of band emissions). The host manufacturer must verify that there are no additional unintentional emissions other than what is permitted in Part 15 Subpart B or emissions are complaint with the transmitter(s) rule(s). The Grantee will provide guidance to the host manufacturer for Part 15 B requirements if needed.

IMPORTANT NOTE:
In the event that these conditions can not be met (for example certain laptop configurations or co-location with another transmitter), then the FCC authorization is no longer considered valid and the FCC ID can not be used on the final product. In these circumstances, the OEM integrator will be responsible for re-evaluating the end product (including the transmitter) and obtaining a separate FCC authorization.

End Product Labeling
The final end product must be labeled in a visible area with the following:
Contains FCC ID: 2 A C S 5 - H 8 5 0 ; IC: 1 1 5 5 4 B - H 8 5 0 .

Manual Information to the End User
The OEM integrator has to be aware not to provide information to the end user regarding how to install or remove this RF module in the user's manual of the end product which integrates this module.

Federal Communication Commission Interference Statement
This equipment has been tested and found to comply with the limits for a Class B digital device, pursuant to Part 15 of the FCC Rules. These limits are designed to provide reasonable protection against harmful interference in a residential installation. This equipment generates, uses and can radiate radio frequency energy and, if not installed and used in accordance with the instructions, may cause harmful interference to radio communications. However, there is no guarantee that interference will not occur in a particular installation. If this equipment does cause harmful interference to radio or television reception, which can be determined by turning the equipment off and on, the user is encouraged to try to correct the interference by one of the following measures:

- Reorient or relocate the receiving antenna.
- Increase the separation between the equipment and receiver.
- Connect the equipment into an outlet on a circuit different from that to which the receiver is connected.
- Consult the dealer or an experienced radio/TV technician for help.

FCC Caution:
Any changes or modifications not expressly approved by the party responsible for compliance could void the user's authority to operate this equipment.
This device complies with Part 15 of the FCC Rules. Operation is subject to the following two conditions:
(1)This device may not cause harmful interference, and
(2)This device must accept any interference received, including interference that may cause undesired operation.

FCC Radiation Exposure Statement:
This equipment complies with FCC radiation exposure limits set forth for an uncontrolled environment. This equipment should be installed and operated with minimum distance 20cm between the radiator & your body. This transmitter must not be co-located or operating in conjunction with any other antenna or transmitter.

Industry Canada Statement
This device complies with Industry CAN ICES-3(B)/NMB-3(B). Operation is subject to the following two conditions:
(1) this device may not cause interference, and

(2) this device must accept any interference, including interference that may cause undesired operation of the device.
Le présent appareil est conforme aux CNR d'Industrie Canada . L'exploitation est autorisée aux deux conditions suivantes :
(1) l'appareil ne doit pas produire de brouillage, et
(2) l'utilisateur de l'appareil doit accepter tout brouillage radioélectrique subi, même si le brouillage est susceptible d'en compromettre le fonctionnement.

This transmitter must not be co-located or operating in conjunction with any other antenna or transmitter.
Cet émetteur ne doit pas être Co-placé ou ne fonctionnant en même temps qu'aucune autre antenne ou émetteur.

Caution Exposure:
This device meets the exemption from the routine evaluation limits in section 2.5 of RSS102 and users can obtain Canadian information on RF exposure and compliance.
Le dispositif répond à l'exemption des limites d'évaluation de routine dans la section 2.5 de RSS102
et les utilisateurs peuvent obtenir des renseignements canadiens sur l'exposition aux RF et le respect.

This equipment should be installed and operated with a minimum distance of 20 centimeters between the radiator and your body.
Cet équipement doit être installé et utilisé avec une distance minimale de 20 centimètres entre le radiateur et votre corps.

Requirement per KDB996369 D03

2.2 List of applicable FCC rules
List the FCC rules that are applicable to the modular transmitter. These are the rules that specifically establish the bands of operation, the power, spurious emissions, and operating fundamental frequencies. DO NOT list compliance to unintentional-radiator rules (Part 15 Subpart B) since that is not a condition of a module grant that is extended to a host manufacturer. See also Section 2.10 below concerning the need to notify host manufacturers that further testing is required.3
Explanation: This module meets the requirements of FCC 47 CFR Part15 SubpartC
FCC 47 CFR Part15 SubpartE
2.3 Summarize the specific operational use conditions
Describe use conditions that are applicable to the modular transmitter, including for example any limits on antennas, etc. For example, if point-to-point antennas are used that require reduction in power or compensation for cable loss, then this information must be in the instructions. If the use condition limitations extend to professional users, then instructions must state that this information also extends to the host manufacturer’s instruction manual. In addition, certain information may also be needed, such as peak gain per frequency band and minimum gain, specifically for master devices in 5 GHz DFS bands.

Explanation: This module has been granted Single Modular Approval for mobile applications. OEM
integrators for host products may use the module in their final products without additional FCC certifications if they meet the following conditions. Otherwise, additional FCC approvals must be obtained. The host product with the module installed must be evaluated for simultaneoustransmission requirements The user's manual for the host product must clearly indicate the operating requirements and conditions that must be observed to ensure compliance with current FCC RF exposure guidelines. To comply with FCC regulations limiting both maximum RF ourput power and human exposure to RF radiation. A label must be affixed to the outside of the host product product with the following statement: This device contains FCC ID: YQD-QLM100 The final host/Module combinations may also need to be evaluated against the FCC Part 15B criteria for unintentional radiators in order to be properly authorizaed for operation as a Part 15 digital device.

2.4 Limited module procedures

If a modular transmitter is approved as a “limited module,” then the module manufacturer is responsible for approving the host environment that the limited module is used with. The manufacturer of a limited module must describe, both in the filing and in the installation instructions, the alternative means that the limited module manufacturer uses to verify that the host meets the necessary requirements to satisfy the module limiting conditions.

A limited module manufacturer has the flexibility to define its alternative method to address the conditions that limit the initial approval, such as: shielding, minimum signaling amplitude, buffered modulation/data inputs, or power supply regulation. The alternative method could include that the limited module manufacturer reviews detailed test data or host designs prior to giving the host manufacturer approval. This limited module procedure is also applicable for RF exposure evaluation when it is necessary to demonstrate compliance in a specific host. The module manufacturer must state how control of the product into which the modular transmitter will be installed will be maintained such that full compliance of the product is always ensured. For additional hosts other than the specific host originally granted with a limited module, a Class II permissive change is required on the module grant to register the additional host as a specific host also approved with the module.

Explanation: The module is not a limited module.

2.5 Trace antenna designs

For a modular transmitter with trace antenna designs, see the guidance in Question 11 of KDB Publication 996369 D02 FAQ – Modules for Micro-Strip Antennas and traces. The integration information shall include for the TCB review the integration instructions for the following aspects: layout of trace design, parts list (BOM), antenna, connectors, and isolation requirements.a) Information that includes permitted variances (e.g., trace boundary limits, thickness, length, width, shape(s), dielectric constant, and impedance as applicable for each type of antenna);

b) Each design shall be considered a different type (e.g., antenna length in multiple(s) of frequency, the wavelength, and antenna shape (traces in phase) can affect antenna gain and must be considered);

c) The parameters shall be provided in a manner permitting host manufacturers to design the printed circuit (PC) board layout;

d) Appropriate parts by manufacturer and specifications;

e) Test procedures for design verification; and
f) Production test procedures for ensuring compliance.
The module grantee shall provide a notice that any deviation(s) from the defined parameters of the antenna trace, as described by the instructions, require that the host product manufacturer must notify the module grantee that they wish to change the antenna trace design. In this case, a Class II permissive change application is required to be filed by the grantee, or the host manufacturer can take responsibility through the change in FCC ID (new application) procedure followed by a Class II permissive change application.
Explanation: Yes, The module with trace antenna designs,refer to the RF Link schematic diagram and refer to PCB Layout.
2.6 RF exposure considerations
It is essential for module grantees to clearly and explicitly state the RF exposure conditions that permit a host product manufacturer to use the module. Two types of instructions are required for RF exposure information:
(1) to the host product manufacturer, to define the application conditions (mobile, portable – xx cm from a person's body); and (2) additional text needed for the host product manufacturer to provide to end users in their end-product manuals. If RF exposure statements and use conditions are not provided, then the host product manufacturer is required to take responsibility of the module through a change in FCC ID (new application).
Explanation: This module complies with FCC RF radiation exposure limits set forth for an uncontrolled environment, This equipment should be installed and operated with a minimum distance of 20 centimeters between the radiator and your body." This module is designed to comply with the FCC statement, FCC ID is: 2ACS5-H850.
A list of antennas included in the application for certification must be provided in the instructions. For modular transmitters approved as limited modules, all applicable professional installer instructions must be included as part of the information to the host product manufacturer. The antenna list shall also identify the antenna types (monopole, PIFA, dipole, etc. (note that for example an "omni-directional antenna" is not considered to be a specific "antenna type")).
For situations where the host product manufacturer is responsible for an external connector, for example with an RF pin and antenna trace design, the integration instructions shall inform the installer that unique antenna connector must be used on the Part 15 authorized transmitters used in the host product. The module manufacturers shall provide a list of acceptable unique connectors.
Explanation: The EUT has a Dipople Antenna.the customer can use the Dipople antenna
2.8 Label and compliance information
Grantees are responsible for the continued compliance of their modules to the FCC rules. This includes advising host product manufacturers that they need to provide a physical or e-label stating "Contains FCC ID" with their finished product. See Guidelines for Labeling and User Information for RF Devices – KDB Publication 784748.
Explanation:The host system using this module, should have label in a visible area indicated the following texts: "Contains FCC ID: 2ACS5-H850"
2.9 Information on test modes and additional testing requirements
Additional guidance for testing host products is given in KDB Publication 996369 D04 Module

Integration Guide. Test modes should take into consideration different operational conditions for a stand-alone modular transmitter in a host, as well as for multiple simultaneously transmitting modules or other transmitters in a host product. The grantee should provide information on how to configure test modes for host product evaluation for different operational conditions for a stand-alone modular transmitter in a host, versus with multiple, simultaneously transmitting modules or other transmitters in a host. Grantees can increase the utility of their modular transmitters by providing special means, modes, or instructions that simulates or characterizes a connection by enabling a transmitter. This can greatly simplify a host manufacturer's determination that a module as installed in a host complies with FCC requirements.

Explanation: Consider multi-transmission mode in the host.

2.10 Additional testing, Part 15 Subpart B disclaimer

The grantee should include a statement that the modular transmitter is only FCC authorized for the specific rule parts (i.e., FCC transmitter rules) listed on the grant, and that the host product manufacturer is responsible for compliance to any other FCC rules that apply to the host not covered by the modular transmitter grant of certification. If the grantee markets their product as being Part 15 Subpart B compliant (when it also contains unintentional-radiator digital circuity), then the grantee shall provide a notice stating that the final host product still requires Part 15 Subpart B compliance testing with the modular transmitter installed.

Explanation: The host shoule be evaluated by the FCC Subpart B.

This radio transmitter [11554B-H850] has been approved by Innovation, Science and Economic Development Canada to operate with the antenna types listed below, with the maximum permissible gain indicated. Antenna types not included in this list that have a gain greater than the maximum gain indicated for any type listed are strictly prohibited for use with this device.
Antenna information:

The have two type antenna, impedance 50 ou .Ground mode:5DB External Sky mode :H850

Antenna Information:

Antenna Type	Model Name	Antenna Manufacturer	Antenna Gain (dBi)	
			2.4 - 2.5GHz	5.15 - 5.85GHz
Dipole Antenna	5DB External antenna	N/A	**5**	**5**
Dipole Antenna	H850	N/A	4.23	3.74