HF-LPT270

Wi-Fi +BLE Module

User Manual

V1.4

Overview of Characteristic

- **Support Wi-FiIEEE802.11b/g/n andBLE5.0Wireless Standards**
- **Based onRISC SOC, 160MHz CPU, 276KBRAM,2MBFlash**
- **Support UARTData Communication with Wi-FiorBLE**
- **SupportWi-Fi STA/AP Mode**
- **SupportBLESmartBLELink Config**
- **SupportWi-FiAPSmartAPLinkand Sniffer SmartLinkV8 Config**
- **Support Wireless and Remote Firmware Upgrade Function**
- **Support Software SDK for Develop**
- **Support Different Antenna Option**
  - **HF-LPT270：Internal PCB**
- **Single +3.3V Power Supply for HF-LPT270,HF-LPT170, HF-LPT271, HF-LPB170**
- **Size:**
  - **HF-LPT270：22.5mm x 13.5mm x 3mm, SMT18 package**

TABLE OF CONTENTS

LIST OF FIGURES **3**

LIST OF TABLES **4**

HISTORY **4**

1. PRODUCT OVERVIEW **5**

1.1. General Description **5**

1.1.1 Key Application 6

1.1.2 Device Paremeters 6

1.2. Hardware Introduction **7**

1.2.1. HF-LPT270 Pins Definition 8

1.2.2. Electrical Characteristics 10

1.2.3. HF-LPT270 Mechanical Size 11

1.2.4. On-board Chip Antenna 12

1.2.5. External Antenna 12

1.2.6. Evaluation Kit 13

1.2.7. Order Information 15

1.2.8. Hardware Typical Application 16

APPENDIX D: CONTACT INFORMATION **17**

OEM/Integrators Installation Manual **18**

LIST OF FIGURES

Figure 1. Block Diagram 5
Figure 2. HF-LPT270-1 Appearance 7
Figure 3. HF-LPT270-0 Appearance 7
Figure 4. HF-LPT270 Pins Map 8
Figure 5. HF-LPT270-2 Antenna PAD Out 9
Figure 6. HF-LPT270 Mechanical Dimension.....11
Figure 7. Suggested Module Placement Region 12
Figure 8. 1st IPEX Connector 13
Figure 9. HF-LPX70 EVK Type One.....14
Figure 10. HF-LPX70 EVK Type Two 14
Figure 11. HF-LPT270 Order Information 15
Figure 12. HF-LPT270 Hardware Typical Application 16

LIST OF TABLES

Table1. HF-LPT270 Module Technical Specifications 7
Table2. HF-LPT270 Pins Definition.....9
Table3. Absolute Maximum Ratings:.....11
Table4. External Antenna Parameters 14
Table5. Evaluation Kit Interface Description 15

HISTORY

Ed.V1.006-09-2020 FirstVersion.

Ed.V1.106-10-2020 Updatesomeerror description

Ed.V1.207-16-2020 Update 1MB and 2MB softwaredifference.

Ed.V1.308-24-2020 Add HF-LPT270 HF-LPT170, HF-LPB170, HF-LPB175 type. **Ed.V1.4**09-16-2020 Delete 1MB version, and Add HF-LPT271 type.

1.1. General Description

1.1.1 Key Application

- Remote equipment monitoring
- Asset tracking and telemetry
- Security
- Industrial sensors and controls
- Home automation
- Medical devices

1.1.2 Device Paremeters

Table1. HF-LPT270Module Technical Specifications

Class	Item	Parameters
Wi-Fi Parameters	Wireless standard	IEEE 802.11 b/g/n
	Frequency range	2.412GHz-2.472GHz
	Transmit Power	802.11b: +18dBm ± 2dBm (@11Mbps)
		802.11g: +19dBm ± 2dBm (@54Mbps)
		802.11n: +19dBm ± 2dBm (@HT20, MCS7)
	Receiver Sensitivity	802.11b: -98dBm (@1Mbps)
		802.11b: -91dBm (@11Mbps)
		802.11g: -93dBm (@6Mbps)
		802.11g: -77dBm (@54Mbps)
		802.11n: -93dBm (@MCS0)
		802.11n: -73dBm (@MCS7)
BLE Parameters	Wireless standard	BLE5.0
	Frequency range	2.402GHz-2.480GHz
	Transmit Power	Max 15dBm
	ReceiverSensitivity	-90dBm
Hardware Parameters	Antenna Option	HF-LPT270: Internal: PCB antenna HF-LPT170: Internal:PCB antenna HF-LPT271: Internal:PCB antenna HF-LPB170: Internal: PCB antenna External: 1st IPEX antenna HF-LPB175: Internal: PCB antenna External: 1st IPEX antenna
	Data Interface	UART
		GPIO,SPI,PWM, ADC
	Operating Voltage	2.7~3.6V
	Operating Current	Peak (1msforevery100ms): <350mA Average(STA, No data): 45mA Average(STA, Continuous TX): 60mA Average(AP): 70mA Standby:200uA(ResetPinsettolow)
	Operating Temp.	-40℃- 85℃

	StorageTemp.	-40℃- 125℃
	Humidity	<85%
	MSL	Level 3
	Dimensions and Size	HF-LPT270： 22.5mm x 13.5mm x 3mm HF-LPT170： 22mmx15.6mmx8mm HF-LPT271： 24mmx16mmx 3mm HF-LPB170： 23.1mm x 32.8mm x 3.5mm HF-LPB175： 41.3mm x 24.1mm x 6mm
Software Parameters	Network Type	STA/AP
	Security Mechanisms	WEP/WPA-PSK/WPA2-PSK
	Encryption	WEP64/WEP128/TKIP/AES
	Update Firmware	Local Wireless, Remote OTA
	Customization	Support SDK for application develop
	Network Protocol	IPv4, TCP/UDP/HTTP/TLS(SDK)
	User Configuration	AT+instruction set. SmartBLELink BLE Config SmartAPLinkAPConfig SmartLink Config

1.2. Hardware Introduction

HF-LPT270 Wi-Fi module appearance is as following.

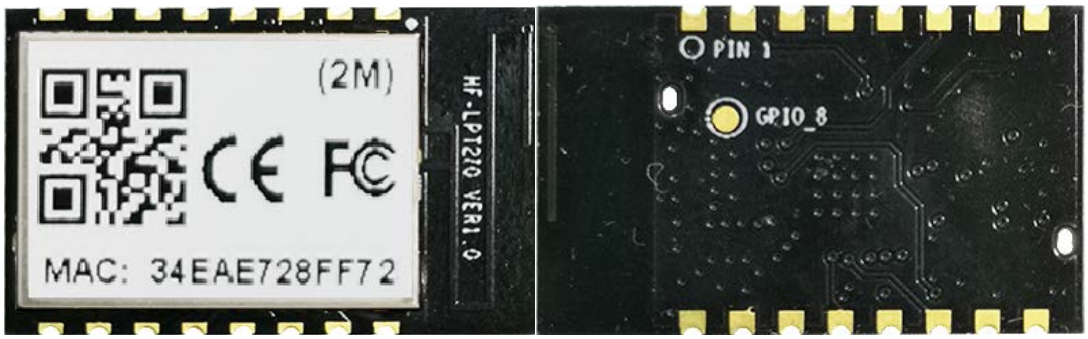

Figure 2. HF-LPT270-1Appearance

1.2.1. HF-LPT270 Pins Definition

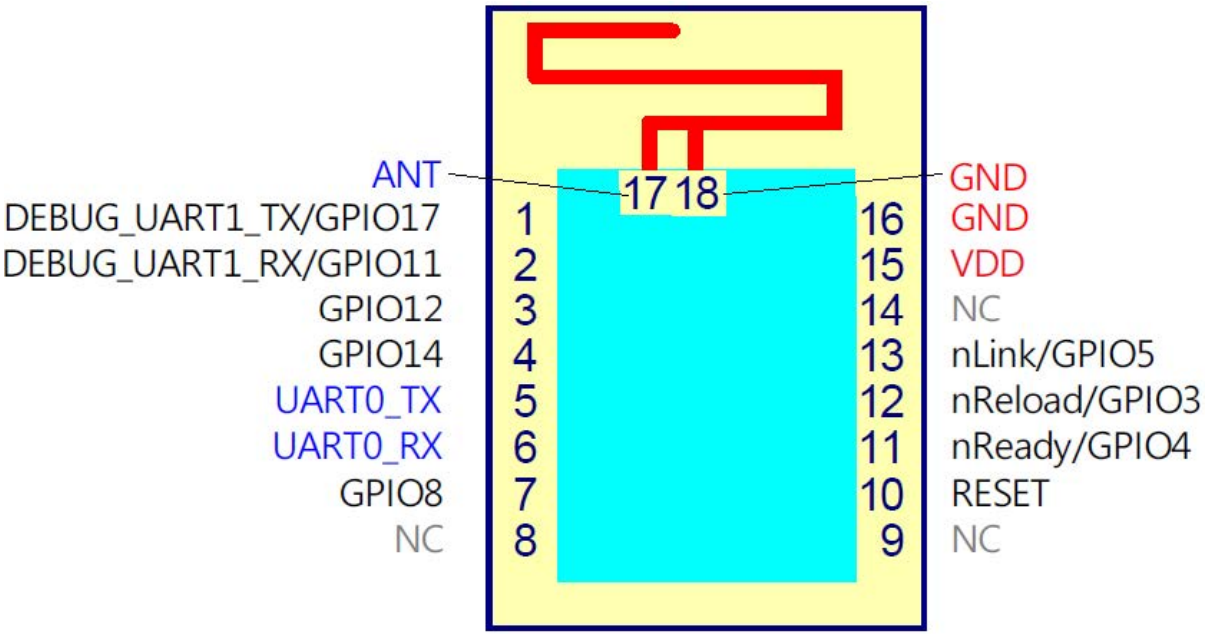

Figure 3. HF-LPT270 Pins Map

Table2. HF-LPT270 Pins Definition

Pin	Describtion	Net Name	Signal Type	Comments
1	UART1_TX	DEBUG_UART1_TX	O	3.3V TTL UART1 Debug Output GPIO17
2	UART1_RX	DEBUG_UART1_RX	I	3.3V TTL UART1 Debug Input GPIO11
3	GPIO12	GPIO12	I/O	GPIO12
4	GPIO14	GPIO14	I/O	GPIO14
5	UART0	UART0_TX	O,PU	3.3V TTL UART0 Communication Output GPIO16
6	UART0	UART0_RX	I	3.3V TTL UART0 Communication Input GPIO7
7		GPIO8	I/O	BootSelect, default low,leaveitunconnected. Low: boot from flash. High: boot from UART.
8		NC		
9		NC		
10	Module Reset	RESET	I,PU	**“Low” effective reset input. There is RC reset circuit internally. Noneedof external RC reset circuit.**
11	Module Boot Up Indicator	nReady	O	“0” – Boot-up OK; “1” – Boot-up Fail; GPIO4, PWM2
12	Multi-Function	nReload	I,PU	**Detailed functions see <Notes>** GPIO3, PWM3

Pin	Describtion	Net Name	Signal Type	Comments
13	Wi-Fi Status	nLink	O	"0" – Wi-Fi connect to router "1" – Wi-Fi unconncted; **Detailed functions see <Notes>** GPIO5
14		NC		
15	+3.3V Power	VDD	Power	
16	Ground	GND	Power	
17		ANT	Signal	Only-0 and-2 have these two pins Antenna Pad Out. See following for detailed.
18	Ground	GND	Power	

- -0 use external IPEX antenna, PIN17 is useless.
- -2 use antenna PAD out, there is two pins can be used, recommend to use PIN17.

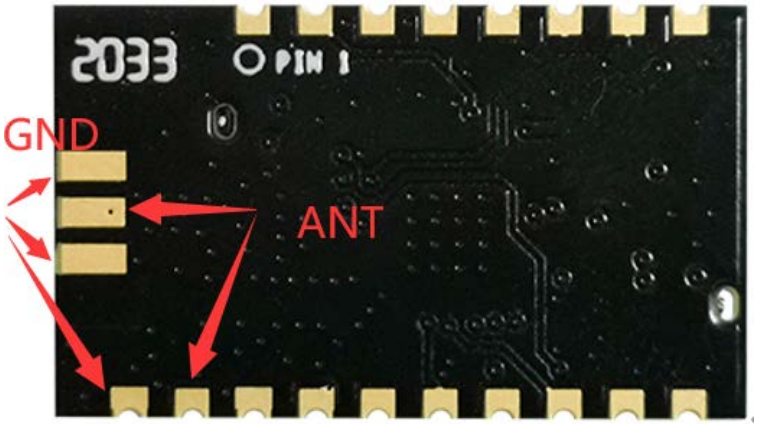

Figure 4. HF-LPT270-2 Antenna PAD Out

<Notes>

I— Input；O— Output

PU—InternalResistor Pull Up； I/O: Digital I/O；Power—Power Supply

nReload Pin (Button) function:

1. **When this pin is set to "low" during module boot up, the module will enter wireless firmware and config upgrade mode. This mode is used for customer manufacture. See Appendix to download software tools for customer batch configuration and upgrade firmware during mass production.**
2. **After module is powered up, short press this button (0.2s<"Low" <1.5s) and loose to make the module go into SmartBLELinkconfig mode, waiting for APP to set routerSSIDandpassword, config module connect to router. Recommend to use SmartBleLink BLE method config, may use AT+SMARTCONFIG to choose other config mode(SmartLink V8 and SmartAPLink).**
   See Appendix to download SmartBLELink, SmartLinkV8andSmartAPLinkAPP
3. **After module is powered up, long press this button ("Low" >4s) and loose to make the module recover to factory setting.**

High-Flying strongly suggest customer fan out this pin to connector or button for "Manufacture" upgrade or "SmartLink" application.

nReady Pin (LED) function(Low effective):

1. **OS initial finished indicator. Only after this pin output low, can the UART function be used.**

nLink Pin (LED) function(Low effective):

1. **At wireless firmware and config upgrade mode , this LED used to indicate configure and upgrade status.**
2. **At "SmartLink" config mode, this LED isused to indicate APP to finish setting.**
3. **At normal mode, it's Wi-Fi link status indicator.Output Low when STA mode connect to router AP or other STA connect to it when in AP mode.**

High-Flying strongly suggest customer fan out this pin to LED.

UART1 Debug：

1. **Is used for debug log or firmware program, baud rate 921600.**

1.2.2. Electrical Characteristics

Table3. Absolute Maximum Ratings:

Parameter	Condition	Min.	Typ.	Max.	Unit
Work temperature range		-40		85	°C
Maximum soldering temperature	IPC/JEDEC J-STD-020			260	°C
ESD (Human Body ModelHBM)	TAMB=25°C			2.5	KV
ESD (MM)	TAMB=25°C			0.25	KV

1.2.3. HF-LPT270Mechanical Size

HF-LPT270 modules physical size （Unit: mm） as follows:

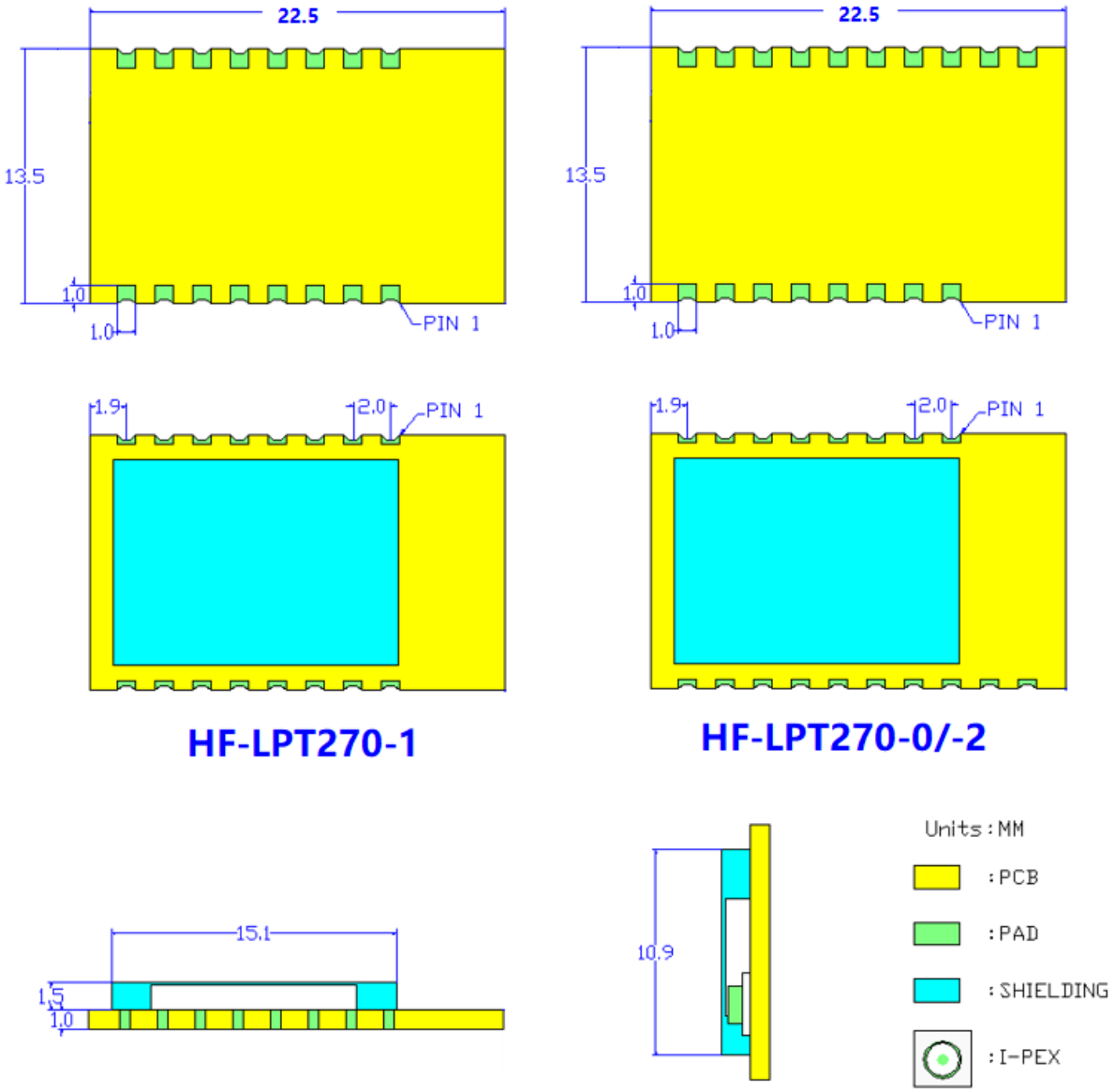

Figure 5. HF-LPT270 Mechanical Dimension

1.2.4. On-board Chip Antenna

HF modules support internal on-board chip antenna option. When customer select internal antenna, you shall comply with following antenna design rules and module location suggestions:

- For customer PCB, module antenna area can't put componet or paste GND net;(See the following red arrow area)
- Antenna must away from metal or high components at least 10mm;
- Antenna can't be shieldedby any meal enclosure; All cover, include plastic, shall away from antenna at least 10mm;

High-Flying suggest module better locate in following region at customer board, which to reduce the effect to antenna and wireless signal, and better consult High-Flying technical people when you structure your module placement and PCB layout.

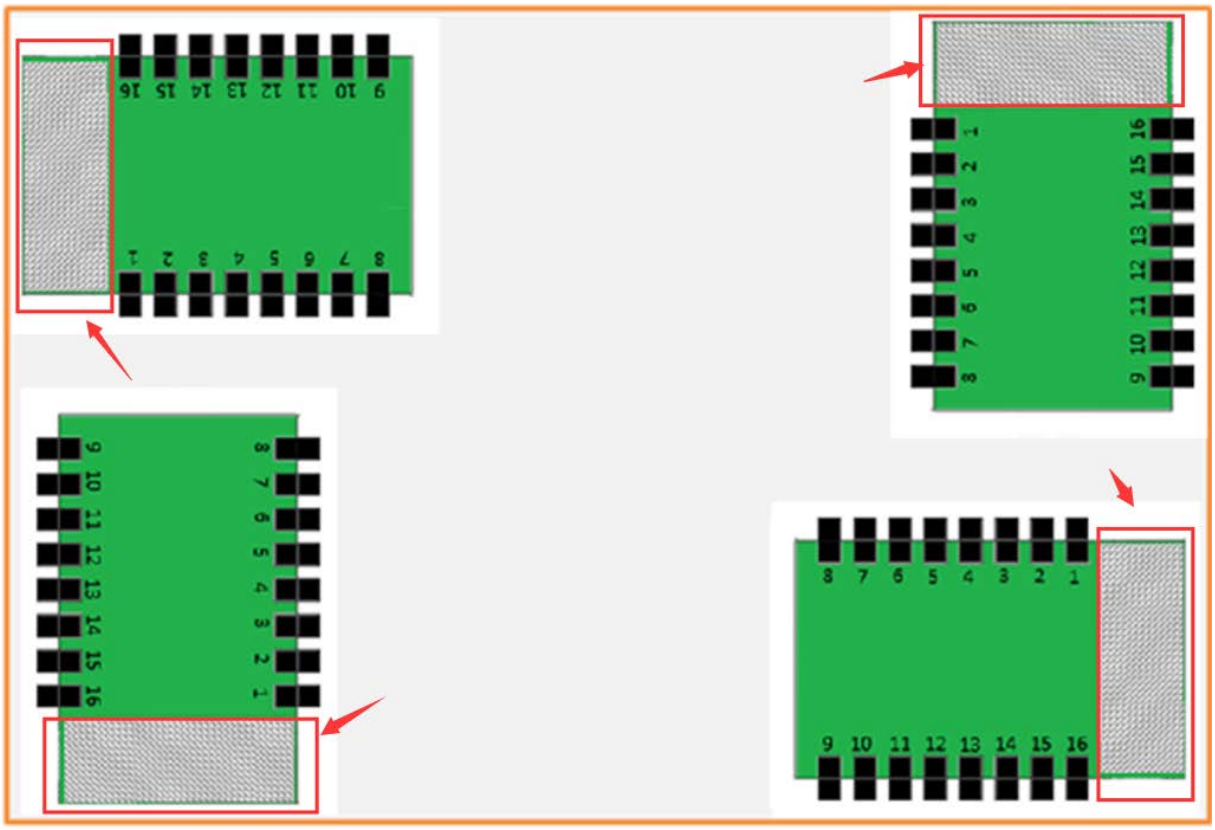

Figure 6. Suggested Module Placement Region

1.2.5. External Antenna

HF-LPT270 module supports external antenna(IPEX) option for user dedicated application.

If user select external antenna,HF-LPT270 Wi-Fi modules must be connected to the 2.4G antenna according to IEEE 802.11b/g/n standards.We can provide external antenna if needed. Contact with our salesman.

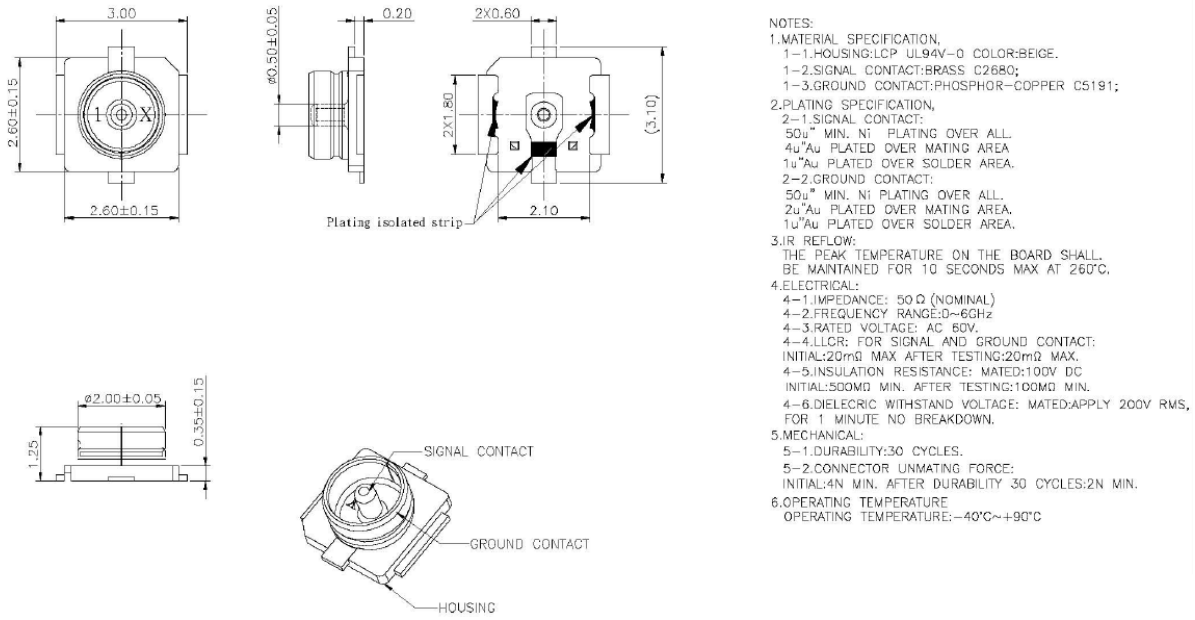

Figure 7. 1st IPEX Connector

The antenna parameters required as follows:

Table4. External Antenna Parameters

Item	Parameters
Frequency range	2.4~2.5GHz
Impedance	50 Ohm
VSWR	2 (Max)
Return Loss	-10dB (Max)
Connector Type	IPEX or populate directly

1.2.6. Evaluation Kit

High-Flying provides the EVK to promote user to familiar the product and develop the detailed application. The evaluation kit shown as below, user can connect to module with the RS-232 UART, USB (Internal USB to UARTconvetor) or Wireless interface to configure the parameters, manage the module or do the some functional tests.

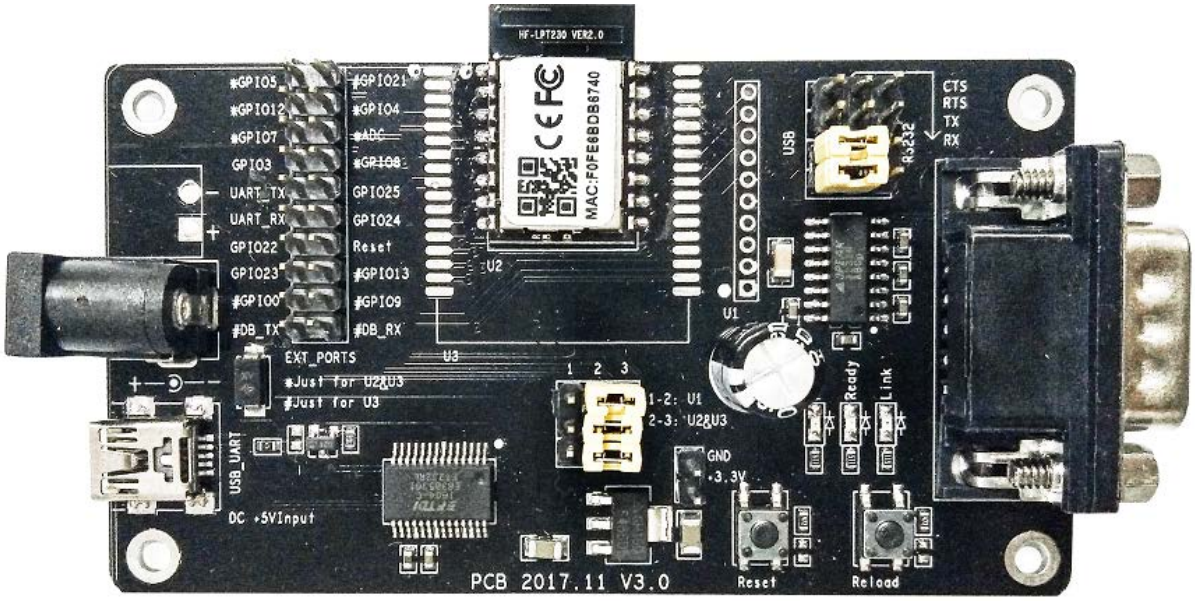

Figure 8. HF-LPX70 EVKTypeOne

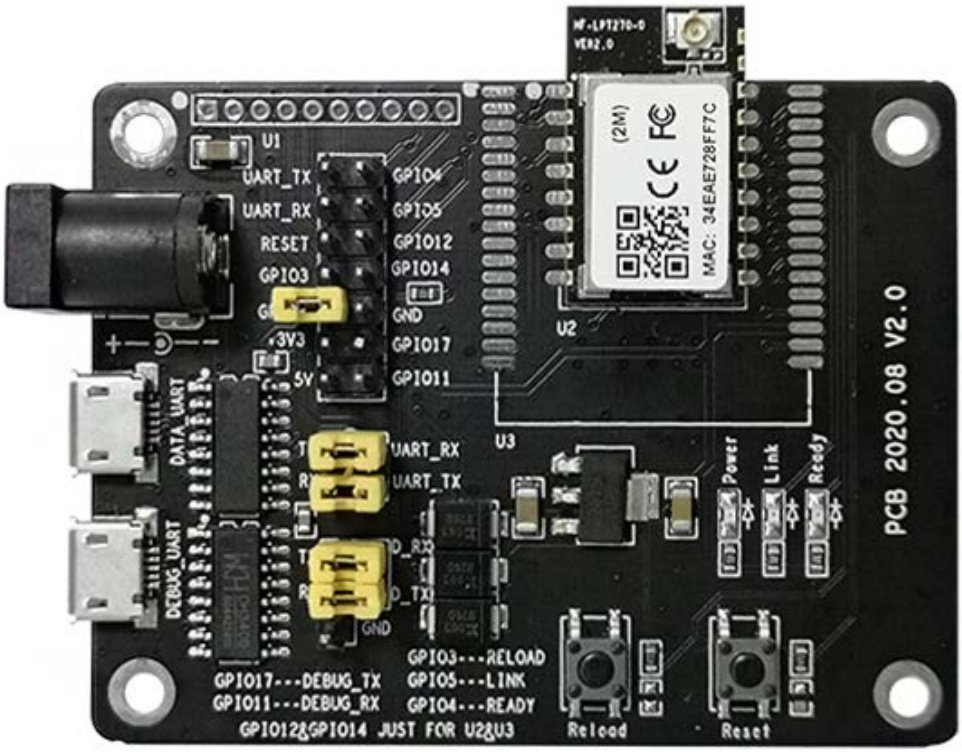

Figure 9. HF-LPX70 EVKTypeTwo

Notes: User need download USB to UART port driver from High-Flying web or contact with technical support people for more detail.

The external interface description for evaluation kit as follows:

Table5. Evaluation Kit Interface Description

Function	Name	Description
Extern	RS23	Main data/command RS-232

al Interfa ce	2	interface,**thisinterfacemaximumbaudrateis460800.CannotbeusedfordebugUARTlog(Itneed921600)**
	USB	USB to UART interface,canbeusedfordebugUARTlog
	DC5V	DC jack for power in, 5～9V input.
LED	Power	Power LED
	Ready	nReady LED
	Link	nLink LED
Button	nRelo ad	Smartlinkand Restore factory default configuration. SeemoreforPINDefinition

1.2.7. Order Information

Base on customer detailed requirement, HF-LPT270 modules provide different variants and physical type for detailed application.

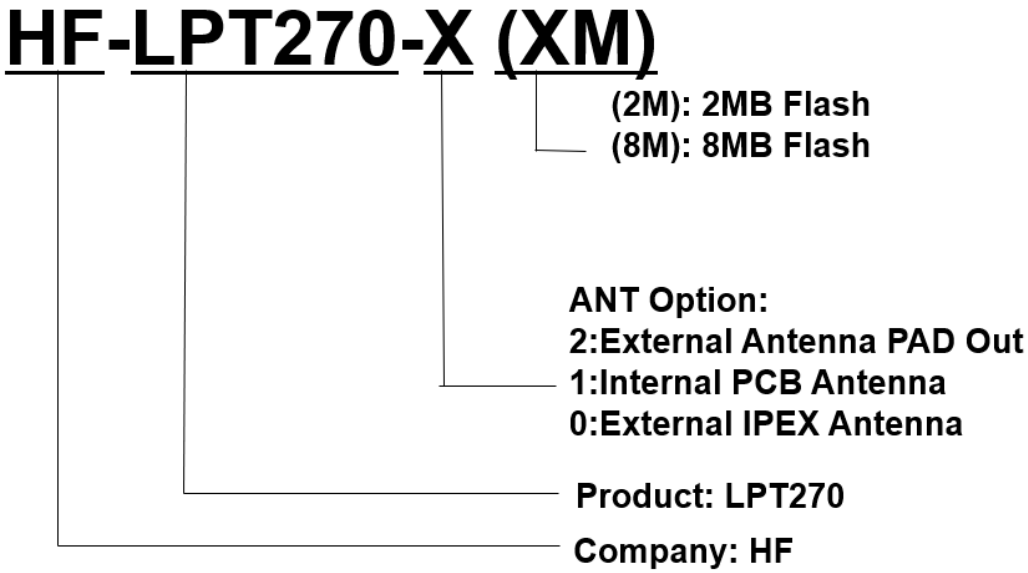

Figure 10. HF-LPT270 Order Information

1.2.8. Hardware Typical Application

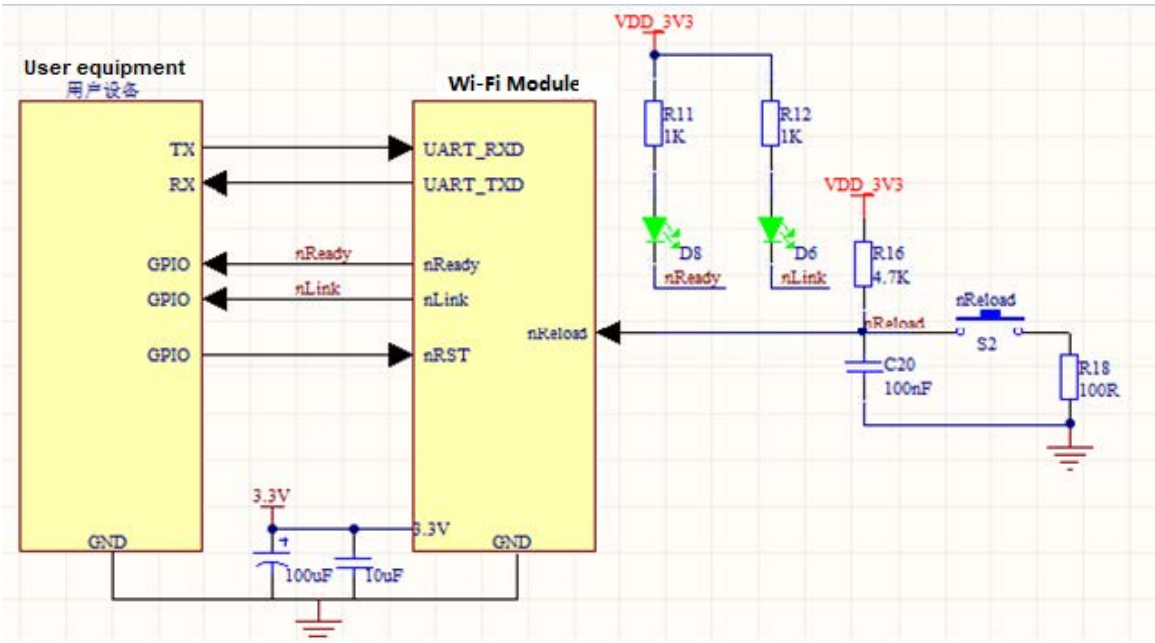

Figure 11. HF-LPT270 Hardware Typical Application

Notes:

nReset- Module hardware reset signal. Input. Logics “0” effective.

There is pull-up resister internal and no external pull-up required. When module power up or some issue happened, MCU need assert nRST signal “0” at least 10ms, then set” 1” to keep module fully reset.

nLink- Module WIFI connection status indication. Output.

(This pin is recommend to connect to LED, indicate status when the module in wireless upgrade mode)

When module connects to AP (AP associated), this pin will output “0”. This signal used to judge if module already at WiFi connection status. Thers is pull-up resister internal and no external pull-up required. IfnLink function not required, can leave this pin open.

nReady- Module boot up ready signal. Output. Logics “0” effective.

The module will output “0” after normal boot up. This signal used to judge if module finish boot up and ready for application or working at normal mode. If nReady function not required, can leave this pin open.

nReload- Module restore to factory default configuration.Input. Logics “0” effective.

(This pin is recommend to connect to button, is used to enter wireless upgrade mode)

User can de-assert nReload signal “0” more than 4s through button or MCU pin, then release, module will restore to factory default configuration and re-start boot up process.. If nReload function not required, can leave this pin open.

UART0_TXD/RXD- UART port data transmit and receive signal.

APPENDIX D:CONTACT INFORMATION

Address: Room 1002,Building 1,No.3000,Longdong Avenue,Pudong New Area,Shanghai,China,201203
Web:www.hi-flying.com
Service Online:400-189-3108/18616078755
Sales Contact: sales@hi-flying.com

For more information about High-Flying modules, applications, and solutions, please visit our web site http://www.hi-flying.com/en/

© Copyright High-Flying, May, 2011
The information disclosed herein is proprietary to High-Flying and is not to be used by or disclosed to unauthorized persons without the written consent of High-Flying. The recipient of this document shall respect the security status of the information.
The master of this document is stored on an electronic database and is “write-protected” and may be altered only by authorized persons at High-Flying. Viewing of the master document electronically on electronic database ensures access to the current issue. Any other copies must be regarded as uncontrolled copies.

OEM/Integrators Installation Manual

1. List of applicable FCC rules

This module has been tested and found to comply with part 15.247 requirements for Modular Approval.

2. Summarize the specific operational use conditions

This module can be used in IoT devices. The input voltage to the module should be nominally 3.3VDC and the ambient temperature of the module should not exceed 85℃. HF-LPT270 has one PCB antenna with max antenna gain 2.0dBi. If the antenna needs to be changed, the certification should be re-applied.

3. Limited module procedures

NA

4. Trace antenna designs

NA

5. RF exposure considerations

This equipment complies with FCC radiation exposure limits set forth for an uncontrolled environment .This equipment should be installed and operated with minimum distance 20cm between the radiator& your body. If the device built into a host as a portable usage, the additional RF exposure evaluation may be required as specified by § 2.1093.

6. Antennas

Antenna type: PCB antenna	2.4GHz band Peak Gain: 2.0dBi

7. Label and compliance information

When the module is installed in the host device, the FCC ID label must be visible through a window on the final device or it must be visible when an access panel, door or cover is easily re-moved. If not, a second label must be placed on the outside of the final device that contains the following text: “Contains FCC ID: 2ACSVHF-LPT270” The FCC ID can be used only when all FCC ID compliance requirements are met.

8. Information on test modes and additional testing requirements

a) The modular transmitter has been fully tested by the module grantee on the required number of channels, modulation types, and modes, it should not be necessary for the host installer to re-test all the available transmitter modes or settings. It is recommended that the host product manufacturer, installing the modular transmitter,perform some investigative measurements to confirm that the resulting composite system does not exceed the spurious emissions limits or band edge limits (e.g., where a different antenna may be causing additional emissions).

b) The testing should check for emissions that may occur due to the intermixing of emissions with the other transmitters, digital circuitry, or due to physical properties of the host product (enclosure). This investigation is especially important when integrating multiple modular transmitters where the certification is based on testing each of them in a stand-alone configuration. It is important to note that host product manufacturers should not assume that because the modular transmitter is certified that they do not have any responsibility for final product compliance.

c) If the investigation indicates a compliance concern the host product manufacturer is obligated to mitigate the issue. Host products using a modular transmitter are subject to all the applicable individual technical rules as well as to the general conditions of operation in Sections 15.5, 15.15, and 15.29 to not cause interference. The operator of the host product will be obligated to stop operating the device until the interference have been corrected , WIFI and Bluetooth testing using QRCT in FTM mode.

9. Additional testing, Part 15 Subpart B disclaimer

The final host / module combination need to be evaluated against the FCC Part 15B criteria for unintentional radiators in order to be properly authorized for operation as a Part 15 digital device.
The host integrator installing this module into their product must ensure that the final composite product complies with the FCC requirements by a technical assessment or evaluation to the FCC rules, including the transmitter operation and should refer to guidance in KDB 996369.
For host products with certified modular transmitter, the frequency range of investigation of the composite system is specified by rule in Sections 15.33(a)(1) through (a)(3), or the range applicable to the digital device, as shown in Section 15.33(b)(1), whichever is the higher frequency range of investigation
When testing the host product, all the transmitters must be operating.The transmitters can be enabled by using publicly-available drivers and turned on, so the transmitters are active. In certain conditions it might be appropriate to use a technology-specific call box (test set) where accessory devices or drivers are not available.
When testing for emissions from the unintentional radiator, the transmitter shall be placed in the receive mode or idle mode, if possible. If receive mode only is not possible then, the radio shall be passive (preferred) and/or active scanning. In these cases, this would need to enable activity on the communication BUS (i.e., PCIe, SDIO, USB) to ensure the unintentional radiator circuitry is enabled. Testing laboratories may need to add attenuation or filters depending on the signal strength of any active beacons (if applicable) from the enabled radio(s). See ANSI C63.4, ANSI C63.10 and ANSI C63.26 for further general testing details.
The product under test is set into a link/association with a partnering WLAN device, as per the normal intended use of the product. To ease testing, the product under test is set to transmit at a high duty cycle, such as by sending a file or streaming some media content.

FCC Statement:
Any Changes or modifications not expressly approved by the party responsible for compliance could void the user's authority to operate the equipment.
This device complies with part 15 of the FCC Rules. Operation is subject to the following two conditions:
(1) This device may not cause harmful interference, and
(2) This device must accept any interference received, including interference that may cause undesired operation.

<END OF DOCUMENT>