NCL Calibration Laboratories
Division of APREL Laboratories.

SWR

Head

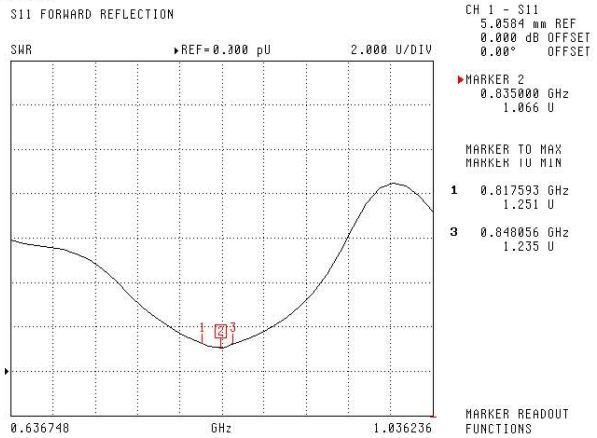

Body

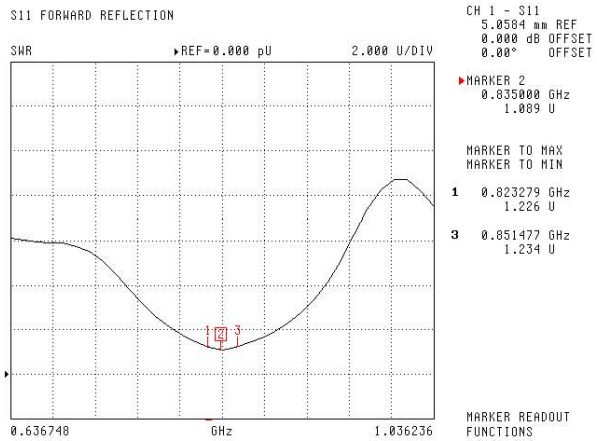

7

This page has been reviewed for content and attested to by signature within this document.

NCL Calibration Laboratories
Division of APREL Laboratories.

Smith Chart Dipole Impedance

Head

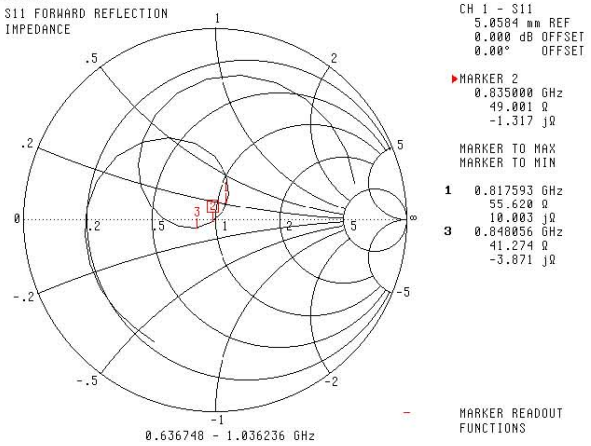

Body

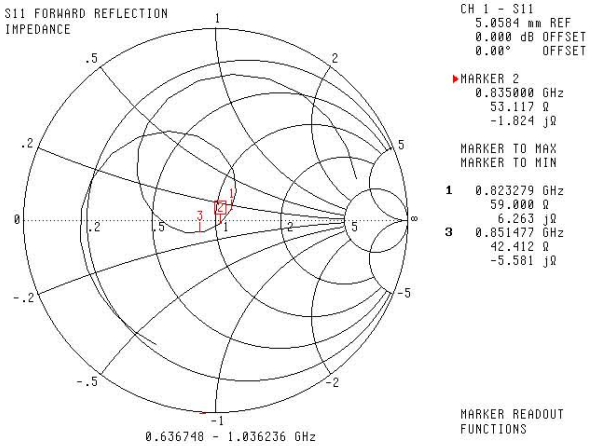

8

This page has been reviewed for content and attested to by signature within this document.

NCL Calibration Laboratories
Division of APREL Laboratories.

Test Equipment

The test equipment used during Probe Calibration, manufacturer, model number and, current calibration status are listed and located on the main APREL server R:\NCL\Calibration Equipment\Instrument List 2014.

This page has been reviewed for content and attested to by signature within this document.

NCL CALIBRATION LABORATORIES

Calibration File No: DC-1601
Project Number: BAC-dipole –cal-5779

CERTIFICATE OF CALIBRATION

It is certified that the equipment identified below has been calibrated in the **NCL CALIBRATION LABORATORIES** by qualified personnel following recognized procedures and using transfer standards traceable to NRC/NIST.

Validation Dipole (Head & Body)

Manufacturer: APREL Laboratories
Part number: ALS-D-1900-S-2
Frequency: 1900 MHz
Serial No: 210-00710

Customer: Bay Area Compliance Laboratory (China)

Calibrated: 9th October, 2014
Released on: 9th October, 2014

This Calibration Certificate is Incomplete Unless Accompanied with the Calibration Results Summary

Released By: _____
Art Brennan, Quality Manager

NCL CALIBRATION LABORATORIES

Suite 102, 303 Terry Fox Dr.
Kanata, ONTARIO
CANADA K2K 3J1

Division of APREL Lab.
TEL: (613) 435-8300
FAX: (613)435-8306

NCL Calibration Laboratories
Division of APREL Laboratories.

Conditions

Dipole 210-00710 was received in good condition and was a re-calibration.

Ambient Temperature of the Laboratory: 22 °C +/- 0.5°C
Temperature of the Tissue: 21 °C +/- 0.5°C

Attestation

The below named signatories have conducted the calibration and review of the data which is presented in this calibration report.

We the undersigned attest that to the best of our knowledge the calibration of this subject has been accurately conducted and that all information contained within the results pages have been reviewed for accuracy.

Art Brennan, Quality Manager

Maryna Nesterova Calibration Engineer

Primary Measurement Standards

Instrument	Serial Number	Cal due date
Tektronix USB Power Meter	11C940	May 14, 2015
Network Analyzer Anritsu 37347C	002106	Feb. 20, 2015

This page has been reviewed for content and attested to by signature within this document.

NCL Calibration Laboratories
Division of APREL Laboratories.

Calibration Results Summary

The following results relate the Calibrated Dipole and should be used as a quick reference for the user.

Mechanical Dimensions

Length: 67.1 mm
Height: 38.9 mm

Electrical Specification

Tissue	Frequency	SWR:	Return Loss	Impedance
Head	1900MHz	1.084 U	-27.92 dB	52.247 Ω
Body	1900MHz	1.128 U	-24.40 dB	52.618 Ω

System Validation Results

Tissue	Frequency	1 Gram	10 Gram	Peak
Head	1900 MHz	39.481	20.44	73.364
Body	1900 MHz	39.715	20.552	73.565

Head
Area Scan

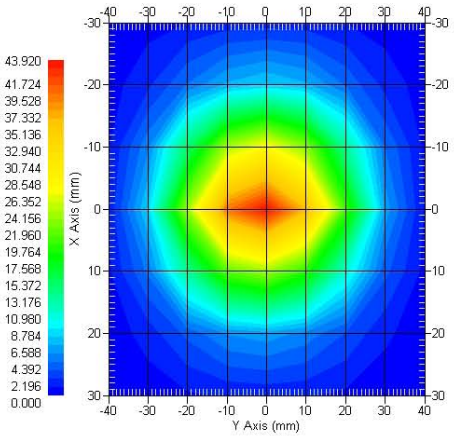

Body
Area Scan

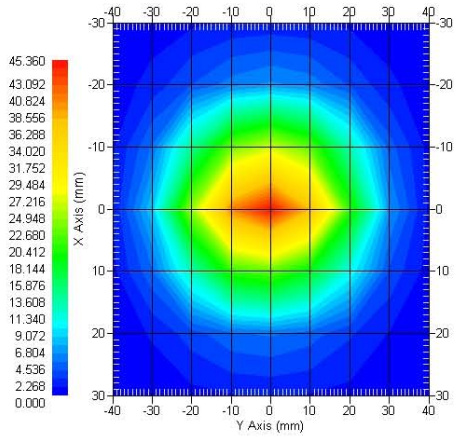

3

This page has been reviewed for content and attested to by signature within this document.

NCL Calibration Laboratories
Division of APREL Laboratories.

Introduction

This Calibration Report has been produced in line with the SSI Dipole Calibration Procedure SSI-TP-018-ALSAS. The results contained within this report are for Validation Dipole 210-00710. The calibration routine consisted of a three-step process. Step 1 was a mechanical verification of the dipole to ensure that it meets the mechanical specifications. Step 2 was an Electrical Calibration for the Validation Dipole, where the SWR, Impedance, and the Return loss were assessed. Step 3 involved a System Validation using the ALSAS-10U, along with APREL E-020 30 MHz to 6 GHz E-Field Probe Serial Number 225.

References

- SSI-TP-018-ALSAS Dipole Calibration Procedure
- SSI-TP-016 Tissue Calibration Procedure
- IEEE 1528:2013 "Recommended Practice for Determining the Peak Spatial-Average Specific Absorption Rate (SAR) in the Human Head from Wireless Communications Devices: Measurement Techniques"
- IEC-62209-1:2006 "Human exposure to radio frequency fields from hand-held and body-mounted wireless communication devices – Human models, instrumentation, and procedures"
  Part 1: "Procedure to determine the Specific Absorption Rate (SAR) for hand-held devices used in close proximity of the ear (frequency range of 300 MHz to 3 GHz)"
- IEC-62209-2:2010 "Human exposure to radio frequency fields from hand-held and body-mounted wireless communication devices – Human models, instrumentation, and procedures"
  Part 2: "Procedure to determine the Specific Absorption Rate (SAR) for hand-held devices used in close proximity of the ear (frequency range of 30 MHz to 6 GHz)"
- D28-002 Procedure for validation of SAR system using a dipole

Conditions

Dipole 210-00710 was a recalibration.

Ambient Temperature of the Laboratory:	22 °C +/- 0.5°C
Temperature of the Tissue:	20 °C +/- 0.5°C

Dipole Calibration uncertainty

The calibration uncertainty for the dipole is made up of various parameters presented below.

Mechanical	1%
Positioning Error	1.22%
Electrical	1.7%
Tissue	2.2%
Dipole Validation	2.2%
TOTAL	**8.32% (16.64% K=2)**

This page has been reviewed for content and attested to by signature within this document.

NCL Calibration Laboratories
Division of APREL Laboratories.

Dipole Calibration Results

Mechanical Verification

APREL Length	APREL Height	Measured Length	Measured Height
68.0 mm	39.5 mm	67.1mm	38.9 mm

Electrical Validation

Tissue	Frequency	SWR:	Return Loss	Impedance
Head	1900MHz	1.084 U	-27.92 dB	52.247 Ω
Body	1900MHz	1.128 U	-24.40 dB	52.618 Ω

Tissue Validation

	Dielectric constant, ε_r	Conductivity, σ [S/m]
Head Tissue 1900MHz	40.20	1.38
Body Tissue 1900MHz	52.63	1.46

5

This page has been reviewed for content and attested to by signature within this document.

NCL Calibration Laboratories
Division of APREL Laboratories.

The Following Graphs are the results as displayed on the Vector Network Analyzer.

S11 Parameter Return Loss

Head: Frequency Range 1.865 to 1.937 GHz

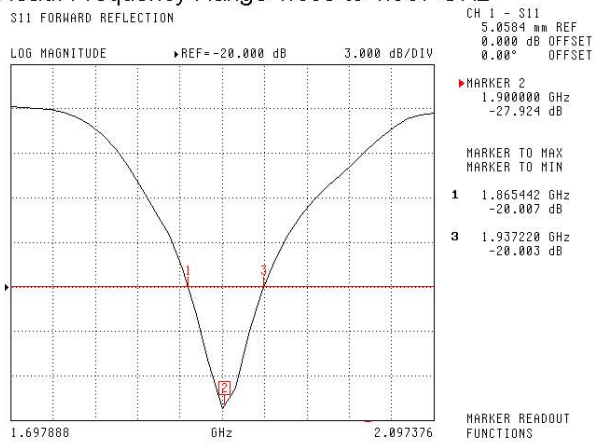

Body: Frequency Range 1.869 to 1.931 MHz

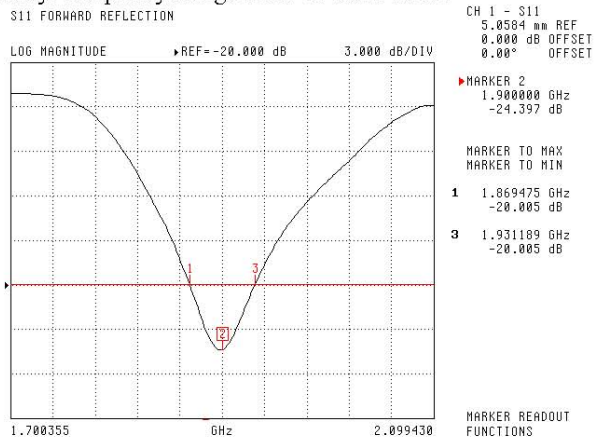

6

This page has been reviewed for content and attested to by signature within this document.

NCL Calibration Laboratories
Division of APREL Laboratories.

SWR

Head

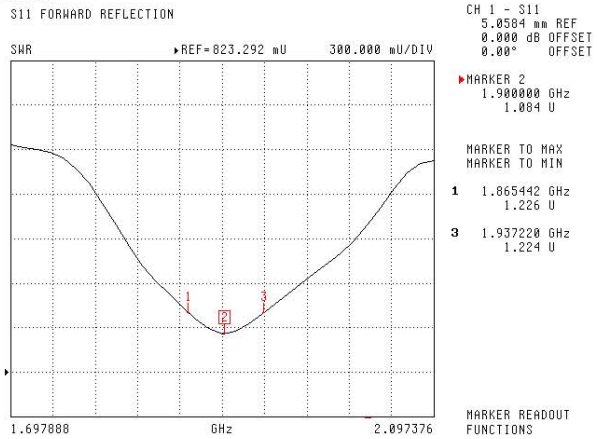

Body

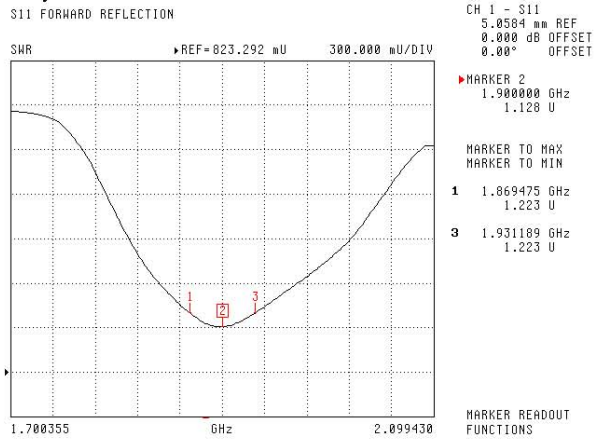

7

This page has been reviewed for content and attested to by signature within this document.

NCL Calibration Laboratories
Division of APREL Laboratories.

Smith Chart Dipole Impedance

Head

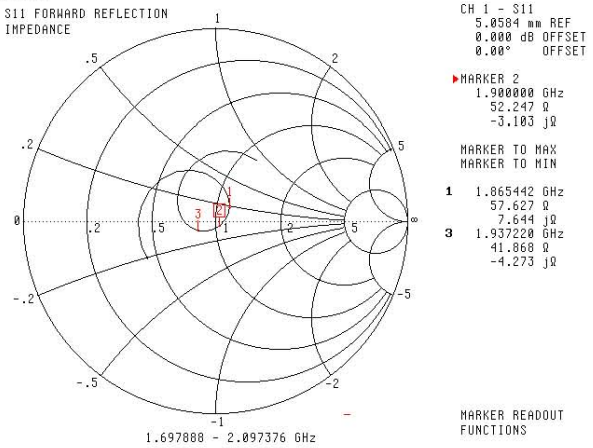

Body

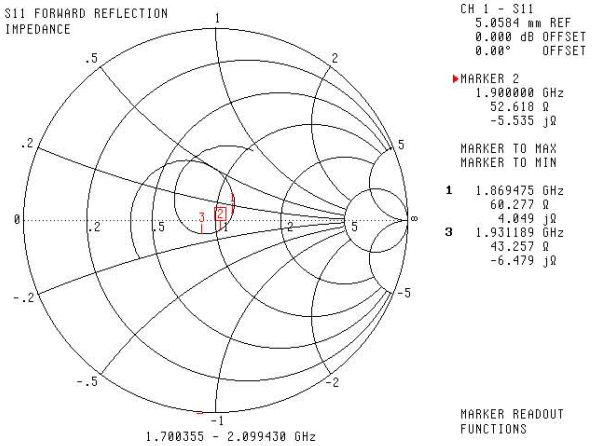

8

This page has been reviewed for content and attested to by signature within this document.

NCL Calibration Laboratories
Division of APREL Laboratories.

Test Equipment

The test equipment used during Probe Calibration, manufacturer, model number and, current calibration status are listed and located on the main APREL server R:\NCL\Calibration Equipment\Instrument List 2014

This page has been reviewed for content and attested to by signature within this document.

NCL CALIBRATION LABORATORIES

Calibration File No: DC-1602
Project Number: BAC-dipole-cal-5779

CERTIFICATE OF CALIBRATION

It is certified that the equipment identified below has been calibrated in the **NCL CALIBRATION LABORATORIES** by qualified personnel following recognized procedures and using transfer standards traceable to NRC/NIST.

Validation Dipole (Head & Body)

Manufacturer: APREL Laboratories
Part number: ALS-D-2450-S-2
Frequency: 2450 MHz
Serial No: 220-00758

Customer: Bay Area Compliance Laboratory

Calibrated: 9th October, 2014
Released on: 9th October, 2014

This Calibration Certificate is Incomplete Unless Accompanied with the Calibration Results Summary

Released By: _____
Art Brennan, Quality Manager

NCL CALIBRATION LABORATORIES
Suite 102, 303 Terry Fox Dr.
Kanata, ONTARIO
CANADA K2K 3J1
Division of APREL Lab.
TEL: (613) 435-8300
FAX: (613)435-8306

NCL Calibration Laboratories
Division of APREL Laboratories.

Conditions

Dipole 220-00758 was received in good condition and was a re-calibration.

Ambient Temperature of the Laboratory: 22 °C +/- 0.5°C
Temperature of the Tissue: 21 °C +/- 0.5°C

Attestation

The below named signatories have conducted the calibration and review of the data which is presented in this calibration report.

We the undersigned attest that to the best of our knowledge the calibration of this subject has been accurately conducted and that all information contained within the results pages have been reviewed for accuracy.

Art Brennan, Quality Manager

Maryna Nesterova Calibration Engineer

Primary Measurement Standards

Instrument	Serial Number	Cal due date
Tektronix USB Power Meter	11C940	May 14, 2015
Network Analyzer Anritsu 37347C	002106	Feb. 20, 2015

This page has been reviewed for content and attested to by signature within this document.

NCL Calibration Laboratories
Division of APREL Laboratories.

Calibration Results Summary

The following results relate the Calibrated Dipole and should be used as a quick reference for the user.

Mechanical Dimensions

Length: 52.4 mm
Height: 30.3 mm

Electrical Specification

Tissue	Frequency	SWR:	Return Loss	Impedance
Head	2450 MHz	1.014 U	-45.184 dB	50.006Ω
Body	2450 MHz	1.070 U	-29.453 dB	50.672 Ω

System Validation Results

Tissue	Frequency	1 Gram	10 Gram	Peak
Head	2450 MHz	54.916	25.327	111.97
Body	2450 MHz	52.418	24.691	103.91

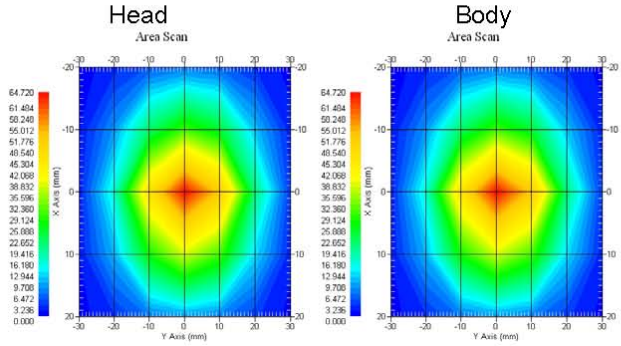

3

This page has been reviewed for content and attested to by signature within this document.

NCL Calibration Laboratories
Division of APREL Laboratories.

Introduction

This Calibration Report has been produced in line with the SSI Dipole Calibration Procedure SSI-TP-018-ALSAS. The results contained within this report are for Validation Dipole 220-00758. The calibration routine consisted of a three-step process. Step 1 was a mechanical verification of the dipole to ensure that it meets the mechanical specifications. Step 2 was an Electrical Calibration for the Validation Dipole, where the SWR, Impedance, and the Return loss were assessed. Step 3 involved a System Validation using the ALSAS-10U, along with APREL E-020 30 MHz to 6 GHz E-Field Probe Serial Number 225.

References

SSI-TP-018-ALSAS Dipole Calibration Procedure
SSI-TP-016 Tissue Calibration Procedure
IEEE 1528 "Recommended Practice for Determining the Peak Spatial-Average Specific Absorption Rate (SAR) in the Human Body Due to Wireless Communications Devices: Experimental Techniques"
IEC-62209 "Human exposure to radio frequency fields from hand-held and body-mounted wireless communication devices – Human models, instrumentation, and procedures"
Part 1: "Procedure to determine the Specific Absorption Rate (SAR) for hand-held devices used in close proximity of the ear (frequency range of 300 MHz to 3 GHz)"
IEC-62209 "Human exposure to radio frequency fields from hand-held and body-mounted wireless communication devices – Human models, instrumentation, and procedures"
Part 2 *Draft*: "Procedure to determine the Specific Absorption Rate (SAR) for hand-held devices used in close proximity of the ear (frequency range of 30 MHz to 6 GHz)"

Conditions

Dipole 220-00758 was a re-calibration.

Ambient Temperature of the Laboratory:	22 °C +/- 0.5°C
Temperature of the Tissue:	20 °C +/- 0.5°C

Dipole Calibration uncertainty

The calibration uncertainty for the dipole is made up of various parameters presented below.

Mechanical	1%
Positioning Error	1.22%
Electrical	1.7%
Tissue	2.2%
Dipole Validation	2.2%
TOTAL	**8.32% (16.64% K=2)**

This page has been reviewed for content and attested to by signature within this document.

NCL Calibration Laboratories
Division of APREL Laboratories.

Dipole Calibration Results

Mechanical Verification

APREL Length	APREL Height	Measured Length	Measured Height
51.5 mm	30.4 mm	52.4 mm	30.3 mm

Electrical Specification

Tissue	Frequency	SWR:	Return Loss	Impedance
Head	2450 MHz	1.014 U	-45.184 dB	50.006Ω
Body	2450 MHz	1.070 U	-29.453 dB	50.672 Ω

Tissue Validation

	Dielectric constant, ε_r	Conductivity, σ [S/m]
Head Tissue 2450MHz	37.26	1.84
Body Tissue 2450MHz	53.61	1.90

5

This page has been reviewed for content and attested to by signature within this document.

NCL Calibration Laboratories
Division of APREL Laboratories.

The Following Graphs are the results as displayed on the Vector Network Analyzer.

S11 Parameter Return Loss

Head: Frequency Range 2.390 to 2.517 GHz

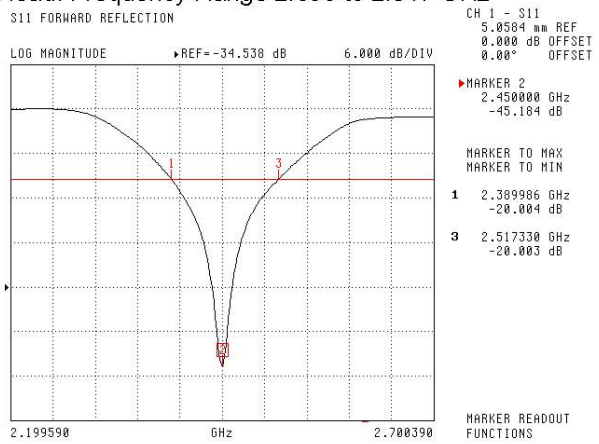

Body; Frequency Range 2.400 to 2.516 GHz

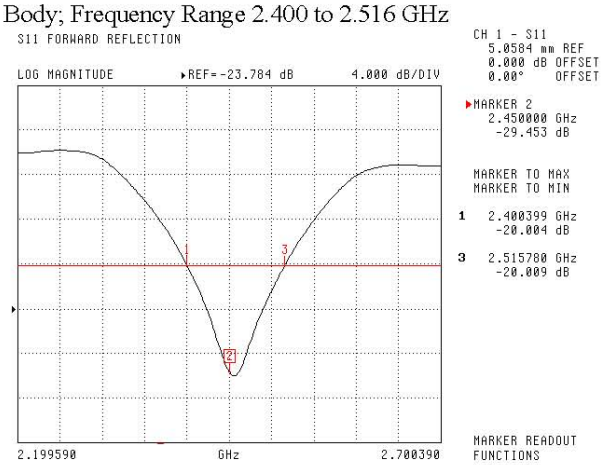

6

This page has been reviewed for content and attested to by signature within this document.

NCL Calibration Laboratories
Division of APREL Laboratories.

SWR

Head

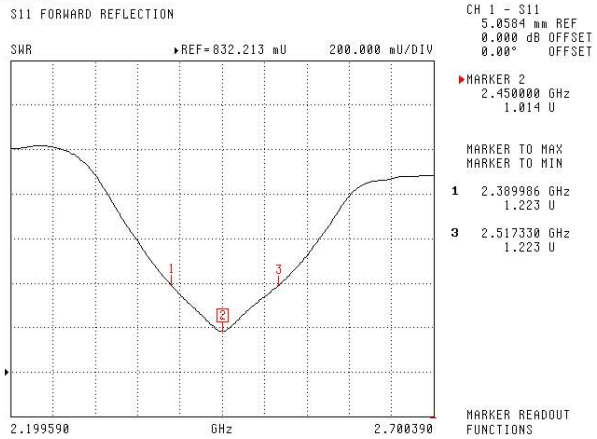

Body

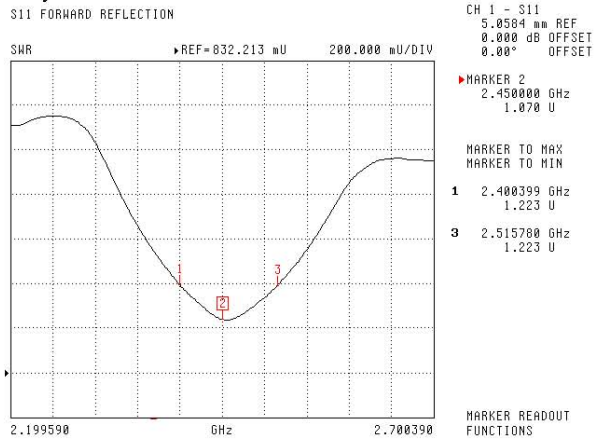

7

This page has been reviewed for content and attested to by signature within this document.

NCL Calibration Laboratories
Division of APREL Laboratories.

Smith Chart Dipole Impedance

Head

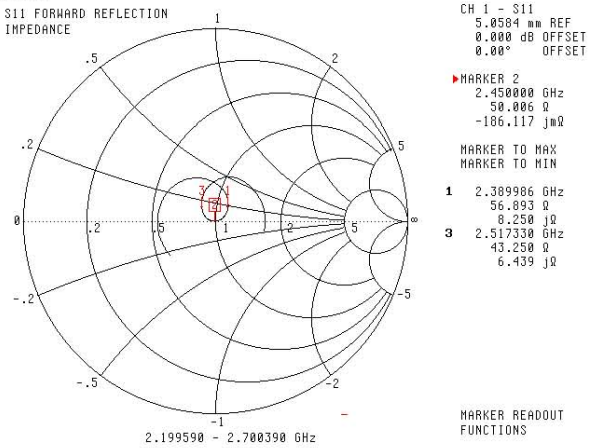

Body

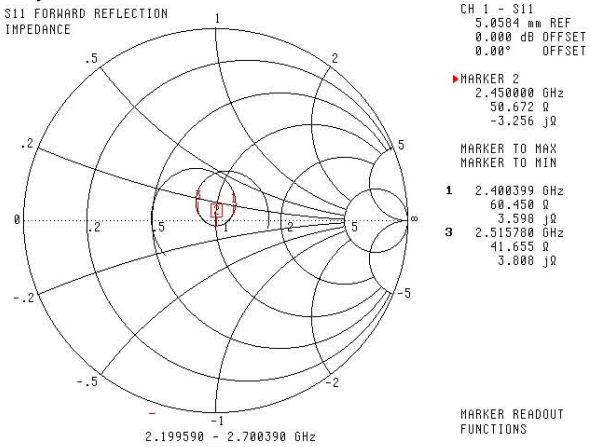

8

This page has been reviewed for content and attested to by signature within this document.

NCL Calibration Laboratories
Division of APREL Laboratories.

Test Equipment

The test equipment used during Probe Calibration, manufacturer, model number and, current calibration status are listed and located on the main APREL server R:\NCL\Calibration Equipment\Instrument List May 2014.

This page has been reviewed for content and attested to by signature within this document.

APPENDIX D EUT TEST POSITION PHOTOS

Liquid depth ≥ 15cm

Body-worn Back Setup Photo (10mm)

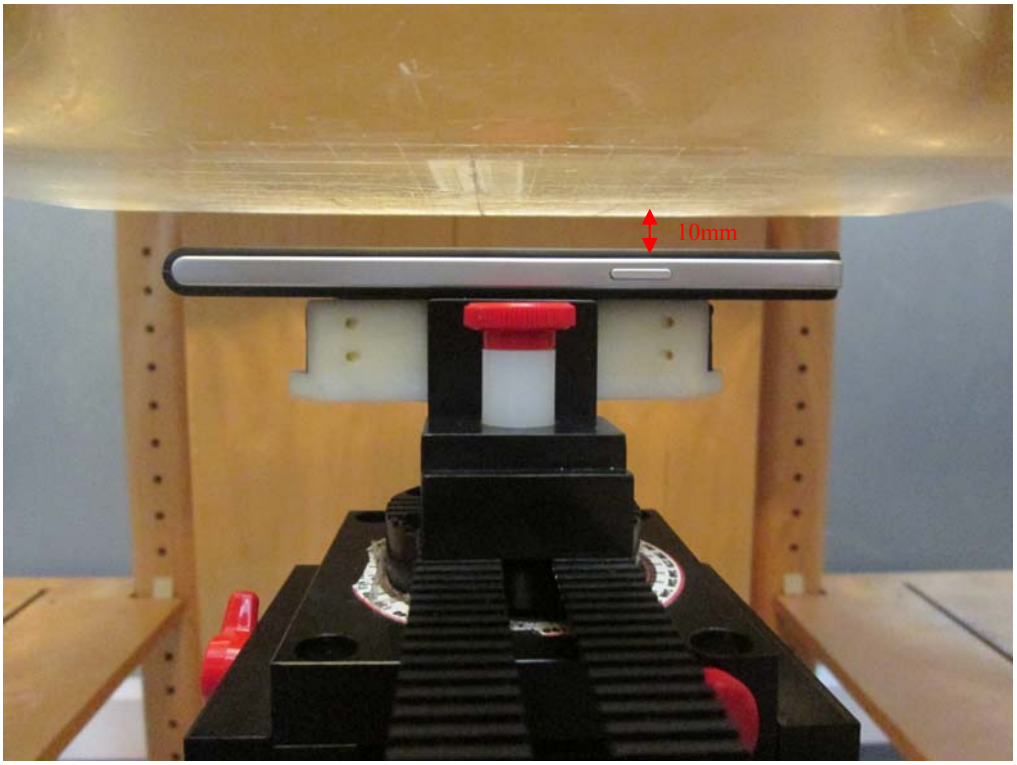

Body-worn Left Setup Photo (10mm)

Body-worn Right Setup Photo (10mm)

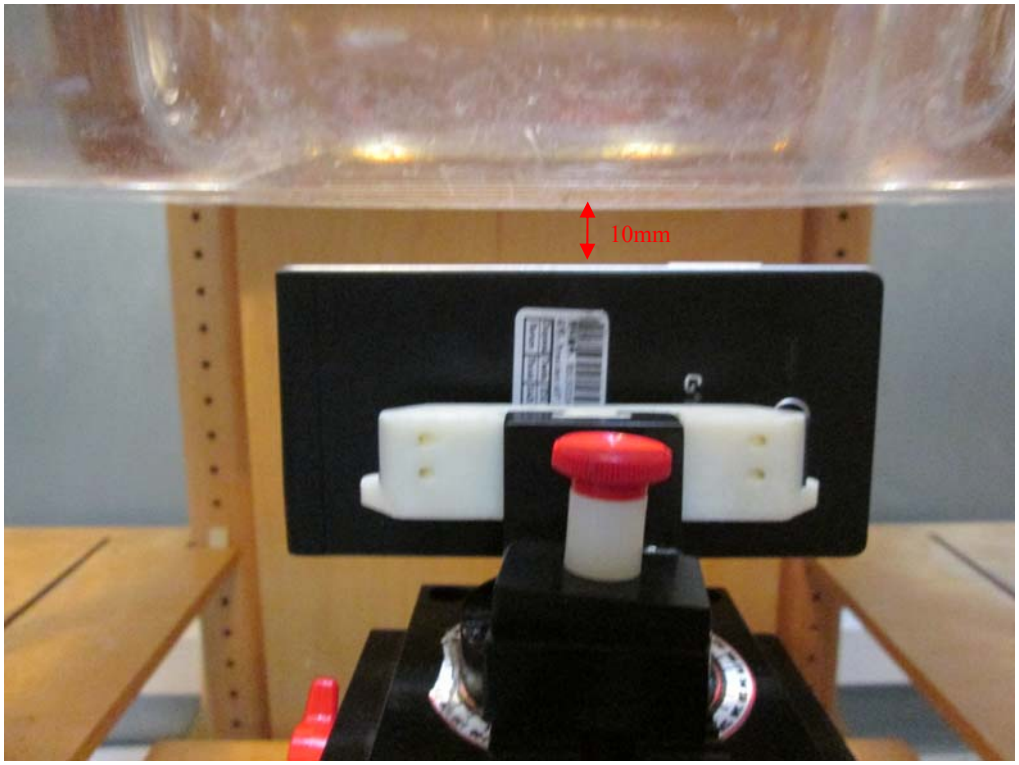

Body-worn Top Setup Photo (10mm)

Left Head Cheek Setup Photo

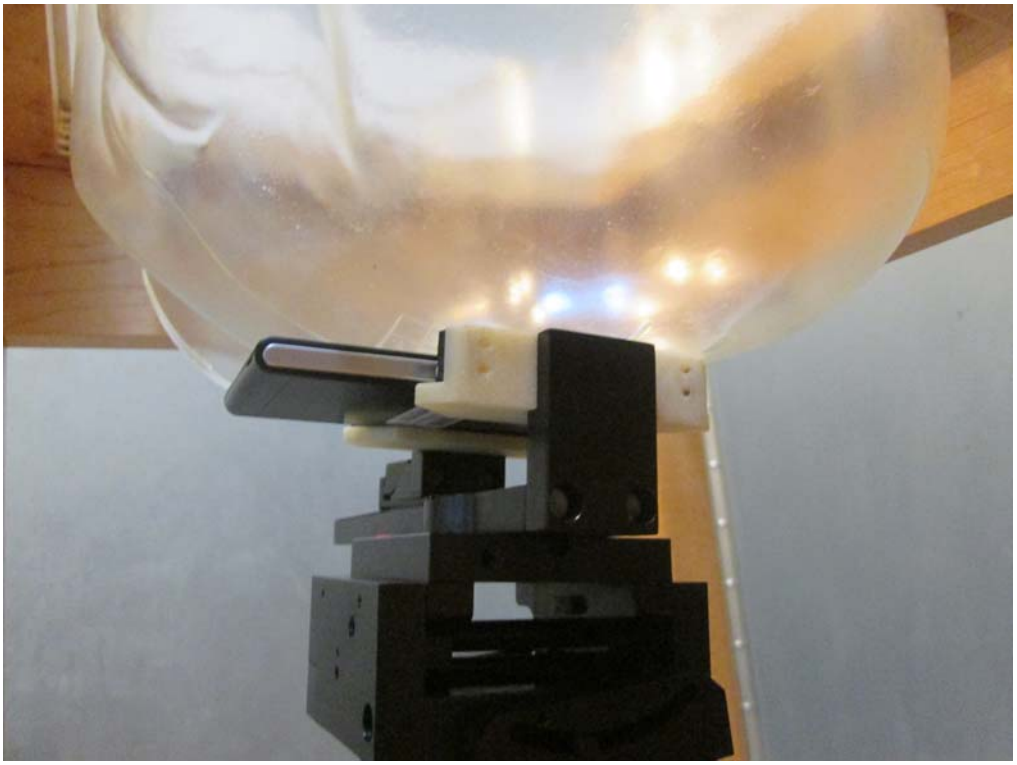

Left Head Tilt Setup Photo

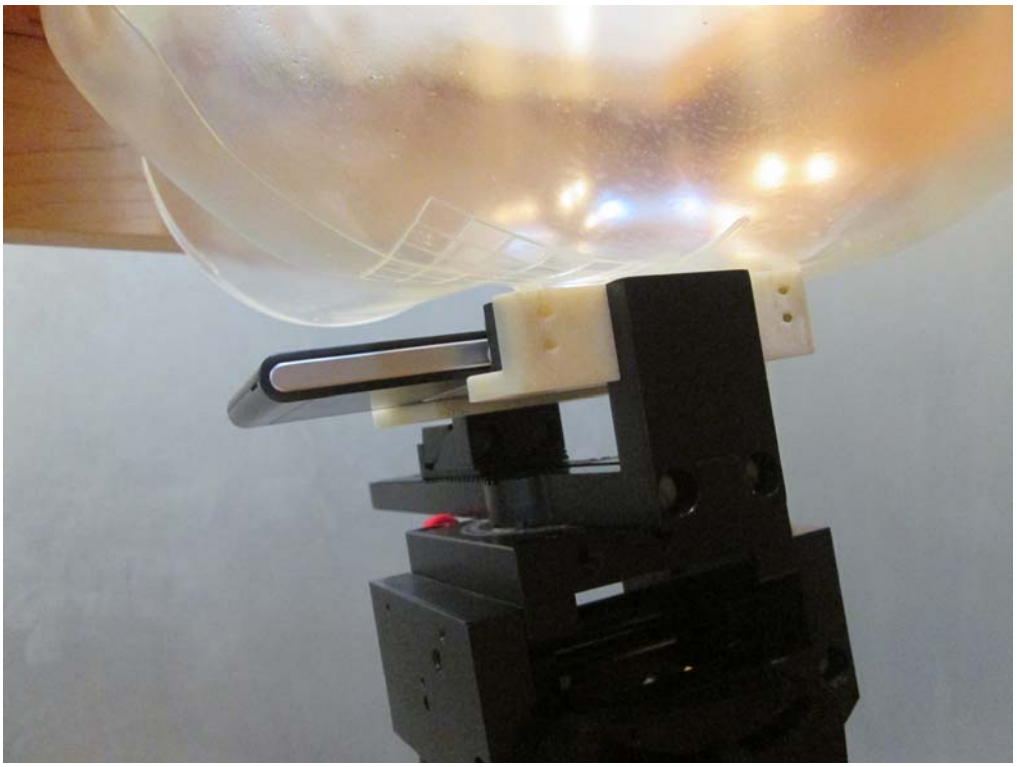

Right Head Cheek Setup Photo

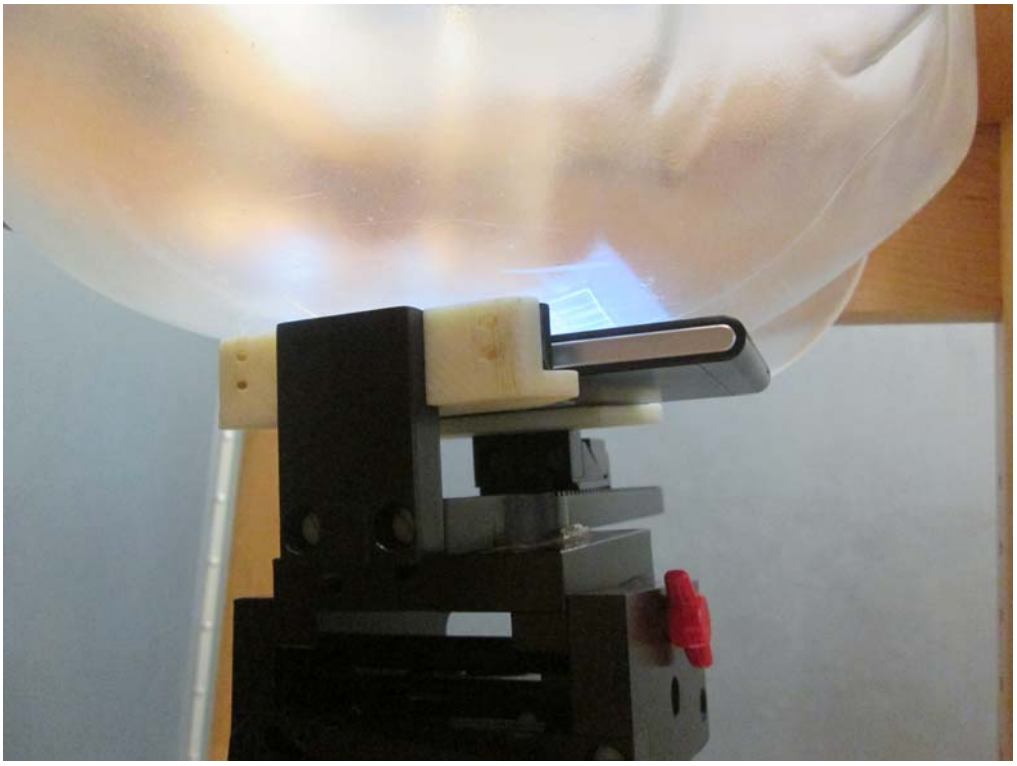

Right Head Tilt Setup Photo

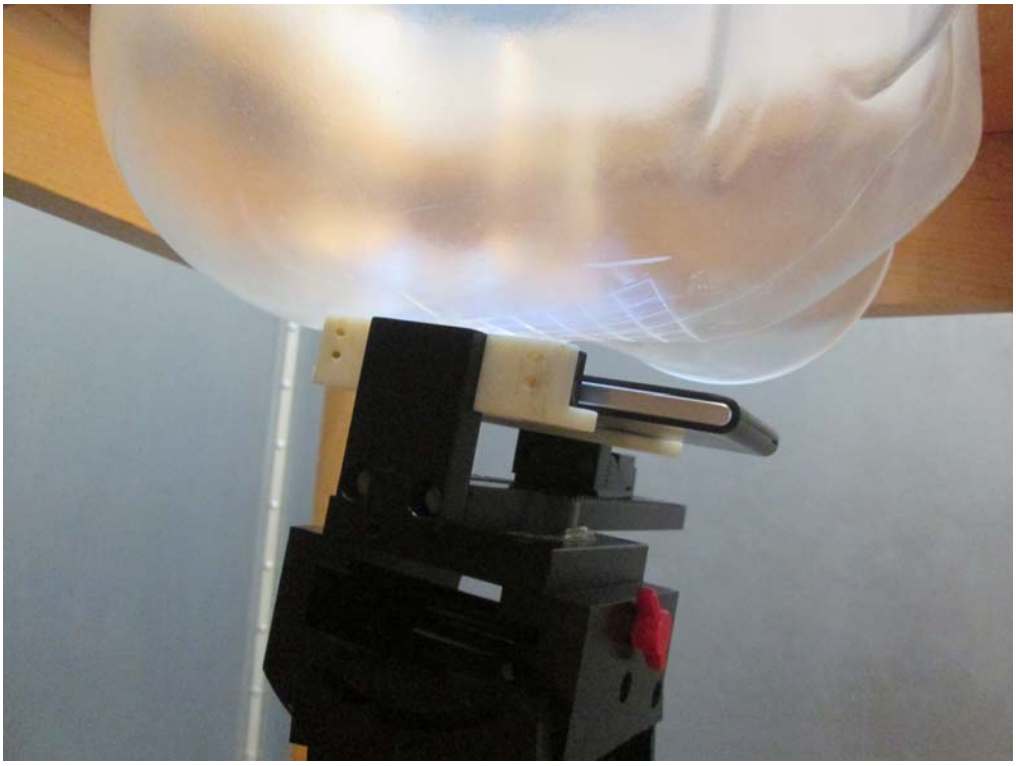

APPENDIX E EUT PHOTOS

EUT – Front View

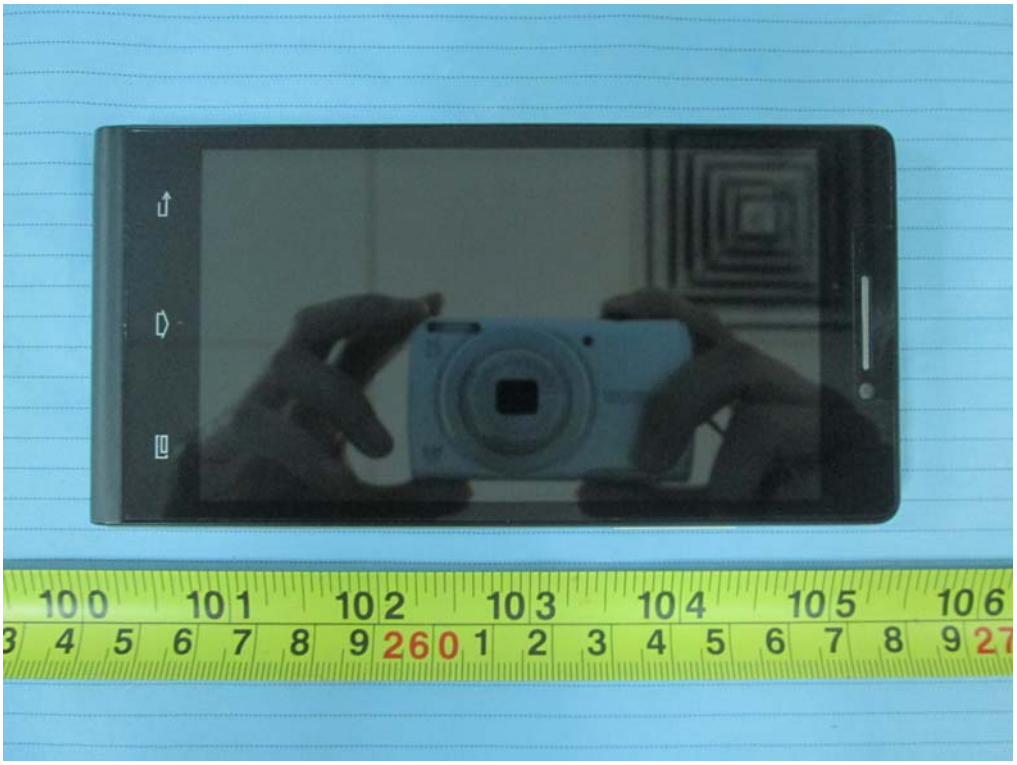

EUT – Back View

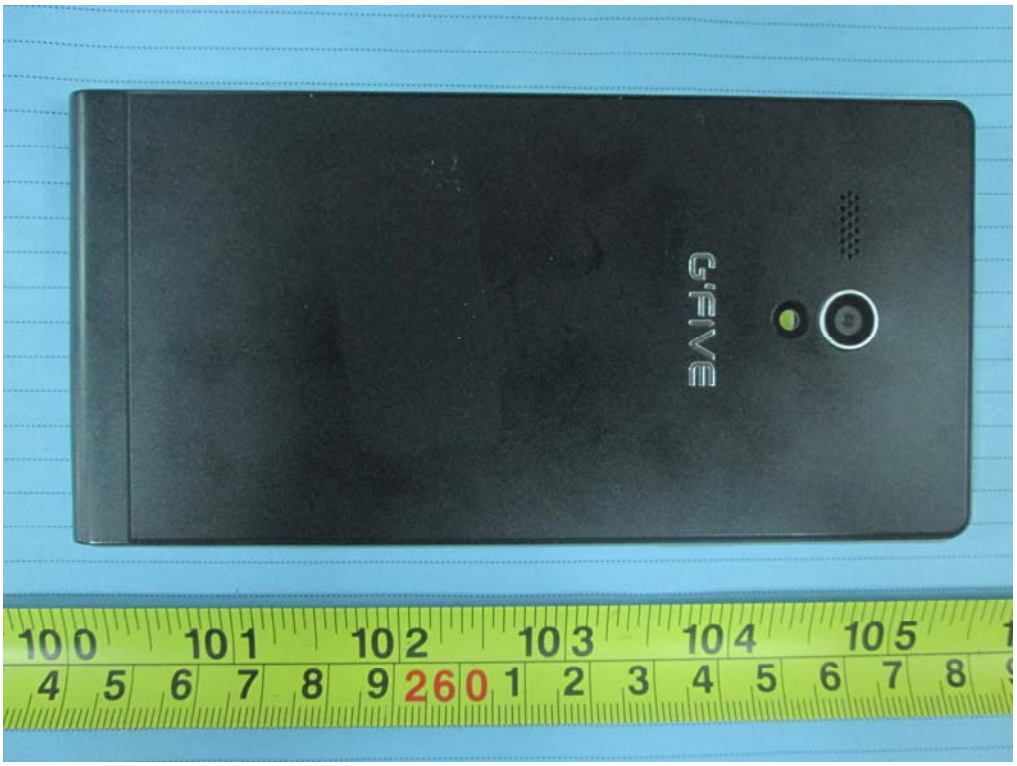

EUT – Left Side View

EUT – Right Side View

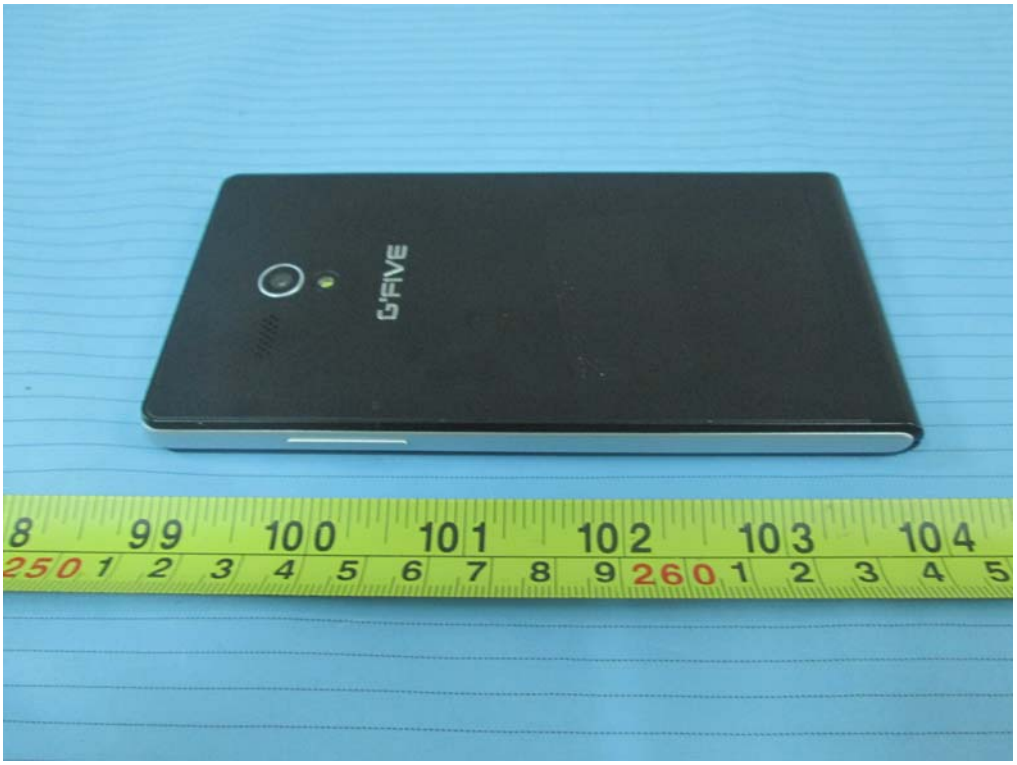

EUT – Top View

EUT – Bottom View

EUT – Uncover View

APPENDIX F INFORMATIVE REFERENCES

[1] Federal Communications Commission, \Report and order: Guidelines for evaluating the environmental effects of radiofrequency radiation", Tech. Rep. FCC 96-326, FCC, Washington, D.C. 20554, 1996.

[2] David L. Means Kwok Chan, Robert F. Cleveland, \Evaluating compliance with FCC guidelines for human exposure to radiofrequency electromagnetic fields", Tech. Rep., Federal Communication Commission, O_ce of Engineering & Technology, Washington, DC, 1997.

[3] Thomas Schmid, Oliver Egger, and Niels Kuster, \Automated E-_eld scanning system for dosimetricPage 111 of 111
assessments", IEEE Transactions on Microwave Theory and Techniques, vol. 44, pp. 105{113, Jan. 1996.

[4] Niels Kuster, Ralph K.astle, and Thomas Schmid, \Dosimetric evaluation of mobile communications equipment with known precision", IEICE Transactions on Communications, vol. E80-B, no. 5, pp. 645{652, May 1997.

[5] CENELEC, \Considerations for evaluating of human exposure to electromagnetic fields (EMFs) from mobile telecommunication equipment (MTE) in the frequency range 30MHz - 6GHz", Tech. Rep., CENELEC, European Committee for Electrotechnical Standardization, Brussels, 1997.

[6] ANSI, ANSI/IEEE C95.1-1992: IEEE Standard for Safety Levels with Respect to Human Exposure to Radio Frequency Electromagnetic Fields, 3 kHz to 300 GHz, The Institute of Electrical and Electronics Engineers, Inc., New York, NY 10017, 1992.

[7] Katja Pokovic, Thomas Schmid, and Niels Kuster, \Robust setup for precise calibration of E-field probes in tissue simulating liquids at mobile communications frequencies", in ICECOM _ 97, Dubrovnik, October 15{17, 1997, pp. 120-24.

[8] Katja Pokovic, Thomas Schmid, and Niels Kuster, \E-field probe with improved isotropy in brain simulating liquids", in Proceedings of the ELMAR, Zadar, Croatia, 23{25 June, 1996, pp. 172-175.

[9] Volker Hombach, Klaus Meier, Michael Burkhardt, Eberhard K. uhn, and Niels Kuster, \The depen-dence of EM energy absorption upon human head modeling at 900 MHz", IEEE Transactions on Microwave Theory and Techniques, vol. 44, no. 10, pp. 1865-1873, Oct. 1996.

[10] Klaus Meier, Ralf Kastle, Volker Hombach, Roger Tay, and Niels Kuster, \The dependence of EM energy absorption upon human head modeling at 1800 MHz", IEEE Transactions on Microwave Theory and Techniques, Oct. 1997, in press.

[11] W. Gander, Computermathematik, Birkhaeuser, Basel, 1992.

[12] W. H. Press, S. A. Teukolsky,W. T. Vetterling, and B. P. Flannery, Numerical Recepies in C, The Art of Scientific Computing, Second Edition, Cambridge University Press, 1992.Dosimetric Evaluation of Sample device, month 1998 9

[13] NIS81 NAMAS, \The treatment of uncertainity in EMC measurement", Tech. Rep., NAMAS Executive, National Physical Laboratory, Teddington, Middlesex, England, 1994.

[14] Barry N. Taylor and Christ E. Kuyatt, \Guidelines for evaluating and expressing the uncertainty of NIST measurement results", Tech. Rep., National Institute of Standards and Technology, 1994. Dosimetric Evaluation of Sample device, month 1998 10.

******* END OF REPORT *******