Date
January 24,2022

For Radio Certification

Specifications / User Manual

24GHz Sensor Module

Model No. NJR4274

Copyright ©

Nisshinbo Micro Devices Inc.

Microwave Business Headquarters

-Notice of Proprietary Information-

This document and contents are proprietary to Nisshinbo Micro Devices Inc.

This publication and contents may not be reproduced or distributed for any other purpose without the written permission of Nisshinbo Micro Devices Inc.

Specifications listed in this document are subject to change at any time, without notice.

Scope

NJR4274 K-band (24GHz) Doppler Module has been designed for motion sensing applications.

Main Structure

- Integrated antenna structure, the patch antenna is integrated on the module PCB.
- All of electric parts except interface connector are covered with metal cap.

Operation Overview

- 5 V input operation, LDO integrated.
- Implemented an internal MCU for RF frequency tuning of RF-IC and intermittent-operation.
- Internal MCU controls ON/OFF of Output voltage from LDO which connect to the input voltage terminal of RF IC.
- This module is 2-frequencies CW (FSK) type sensor that can simultaneously measure the distance and velocity of the moving target. It operates duty cycle of intermittent-operation has 2-operation-mode (Normal operation mode / Low power operation mode). 2-operation-mode are different duty cycle. (refer Fig.2)
- RF frequency is output during ON time.
- Internal MCU supplies the tuning voltage to RFIC and the RF frequency is controlled by tuning voltage.
- Since the RF frequency is switched every intermittent-operation cycle, the tuning voltage is switched every cycle.
- Switched RF frequency is 2-frequencies, and difference of those 2-frequencies is 15 MHz +/- 3 MHz.

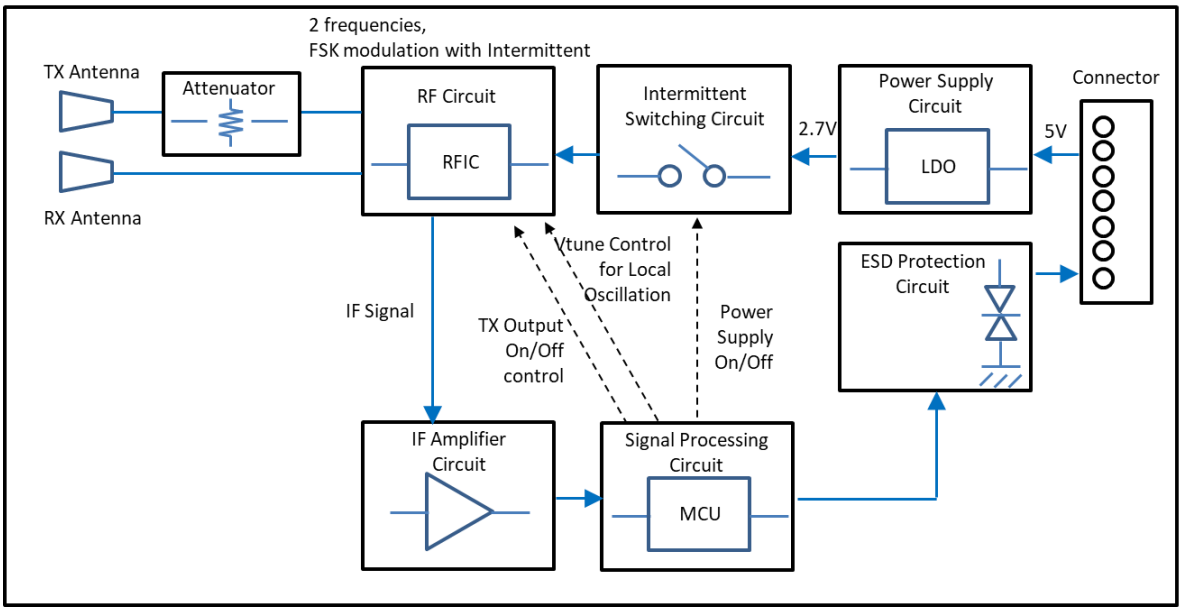

Fig.1 Functional Block Diagram

∗Above specifications are subject to change without notice.

Electrical Specifications

ITEM	MIN.	TYP.	MAX.	UNITS	REMARKS
1.1. Power Supply					
(1) Operating Voltage	4.75	5	5.25	V	
(2) Operating Current					
Normal Operation Mode	—	—	50	mA	
Low Power Mode	—	—	6	mA	
1.2. RF Parameter					
(1) RF Frequency (Transmission)					
for US, Canada, Taiwan and Korea	24.05	—	24.25	GHz	Refer Chart 1.
(2) Transmission Operation Mode	2-Frequencies CW(FSK)				
(3) Frequency Difference of FSK	—	15	—	MHz	
(4) Output Power	—	1.8	—	dBm	
(5) E.I.R.P.	—	—	10 (10)	mW (dBm)	
(7) Spurious Emission	—	—	2,500	uW/m	
(8) Antenna.					
Antenna Gain	—	6.5	6.7	dBi	
-3dB beam width / Horizontal	—	45	—	deg.	
-3dB beam width / Vertical	—	40	—	deg.	

∗Above specifications are subject to change without notice.

Chart 1. Frequency Channel List

Unit: GHz

		Lower Frequency (F1)			Higher Frequency (F2)			Remark
		min	norminal	max	min	norminal	max	
L-band	ch1	24.052	24.057	24.061	24.067	24.072	24.076	The channel is automatically set by the carrier sense function. This band is not used in products for CE.
	ch2	24.055	24.060	24.064	24.070	24.075	24.079	
	ch3	24.058	24.063	24.067	24.073	24.078	24.082	
	ch4	24.061	24.066	24.070	24.076	24.081	24.085	
	ch5	24.064	24.069	24.073	24.079	24.084	24.088	
	ch6	24.082	24.087	24.091	24.097	24.102	24.106	
	ch7	24.085	24.090	24.094	24.100	24.105	24.109	
	ch8	24.088	24.093	24.097	24.103	24.108	24.112	
	ch9	24.091	24.096	24.100	24.106	24.111	24.115	
	ch10	24.094	24.099	24.103	24.109	24.114	24.118	
	ch11	24.112	24.117	24.121	24.127	24.132	24.136	
	ch12	24.115	24.120	24.124	24.130	24.135	24.139	
	ch13	24.118	24.123	24.127	24.133	24.138	24.142	
	ch14	24.121	24.126	24.130	24.136	24.141	24.145	
	ch15	24.124	24.129	24.133	24.139	24.144	24.148	
H-band	ch16	24.152	24.157	24.161	24.167	24.172	24.176	The channel is automatically set by the carrier sense function.
	ch17	24.155	24.160	24.164	24.170	24.175	24.179	
	ch18	24.158	24.163	24.167	24.173	24.178	24.182	
	ch19	24.161	24.166	24.170	24.176	24.181	24.185	
	ch20	24.164	24.169	24.173	24.179	24.184	24.188	
	ch21	24.182	24.187	24.191	24.197	24.202	24.206	
	ch22	24.185	24.190	24.194	24.200	24.205	24.209	
	ch23	24.188	24.193	24.197	24.203	24.208	24.212	
	ch24	24.191	24.196	24.200	24.206	24.211	24.215	
	ch25	24.194	24.199	24.203	24.209	24.214	24.218	
	ch26	24.212	24.217	24.221	24.227	24.232	24.236	
	ch27	24.215	24.220	24.224	24.230	24.235	24.239	
	ch28	24.218	24.223	24.227	24.233	24.238	24.242	
	ch29	24.221	24.226	24.230	24.236	24.241	24.245	
	ch30	24.224	24.229	24.233	24.239	24.244	24.248	

∗Above specifications are subject to change without notice.

- Normal Operation Mode

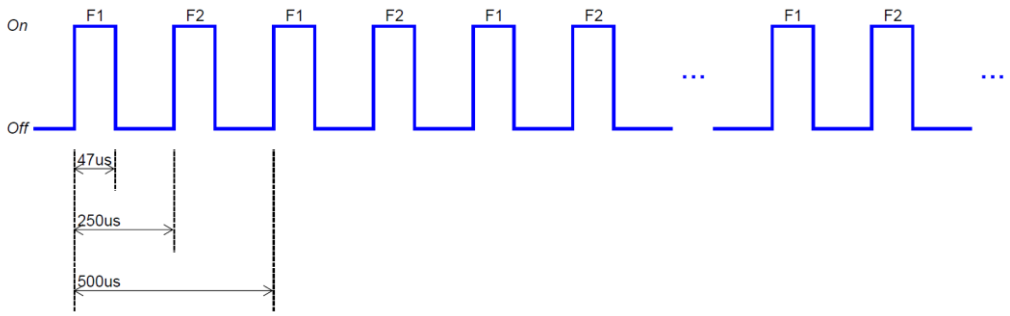

Notes: In normal mode, the modules transmit alternately at frequencies F1 and F2. A period of F1 and F2 has each 500us. Both transmit ON-time is 47us, OFF-times is 453us. F2 is started to transmit delayed 250us after F1 transmit.

- Low Power Operation Mode

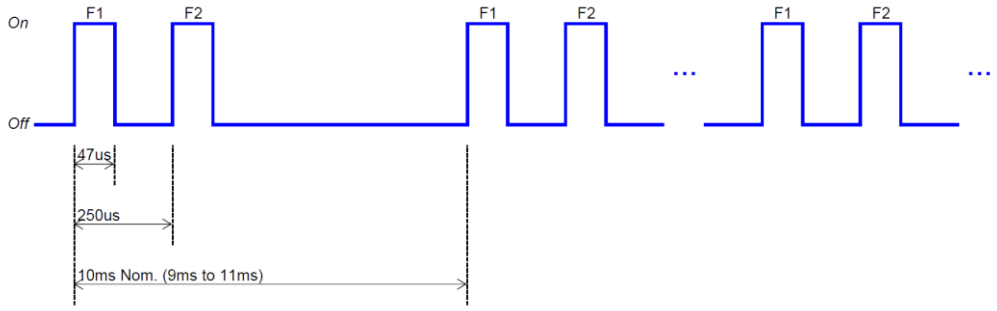

Notes: In Low Power Operation mode, the modules transmit alternately at frequencies F1 and F2.
A period of F1 and F2 has each 10ms nominal, range 9 to 11ms.
Both transmit ON-time is 47us, F2 is started to transmit delayed 250us after F1 transmit.

Fig.2 Frequency Time Chart

∗Above specifications are subject to change without notice.

1. Environmental Specifications

ITEM	SPECIFICATION
Operation Temperature	-10 to +41 °C
Storage Temperature	-30 to +70 °C
Humidity	0 to 64 % @+41 °C

∗Above specifications are subject to change without notice.

2. Drawing

2.1. Outline

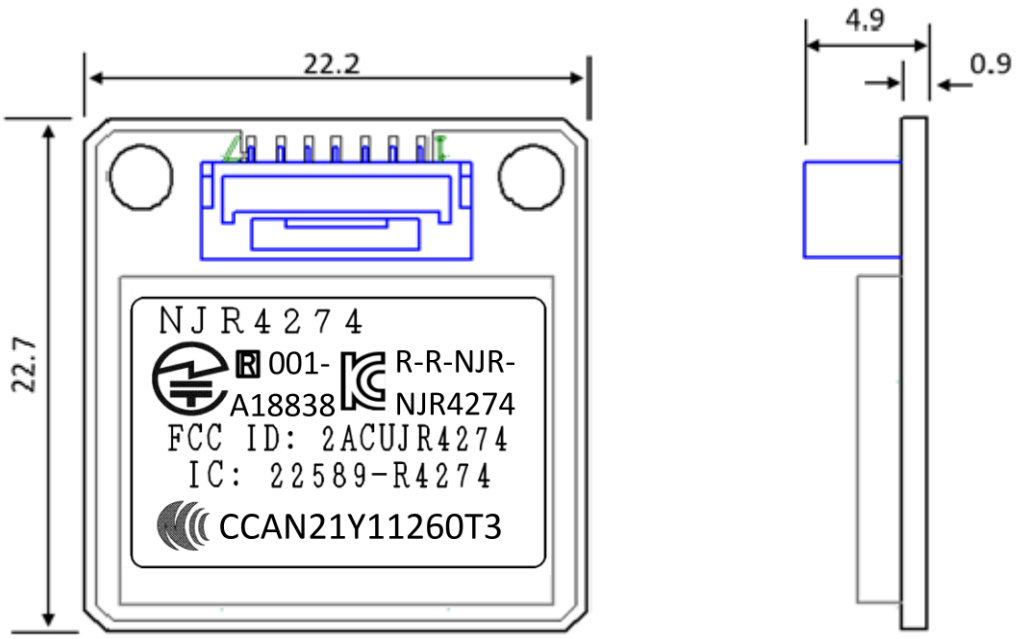

2.2. Interface

(1) Connector: BM07B-GHS-TBT / J. S. T. MFG. CO., LTD.

(2) Pin Assignment

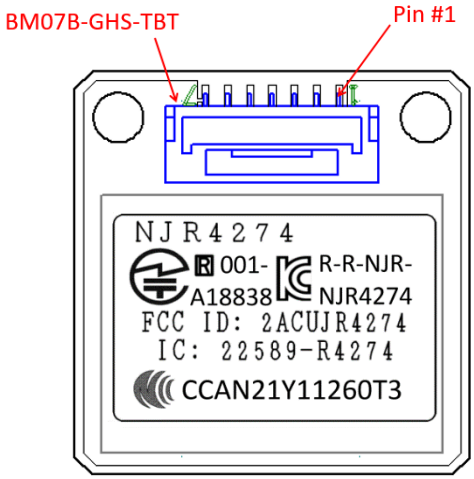

#	NAME	I/O	DESCRIPTION
1	Vcc	I	+5 V Input
2	TxD	O	Serial Communication Tx Port
3	RxD	I	Serial Communication Rx Port
4	GND	—	GND
5	TxD	O	Serial Communication Internal AD value is output
6	N/A	I	Do not connect, Internal Usage
7	N/A	I	Do not connect, Internal Usage

∗Above specifications are subject to change without notice.

2.3. Label Drawing

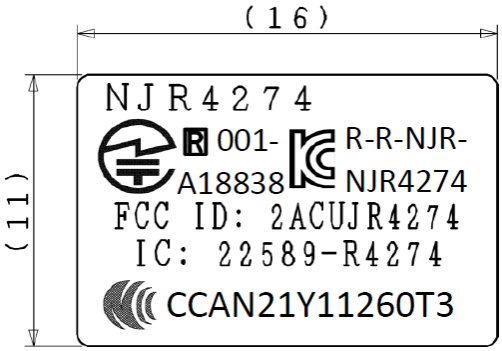

∗Above specifications are subject to change without notice.

Caution

1. Nissinbo Micro Devices strives to produce reliable and high quality microwave components. Nissinbo Micro Devices's microwave components are intended for specific applications and require proper maintenance and handling. To enhance the performance and service of Nissinbo Micro Devices's microwave components, the devices, machinery or equipment into which they are integrated should undergo preventative maintenance and inspection at regularly scheduled intervals. Failure to properly maintain equipment and machinery incorporating these products can result in catastrophic system failures.

2. To ensure the highest levels of reliability, Nissinbo Micro Devices products must always be properly handled. The introduction of external contaminants (e.g. dust, oil or cosmetics) can result in failures of microwave components.

3. Nissinbo Micro Devices offers a variety of microwave components intended for particular applications. It is important that you select the proper component for your intended application. You may contact Nissinbo Micro Devices 's sales office or sales representatives, if you are uncertain about the products listed in the catalog and the specification sheets.

4. Special care is required in designing devices, machinery or equipment, which demand high levels of reliability. This is particularly important when designing critical components or systems whose foreseeable failure can result in situations that could adversely affect health or safety. In designing such critical devices, equipment or machinery, careful consideration should be given to, amongst other things, their safety design, fail-safe design, back-up and redundancy systems, and diffusion design.

∗Above specifications are subject to change without notice.

5. The products listed in the catalog and specification sheets may not be appropriate for use in certain equipment where reliability is critical or where the products may be subjected to extreme conditions. You should consult our sales office or sales representatives before using the products in any of the following types of equipment.
   * Aerospace Equipment
   * Equipment Used in the Deep Sea
   * Power Generator Control Equipment (nuclear, steam, hydraulic)
   * Life Maintenance Medical Equipment
   * Fire Alarm/Intruder Detector
   * Vehicle Control Equipment (automobile, airplane, railroad, ship, etc.)
   * Various Safety Equipment

   This sensor module is NOT intended to be used in motor vehicles nor aircraft.
   Additional considerations are required for use in such environments.
   You (i.e. Host integrator of this module) must consult detail our sales office or sales representatives beforehand.

6. Nissinbo Micro Devices 's products have been designed and tested to function within controlled environmental conditions. Do not use products under conditions that deviate from methods or applications specified in the catalog and specification sheets. Failure to employ Nissinbo Micro Devices 's products in the proper applications can lead to deterioration, destruction or failure of the products. Nissinbo Micro Devices shall not be responsible for any bodily injury, fires or accidents, property damage or any consequential damages resulting from the misuse or misapplication of its products. PRODUCTS ARE SOLD WITHOUT WARRANTY OF ANY OF KIND, EITHER EXPRESS OR IMPLIED, INCLUDING BUT NOT LIMITED TO ANY IMPLIED WARRANTY OF MERCHANTABILITY OR FITNESS FOR A PARTICULAR PURPOSE.

7. The product specifications and descriptions listed in the catalog and specification sheets are subject to change at any time, without notice.

FCC Statement

Appendix)

FCC Statements of 2ACUJR4274

Responsible party:

Nissinbo Micro Device Inc.
1-1, Fukuoka 2-Chome Fujimino-City
Saitama Prefecture 356-8510 Japan
Tel: +81-49-278-1271, Fax: +81-49-278-1234

This device complies with Part 15 of the FCC rules. Operation is a subject to the following two conditions:

(1) This device may not cause harmful interference.
(2) This device must accept any interference received, including interference that may cause undesired operation.

Caution

DC power supply for each module should be conformed to the electrical specifications as described in this section. **A host in which a module is integrated should provide stable DC power through suitable regulator circuit to the module.**

NOTE:

Changes or modifications to the device not expressly approved by the party responsible for compliance could void the user's authority to operate the equipment(s).

This equipment has been tested and found to comply with the limits for a Class B digital device, pursuant to part 15 of the FCC Rules. These limits are designed to provide reasonable protection against harmful interference in a residential installation. This equipment generates, uses and can radiate radio frequency energy and, if not installed and used in accordance with the instructions, may cause harmful interference to radio communications. However, there is no guarantee that interference will not occur in a particular installation. If this equipment does cause harmful interference to radio or television reception, which can be determined by turning the equipment off and on, the user is encouraged to try to correct the interference by one or more of the following measures:

- Reorient or relocate the receiving antenna.
- Increase the separation between the equipment and receiver.
- Connect the equipment into an outlet on a circuit different from that to which the receiver is connected.
- Consult the dealer or an experienced radio/TV technician for help.

The equipment complies with radio frequency exposure limits set forth by the FCC for an uncontrolled environment.
The device must not be co-located or operating in conjunction with any other antenna or transmitter.

Appedix)

WARNING:

The FCC regulations provide that changes or modifications not expressly approved by the party responsible for compliance could void the user's authority to operate the equipment.

Limitation for use of the modules:

When the module is installed in a host product, the module shall be connected directly to a PCB of the host product. It shall NOT be extended by any cable. DC power supply for each module must strictly be conformed to each electrical specification as described in the section 1 of this document.

Manual and Product Labeling information to the End User:

End user manual must include all required regulatory information and/or warning as show in this manual.
OEM Integrator must indicate "Contain FCC ID: 2ACUJR4274" at the outside of a host product such as label when the module is installed in the host product.

The following statement from FCC §15.19 (a) (3) is required on the label of the host equipment.

This device complies with Part 15 of the FCC Rules. Operation is subject to the following two conditions:

(1) this device may not cause harmful interference, and
(2) this device must accept any interference received, including interference that may cause undesired operation.

OEM Integrator may be sure that the End user manual may not contain any information about the way to install or remove the modules from the host product.

APPLICABLE MODEL:

This FCC Statement is valid only for the following model number:
NJR4274

ISED Statement

Note:
This device complies with Industry Canada's license-exempt RSSs. Operation is subject to the following two conditions:

(1) this device may not cause interference; and
(2) this device must accept any interference, including interference that may cause undesired operation of the device.

Le présent appareil est conforme aux CNR d'Industrie Canada applicables aux appareils radio exempts de licence. L'exploitation est autorisée aux deux conditions suivantes:

(1) l'appareil ne doit pas produire de brouillage;
(2) l'utilisateur de l'appareil doit accepter tout brouillage radioélectrique subi, même si le brouillage est susceptible d'en compromettre le fonctionnement.

Manual and Product Labeling information to The End User:
The end user manual shall include all required regulatory information/warning as show in this manual.
And when this module is installed in the host product, you must include a "Contains IC: 22589-R4274" in the label of the host product.

RF Exposure Statement (For FCC)

This equipment complies with radio frequency exposure limits set forth by the FCC for an uncontrolled environment. This equipment should be installed and operated with a minimum distance of 2.0 cm between the device and the user or bystanders. This device must not be co-located or operating in conjunction with any other antenna or transmitter.

RF Exposure Statement (For ISED)

This equipment complies with radio frequency exposure limits set forth by Industry Canada for an uncontrolled environment. This equipment should be installed and operated with a minimum distance of 5.0 cm between the device and the user or bystanders. This device must not be co-located or operating in conjunction with any other antenna or transmitter.

Cet équipement est conforme aux limites d'exposition aux radiofréquences définies par Industrie Canada pour un environnement non contrôlé. Cet équipement doit être installé et utilisé avec un minimum de 5.0 cm de distance entre le dispositif et l'utilisateur ou des tiers. Ce dispositif ne doit pas être utilisé à proxi