S T S LAB

FCC SAR TEST REPORT

Report No.: STS2008242H01

Issued for

Shenzhen ChangTaiWei Electronic CO., LTD

5/F.,6 Block, XinGu Industrial Zone, GuShu Village, XiXiang Town, BaoAn District, Shenzhen City, China

Product Name:	Walkie Talkie
Brand Name:	N/A
Model Name:	M-900
Series Model:	N/A
FCC ID:	2ACVFM-900
Test Standard:	ANSI/IEEE Std. C95.1
	FCC 47 CFR Part 2 (2.1093)
	IEEE 1528: 2013 IEEE C95.1- 2005 KDB 447498 KDB 865664
Max. Report SAR (1g):	Face up: 0.942 W/kg
	Back Touch: 1.118 W/kg

Any reproduction of this document must be done in full. No single part of this document may be reproduced without permission from STS, All Test Data Presented in this report is only applicable to presented Test sample.

ShenZhen STS Test Services Co.,Ltd.
A 1/F, Building B, Zhuoke Science Park, No.190 Chongqing Road, HepingShequ, Fuyong Sub-District, Bao'an District, Shenzhen, Guang Dong, China
TEL: +86-755 3688 6288 FAX: +86-755 3688 6277 E-mail:sts@stsapp.com

TESTING • CONSULTING • CERTIFICATION • APPROVAL

Test Report Certification

Applicant's name .....: Shenzhen ChangTaiWei Electronic CO., LTD

Address .....: 5/F.,6 Block, XinGu Industrial Zone, GuShu Village, XiXiang Town, BaoAn District, Shenzhen City, China

Manufacture's Name .....: Shenzhen ChangTaiWei Electronic CO., LTD

Address .....: 5/F.,6 Block, XinGu Industrial Zone, GuShu Village, XiXiang Town, BaoAn District, Shenzhen City, China

Product Description

Product Name.....: Walkie Talkie

Brand Name.....: N/A

Model Name .....: M-900

Series Model.....: N/A

Standards .....: RSS 102 Issue 5,March 2015, IEC 62209-2:2010
IEEE 1528:2013, IEEE C95.1- 2005
KDB 447498, KDB 865664

The device was tested by Shenzhen STS Test Services Co., Ltd. in accordance with the measurement methods and procedures specified in KDB 865664 The test results in this report apply only to the tested sample of the stated device/equipment. Other similar device/equipment will not necessarily produce the same results due to production tolerance and measurement uncertainties.

Date of Test .....:

Date (s) of performance of tests.....: 19 Aug. 2020

Date of Issue.....: 20 Aug. 2020

Test Result.....: **Pass**

Testing Engineer : Aaron Bu

(Aaron Bu)

Technical Manager : Sean She

(Sean She)

Authorized Signatory : Vita Li

(Vita Li)

Table of Contents

1. General Information **4**

1.1 EUT Description 4

1.2 Test Environment 5

1.3 Test Factory 5

2. Test Standards and Limits **6**

3. SAR Measurement System **7**

3.1 Definition of Specific Absorption Rate (SAR) 7

3.2 SAR System 7

4. Tissue Simulating Liquids **10**

4.1 Simulating Liquids Parameter Check 10

5. SAR System Validation **12**

5.1 Validation System 12

5.2 Validation Result 12

6. SAR Evaluation Procedures **13**

7. EUT Test Position **14**

8. Uncertainty **15**

8.1 Measurement Uncertainty 15

8.2 System validation Uncertainty 16

9. Conducted Power Measurement **17**

Test Result 17

10. EUT And Test Setup Photo **18**

10.1 EUT Photo 18

10.2 Setup Photo 21

11. SAR Result Summary **23**

11.1 Summary of Measurement Result 23

11.2 Repeated SAR 24

11.3 repeated SAR measurement 25

12. Equipment List **26**

Appendix A. System Validation Plots **27**

Appendix B. SAR Test Plots **29**

Appendix C. Probe Calibration and Dipole Calibration Report **35**

1. General Information

1.1 EUT Description

Equipment	Walkie Talkie			
Brand Name	N/A			
Model name	M-900			
Series Model	N/A			
Model Difference	N/A			
Device Category	Portable			
Product stage	Production unit			
RF Exposure Environment	Population/Uncontrolled			
Hardware Version	N/A			
Software Version	N/A			
Power Rating	DC 4.5V from AA*3 battery			
Frequency Range	GMRS	462.5625MHz-462.7125MHz(1~7 channel); 467.5625MHz-467.7125MHz (8~14 channel); 462.5500MHz-462.7250MHz(15~22 channel)		
Channel Spacing	25KHz			
Max. Reported SAR(1g):	with 50% duty cycle	Test Channel	Face up (W/kg)	Back Touch (W/kg)
		CH 2	0.533	0.865
		CH 8	0.454	0.844
		CH 15	0.942	1.118
Modulation Type:	GMRS	FM		
Antenna Specification:	Spring antenna / Internal			
Note: 1. The EUT battery must be fully charged and checked periodically during the test to ascertain uniform power				

1.2 Test Environment

Ambient conditions in the SAR laboratory:

Items	Required
Temperature (℃)	18-25
Humidity (%RH)	30-70

1.3 Test Factory

ShenZhen STS Test Services Co.,Ltd.

A 1/F, Building B, Zhuoke Science Park, No.190 Chongqing Road, HepingShequ, Fuyong Sub-District, Bao'an District, Shenzhen, Guang Dong, China

FCC Registration No.: 625569

A2LA Certificate No.: 4338.01

IC Registration No.: 12108A

2. Test Standards and Limits

No.	Identity	Document Title
1	47 CFR Part 2	Frequency Allocations and Radio Treaty Matters; General Rules and Regulations
2	ANSI/IEEE Std. C95.1-1992	IEEE Standard for Safety Levels with Respect to Human Exposure to Radio Frequency Electromagnetic Fields, 3 kHz to 300 GHz
3	IEEE Std. 1528-2013	Recommended Practice for Determining the Peak Spatial-Average Specific Absorption Rate (SAR) in the Human Head from Wireless Communications Devices: Measurement Techniques
4	FCC KDB 447498 D01 v06	Mobile and Portable Device RF Exposure Procedures and Equipment Authorization Policies
5	FCC KDB 865664 D01 v01r04	SAR Measurement 100 MHz to 6 GHz
6	FCC KDB 865664 D02 v01r02	RF Exposure Reporting
7	FCC KDB 643646 D001	SAR Test Reduction Considerations for Occupational PTT Radios

(A). Limits for Occupational/Controlled Exposure (W/kg)

Whole-Body	Partial-Body	Hands, Wrists, Feet and Ankles
0.4	8.0	20.0

(B). Limits for General Population/Uncontrolled Exposure (W/kg)

Whole-Body	Partial-Body	Hands, Wrists, Feet and Ankles
0.08	1.6	4.0

NOTE: Whole-Body SAR is averaged over the entire body, partial-body SAR is averaged over any 1 gram of tissue defined as a tissue volume in the shape of a cube. SAR for hands, wrists, feet and ankles is averaged over any 10 grams of tissue defined as a tissue volume in the shape of a cube.

Population/Uncontrolled Environments:

Are defined as locations where there is the exposure of individuals who have no knowledge or control of their exposure.

Occupational/Controlled Environments:

Are defined as locations where there is exposure that may be incurred by people who are aware of the potential for exposure, (i.e. as a result of employment or occupation).

NOTE

GENERAL POPULATION/UNCONTROLLED EXPOSURE

PARTIAL BODY LIMIT

8.0 W/kg

3. SAR Measurement System

3.1 Definition of Specific Absorption Rate (SAR)

SAR is related to the rate at which energy is absorbed per unit mass in an object exposed to a radio field. The SAR distribution in a biological body is complicated and is usually carried out by experimental techniques or numerical modeling. The standard recommends limits for two tiers of groups, occupational/controlled and general population/uncontrolled, based on a person's awareness and ability to exercise control over his or her exposure. In general, occupational/controlled exposure limits are higher than the limits for general population/uncontrolled.

The SAR definition is the time derivative (rate) of the incremental energy (dW) absorbed by (dissipated in) an incremental mass (dm) contained in a volume element (dv) of a given density (ρ). The equation description is as below:

$$\mathbf{SAR} = \frac{d}{dt}\left(\frac{dW}{dm}\right) = \frac{d}{dt}\left(\frac{dW}{\rho dv}\right)$$

SAR is expressed in units of Watts per kilogram (W/kg) SAR measurement can be related to the electrical field in the tissue by

$$\mathbf{SAR} = \frac{\sigma E^2}{\rho}$$

Where: σ is the conductivity of the tissue,
ρ is the mass density of the tissue and E is the RMS electrical field strength.

3.2 SAR System

MVG SAR System Diagram:

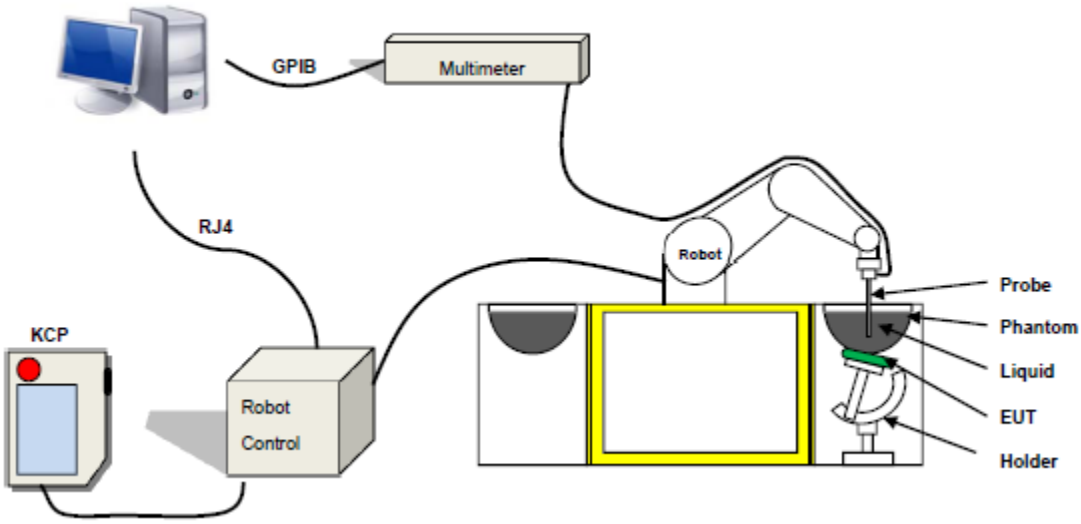

COMOSAR is a system that is able to determine the SAR distribution inside a phantom of human being according to different standards. The COMOSAR system consists of the following items:

- Main computer to control all the system
- 6 axis robot
- Data acquisition system
- Miniature E-field probe
- Phone holder
- Head simulating tissue

The following figure shows the system.

The EUT under test operating at the maximum power level is placed in the phone holder, under the phantom, which is filled with head simulating liquid. The E-Field probe measures the electric field inside the phantom. The Open SAR software computes the results to give a SAR value in a 1g or 10g mass.

3.2.1 Probe

For the measurements the Specific Dosimetric E-Field Probe SN 41/18 EPGO334 with following specifications is used
- Probe Length: 330 mm
- Length of Individual Dipoles: 2 mm
- Maximum external diameter: 8 mm
- Probe Tip External Diameter: 2.5 mm
- Distance between dipole/probe extremity: 1 mm
- Dynamic range: 0.01-100 W/kg
- Probe linearity: 3%
- Axial Isotropy: < 0.10 dB
- Spherical Isotropy: < 0.10 dB
- Calibration range: 450 MHz to 6 GHz for head & body simulating liquid.
- Angle between probe axis (evaluation axis) and surface normal line: less than 30°

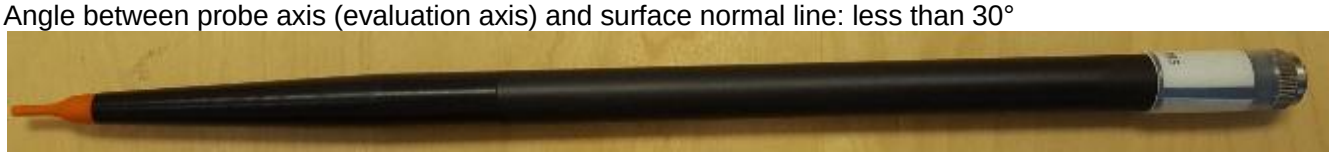

Figure 1-MVG COMOSAR Dosimetric E field Dipole

3.2.2 Phantom

For the measurements the Specific Anthropomorphic Mannequin (SAM) defined by the IEEE SCC-34/SC2 group is used. The phantom is a polyurethane shell integrated in a wooden table. The thickness of the phantom amounts to 2mm +/- 0.2mm. It enables the dosimetric evaluation of left and right phone usage and includes an additional flat phantom part for the simplified performance check. The phantom set-up includes a cover, which prevents the evaporation of the liquid.

Figure-SN 32/14 SAM115

Figure-SN 32/14 SAM116

3.2.3 Device Holder

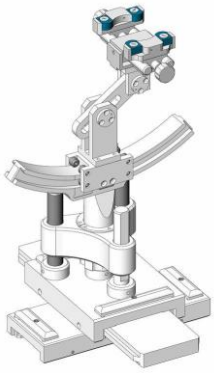

The SAR in the phantom is approximately inversely proportional to the square of the distance between the source and the liquid surface. For a source at 5 mm distance, a positioning uncertainty of ± 0.5 mm would produce a SAR uncertainty of ± 20 %. Accurate device positioning is therefore crucial for accurate and repeatable measurements. The positions in which the devices must be measured are defined by the standards.

4. Tissue Simulating Liquids

4.1 Simulating Liquids Parameter Check

The head tissue dielectric parameters recommended by the IEEE SCC-34/SC-2 in P1528 have been incorporated in the following table. These head parameters are derived from planar layer models simulating the highest expected SAR for the dielectric properties and tissue thickness variations in a human head. Other head and body tissue parameters that have not been specified in P1528 are derived from the tissue dielectric parameters computed from the 4-Cole-Cole equations described in Reference [12] and extrapolated according to the head parameters specified in P1528.

Frequency (MHz)	Bactericide	DGBE	HEC	NaCl	Sucrose	1,2-Propan ediol	X100	Water	Conductivity	Permittivity
	%	%	%	%	%	%	%	%	σ	εr
450	0.19		0.98	3.95	56.32			38.56	0.85	43.4
750	/	/	/	0.79	/	64.81	/	34.40	0.97	41.8
835	/	/	/	0.79	/	64.81	/	34.40	0.97	41.8
900	/	/	/	0.79	/	64.81	/	34.40	0.97	41.8
1800	/	13.84	/	0.35	/	/	30.45	55.36	1.38	41.0
1900	/	13.84	/	0.35	/	/	30.45	55.36	1.38	41.0
2000	/	7.99	/	0.16	/	/	19.97	71.88	1.55	41.1
2450	/	7.99	/	0.16	/	/	19.97	71.88	1.88	40.3
2600	/	7.99	/	0.16	/	/	19.97	71.88	1.88	40.3

Tissue dielectric parameters for head and body phantoms				
Frequency	ε_r		σ S/m	
	Head	Body	Head	Body
300	45.3	58.2	0.87	0.92
450	43.5	56.7	0.87	0.94
900	41.5	55.0	0.97	1.05
1450	40.5	54.0	1.20	1.30
1800	40.0	53.3	1.40	1.52
2450	39.2	52.7	1.80	1.95
3000	38.5	52.0	2.40	2.73
5800	35.3	48.2	5.27	6.00

LIQUID MEASUREMENT RESULTS

Date	Ambient condition		Head Simulating Liquid		Parameters	Target	Measured	Deviation [%]	Limited [%]
	Temp. [°C]	Humidity [%]	Frequency	Temp. [°C]					
2020-08-19	22.7	54	450 MHz	22.4	Permittivity:	43.5	42.87	-1.45	± 5
					Conductivity	0.87	0.85	-2.30	± 5

5. SAR System Validation

5.1 Validation System

Each MVG system is equipped with one or more system validation kits. These units, together with the predefined measurement procedures within the MVG software, enable the user to conduct the system performance check and system validation. System kit includes a dipole, and dipole device holder.

The system check verifies that the system operates within its specifications. It's performed daily or before every SAR measurement. The system check uses normal SAR measurement in the flat section of the phantom with a matched dipole at a specified distance. The system validation setup is shown as below.

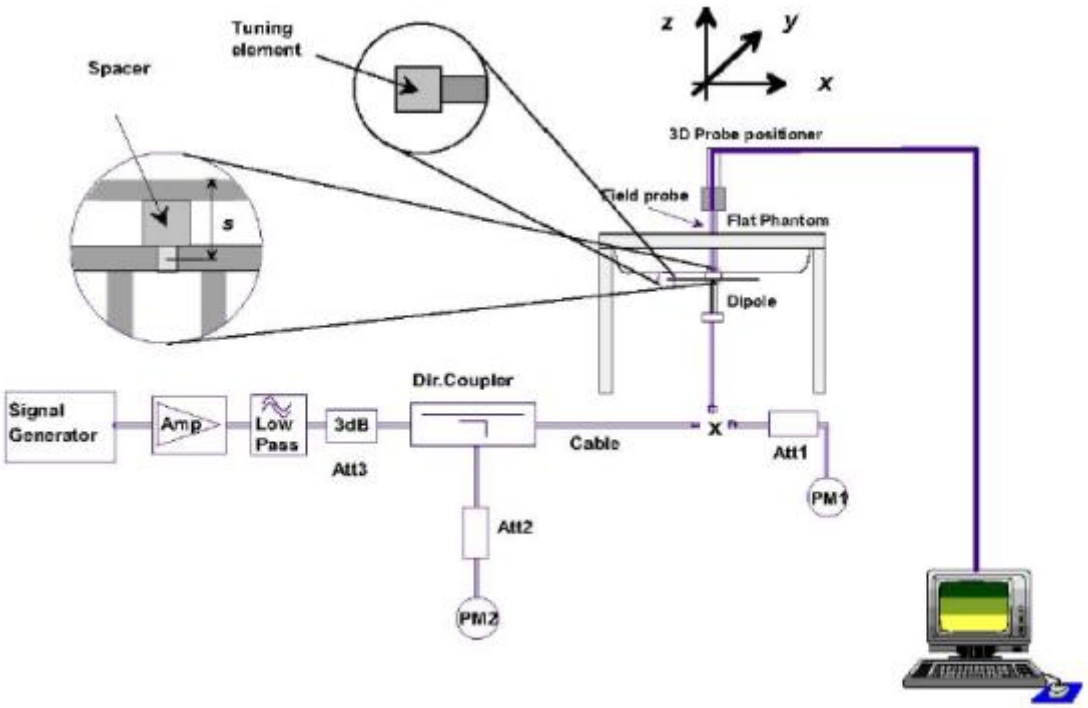

5.2 Validation Result

Comparing to the original SAR value provided by MVG, the validation data should be within its specification of 10 %.

Freq.(MHz)	Power(mW)	Tested Value (W/Kg)	Normalized SAR (W/kg)	Target(W/Kg)	Tolerance(%)	Date
450	100	0.484	4.84	4.58	5.68	2020-08-19

Note:

1. The tolerance limit of System validation ±10%.
2. The dipole input power (forward power) was 100 mW.
3. The results are normalized to 1 W input power.

6. SAR Evaluation Procedures

The procedure for assessing the average SAR value consists of the following steps:
The following steps are used for each test position
- Establish a call with the maximum output power with a base station simulator. The connection between the mobile and the base station simulator is established via air interface
- Measurement of the local E-field value at a fixed location. This value serves as a reference value for calculating a possible power drift.
- Measurement of the SAR distribution with a grid of 8 to 16mm * 8 to16 mm and a constant distance to the inner surface of the phantom. Since the sensors cannot directly measure at the inner phantom surface, the values between the sensors and the inner phantom surface are extrapolated. With these values the area of the maximum SAR is calculated by an interpolation scheme.
- Around this point, a cube of 30 * 30 * 30 mm or 32 * 32 * 32 mm is assessed by measuring 5 or 8 * 5 or 8*4 or 5 mm. With these data, the peak spatial-average SAR value can be calculated.

Area Scan& Zoom Scan:

First Area Scan is used to locate the approximate location(s) of the local peak SAR value(s). The measurement grid within an Area Scan is defined by the grid extent, grid step size and grid offset. Next, in order to determine the EM field distribution in a three-dimensional spatial extension, Zoom Scan is required. The Zoom Scan is performed around the highest E-field value to determine the averaged SAR -distribution over 10 g. Area scan and zoom scan resolution setting follows KDB 865664 D01v01r01 quoted below.
When the 1-g SAR of the highest peak is within 2 dB of the SAR limit, additional zoom scans are required for other peaks within 2 dB of the highest peak that have not been included in any zoom scan to ensure there is no increase in SAR.

7. EUT Test Position

This EUT was tested in Front Face and Rear Face.
Body-worn Position Conditions:
Body-worn accessory exposure is typically related to voice mode operations when handsets are carried in body-worn accessories. The body-worn accessory procedures in KDB Publication 447498 D01 should be used to test for body-worn accessory SAR compliance, without a headset connected to it. When the same wireless transmission configuration is used for testing body-worn accessory and hotspot mode SAR, respectively, in voice and data mode, SAR results for the most conservative *test separation distance* configuration may be used to support both SAR conditions. When the *reported* SAR for a body-worn accessory, measured without a headset connected to the handset, is > 1.2 W/kg, the highest *reported* SAR configuration for that wireless mode and frequency band should be repeated for the body-worn accessory with a headset attached to the handset.

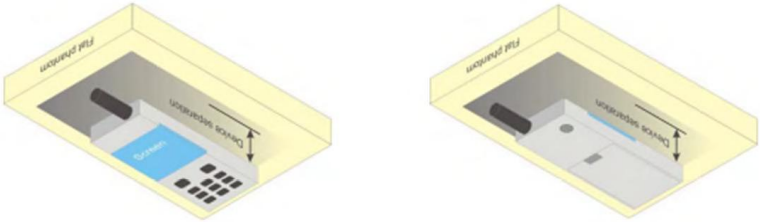

8. Uncertainty

8.1 Measurement Uncertainty

The following measurement uncertainty levels have been estimated for tests performed on the EUT as specified in IEEE 1528: 2013.This uncertainty represents an expanded uncertainty expressed at approximately the 95% confidence level using a coverage factor of k=2.

Uncertainty Component	Tol (+- %)	Prob. Dist.	Div.	Ci (1g)	Ci (10g)	1g Ui (+-%)	10g Ui (+-%)	vi
Measurement System								
Probe calibration	5.831	N	1	1	1	5.83	5.83	∞
Axial Isotropy	0.695	R	$\sqrt{3}$	√0.5	√0.5	0.28	0.28	∞
Hemispherical Isotropy	1.045	R	$\sqrt{3}$	√0.5	√0.5	0.43	0.43	∞
Boundary effect	1.0	R	$\sqrt{3}$	1	1	0.58	0.58	∞
Linearity	0.685	R	$\sqrt{3}$	1	1	0.40	0.40	∞
System detection limits	1.0	R	$\sqrt{3}$	1	1	0.58	0.58	∞
Modulation response	3.0	R	$\sqrt{3}$	1	1	1.73	1.73	∞
Readout Electronics	0.021	N	1	1	1	0.021	0.021	∞
Response Time	0	R	$\sqrt{3}$	1	1	0	0	∞
Integration Time	1.4	R	$\sqrt{3}$	1	1	0.81	0.81	∞
RF ambient conditions-Noise	3.0	R	$\sqrt{3}$	1	1	1.73	1.73	∞
RF ambient conditions-reflections	3.0	R	$\sqrt{3}$	1	1	1.73	1.73	∞
Probe positioner mechanical tolerance	1.4	R	$\sqrt{3}$	1	1	0.81	0.81	∞
Probe positioning with respect to phantom shell	1.4	R	$\sqrt{3}$	1	1	0.81	0.81	∞
Post-processing	2.3	R	$\sqrt{3}$	1	1	1.33	1.33	∞
Test sample Related								
Test sample positioning	2.6	N	1	1	1	2.6	2.6	∞
Device holder uncertainty	3	N	1	1	1	3	3	∞
SAR drift measurement	5	R	$\sqrt{3}$	1	1	2.89	2.89	∞
SAR scaling	5	R	$\sqrt{3}$	1	1	2.89	2.89	∞
Phantom and tissue parameters								
Phantom uncertainty（shape and thickness uncertainty）	4	R	$\sqrt{3}$	1	1	2.31	2.31	∞
Uncertainty in SAR correction for deviations in permittivity and conductivity	1.9	N	1	1	0.84	1.90	1.60	∞
Liquid conductivity （temperature uncertainty）	2.5	R	$\sqrt{3}$	0.78	0.71	1.13	1.02	∞
Liquid conductivity （measured）	4	N	1	0.78	0.71	3.12	2.84	M
Liquid permittivity （temperature uncertainty）	2.5	R	$\sqrt{3}$	0.23	0.26	0.33	0.38	∞
Liquid permittivity （measured）	5	N	1	0.23	0.26	1.15	1.30	M
Combined Standard Uncertainty		RSS				9.79	9.59	
Expanded Uncertainty (95% Confidence interval)		K=2				19.58	19.18	

8.2 System validation Uncertainty

Uncertainty Component	Tol (+- %)	Prob. Dist.	Div.	Ci (1g)	Ci (10g)	1g Ui (+-%)	10g Ui (+-%)	vi
Measurement System								
Probe calibration	5.831	N	1	1	1	5.83	5.83	∞
Axial Isotropy	0.695	R	$\sqrt{3}$	1	1	0.40	0.40	∞
Hemispherical Isotropy	1.045	R	$\sqrt{3}$	0	0	0.00	0.00	∞
Boundary effect	1.0	R	$\sqrt{3}$	1	1	0.58	0.58	∞
Linearity	0.685	R	$\sqrt{3}$	1	1	0.40	0.40	∞
System detection limits	1.0	R	$\sqrt{3}$	1	1	0.58	0.58	∞
Modulation response	3.0	R	$\sqrt{3}$	0	0	0.00	0.00	∞
Readout Electronics	0.021	N	1	1	1	0.021	0.021	∞
Response Time	0.0	R	$\sqrt{3}$	0	0	0.00	0.00	∞
Integration Time	1.4	R	$\sqrt{3}$	0	0	0.00	0.00	∞
RF ambient conditions-Noise	3.0	R	$\sqrt{3}$	1	1	1.73	1.73	∞
RF ambient conditions-reflections	3.0	R	$\sqrt{3}$	1	1	1.73	1.73	∞
Probe positioner mechanical tolerance	1.4	R	$\sqrt{3}$	1	1	0.81	0.81	∞
Probe positioning with respect to phantom shell	1.4	R	$\sqrt{3}$	1	1	0.81	0.81	∞
Post-Processing	2.3	R	$\sqrt{3}$	1	1	1.33	1.33	∞
System validation source								
Deviation of experimental dipole from numerical dipole	5.0	N	1	1	1	5.00	5.00	∞
Input power and SAR drift measurement	5.0	R	$\sqrt{3}$	1	1	2.89	2.89	∞
Other source contribution Uncertainty	2.0	R	$\sqrt{3}$	1	1	1.15	1.15	∞
Phantom and set-up								
Phantom uncertainty（shape and thickness uncertainty）	4.0	R	$\sqrt{3}$	1	1	2.31	2.31	∞
Uncertainty in SAR correction for deviations in permittivity and conductivity	1.9	N	1	1	0.84	1.90	1.60	∞
Liquid conductivity（temperature uncertainty）	2.5	R	$\sqrt{3}$	0.78	0.71	1.13	1.02	∞
Liquid conductivity（measured）	4	N	1	0.78	0.71	3.12	2.84	M
Liquid permittivity（temperature uncertainty）	2.5	R	$\sqrt{3}$	0.23	0.26	0.33	0.38	∞
Liquid permittivity（measured）	5	N	1	0.23	0.26	1.15	1.30	M
Combined Standard Uncertainty		RSS				9.718	9.517	
Expanded Uncertainty (95% Confidence interval)		K=2				19.44	19.04	

9. Conducted Power Measurement

Test Result

Frequency (MHz)	Channel	ERP (dBm)	Tune up power
462.5625-462.7125MHz (1~7 channel)			
462.5625	1	29.35	30±1dBm
462.5875	2	**29.60**	
462.6125	3	29.45	
462.6375	4	29.30	
462.6625	5	29.35	
462.6875	6	29.39	
462.7125	7	29.34	
467.5625-467.7125MHz (8~14 channel)			
467.5625	8	**28.95**	29±1dBm
467.5875	9	28.90	
467.6125	10	28.87	
467.6375	11	28.85	
467.6625	12	28.83	
467.6875	13	28.83	
467.7125	14	28.82	
462.5500-462.7250MHz (15~22 channel)			
462.5500	15	**29.18**	30±1dBm
462.5750	16	29.16	
462.6000	17	29.17	
462.6250	18	29.17	
462.6500	19	29.17	
462.6750	20	29.17	
462.7000	21	29.16	
462.7250	22	29.14	

10. EUT And Test Setup Photo

10.1 EUT Photo

Front side

Back side

Top Edge

Bottom Edge

Left Edge

Right Edge

10.2 Setup Photo

Face up (separation distance is 25mm)

Back Touch (separation distance is 0mm)

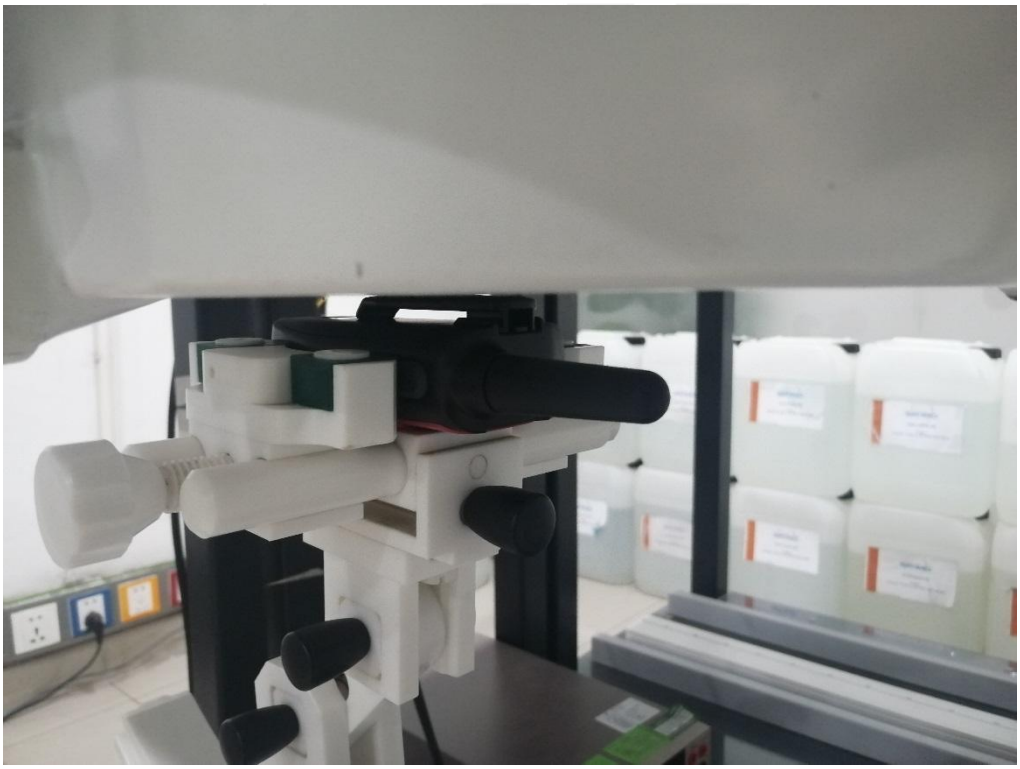

Liquid depth (15 cm)

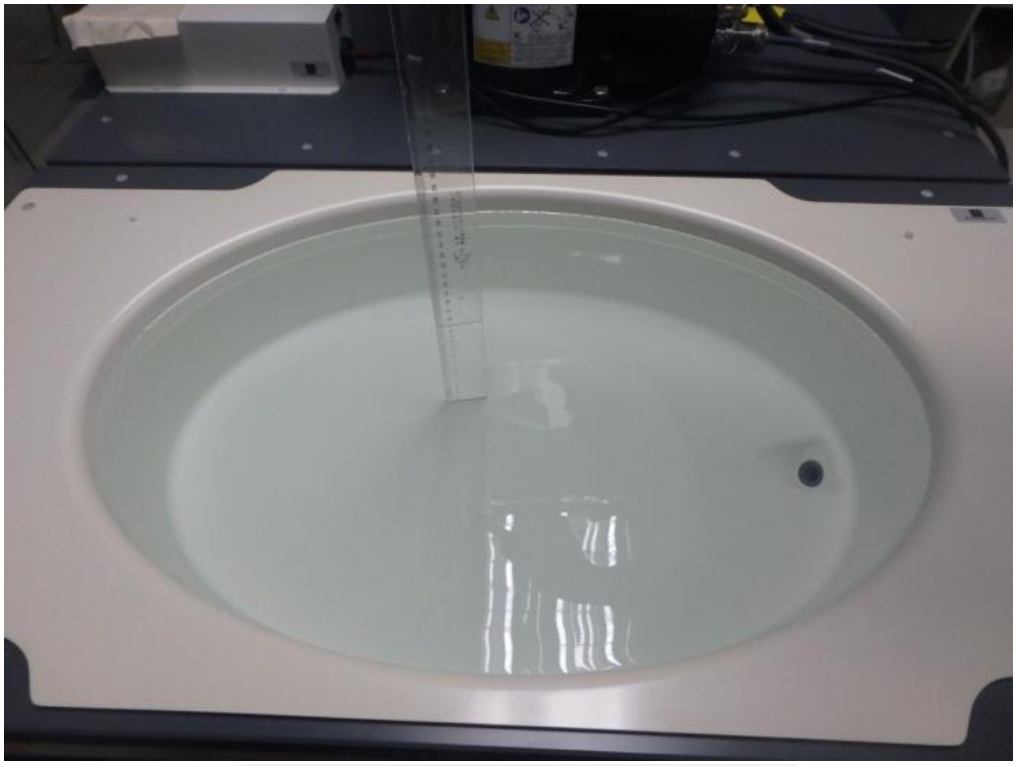

11. SAR Result Summary

11.1 Summary of Measurement Result

Phantom Configurations	Frequency (MHz)	Power Drift(%)	SAR 1g with 100% duty cycle (W/Kg)	SAR 1g with 50% duty cycle (W/Kg)	Max. Tune-up Power (dBm)	Meas. output Power (dBm)	Scaling SAR (W/Kg)	Limit (W/Kg)	Meas. No.
Face up	462.5875	-1.16	0.772	0.386	31	29.60	**0.533**	1.6	1
Face up	467.5625	-3.40	0.713	0.3565	30	28.95	**0.454**	1.6	3
Face up	462.5500	-2.08	1.239	0.6195	31	29.18	**0.942**	1.6	5
Back Touch	462.5875	-1.37	1.253	0.6265	31	29.60	**0.865**	1.6	2
Back Touch	467.5625	0.21	1.325	0.6625	30	28.95	**0.844**	1.6	4
Back Touch	462.5500	0.11	1.470	0.735	31	29.18	**1.118**	1.6	6

Note:

1. When devices that are designed to operate on the body of users using lanyards and straps, or without requiring additional body-worn accessories, must be tested for SAR compliance using a conservative minimum test separation distance ≤ 5 mm to support compliance refer to KDB447498.
2. Except when area scan based 1-g SAR estimation applies, a zoom scan measurement is required at the highest peak SAR location determined in the area scan to determine the 1-g SAR. When the 1-g SAR of the highest peak is within 2 dB of the SAR limit, additional zoom scans are required for other peaks within 2 dB of the highest peak that have not been included in any zoom scan to ensure there is no increase in SAR refer to KDB865664D01v01r04.
3. When the highest reported SAR is <6.0 W/Kg (based on 50% Duty Cycle), PBA is not required according to KDB643646 and KDB388624 D02;
4. Testing antennas with the default battery: Starting by testing a PTT radio with a standard battery (default battery) that is supplied with the radio to measure the head SAR of each antenna on the highest output power channel, according to test channels required by KDB447498 and in the frequency range covered by each antenna within the operating frequency bands of the radio. When multiple standard batteries are supplied with a radio, the battery with the highest capacity is considered the default battery for making head SAR measurements:
   When the head SAR of antenna tested in above description is:
   a. ≤3.5 W/Kg. testing of all other required channels is not necessary for that antenna;
   b. >3.5 W/Kg and ≤4.0 W/Kg, testing of the required immediately adjacent channel(s) is not necessary, testing of the other required channels maybe still be required.
   c. >4.0 W/Kg and ≤6.0 W/Kg, Head SAR should be measured for that antenna on the required immediately adjacent channel(s) is not necessary, testing of the other required channels still needs consideration.
   d. >6.0 W/Kg, test all required channels for that antenna.

e. For the remaining channels that cannot be excluded in b) and c), which still require consideration, the 3.5 W/Kg exclusion in a) and 4.0 W/Kg exclusion in b) may be applied recursively with respect to the highest output power channel among the remaining channels; measure the SAR for the remaining channels that cannot be excluded.

i) If an immediately adjacent channel measured in c) or a remaining channel measured in e)is >6.0 W/Kg, test all required channels for that antenna.

5. Testing antennas with the default battery: Starting by testing a PTT radio with the thinnest battery and standard (default) body-worn accessory that are both supplied with the radio and if applicable, a default audio accessory, to measure the body SAR of each antenna on the highest output power channel, according to test channels required by KDB447498 and in the frequency range covered by each antenna within the operating frequency bands of the radio. When multiple standard body-worn accessories are supplied with a radio, the standard body-worn accessory expected to result in the highest SAR based on its exposure conditions is considered the default body-worn accessory for making body-worn SAR measurements:

When the head SAR of antenna tested in above description is:

a. ≤3.5 W/Kg. testing of all other required channels is not necessary for that antenna;

b. >3.5 W/Kg and ≤4.0 W/Kg, testing of the required immediately adjacent channel(s) is not necessary, testing of the other required channels maybe still be required.

c. >4.0 W/Kg and ≤6.0 W/Kg, Head SAR should be measured for that antenna on the required immediately adjacent channel(s) is not necessary, testing of the other required channels still needs consideration.

d. >6.0 W/Kg, test all required channels for that antenna.

e. For the remaining channels that cannot be excluded in b) and c), which still require consideration, the 3.5 W/Kg exclusion in a) and 4.0 W/Kg exclusion in b) may be applied recursively with respect to the highest output power channel among the remaining channels; measure the SAR for the remaining channels that cannot be excluded.

ii) If an immediately adjacent channel measured in c) or a remaining channel measured in e) is >6.0 W/Kg, test all required channels for that antenna.

11.2 Repeated SAR

Phantom Configurations	Frequency (MHz)	Power Drift(%)	SAR 1g with 100% duty cycle (W/Kg)	SAR 1g with 50% duty cycle (W/Kg)	Max. Tune-up Power (dBm)	Meas. output Power (dBm)	Scaling SAR (W/Kg)	Limit (W/Kg)	Meas. No.
Face up	462.5500	3.16	1.220	0.6100	31	29.18	0.928	1.6	/
Back Touch	462.5875	3.39	1.235	0.6175	31	29.60	0.852	1.6	/
Back Touch	467.5625	-3.56	1.307	0.6535	30	28.95	0.832	1.6	/
Back Touch	462.5500	1.29	1.467	0.7335	31	29.18	1.115	1.6	/

11.3 repeated SAR measurement

Phantom Configurations	Frequency (MHz)	Original Measured SAR 1g with 50% duty cycle (W/Kg)	1st Repeated SAR 1g with 50% duty cycle	Ratio	Original Measured SAR 1g(mW/g)	2nd Repeated SAR 1g	Ratio
Face up	462.5500	0.6195	0.6100	1.02	-	-	-
Back Touch	462.5875	0.6265	0.6175	1.01	-	-	-
Back Touch	467.5625	0.6625	0.6535	1.01	-	-	-
Back Touch	462.5500	0.735	0.7335	1.00	-	-	-

Note:

1. Per KDB 865664 D01,for each frequency band ,repeated SAR measurement is required only when the measured SAR is⩾0.8W/Kg.
2. Per KDB 865664 D01,if the ratio of largest to smallest SAR for the original and first repeated measurement is⩽1.2 and the measured SAR＜1.45W/Kg, only one repeated measurement is required.
3. Perform a second repeated measurement only if the ratio of largest to smallest SAR for the original and first repeated measurements is＞1.20 or when the original or repeated measurement is ⩾ 1.45W/Kg
4. The ratio is the difference in percentage between original and repeated measured SAR.

12. Equipment List

Kind of Equipment	Manufacturer	Type No.	Serial No.	Last Calibration	Calibrated Until
450MHz Dipole	MVG	SID450	SN 30/14 DIP0G450-330	2020.07.14	2023.07.13
E-Field Probe	MVG	SSE2	SN 41/18 EPGO334	2020.06.03	2021.06.02
Dielectric Probe Kit	MVG	SCLMP	SN 32/14 OCPG67	2019.11.25	2020.11.24
Antenna	MVG	ANTA3	SN 07/13 ZNTA52	N/A	N/A
Phantom1	MVG	SAM	SN 32/14 SAM115	N/A	N/A
Phantom2	MVG	SAM	SN 32/14 SAM116	N/A	N/A
Phone holder	MVG	N/A	SN 32/14 MSH97	N/A	N/A
Laptop holder	MVG	N/A	SN 32/14 LSH29	N/A	N/A
Attenuator	Agilent	99899	DC-18GHz	N/A	N/A
Directional coupler	Narda	4226-20	3305	N/A	N/A
Network Analyzer	Agilent	8753ES	US38432810	2019.10.11	2020.10.10
Multi Meter	Keithley	Multi Meter 2000	4050073	2019.10.11	2020.10.10
Signal Generator	Agilent	N5182A	MY50140530	2019.10.09	2020.10.08
Wireless Communication Test Set	Agilent	8960-E5515C	MY48360751	2019.10.09	2020.10.08
Wireless Communication Test Set	R&S	CMW500	117239	2019.10.09	2020.10.08
Power Amplifier	DESAY	ZHL-42W	9638	2019.10.09	2020.10.08
Power Meter	R&S	NRP	100510	2019.10.16	2020.10.15
Power Meter	Agilent	E4418B	GB43312526	2019.10.16	2020.10.15
Power Sensor	R&S	NRP-Z11	101919	2019.10.09	2020.10.08
Power Sensor	Agilent	E9301A	MY41497725	2019.10.09	2020.10.08
Temperature hygrometer	SuWei	SW-108	N/A	2019.10.13	2020.10.12
Thermograph	Elitech	RC-4	S/N EF7176501537	2019.10.11	2020.10.10

Note:
Per KDB 865664 D01, Dipole SAR Validation Verification, STS LAB has adopted 3 years calibration intervals. On annual basis, every measurement dipole has been evaluated and is in compliance with the following criteria:
1. There is no physical damage on the dipole
2. System validation with specific dipole is within 10% of calibrated value
Return-loss in within 20% of calibrated measurement

Appendix A. System Validation Plots

System Performance Check Data (450MHz Head)

Type: Phone measurement (Complete)
Area scan resolution: dx=8mm,dy=8mm
Zoom scan resolution: dx=8mm, dy=8mm, dz=5mm
Date of measurement: 2020-08-19

Experimental conditions.

Probe	
Phantom	Validation plane
Device Position	-
Band	450MHz
Channels	-
Signal	CW
Frequency (MHz)	450MHz
Relative permittivity	42.87
Conductivity (S/m)	0.85
Power drift (%)	1.24
Probe	SN 41/18 EPGO334
ConvF:	1.42
Crest factor:	1:1

SURFACE SAR	VOLUME SAR
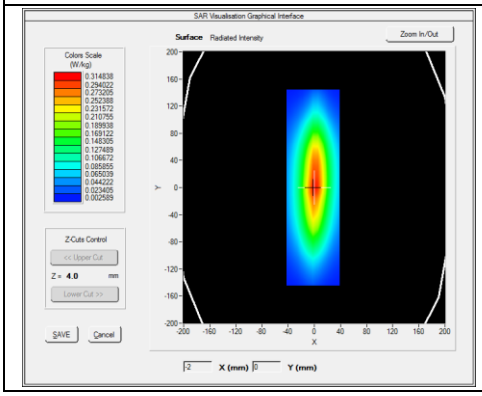	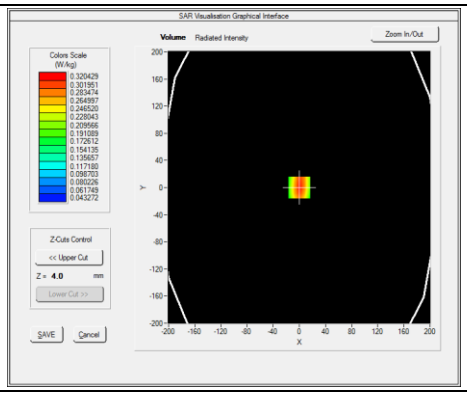

Maximum location: X=3.00, Y=0.00

SAR 10g (W/Kg)	0.235334
SAR 1g (W/Kg)	0.484338

Z Axis Scan

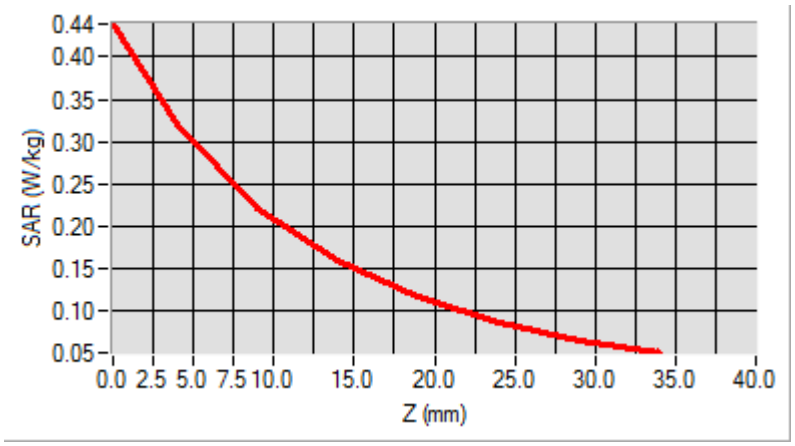
SAR (W/kg)
0.44
0.40
0.35
0.30
0.25
0.20
0.15
0.10
0.05
0.0 2.5 5.0 7.5 10.0 15.0 20.0 25.0 30.0 35.0 40.0
Z (mm)

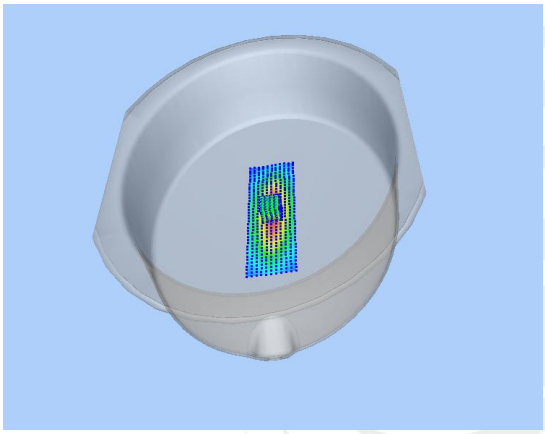

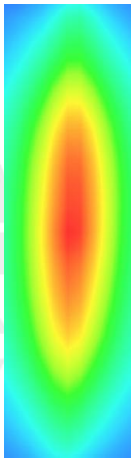

Appendix B. SAR Test Plots

Plot 1: DUT: Walkie Talkie; EUT Model: M-900

Test Date	2020-08-19
Probe	SN 41/18 EPGO334
ConvF	1.42
Area Scan	dx=8mm dy=8mm, h= 5.00 mm
Zoom Scan	5x5x7,dx=8mm dy=8mm dz=5mm, Complete/ndx=8mm dy=8mm, h= 5.00 mm
Phantom	Validation plane
Device Position	Face up
Signal	Crest factor: 1.0
Frequency (MHz)	462.5875
Relative permittivity (real part)	42.87
Conductivity (S/m)	0.85

Maximum location: X=-11.00, Y=30.00
SAR Peak: 1.02 W/kg

SAR 10g (W/Kg)	0.554163
SAR 1g (W/Kg)	0.771880

SURFACE SAR	VOLUME SAR
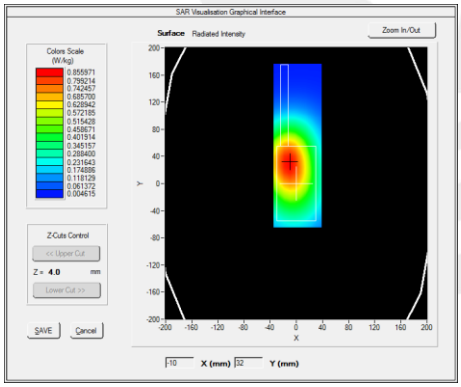	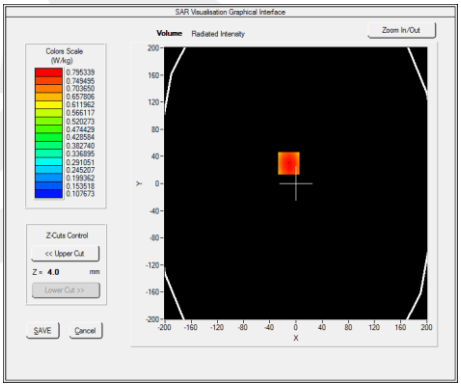
3D screen shot	**Z Axis Scan**
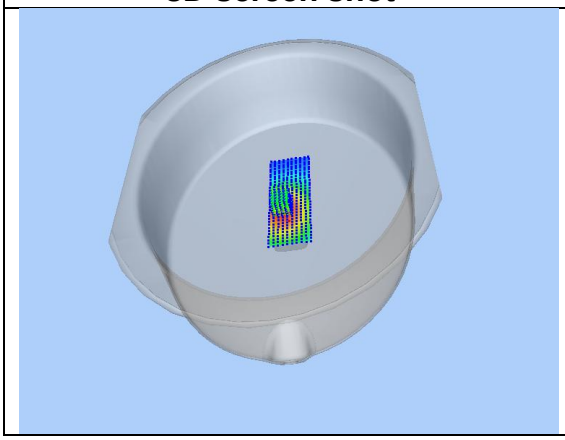	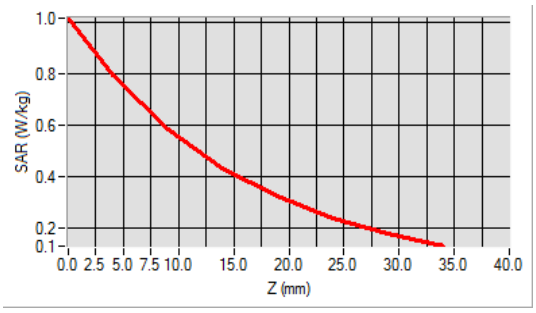

Plot 2: DUT: Walkie Talkie; EUT Model: M-900

Test Date	2020-08-19
Probe	SN 41/18 EPGO334
ConvF	1.45
Area Scan	dx=8mm dy=8mm, h= 5.00 mm
Zoom Scan	5x5x7,dx=8mm dy=8mm dz=5mm, Complete/ndx=8mm dy=8mm, h= 5.00 mm
Phantom	Validation plane
Device Position	Back touch
Signal	Crest factor: 1.0
Frequency (MHz)	462.5875
Relative permittivity (real part)	42.87
Conductivity (S/m)	0.85

Maximum location: X=0.00, Y=34.00
SAR Peak: 1.67 W/kg

SAR 10g (W/Kg)	0.890162
SAR 1g (W/Kg)	1.252809

SURFACE SAR	VOLUME SAR
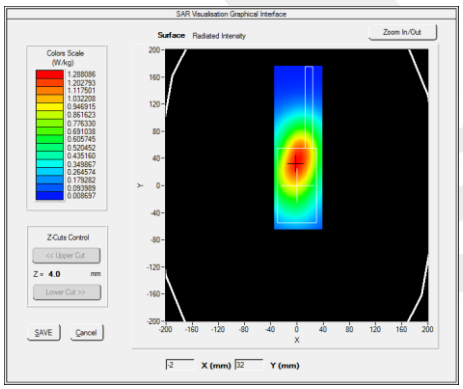	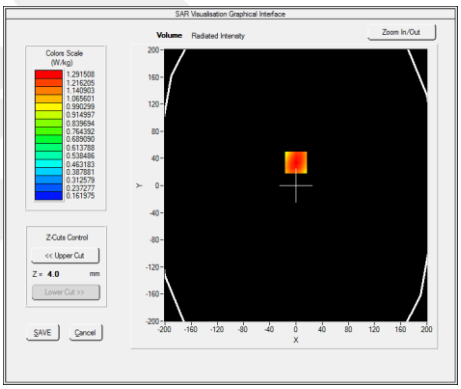
3D screen shot	**Z Axis Scan**
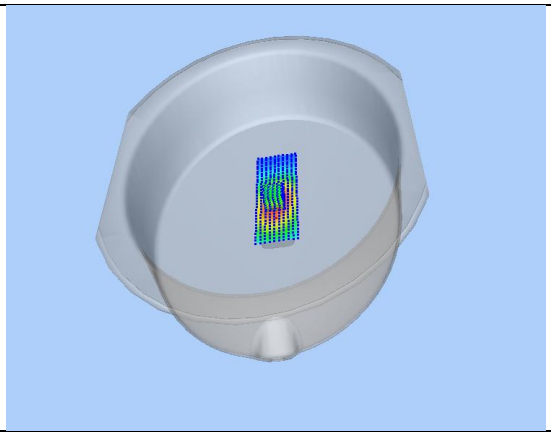	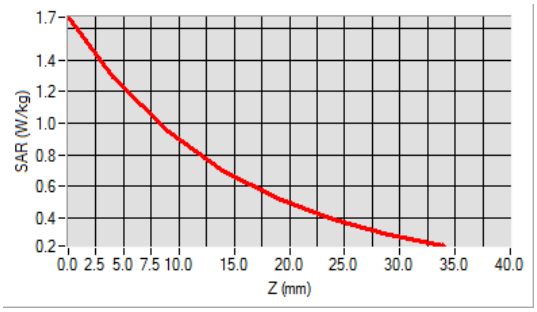

Plot 3: DUT: Walkie Talkie; EUT Model: M-900

Test Date	2020-08-19
Probe	SN 41/18 EPGO334
ConvF	1.42
Area Scan	dx=8mm dy=8mm, h= 5.00 mm
Zoom Scan	5x5x7,dx=8mm dy=8mm dz=5mm, Complete/ndx=8mm dy=8mm, h= 5.00 mm
Phantom	Validation plane
Device Position	Face up
Signal	Crest factor: 1.0
Frequency (MHz)	467.5625
Relative permittivity (real part)	42.87
Conductivity (S/m)	0.85

Maximum location: X=-10.00, Y=27.00
SAR Peak: 0.93 W/kg

SAR 10g (W/Kg)	0.522987
SAR 1g (W/Kg)	0.713135

SURFACE SAR	VOLUME SAR
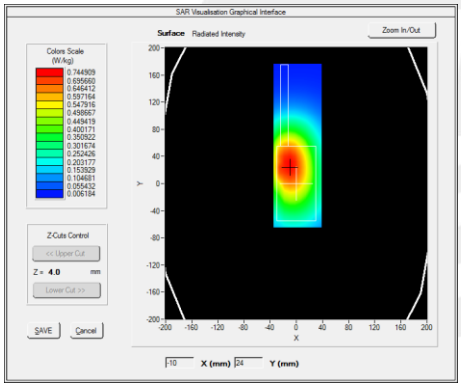	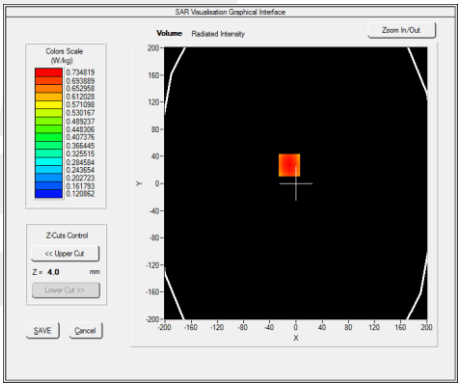
3D screen shot	**Z Axis Scan**
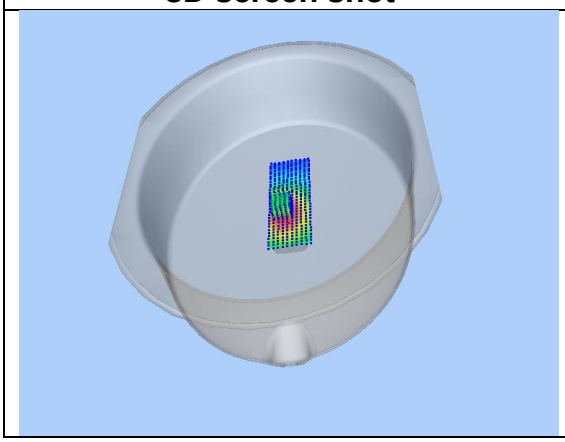	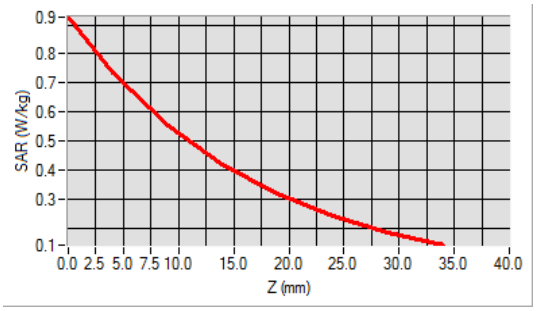

Plot 4: DUT: Walkie Talkie; EUT Model: M-900

Test Date	2020-08-19
Probe	SN 41/18 EPGO334
ConvF	1.45
Area Scan	dx=8mm dy=8mm, h= 5.00 mm
Zoom Scan	5x5x7,dx=8mm dy=8mm dz=5mm, Complete/ndx=8mm dy=8mm, h= 5.00 mm
Phantom	Validation plane
Device Position	Back touch
Signal	Crest factor: 1.0
Frequency (MHz)	467.5625
Relative permittivity (real part)	42.87
Conductivity (S/m)	0.85

Maximum location: X=1.00, Y=34.00
SAR Peak: 1.75 W/kg

SAR 10g (W/Kg)	0.950057
SAR 1g (W/Kg)	1.325388

SURFACE SAR	VOLUME SAR
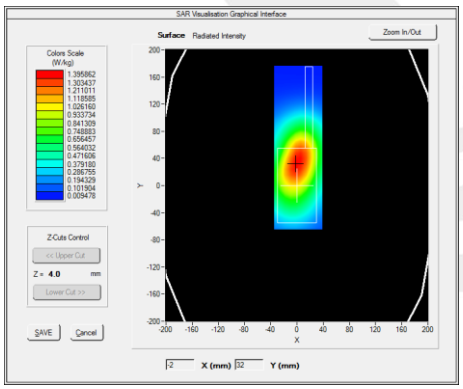	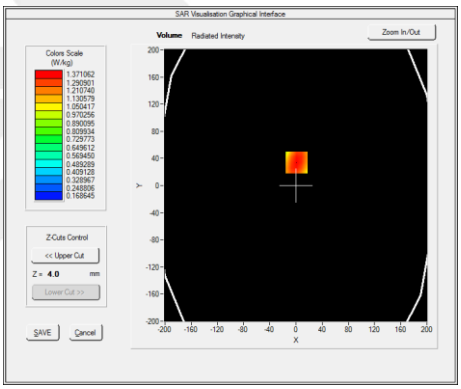
3D screen shot	**Z Axis Scan**
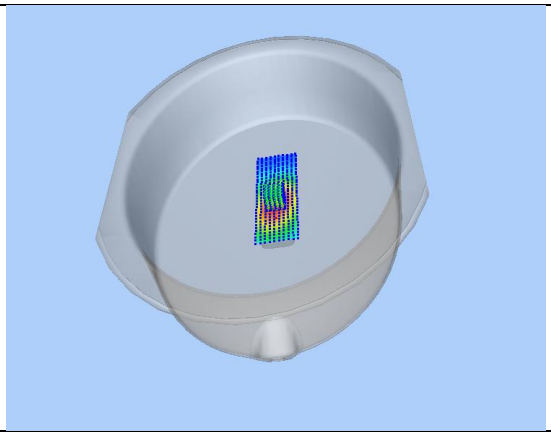	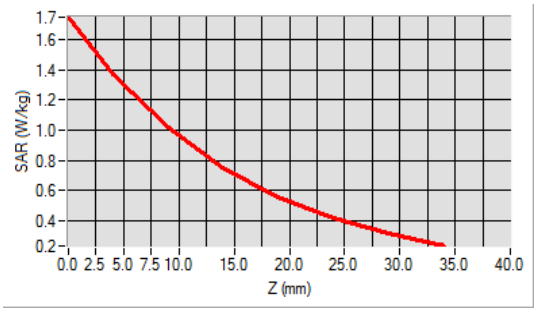

Plot 5: DUT: Walkie Talkie; EUT Model: M-900

Test Date	2020-08-19
Probe	SN 41/18 EPGO334
ConvF	1.42
Area Scan	dx=8mm dy=8mm, h= 5.00 mm
Zoom Scan	5x5x7,dx=8mm dy=8mm dz=5mm, Complete/ndx=8mm dy=8mm, h= 5.00 mm
Phantom	Validation plane
Device Position	Face up
Signal	Crest factor: 1.0
Frequency (MHz)	462.5500
Relative permittivity (real part)	42.87
Conductivity (S/m)	0.85

Maximum location: X=-8.00, Y=25.00
SAR Peak: 1.62 W/kg

SAR 10g (W/Kg)	0.899935
SAR 1g (W/Kg)	1.238680

SURFACE SAR	VOLUME SAR
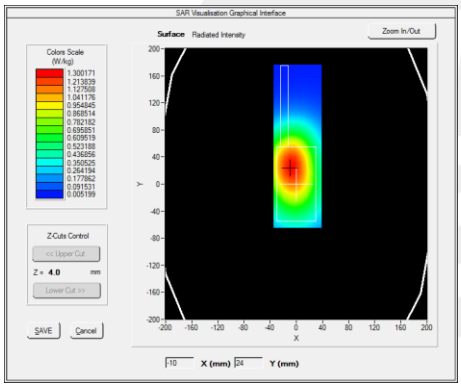	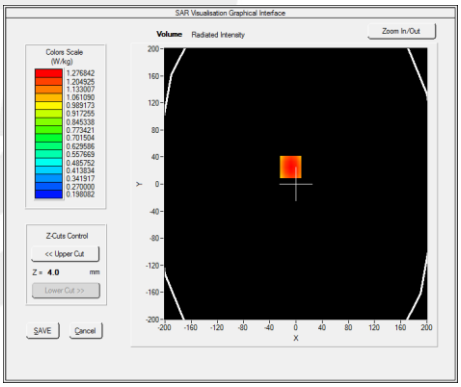
3D screen shot	**Z Axis Scan**
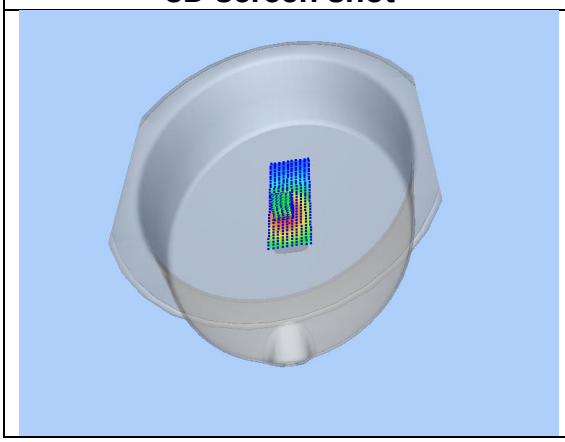	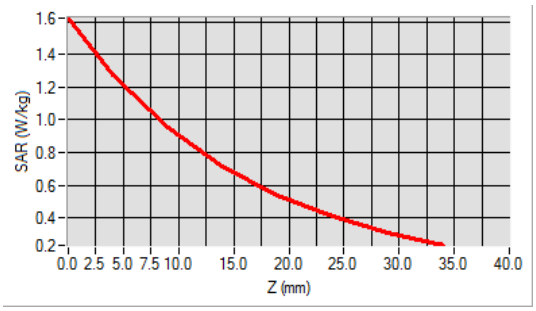

Plot 6: DUT: Walkie Talkie; EUT Model: M-900

Test Date	2020-08-19
Probe	SN 41/18 EPGO334
ConvF	1.45
Area Scan	dx=8mm dy=8mm, h= 5.00 mm
Zoom Scan	5x5x7,dx=8mm dy=8mm dz=5mm, Complete/ndx=8mm dy=8mm, h= 5.00 mm
Phantom	Validation plane
Device Position	Back touch
Signal	Crest factor: 1.0
Frequency (MHz)	462.5500
Relative permittivity (real part)	42.87
Conductivity (S/m)	0.85

Maximum location: X=-2.00, Y=32.00
SAR Peak: 1.94 W/kg

SAR 10g (W/Kg)	1.055581
SAR 1g (W/Kg)	1.469861

SURFACE SAR	VOLUME SAR
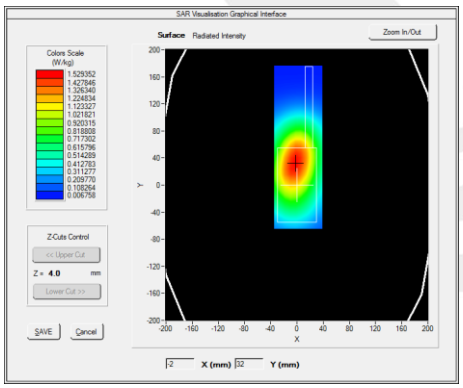	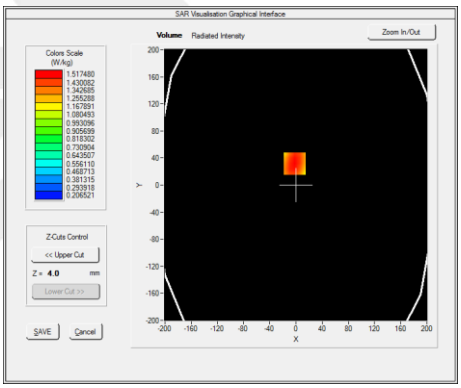
3D screen shot	**Z Axis Scan**
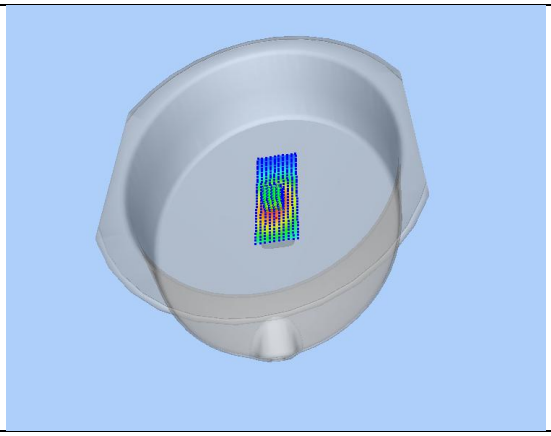	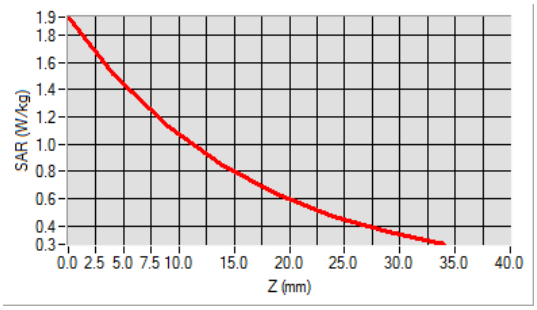

Appendix C. Probe Calibration and Dipole Calibration Report

Refer the appendix Calibration Report.

※※※※※END OF THE REPORT※※※※※