70. Apple MagSafe Charger Module

The MagSafe Charger Module enables accessories to wirelessly charge MagSafe-capable devices.

Examples of accessories benefiting from including the MagSafe Charger Module include charging cables, docks, and Battery Packs (page 150).

70.1 Accessory Integration

All MagSafe Charger Module accessories shall:

- Provide power to the device. See Electrical (page 628).
- Permit the device to move relative to the MagSafe Charger Module.

The MagSafe Charger Module is available in the following variants:

- MagSafe Charger Module (C222).
- MagSafe Charger Module (C222x) for increased design flexibility.
- MagSafe Charger Module (C223) with increased attach force.

Examples of accessories benefiting from the increased attach force of the MagSafe Charger Module (C223) include vent mounted chargers, battery packs, and tripod mounts.

Figure 70-1 MagSafe Charger Module (C222)

Copyright © 2022 Apple Inc. All Rights Reserved.

Figure 70-2 MagSafe Charger Module (C222x)

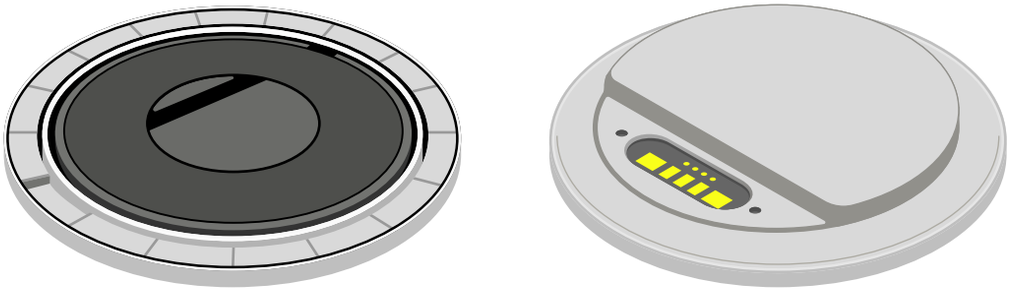

Figure 70-3 MagSafe Charger Module (C223)

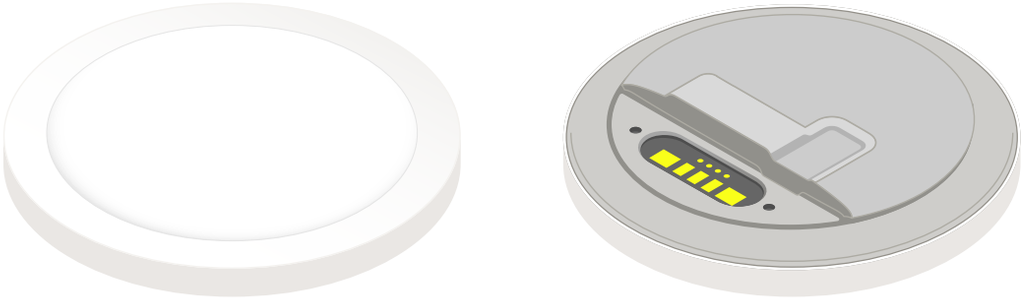

70.2 Mechanical

See the following for dimensional drawings:

- MagSafe Charger Module (C222) Dimensions 1 of 2 (page 638)
- MagSafe Charger Module (C222) Dimensions 2 of 2 (page 639)
- MagSafe Charger Module (C222x) Dimensions (page 640)
- MagSafe Charger Module (C223) Dimensions 1 of 2 (page 641)
- MagSafe Charger Module (C223) Dimensions 2 of 2 (page 642)

The accessory shall not interfere with or cause Scratches and Damage (page 53) to the device.

To avoid interference with devices, accessories shall:

- Mount the MagSafe Charger Module (C222) or MagSafe Charger Module (C223) so its surface is proud of the accessory surface.

Copyright © 2022 Apple Inc. All Rights Reserved.

70.8 MagSafe Charger Module (C222) Dimensions 1 of 2

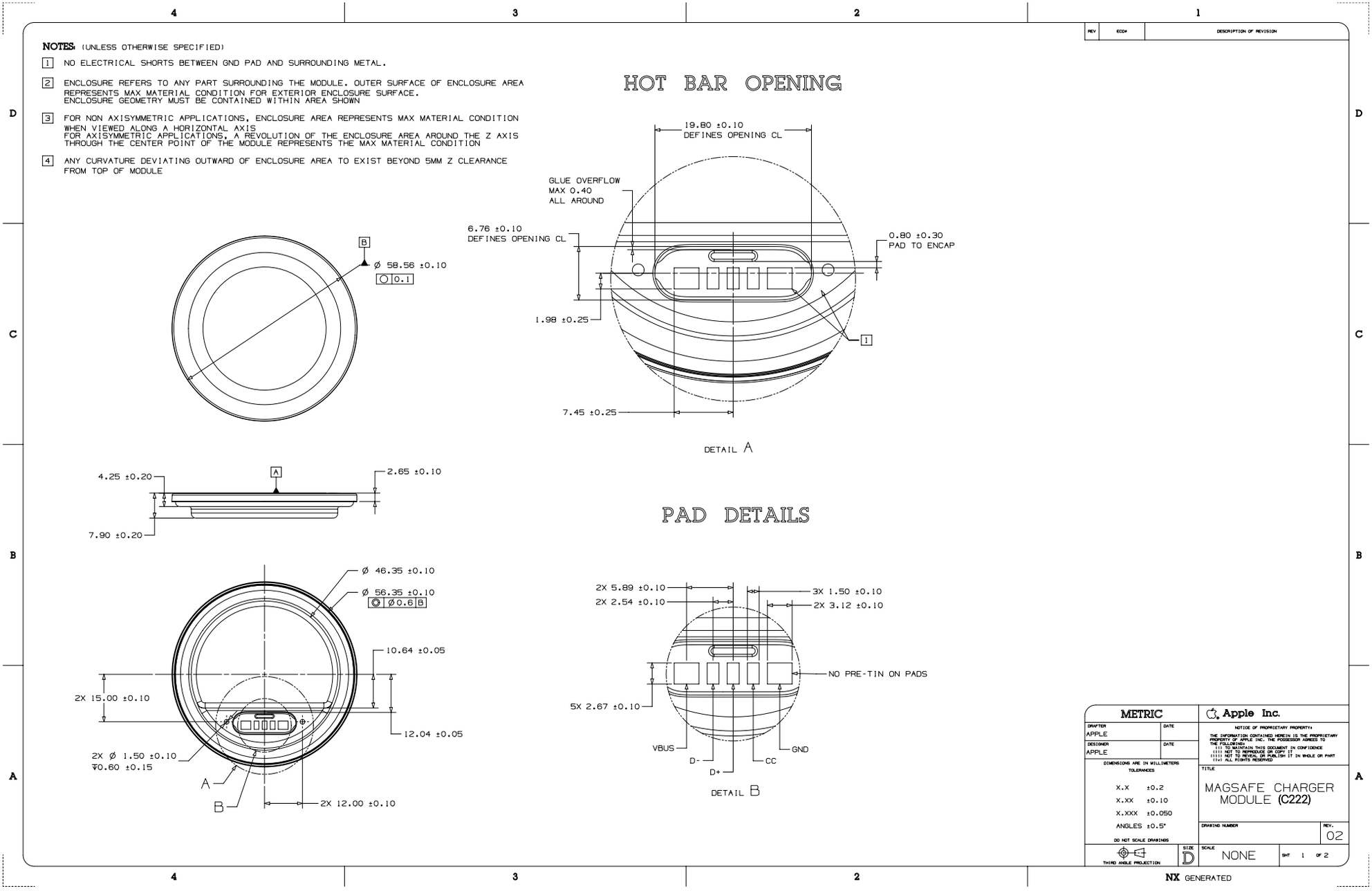

70.9 MagSafe Charger Module (C222) Dimensions 2 of 2

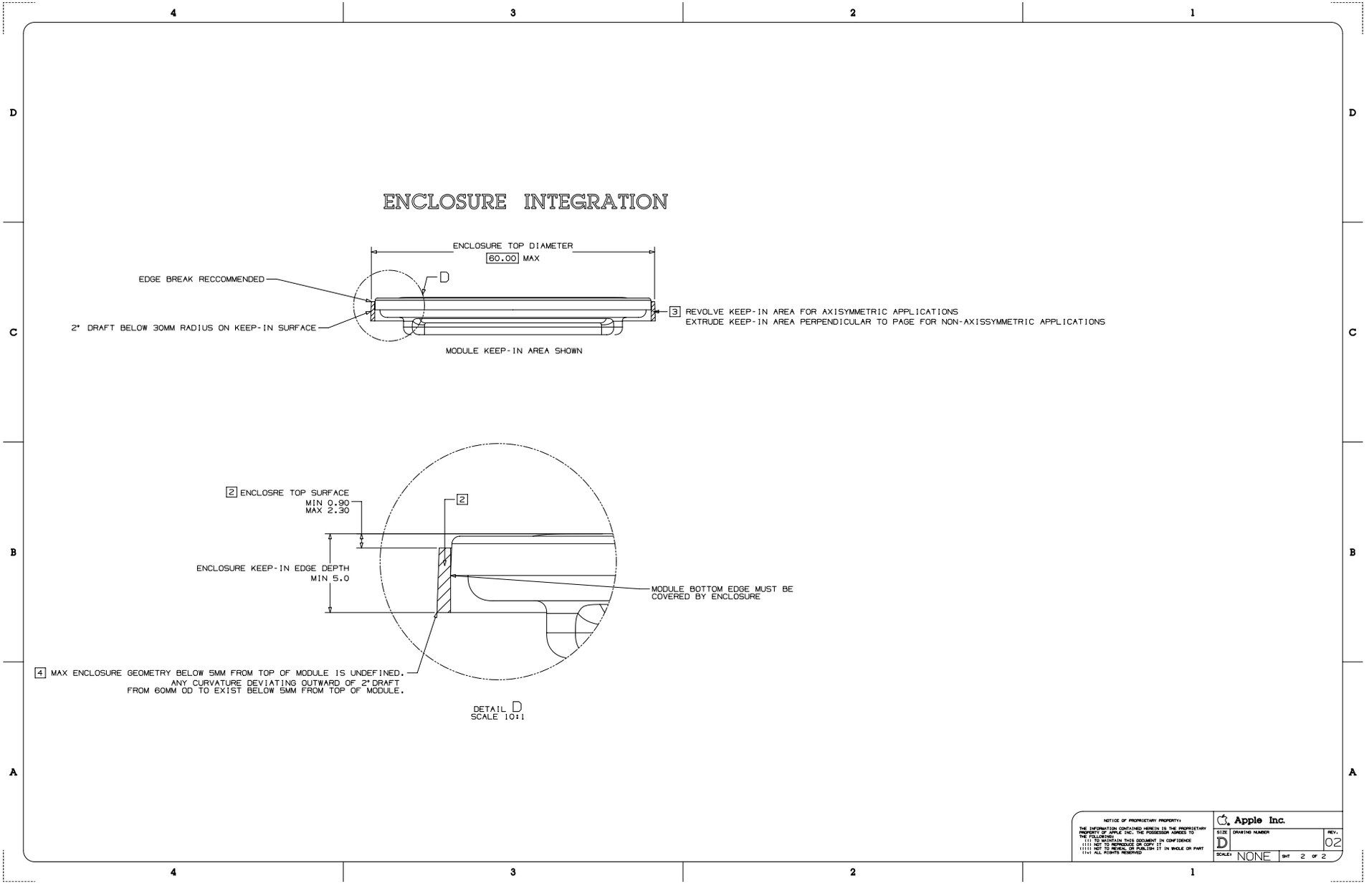

70.10 MagSafe Charger Module (C222x) Dimensions

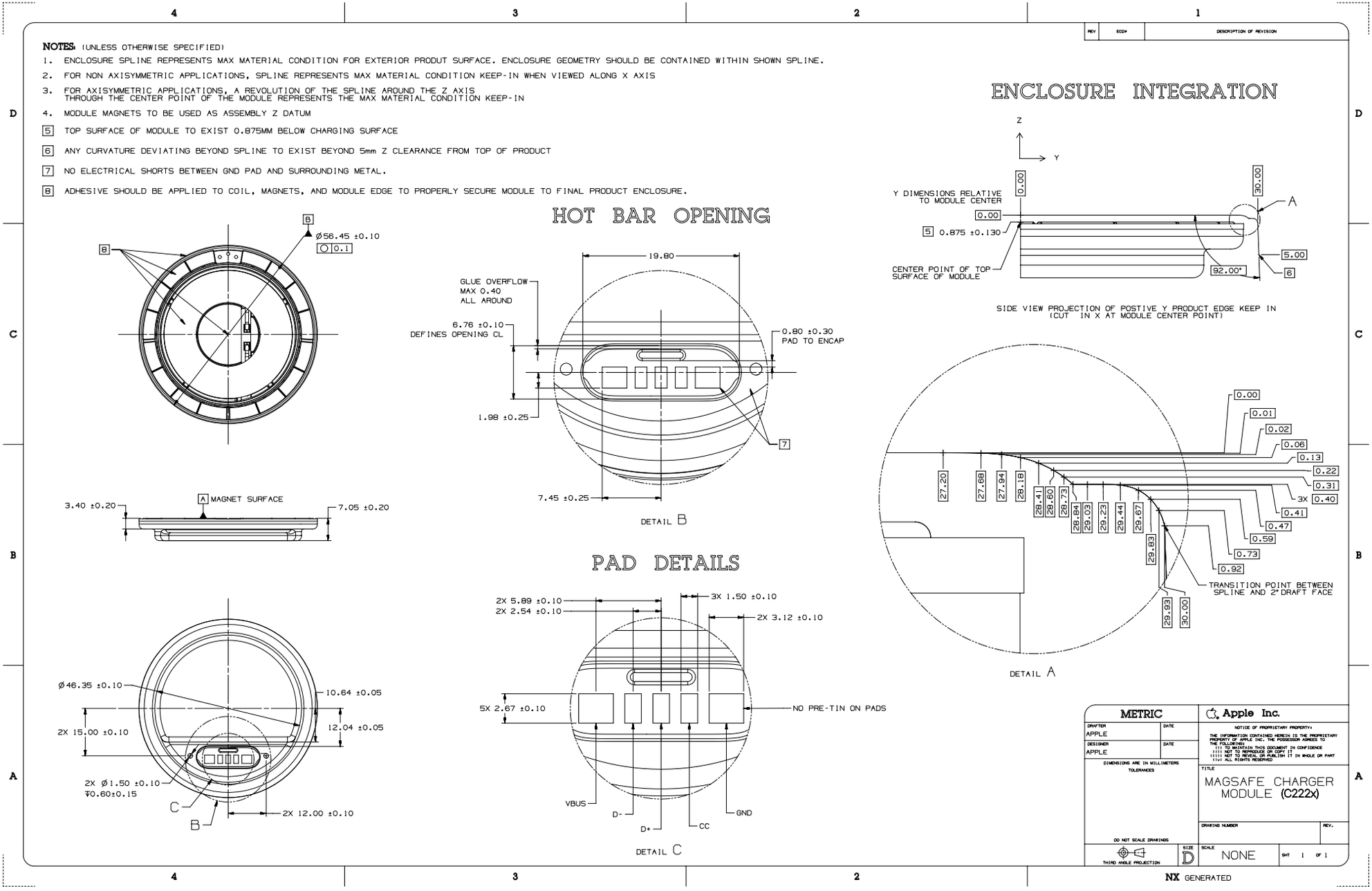

70.11 MagSafe Charger Module (C223) Dimensions 1 of 2

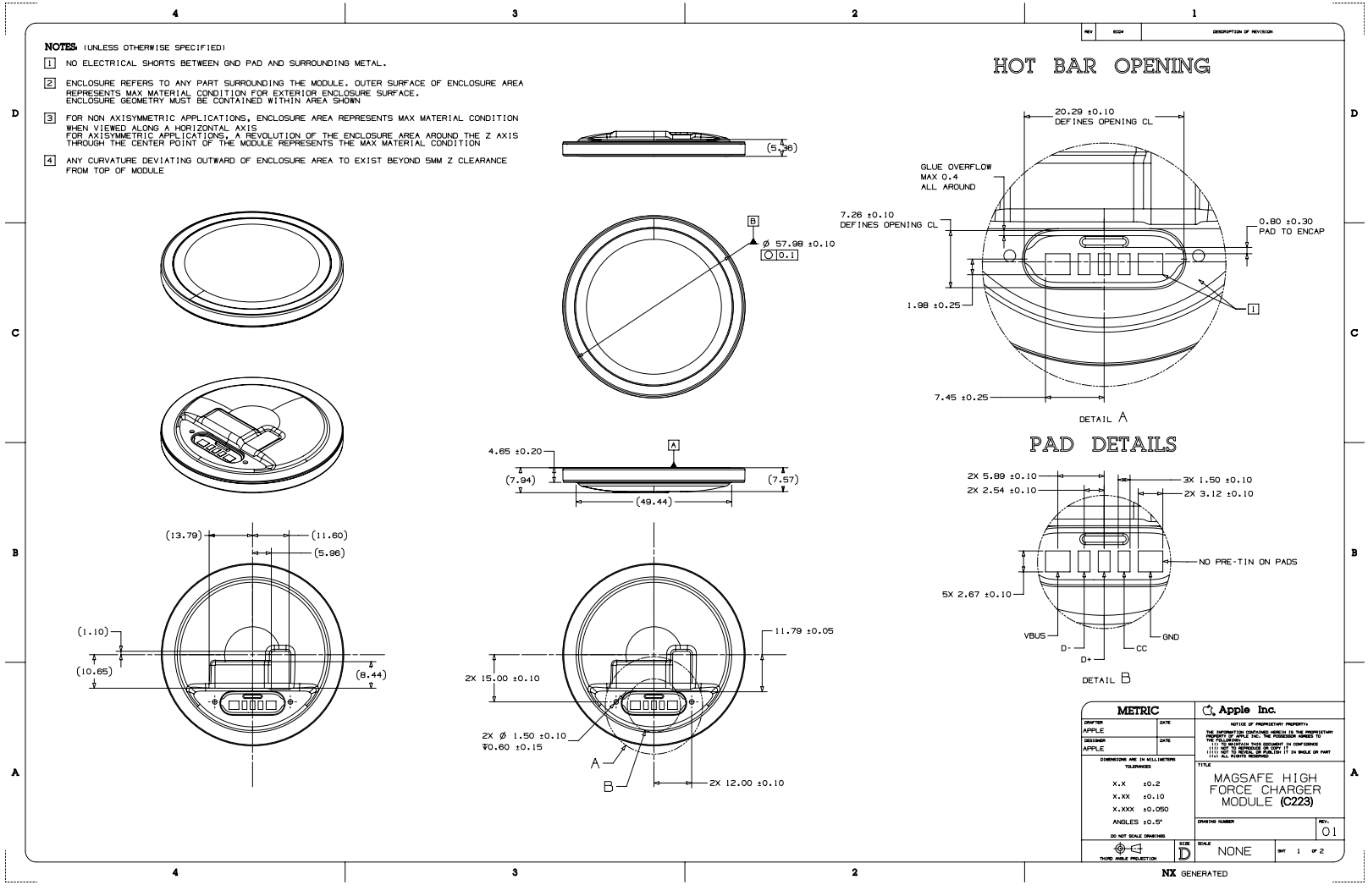

70.12 MagSafe Charger Module (C223) Dimensions 2 of 2

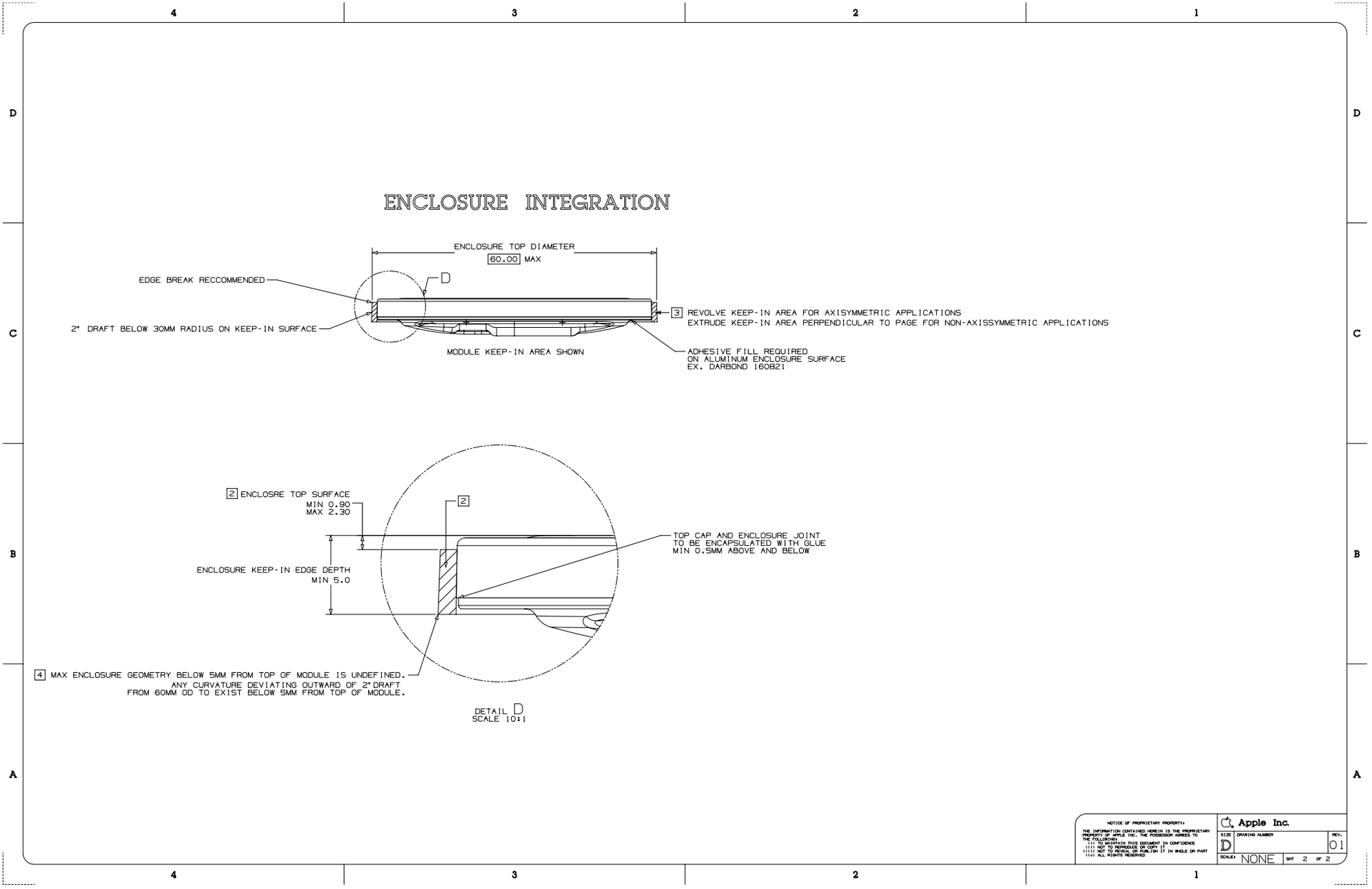

72. Apple Watch Fast Charger Module

The Watch Fast Charger Module (C962) enables accessories to charge the Apple Watch.

Figure 72-1 Watch Fast Charger Module

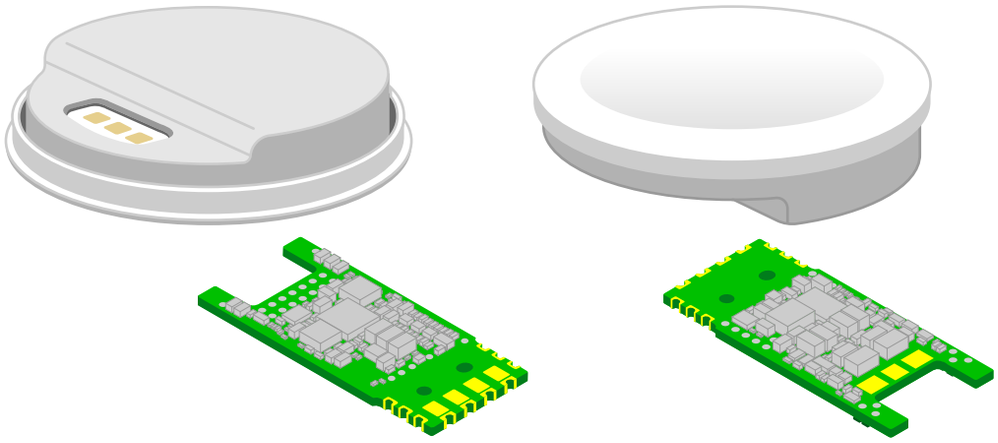

72.1 Accessory Integration

Note:
Charging accessories claiming compatibility with Apple Watch Ultra shall integrate the C962.

All C962 accessories shall:

- Provide power to Apple Watch. See Electrical (page 656).
- Hold the Apple Watch when it is magnetically connected to the C962.
- Permit the Apple Watch to move relative to the C962.
- Be intended for stationary use.

Accessories shall not integrate the C962 into wearable accessories such as wrist straps or watch bands.

Copyright © 2022 Apple Inc. All Rights Reserved.

72.2 Mechanical

The C962 consists of two parts:

- An inductive coil module, see Watch Fast Charger Inductive Coil Module Dimensions (page 668).
- A control module, see Watch Fast Charger Control Module Dimensions (page 669).

The control module should be mounted away from the inductive coil module to achieve the best charging performance.

The accessory shall not interfere with or cause Scratches and Damage (page 53) to the body of an Apple Watch or its attached band.

The accessory shall not require the watch band to be removed or detached.

The accessory should be compatible with all Apple bands including the Milanese Loop and the Link Bracelet.

To avoid interference with Apple Watch bands, accessories should:

- Not exceed 20 mm in radius around the center of the C962 inductive coil module surface if the Apple Watch can be attached in any orientation.
- Not exceed a length of 40 mm across the surface of the C962 inductive coil module (for a width of 40 mm) along the intended orientation of the Apple Watch if Apple Watch is intended to be attached in a specific orientation. See Figure 72-2 (page 654).

2022-10-26 | Copyright © 2022 Apple Inc. All Rights Reserved.

Figure 72-2 C962 Charging Arm Clearance

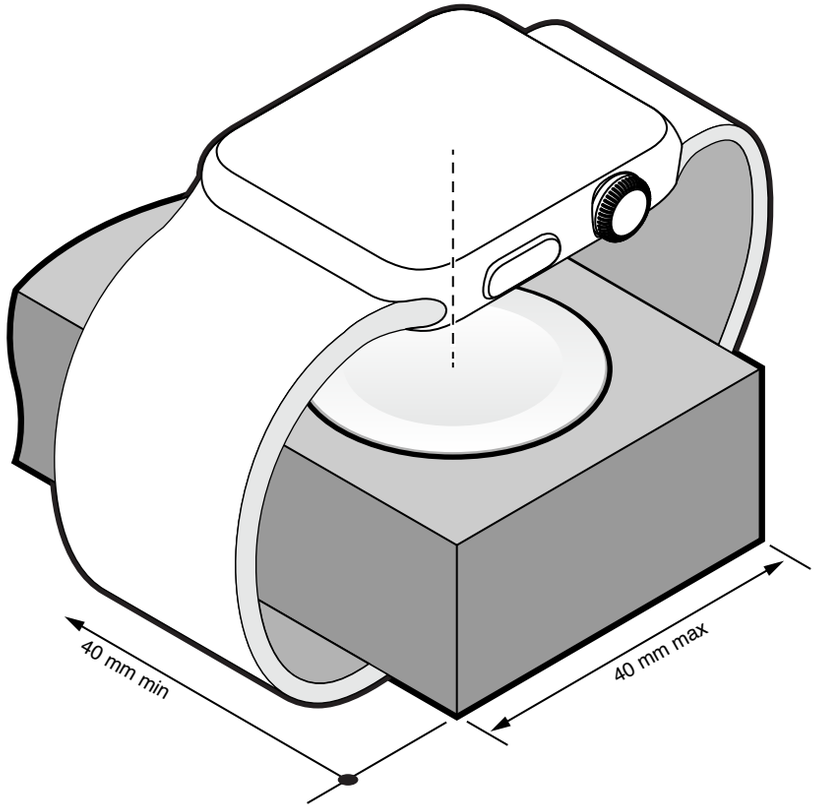

The exposed surface of the C962 inductive coil module shall be 0.40 mm ±0.25 mm proud of the surface of the accessory.

The C962 inductive coil module shall be mounted so any combination of Apple Watch and band shall not disengage and fall off due to gravity.

The C962 inductive coil module surface may be mounted either horizontally (recommended) or vertically:

- If mounted horizontally, the surface shall be mounted so it cannot be positioned or oriented greater than 45° from horizontal.
- If mounted vertically, the surface shall have a non-adjustable mounting angle. Additionally, the accessory shall support any model of Apple Watch as well as band on its side (crown up) with a pocket or alignment feature ensuring the center of the Apple Watch aligns with the center of the C962 inductive coil module surface within ±1.0 mm. See Table 72-1 (page 655) for Apple Watch vertical alignment heights.

Copyright © 2022 Apple Inc. All Rights Reserved.

Table 72-1 Apple Watch edge to center

Apple Watch Size	Apple Watch Edge to Center
38 mm (non-ceramic)	16.64 mm
38 mm (ceramic)	16.98 mm
40 mm (non-ceramic)	17.21 mm
40 mm (ceramic)	17.55 mm
41 mm (all)	17.39 mm
42 mm (non-ceramic)	18.22 mm
42 mm (ceramic)	18.27 mm
44 mm (non-ceramic)	18.92 mm
44 mm (ceramic)	19.26 mm
45 mm (all)	19.11 mm
49 mm (Apple Watch Ultra)	21.11 mm

Note:
Apple Watch placement tolerance is typically 820 µm. This should be taken into account when designing the vertical mount alignment feature.

The C962 inductive coil module shall not be mounted near ferromagnetic metals or alloys.

All RF/metal keep-out zones for the Apple Watch shall be respected, see Device Dimensional Drawings (page 912).

The C962 control module has the following mechanical characteristics:

- Not encapsulated in order to maximize compatibility with pick and place operations.
- FR4 PCB material.
- S70G-HF (CM) Type 4 solder is used. Solder reflow operations shall take this into consideration.
- 0-70 °C working temperature range.
- Packaged in a tray.

Note:
The C962 control module should be encapsulated to pass salt spray environmental testing.

The C962's maximum storage temperature is 60 °C.

72.2.1 Handling

Apple recommends the following handling guidelines:

- Use Pb-free solder.

Copyright © 2022 Apple Inc. All Rights Reserved.

- Use no-clean flux.
- Mitigate handling issues by assembling onto boards directly from tray.
- Use pick and place vision systems to automate assembly.

72.3 Electrical

Accessories integrating a C962 shall comply with the electrical requirements in this section.

72.3.1 Power

Accessories integrating a C962 shall provide power from either:
- An internal power supply.
- An external USB power source.

Components and terminations on the Watch Fast Charger Module control module shall be fully encapsulated with a rigid glue to protect C962 control module components. Apple recommends Loctite UV 9061F or equivalent.

The C962 control module should be contained within a sheet metal enclosure. Thermal paste with a thermal conductivity of at least 1.5 W/mK should be used to thermally bridge the C962 control module to the sheet metal enclosure. Apple recommends Colltech N-Sil 8615 thermal paste or equivalent.

If the accessory integrates an Internal Power Supply (page 657), it:
- May accept external power using any of the following integrated connectors so long as the accessory actively conditions and regulates the power:
  - USB-B receptacle (Standard, Mini, Micro).
  - USB-C Receptacle (page 831).
  - USB-C Plug (page 829).
  - Non-USB connector.
- May consume some of the external power for its own purposes so long as all C962 power requirements are met.

If the accessory relies on an External USB Power Source (page 657) to provide power to the C962 and does not contain its own internal power supply, it:
- Shall connect to the external USB power source using a USB-A plug or USB-C Plug (page 829).
- Shall not consume any power from the external USB power source.
- Shall not monitor or modify the USB D+/D- or USB CC signals from the external USB power source.

The accessory shall integrate reverse voltage protection (RVP) between the C962 power and ground.

Copyright © 2022 Apple Inc. All Rights Reserved.

The C962 nominal current limit is 1.0 A at 5 V with transients up to 1.5 A. The current is further limited based on the power source identification (for example, USB D+/D- resistor network values for 1.0 A or USB enumeration for 500 mA).

The C962 includes:

- Overvoltage protection (OVP).
- Overcurrent protection (OCP).
- Overtemperature protection (OTP).
- Foreign object detection (FOD).

72.3.1.1 Internal Power Supply

The accessory's internal power supply for the C962 control module shall:

- Support a load of 0 W to 5 W (1 A at 5 V).
- Regulate input voltage at the PWR pin of the C962 to 4.75 V - 5.5 V under any supported load.
- Hold PWR ripple below 20 mVpp under any supported load.
- Use one of the following to declare its power providing capability:
  - Connect USB D+/D- to a resistor network, as shown in Figure 55-1 (page 423), using resistor values for a 1000 mA power source as defined in Table 55-1 (page 424).
  - Connect USB CC to a source termination resistor (Rp) for a 1.5 A power source according to the *USB Type-C Cable and Connector Specification Release 1.3*, section 4.6.2.

72.3.1.2 External USB Power Source

Accessories relying on an external USB power source to provide power to the C962 shall:

- Have maximum 95 mΩ round trip DCR (USB VBUS to Ground) between the C962 control module and the accessory's USB-A plug or USB-C Plug (page 829).
- Pass the USB-IF Full Speed signal quality test. See Full Speed USB (page 826) and Full Speed USB (page 837).
- Meet the USB-IF inrush current specification of 51.5 µC.
- Meet the USB-IF suspend current specification of 2.5 mA in the following test scenarios:
  - *Suspend Current in USBIFCV on PC*
  - *Suspend Current in HSET on PC*
  - *Suspend Current With PC*

See the USB-IF *Full and Low Speed Electrical and Interoperability Compliance Test Procedure* and *Gold Suite Test Procedure* for USB-IF test procedures.

72.3.1.3 Apple Watch Charging Efficiency

Accessories integrating a C962 shall not impair Apple Watch's ability to efficiently charge from provided power.

2022-10-26 | Copyright © 2022 Apple Inc. All Rights Reserved.

72.3.2 Pads and Assignments

The C962 control module pad assignments are shown in Watch Fast Charger Control Module Dimensions (page 669).

Table 72-2 Watch Fast Charger Control Module Pads

Pad	Name	Assignment
1	PWR	USB VBUS
2	USB D-	USB D-
3	USB D+	USB D+
4	USB CC	USB CC
5	GND	USB Ground
6	COIL-	See Table 72-3 (page 658).
7	GND	See Table 72-3 (page 658).
8	COIL+	See Table 72-3 (page 658).

Signals from the USB D+ and D- pads shall be routed as a differential pair.

The C962 inductive coil module pad assignments are shown in Watch Fast Charger Inductive Coil Module Dimensions (page 668).

Table 72-3 Watch Fast Charger Inductive Coil Module Pads

Pad	Name	Assignment
1	COIL-	See Table 72-2 (page 658).
2	GND	See Table 72-2 (page 658).
3	COIL+	See Table 72-2 (page 658).

The C962 inductive coil module housing shall be grounded. Metallic accessory housings shall share the same ground as the C962 inductive coil module housing.

72.3.3 Operating Frequency

The C962 operates at 326.5 kHz and 1.778 MHz.

72.3.4 Cable

The C962 inductive coil module and C962 control module shall be connected by a cable consisting of COIL+ / COIL- signals and a cable shield for GND.

The cable connecting the C962 control module and C962 inductive coil module shall:

- Have an AC resistance of at least 80 mΩ at 1.778 MHz.

Copyright © 2022 Apple Inc. All Rights Reserved.

- Meet the AC resistance, AC inductance, and parallel capacitance limits defined in Figure 72-3 (page 659) and Figure 72-4 (page 660) when measured according to the procedures in Measuring Cable Performance (page 660).

Figure 72-3 Watch Fast Charger Module cable requirements at 326.5 kHz

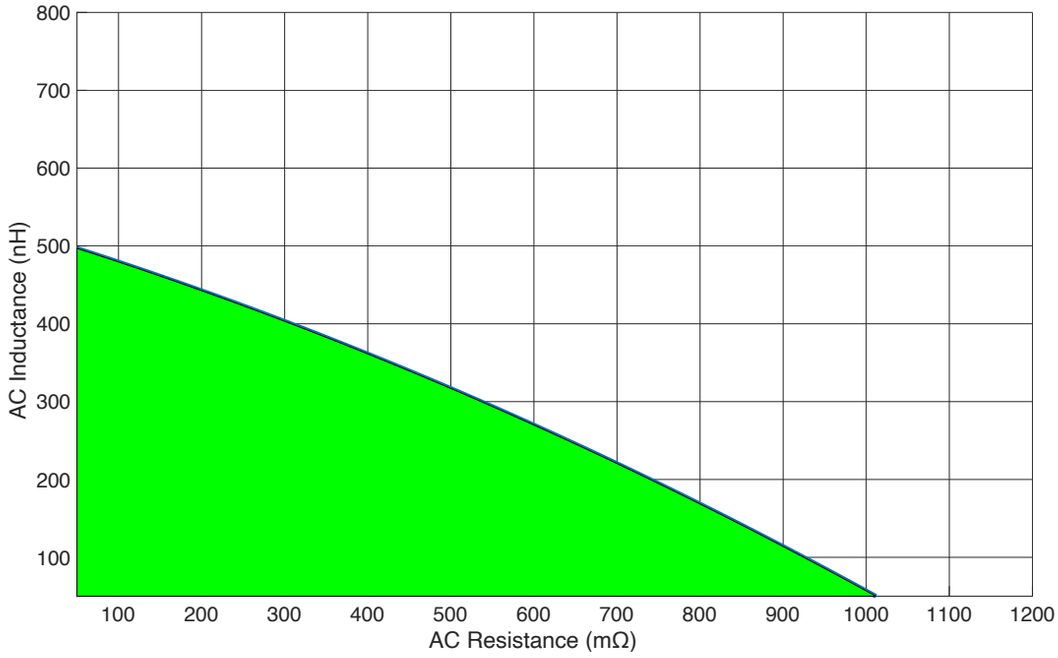

Copyright © 2022 Apple Inc. All Rights Reserved.

Figure 72-4 Watch Fast Charger Module cable requirements at 1.778 MHz

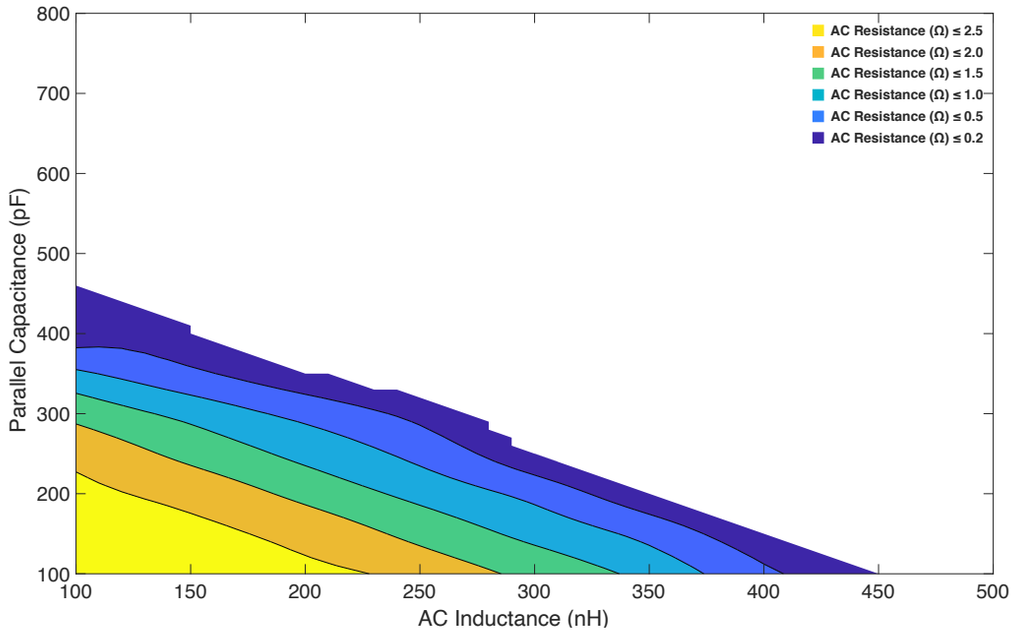

72.3.4.1 Measuring Cable Performance

AC resistance and AC inductance shall be measured between the COIL+ and COIL- signals at one end of the cable, shorting COIL+ / COIL- at the other end of the cable.

Parallel capacitance shall be measured between COIL+ and the COIL- signals at one end of the cable, leaving COIL+ / COIL- at the other end of the cable open.

Measurements should be taken when the cable is straight. Ground shielding should be left floating for all measurements.

Recommended equipment for measuring cable performance:

- VNA
- LCR meter
- Impedance analyzer

Recommended VNA settings:

- Set IF Bandwidth 10 kHz.
- Perform calibration from 100 kHz to 10 MHz.
- Max number of points.
- Markers set to the operating frequencies defined in Operating Frequency (page 658).

Copyright © 2022 Apple Inc. All Rights Reserved.

72.3.5 EMC

Accessories integrating the C962 should be designed for Electromagnetic Compatibility (EMC) (page 328).

A variety of Apple Watch models and wristband combinations should be tested with the C962 accessory for EMC performance.

Accessories with metal enclosures should ensure a reliable electrical and mechanical connection between the accessory enclosure and the C962 inductive coil module to avoid a secondary discharge to the C962 inductive coil.

The cable shield connecting the C962 inductive coil module should be connected as in Figure 72-5 (page 661) by:

1. Twisting one half and soldering it onto the C962 inductive coil module ground.
2. Folding back one half and laser welding to the shell.

Figure 72-5 Cable and C962 Inductive Coil Module

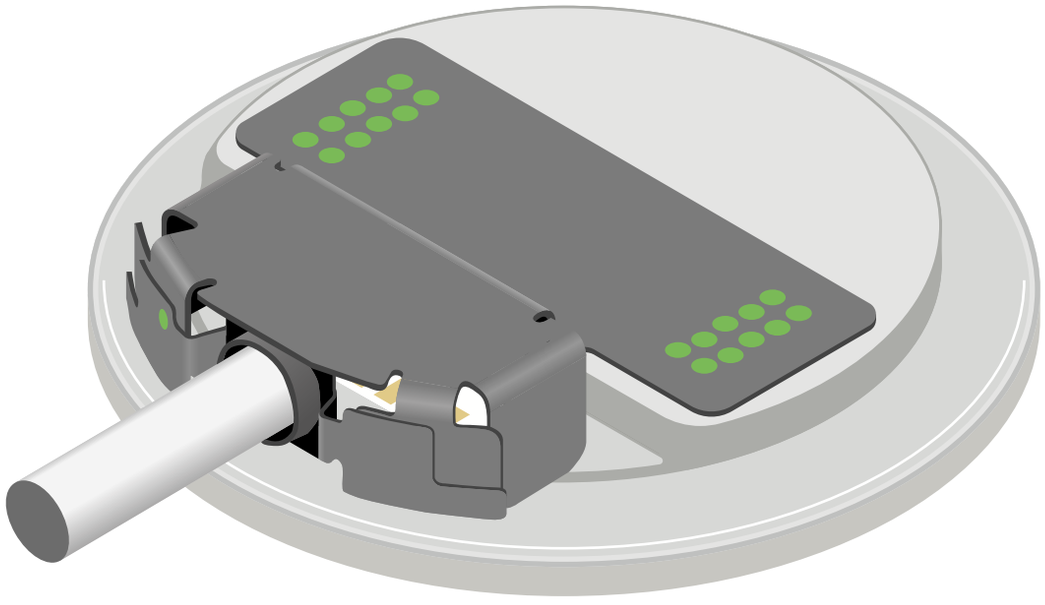

The cable shield connecting the C962 control module should be connected as in Figure 72-6 (page 662) by:

1. Twisting one half and soldering it onto the C962 control module ground.
2. Folding back one half and laser welding to the crimp.

Copyright © 2022 Apple Inc. All Rights Reserved.

Accessories with a USB connector and longer USB D+/D- signal wires should consider additional ESD protection such as differential TVS diodes.

Figure 72-6 Cable Crimp

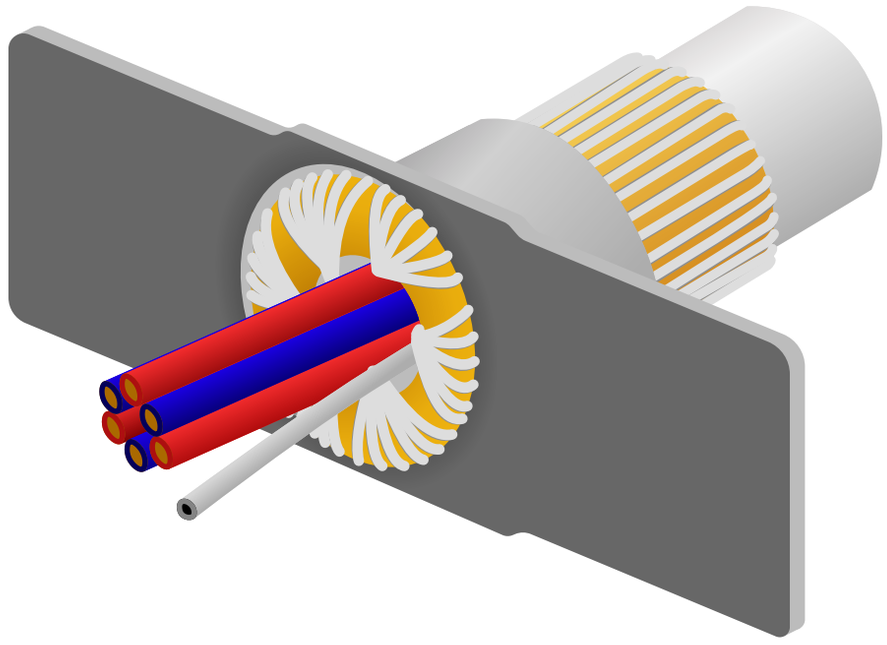

An EMI shell for the C962 control module should be used. The EMI shell should be connected to the system ground.

C962 control module ground DC resistance should be <1 Ω.

RF absorber material may be wrapped around the cable core to further attenuate EMI noise and reduce emissions. Wrap the absorber material around the shield before applying the jacket. The absorber should be >35 µm thick and should have:

- µ' > 90, µ" > 35 @ 30 MHz.
- µ' > 60, µ" > 40 @ 100 MHz.

Note:
Accessories with cables >30 cm may benefit the most from added RF absorbers.

2022-10-26 | Copyright © 2022 Apple Inc. All Rights Reserved.

Figure 72-7 Cable Absorber

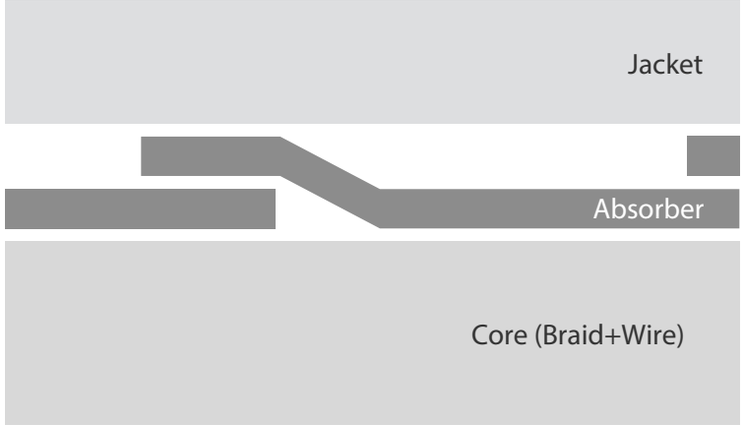

Figure 72-8 Cable Core

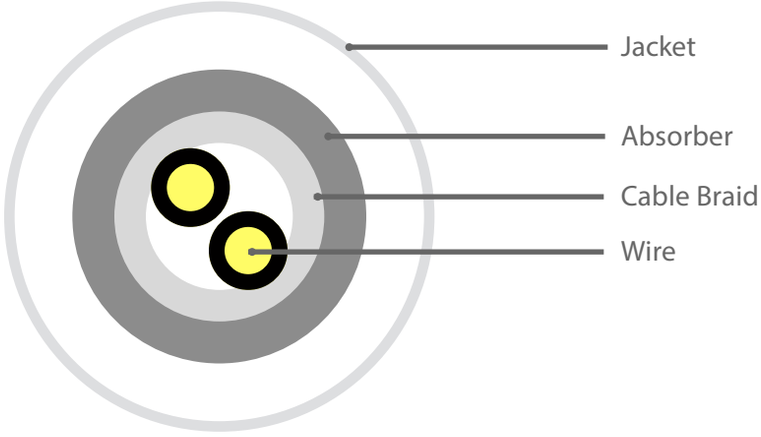

Copyright © 2022 Apple Inc. All Rights Reserved.

A common mode choke effective at 30-100 MHz should be included in the accessory's internal power supply or in any bundled power adapters. The common mode choke should have:

- Z > 200 Ω @ 30 MHz.
- Z > 500 Ω @ 100 MHz.

If the accessory includes a bundled power adapter, a ferrite core with high impedance in 30-100 MHz frequency range may be added to the power cord to reduce emissions. The ferrite core should have:

- Z > 130 Ω @ 25 MHz.
- Z > 260 Ω @ 100 MHz.

To reduce common mode noise potential, the accessory may include grounded metal outside of the module area to increase capacitance between the accessory and the device.

72.3.6 Inductive Coil

The C962 inductive coil has 9 turns with an outer diameter of ≈21.34 mm.

When an Apple Watch is attached, the C962 inductive coil module has an effective temperature limit of 45 °C.

72.4 Control Module

The C962 control module has a 60 °C temperature limit.

72.4.1 Firmware Update Over USB

C962 control module supports firmware updates over USB-C from Mac computers. To register an accessory for this support, email a request to `mfi-uarp-adopters@group.apple.com` with the following:

- Email subject containing the:
  - Module name ("C962").
  - Accessory's USB VID/PID in hex (for example, "XXXX/XXXX").
- Email body containing:
  - Requesting company's name.
  - MFi Product Plan UID (PPUID) from the MFi portal (for example, "XXXXXXXXXXXXXXXX").
  - MFi Product Plan ID (PPID) from the MFi portal (for example, "XXXXXX-XXXXXX").
  - Enable after date (optional).

2022-10-26 | Copyright © 2022 Apple Inc. All Rights Reserved.

72.5 Factory Configuration

The C962 exposes a USB HID interface to use for factory configuration. Connect the pads to a cable terminating in a USB-A plug or USB-C plug to access the interface.

The C962 factory configuration reference app available in the MFi Portal provides commands to set and read each configuration parameter.

72.5.1 Parameters

The following parameters shall be configured at the time of accessory manufacturing:

- Vendor ID (page 665)
- Product ID (page 665)
- Product Plan UID (page 665)
- Vendor Name (page 666)
- Product Name (page 666)
- Model Number (page 666)
- Serial Number (page 666)
- Power Mode (page 666)
- AC Resistance (page 666)
- Vendor Lock (page 666)

Every C962:

- Shall set the Vendor ID (VID) as assigned by the USB-IF and a unique Product ID (PID) assigned by the accessory developer. The VID shall correspond to the brand name appearing on the accessory or its packaging. See USB Host Mode (page 491).
- Shall set the Vendor Name, Product Name, and Model Number to human-readable strings matching names appearing on the accessory or its packaging.
- Shall not be configured with empty strings or generic string values.
- Shall be configured with a unique serialized Serial Number.

72.5.1.1 Vendor ID

The vendor ID (VID) from the manufacturer.

72.5.1.2 Product ID

The product ID (PID) from the manufacturer.

72.5.1.3 Product Plan UID

The Product Plan's UID (PPUID) from the MFi portal (up to 36 UTF8 characters). Note: the Product Plan UID is different from the Product Plan ID.

Copyright © 2022 Apple Inc. All Rights Reserved.

72.5.1.4 Vendor Name

The vendor name from the manufacturer (up to 64 UTF8 characters).

72.5.1.5 Product Name

The product name from the manufacturer (up to 64 UTF8 characters).

72.5.1.6 Model Number

The model number from the manufacturer (up to 32 UTF8 characters).

72.5.1.7 Serial Number

The serial number from the manufacturer (up to 32 UTF8 characters).

72.5.1.8 Power Mode

A number indicating the power mode:

- 1 = USB-A mode.
- 2 = USB-C / USB-PD mode.
- 3 = 5 V mode. Input voltage and operating current range is fixed.
- All other values are reserved.

72.5.1.9 AC Resistance

The AC resistance (in mΩ) measured at 326.5 kHz of the Cable (page 658) connecting the C962 control module and C962 inductive coil module (for example, 500 for 500 mΩ).

72.5.1.10 Vendor Lock

A number indicating the configuration lock mode:

- 0 = Unlocked.
- 1 = Temporarily use the configured parameters to enumerate over USB on the next boot, then return to factory configuration mode on the following boot. This setting may be used to verify the parameters have been set correctly. This setting does not enable inductive charging.
- 2 = Permanently lock configuration on the next boot. This setting shall be used for all production units.
- All other values are reserved.

2022-10-26 | Copyright © 2022 Apple Inc. All Rights Reserved.

72.5.2 Examples

72.5.2.1 Configure, Verify, and Lock

The following is an example factory configuration sequence which permanently locks the C962 immediately after configuration:

1. Apply power to the C962 and connect to the USB HID interface.
2. Issues all commands to configure the C962 control module.
3. Verify all parameters are set to the expected values.
4. Set the Vendor Lock (page 666) to 2 (permanently lock firmware configuration).
5. Cycle power, the C962 permanently boots in production mode.

72.5.2.2 Configure and Test

The following is an example manual configuration sequence to tests the configuration, but does not permanently lock the C962:

1. Apply power to the C962 and connect to the USB HID interface.
2. Issues all commands to configure the C962 control module.
3. Set the Vendor Lock (page 666) to 1 (next boot will use configured parameter values for testing).
4. Cycle power.
5. The C962 boots, enumerating using the configured parameters.
6. Verify the C962 has been correctly configured using the following procedure on a Mac (or its equivalent for another computer/operating system combination):
   a. Open *System Information* on the Mac.
   b. Select *USB* under the *Hardware* category on the left pane.
   c. Verify the "Example Product" is listed in the USB device tree.
   d. Select the "Example Product" and verify all displayed values, for example, Product Name, Product ID, Vendor ID, Serial Number, Manufacturer (Vendor Name).
7. Cycle power and connect to the USB HID interface to continue configuration.

Copyright © 2022 Apple Inc. All Rights Reserved.

72.6 Watch Fast Charger Inductive Coil Module Dimensions

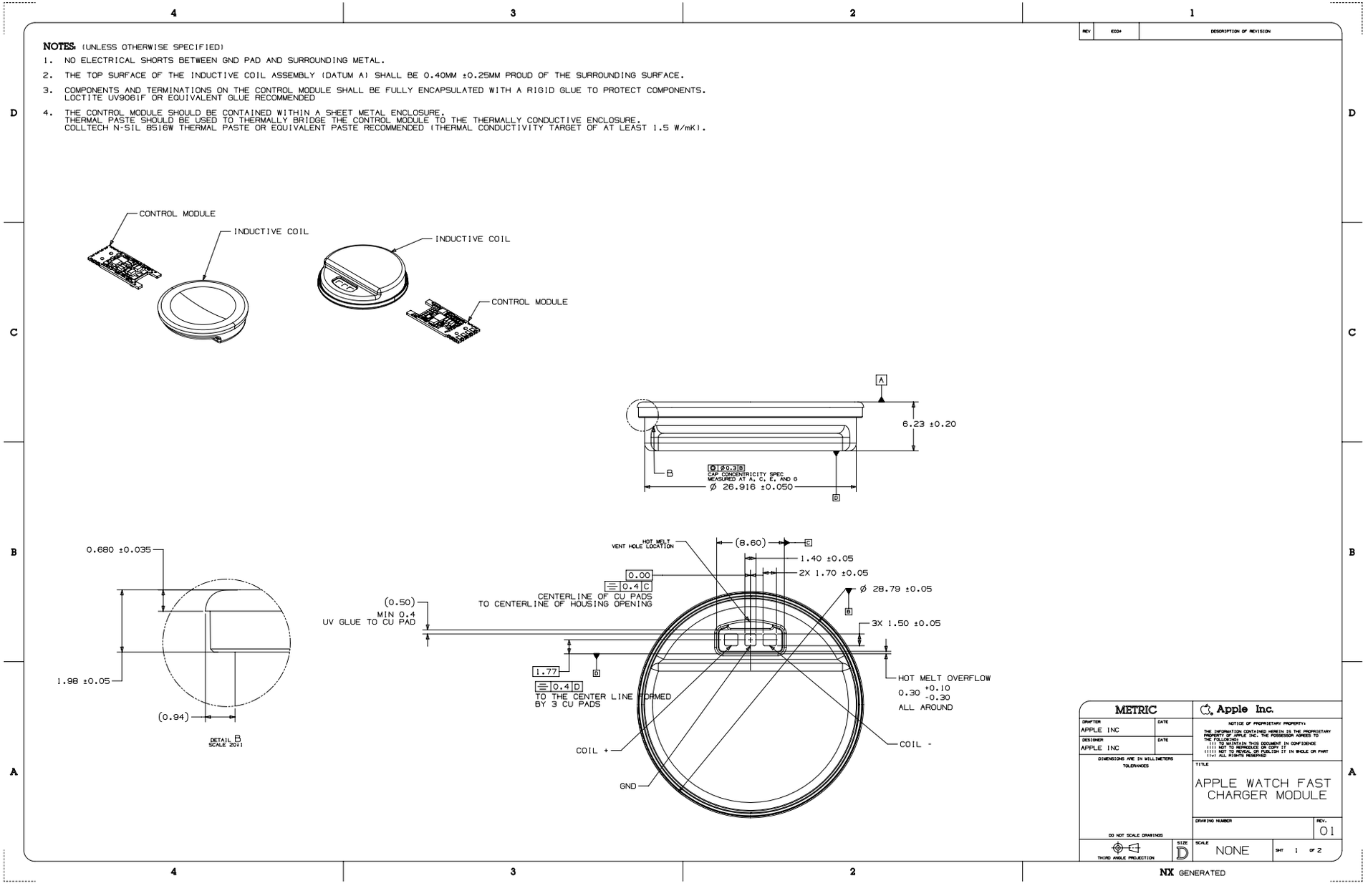

72.7 Watch Fast Charger Control Module Dimensions

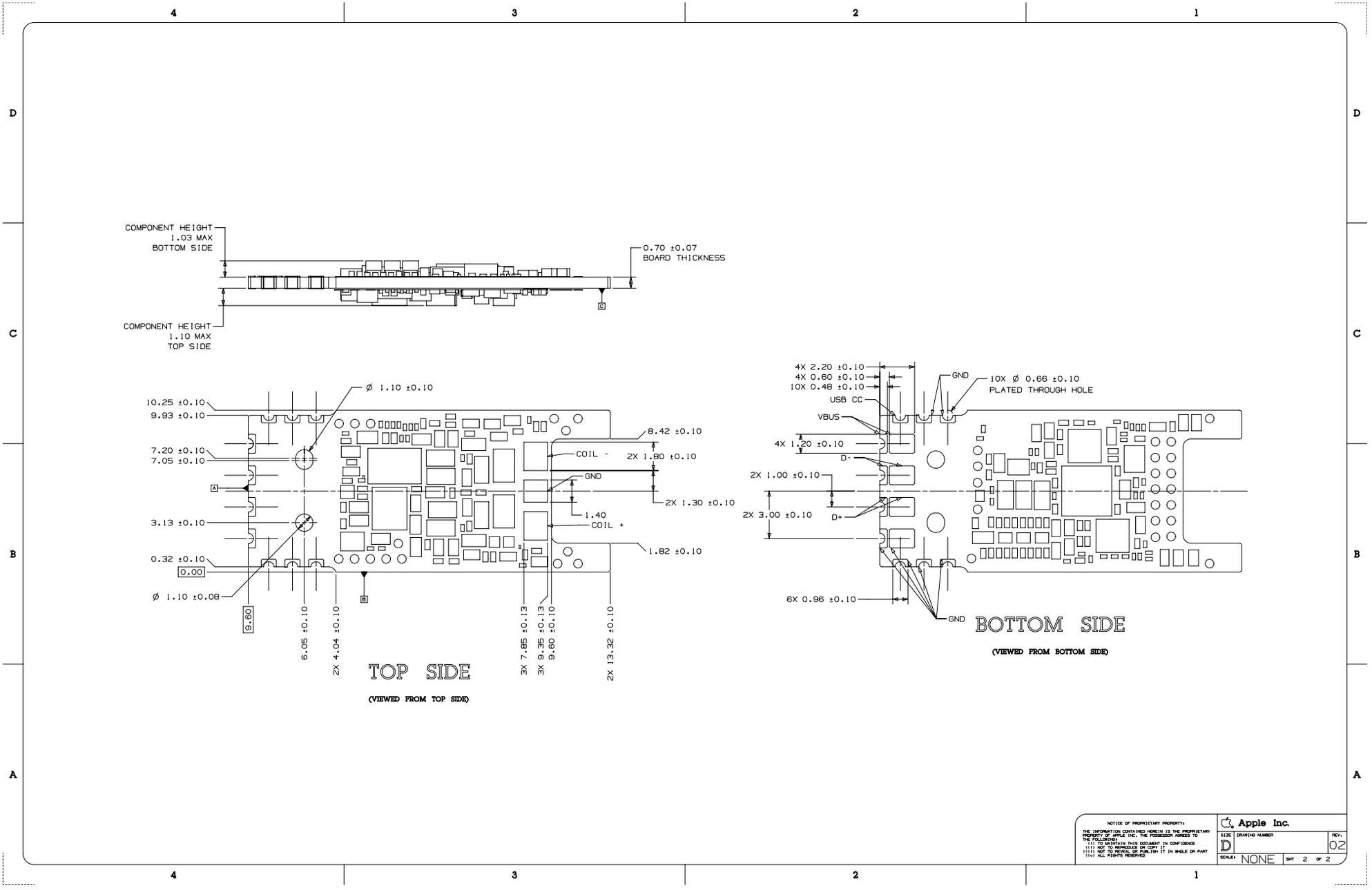

72.8 Test Procedures

Test procedures for accessories integrating the C962 are contained in this section. Tests should be performed with an Apple Watch 44 mm Stainless Steel Case with Link Bracelet.

72.8.1 Mechanical

This section contains mechanical test procedures for accessories integrating the C962.

72.8.1.1 Product Design

1. Verify the accessory:
   a. Is intended for stationary use.
   b. Does not require the watch band to be removed or detached.
   c. Does not scratch or damage the body of the Apple Watch or watch band when connected.
2. Verify the accessory does not have ferromagnetic steel in proximity to the C962.
3. Use calipers to verify the C962 is 0.40 mm ±0.25 mm proud of the accessory surface.

When mounted horizontally:

1. Use a protractor to verify the C962 is not mounted at an angle greater than 45° from horizontal.

When mounted vertically:

1. Verify the accessory's mounting angle is not adjustable.
2. Verify all Apple Watch model and band configurations are supported with the watch on its side (crown up).
3. Verify the accessory has an alignment feature ensuring the center of the Apple Watch aligns with the center of the C962 within ±1.0 mm.

72.8.1.2 Drop Test

1. Drop the accessory onto a plywood surface from a height of 32 inches.
2. Verify the C962 has not been dislodged from the dropped accessory.
3. Verify the dropped accessory continues to charge the Apple Watch.

72.8.2 Electrical

This section contains electrical test procedures for accessories integrating the C962.

72.8.2.1 Internal Power Supplies

This section contains electrical test procedures for accessories containing internal power supplies.

2022-10-26 | Copyright © 2022 Apple Inc. All Rights Reserved.

72.8.2.1.1 Equipment

The following equipment is needed to perform the electrical test procedures:

- An electronic load rated at 10 W or higher, capable of constant current (CC) mode.
- An oscilloscope with a 100 MHz or higher bandwidth.

72.8.2.1.2 Test Setup

1. Disconnect the C962 from the accessory's power source.
2. Connect the electronic load and the oscilloscope channel to VBUS and GND signals in the accessory.
3. Reconnect the C962 to the power source.

72.8.2.1.3 Supply Voltage (DC)

1. Configure the oscilloscope with:
   - Horizontal scale: 1 ms/div
   - Vertical scale: 1 V/div
   - Channel coupling: DC
2. With the electronic load set to CC mode, record the average VBUS voltage on the scope for each load from 0 A to 1 A in 200 mA steps.
3. Verify all the recorded values are within 4.75 V and 5.50 V.

72.8.2.1.4 Supply Voltage Ripple

1. Configure the oscilloscope with:
   - Horizontal scale: 1 ms/div
   - Vertical scale: 10 mV/div
   - Channel coupling: AC
2. With electronic load set to CC mode, record the peak-peak VBUS voltage on the scope using cursors for each load from 0 A to 1 A in 200 mA steps. Capture at least 10 cycles and measure the worst-case peak-peak voltage, adjusting the horizontal scale if necessary based on the frequency of the ripple.
3. Verify all recorded values are below 20 mV.

72.8.2.2 External USB Power Sources

This section contains electrical test procedures for accessories using external USB power sources.

72.8.2.2.1 Equipment

The following equipment is needed:

- DMM with 4-wire Kelvin sense capability
- USB Breakout Board (page 853) (if accessory uses a USB-A plug)

Copyright © 2022 Apple Inc. All Rights Reserved.

- USB-IF certified USB-C receptacle breakout board (if accessory uses a USB-C plug), see https://www.usb.org/compliancetools#anchor_electricaltools
- USB-C PD power source (if accessory uses a USB-C plug)

72.8.2.2.2 Test Setup

1. Disconnect the C962 from the accessory.

72.8.2.2.3 Round-Trip DC Resistance (DCR)

1. Connect the "Force" and "Sense" leads of the DMM to the VBUS and GND signals in the accessory.
2. Short the VBUS and GND signals at the USB plug using a USB breakout board.
3. Configure the DMM to perform a 4-wire Kelvin sense resistance measurement.

2022-10-26 | Copyright © 2022 Apple Inc. All Rights Reserved.

73. Apple Watch Charger Module

The Watch Charger Module (C162) enables accessories to charge the Apple Watch.

Figure 73-1 Watch Charger Module

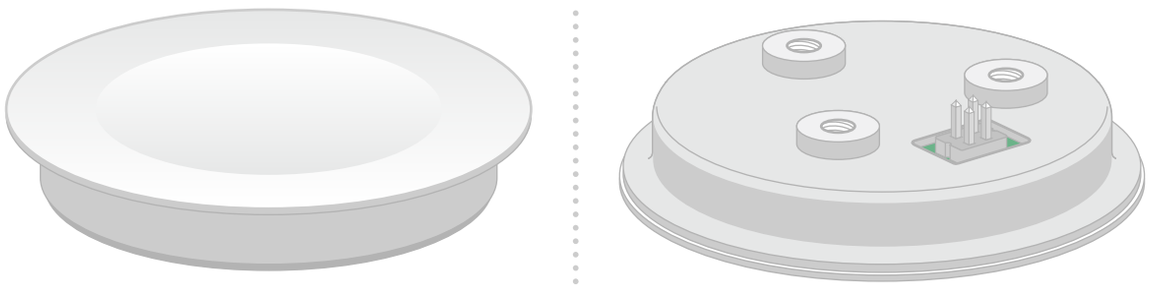

73.1 Accessory Integration

> **Note:**
> Charging accessories claiming compatibility with Apple Watch Ultra shall integrate the Apple Watch Fast Charger Module (page 652).

All C162 accessories shall:

- Provide power to Apple Watch. See Electrical (page 676).
- Hold the Apple Watch when it is magnetically connected to the C162.
- Permit the Apple Watch to move relative to the C162.
- Be intended for stationary use.

Accessories shall not integrate the C162 into wearable accessories such as wrist straps or watch bands.

73.2 Mechanical

See Watch Charger Module Dimensions (page 684) for dimensional drawing.

Copyright © 2022 Apple Inc. All Rights Reserved.
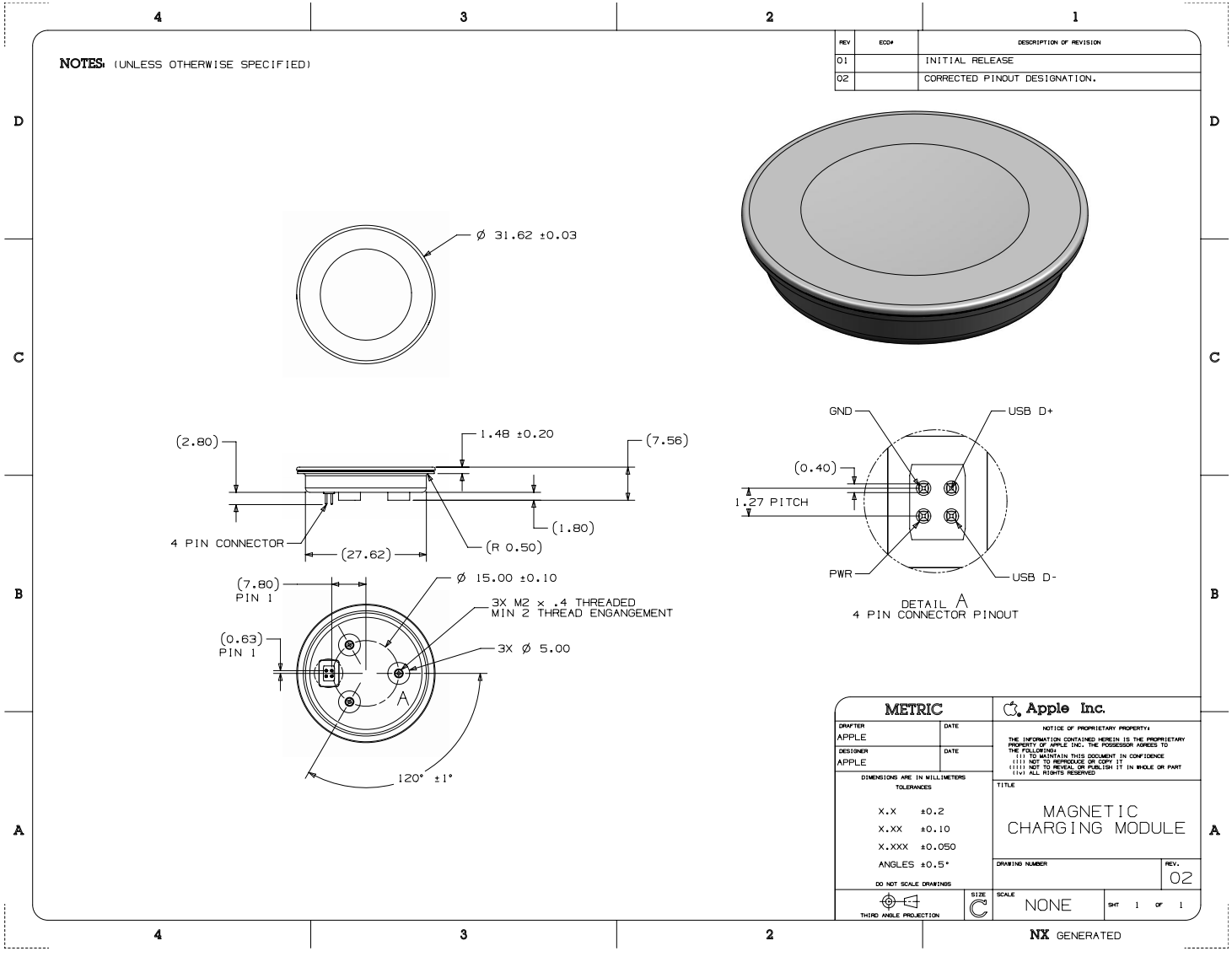
73.5 Watch Charger Module Dimensions