RF EXPOSURE Test Report

Product:	mophie Powerstation Wireless Slim Stand
Trade Mark:	mophie
Model Number:	Qi2-PS-5K-STND
FCC ID:	2ACWB-5KYXWST

Prepared for

mophie LLC

6244 Technology Ave. Kalamazoo,MI49009,United States of America.

Prepared by

Shenzhen HongBiao Certification& Testing Co., Ltd

Room 102, 201, Building 2, Yuanwanggu RFID Industrial Park, Tongguan Road, Tianliao Community, Yutang Street, Guangming District, Shenzhen, China

Tel.: +86-755-2998 9321 Fax.: +86-755-2998 5110

Website: http://www.sz-hongbiao.com

Table of Contents

1 GENERAL DESCRIPTION 5

1.1 DESCRIPTION OF EUT 5
1.2 TEST MODE 5
1.3 TEST SETUP 5
1.4 ANCILLARY EQUIPMENT 5

2 TEST FACILITIES AND ACCREDITATIONS 6

2.1 TEST LABORATORY 6
2.2 ENVIRONMENTAL CONDITIONS 6
2.3 MEASUREMENT UNCERTAINTY 6
2.4 TEST SOFTWARE 6

3 LIST OF TEST EQUIPMENT 7

4 RF EXPOSURE 8

4.1 MAXIMUM PERMISSIBLE EXPOSURE 8
4.1.1. Limit 8
4.1.2. Test Procedures 8
4.1.3. Test Setup 8
4.1.4. Test Result 9

5 PHOTOGRAPHS OF THE TEST SETUP 11

TEST RESULT CERTIFICATION

Applicant's Name..... :	mophie LLC
Address ..... :	6244 Technology Ave. Kalamazoo,MI49009,United States of America.
Manufacturer's Name ..... :	mophie LLC
Address ..... :	6244 Technology Ave. Kalamazoo,MI49009,United States of America.

Product description

Product name ..... :	mophie Powerstation Wireless Slim Stand
Model Number..... :	Qi2-PS-5K-STND
Standards..... :	FCC CFR 47 PART 1 , 1.1310
Test procedure..... :	KDB 680106 D01 Wireless Power Transfer v04

This device described above has been tested by Shenzhen HongBiao Certification& Testing Co., Ltd and the test results show that the equipment under test (EUT) is in compliance with the EMC requirements. And it is applicable only to the tested sample identified in the report.

Date of Test.....:

Date (s) of performance of tests.....:	June 12, 2025~ June 20, 2025
Test Result.....:	**Pass**

Testing Engineer : Zoe Su

(Zoe Su)

Technical Manager : Hans Mou

(Hans Mou)

Authorized Signatory : Leo Su

(Leo Su)

SHENZHEN HONGBIAO CERTIFICATION&TESTING CO., LTD
HONG BIAO 弘标认证 APPROVAL

Revision History

Revised No.	Date of Issue	Description
01	June 24, 2025	Original

1 General Description

1.1 Description of EUT

Product name:	mophie Powerstation Wireless Slim Stand
Model name:	Qi2-PS-5K-STND
Series Model:	N/A
Different of series model:	N/A
Operation frequency:	110.5kHz-205kHz, 360kHz
Operational mode:	Wireless charging
Modulation type:	ASK
Antenna type:	Coil Antenna
Battery:	3.85V, 5000mAh, 19.25Wh
Power supply:	(Input): USB-C: DC 5V/3A, DC 9V/2.22A, 20W Max (output): USB-C: DC 5V/3A, DC 9V/2.22A 20W Max, Magnetic Wireless Output: MPP 15W Max Total output: 15W Max
Adapter information:	N/A

1.2 Test Mode

Pretest Test Mode	Description of Mode
1	Wireless Output: 5W
2	Wireless Output: 7.5W
3	Wireless Output: 10W
4	Wireless Output: 15W

1.3 Test Setup

See photographs of the test setup in the report for the actual setup and connections between EUT and support equipment.

1.4 Ancillary Equipment

Equipment	Model	S/N	Manufacturer
Phone	iPhone 12pro Max	FF2LDX4T60D5H	Apple Inc
Phone	iPhone 12pro	DNPF9UL20D9L	Apple Inc.
Phone	LE2120	860284056441073	Shenzhen Oneplus Technology Co., Ltd

2 Test Facilities and Accreditations

2.1 Test Laboratory

Test Site	Shenzhen HongBiao Certification& Testing Co., Ltd
Test Site Location	Room 102, 201, Building 2, Yuanwanggu RFID Industrial Park, Tongguan Road, Tianliao Community, Yutang Street, Guangming District, Shenzhen, China
Telephone:	(86-755) 2998 9321
Fax:	(86-755) 2998 5110
FCC Registration No.:	CN1341
A2LA Certificate No.:	6765.01

2.2 Environmental Conditions

During the measurement the environmental conditions were within the listed ranges:

Temperature:	15ºC~35ºC
Relative Humidity:	20%~75%
Air Pressure:	98kPa~101kPa

2.3 Measurement Uncertainty

The reported uncertainty of measurement y ± U, where expended uncertainty U is based on a standard uncertainty multiplied by a coverage factor of k=2, providing a level of confidence of approximately 95 %.
The data and results quoted in this document are true and accurate values, and uncertainties are not involved in the calculations.
In addition, components and mass production processes that are similar to testing equipment may introduce additional deviations, and the manufacturer is solely responsible for the continued compliance of the equipment.

Measurement Frequency Range	U, (dB)	Note
RF frequency	$2x\ 10^{-5}$	
E-field	± 2.5 dB	
H-field	± 4.2 dB	
Temperature	±1 degree	
Humidity	± 5 %	

2.4 Test Software

Software name	Manufacturer	Model	Version
MAGPy V2.6	Schmid & Partner Engineering AG	MAGPy V2.6	V2.6

3 List of Test Equipment

Item	Equipment No.	Equipment name	Manufacturer	Model	Serial No.	Calibration date	Due date
1	HB-E077	Magnetic Amplitude and Gradient Probe System	Schmid & Partner Engineering AG	MAGPy -8H3D+E3D	3107	2024-03-15	2026-03-14
2	HB-E078	Magnetic Amplitude and Gradient Probe System	Schmid & Partner Engineering AG	MAGPy-DAS	3097	2024-03-15	2026-03-14

Note: the calibration interval of the above test instruments is 24 months and the calibrations are traceable to international system unit (SI).

4 RF Exposure

4.1 Maximum Permissible Exposure

4.1.1. Limit

Frequency range(MHz)	Electric field strength(V/m)	Magnetic field strength(A/m)	Power density(mW/cm2)	Averaging time(minutes)
(A) Limits for Occupational/Controlled Exposure				
0.3-3.0	614	1.63	*100	6
3.0-30	1842/f	4.89/f	*900/f^2	6
30-300	61.4	0.163	1.0 6	6
300-1500			f/300	6
1500-100000			5	6
(B) Limits for General Population/Uncontrolled Exposure				
0.3-1.34	614	1.63	*100	30
1.34-30	824/f	2.19/f	*180/f^2	30
30-300	27.5	0.073	0.2	30
300-1500			f/1500	30
1500-100000			1	30
f = frequency in MHz * = Plane-wave equivalent power density				

4.1.2. Test Procedures

a. The RF exposure test was performed in anechoic chamber.

b. Perform H-field measurements for each edge/top surface of the host/client pair at every 2 cm, starting from as close as possible out to 20 cm.

c. The highest emission level was recorded and compared with limit.

4.1.3. Test Setup

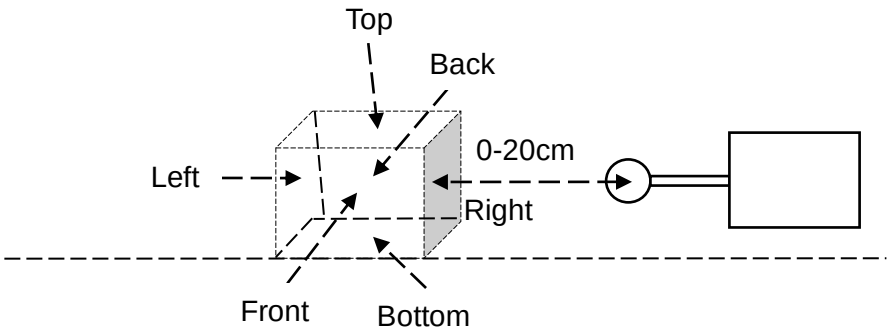

4.1.4. Test Result

For portable exposure condition:

Operating modes with client device (1 %, 50%, 99% battery status of client device) have been test, only show the data of worst case of 1% battery status of client device.

H-field measurements taken every 2 cm (starting as close to 20 cm as possible) on each edge/top surface of the host/client pair were also evaluated for portable use conditions. The report reflects data for the worst 0 cm test distance mode only.

Test condition 1: Mode 3 operating mode with client device (1 % battery status of client device). Measurement results directly tested using MAGPy.

Maximum permissible Exposure(110.5kHz-205kHz)				
Battery levels	Test sides	Test distance(cm)	E –field(V/m)	H–field(A/m)
<1%	Top	0	22.5	0.13
<1%	Left	0	25.5	0.25
<1%	Right	0	12.95	0.34
<1%	Front	0	11.8	0.39
<1%	Back	0	12.3	0.42
<1%	Bottom	0	35.2	0.13
Limit			614	1.63
Margin Limit (%)			5.73%	25.77%

When setting MAGPy to select compliance location as probe tip, the measured value is extrapolated to 0mm as the result.

Maximum permissible Exposure(110.5kHz-205kHz)				
Battery levels	Test sides	Test distance(cm)	E –field(V/m)	H–field(A/m)
<1%	Top	0	40.3	1.05
<1%	Left	0	37.7	0.29
<1%	Right	0	30.4	1.22
<1%	Front	0	14.4	1.45
<1%	Back	0	9.16	1.16
<1%	Bottom	0	21.8	0.44
Limit			614	1.63
Margin Limit (%)			6.56%	88.96%

Test condition 2: Mode 4 operating mode with client device (1 % battery status of client device). Measurement results directly tested using MAGPy.

Maximum permissible Exposure(360kHz)				
Battery levels	Test sides	Test distance(cm)	E –field(V/m)	H–field(A/m)
<1%	Top	0	17.2	0.08
<1%	Left	0	25.8	0.07
<1%	Right	0	8.34	0.1
<1%	Front	0	6.29	0.13
<1%	Back	0	14.6	0.26
<1%	Bottom	0	22.8	0.13
Limit			614	1.63
Margin Limit (%)			4.2%	15.95%

When setting MAGPy to select compliance location as probe tip, the measured value is extrapolated to 0mm as the result.

Maximum permissible Exposure(360kHz)				
Battery levels	Test sides	Test distance(cm)	E –field(V/m)	H–field(A/m)
<1%	Top	0	20.2	0.25
<1%	Left	0	44.7	0.15
<1%	Right	0	13.5	0.65
<1%	Front	0	9.9	0.74
<1%	Back	0	17.6	1.18
<1%	Bottom	0	14.9	0.34
Limit			614	1.63
Margin Limit (%)			7.28%	72.39%

5 Photographs of the Test Setup

Photo 1

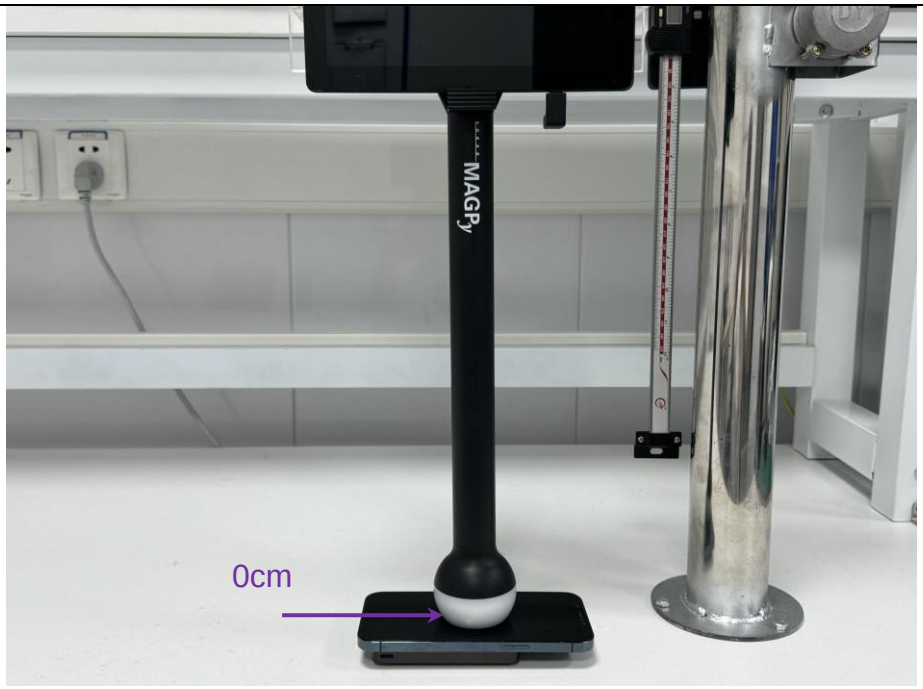

Photo 2

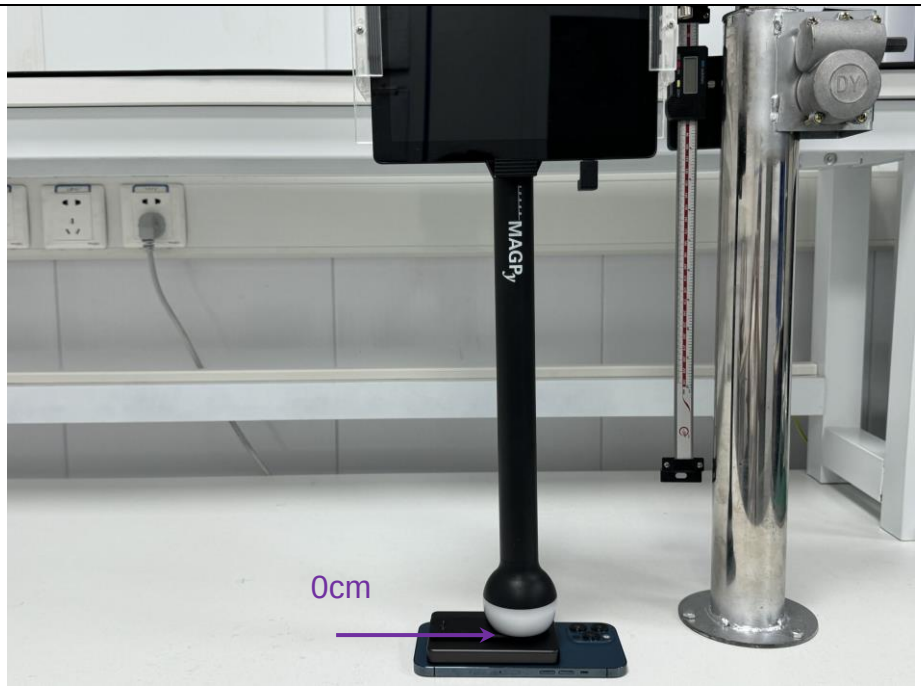

Photo 3

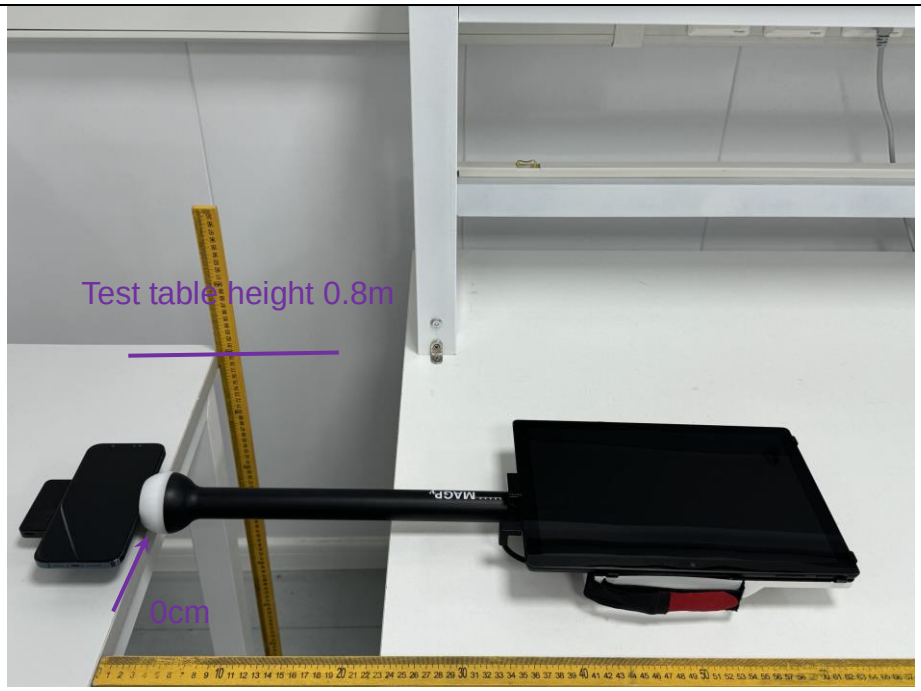

Photo 4

Photo 5

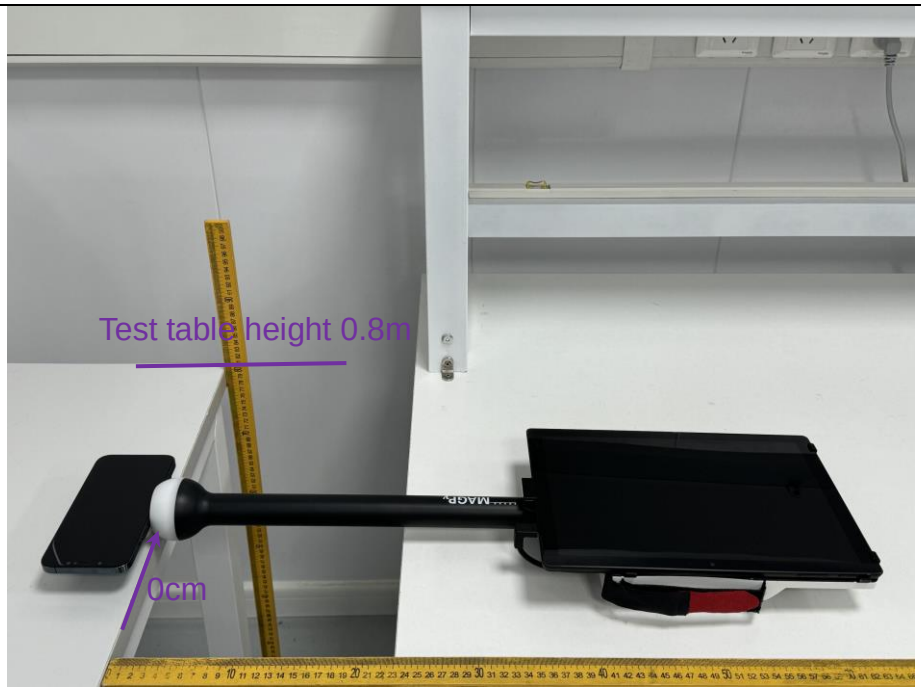

Photo 6

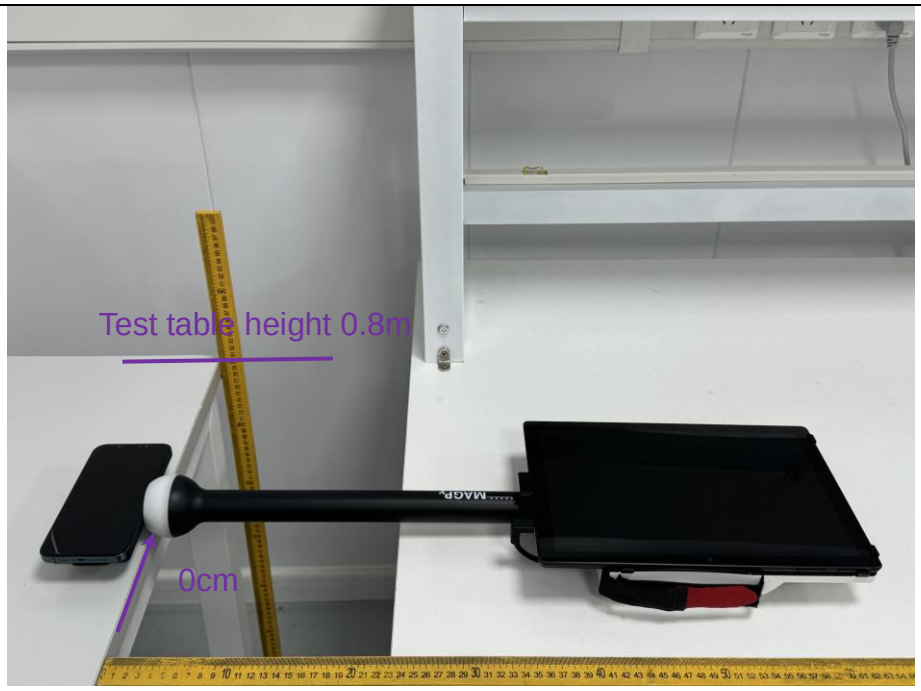

******** END OF REPORT ********