SPECIFICATIONS

The information contained herein is the exclusive property of ZK and shall not be distribwritten permission of ZK

Version : V1.40

Date : 2015.08.19

MODEL NAME: ZK-7662

PRODUCT NAME:Wi-Fi Module

中 科 联 合 通 信 技 术 有 限 公 司
Tel:86-755-61617105 Fax:86-755-61617110
Mobile:13926580539
E-mail::zkma@zk-sz.com
Add:深圳市南山深南大道北侧佳嘉豪商务大厦6C

企业远景：中国无线通信模块第一品牌！

1. Features

ZK-7662 is the small size and low power module for IEEE 802.11a/b/g/n wireless LAN. **ZK-7662** is based on MT7662 solution. IEEE802.11 a/b/g/n Dual Band WLAN infrastructure Size : 27mm x 12.7mm x 2.4mm

2.4GHz&5GHZ internal PA

Two stream spatial multiplexing up to 867/300Mbps ANT (2T2R)

Use on-chip OTP (One-Time Programmable)

MT7662 USB 2.0

USB/WiFi 2.0

USB/Bluetooth V4.0 Low energy(LE)

Supports drivers for Windows Vista, 2000, XP, Linux

Security : WPA,WPA2,AES(TKIP) ,IEEE 802.1X

• Application: DTV, DVR, HD DVD Player, Blue-ray Disk Player, STB

2. Ordering Information

Model	Description	Manufacturer
ZK-7662	Wi-Fi Module, 2T2R	CT Unite Communication Technology Ltd
CT-2128-2.4-5.8 CT-1928-2.4-5.8	WIFI antenna 2 PCS	Boomtech Industry Co.,Ltd
CT-1424-BT	BT antenna	Boomtech Industry Co.,Ltd

3. Label markin

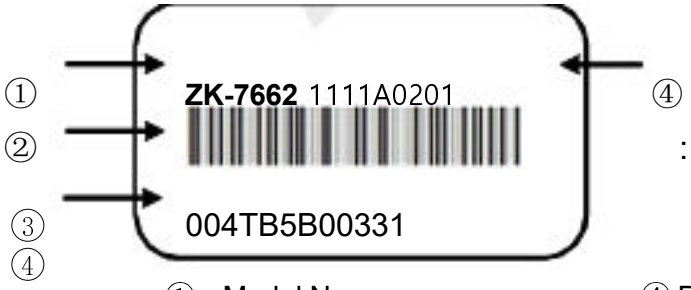

① Model No

② MAC Address BAR Code

③ MAC Address No.

④ Product Lot No. : 1110A0401

-11 : Year - 02 : Date

- 11: Month - 01 : Manufactured Process

- Revision No. : A

2. Block Diagram

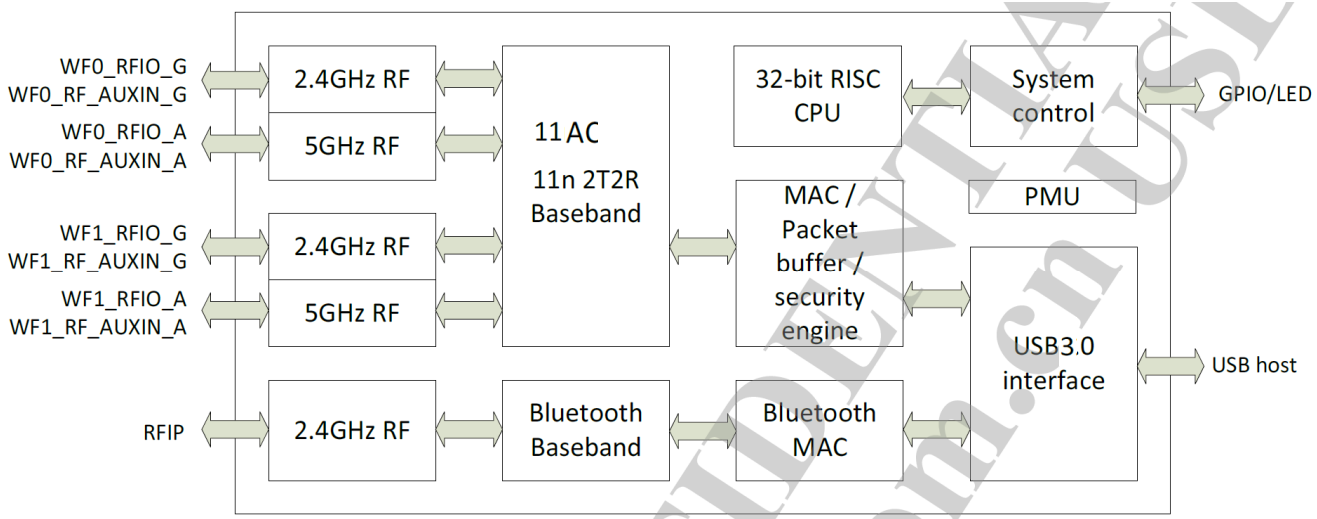

< Fig.1 Hardware Block Diagram >

3. Absolute Maximum Ratings

Caution : The specifications in Table 1 define levels at which permanent damage to the device can occur. Function operation is not guaranteed under these conditions. Operating at absolute maximum conditions for extend periods can adversely affect the long-term reliability of the device.

Parameter	Min	Max	Unit
Storage Temperature	-10	+80℃	℃
Storage Humidity (40℃)	-	90%	%

< Table 1 Absolute Maximum Ratings > . Other conditions

1) Do not use or store modules in the corrosive atmosphere, especially where chloride gas, sulfide gas, acid, alkali, salt or the like are contained. Also, avoid exposure to moisture.

2) Store the modules where the temperature and relative humidity do not exceed 5 to 40℃ and 20 to 60%.

3) Assemble the modules within 6 months.
Check the soldering ability in case of 6 months over.

4. Pin Description

Terminal No	Terminal name	Terminal Voltage
1	WiFi RST	WiFi RST
2	GND	GND;
3	UDP	UDP
4	UDM	UDM
5	VDD3.3V	3.3V
6	BT Wake	WIFI Wake, IO
7	GND	
8	WIFI ANT1	WIFI ANT1
9	GND	
10	BT ANT	BT
11	GND	
12	WIFI ANT2	WIFI ANT2
13	GND	

CT-UNITE		DOCUMENT No :
REG.DATE :2015.08.19	SPECIFICATION MODEL NAME : **ZK-7662**	REV.NO : 1.5
REV.DATE :2015.08.19		PAGE : 10/11

5. Pin Description

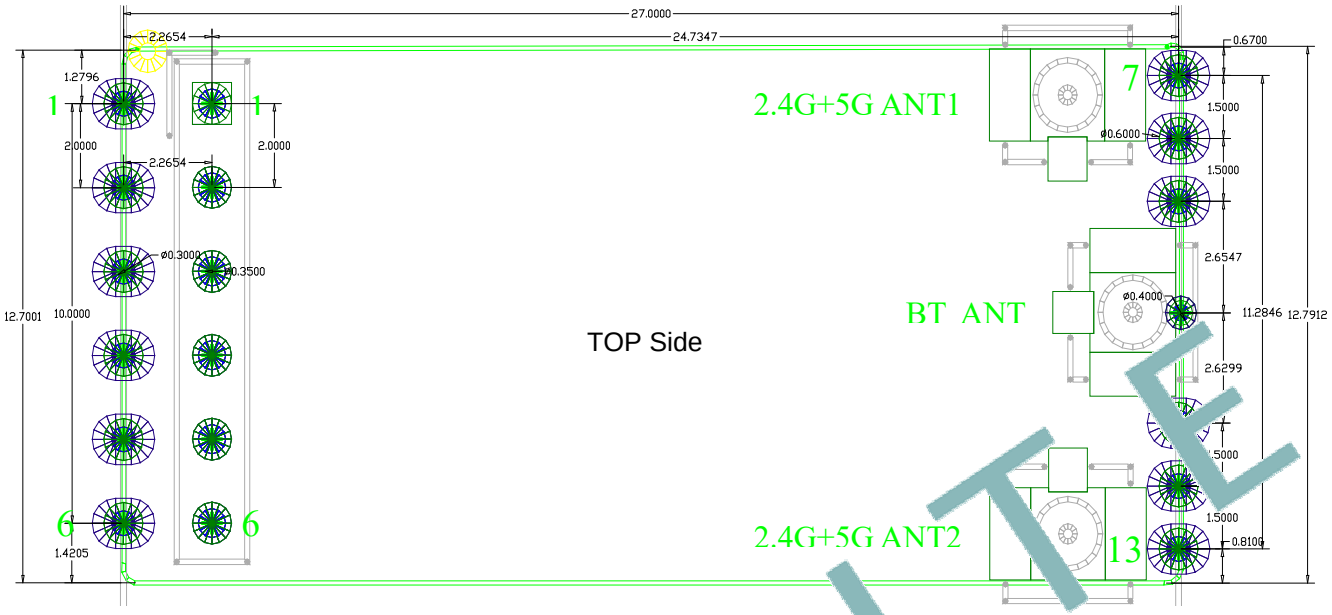

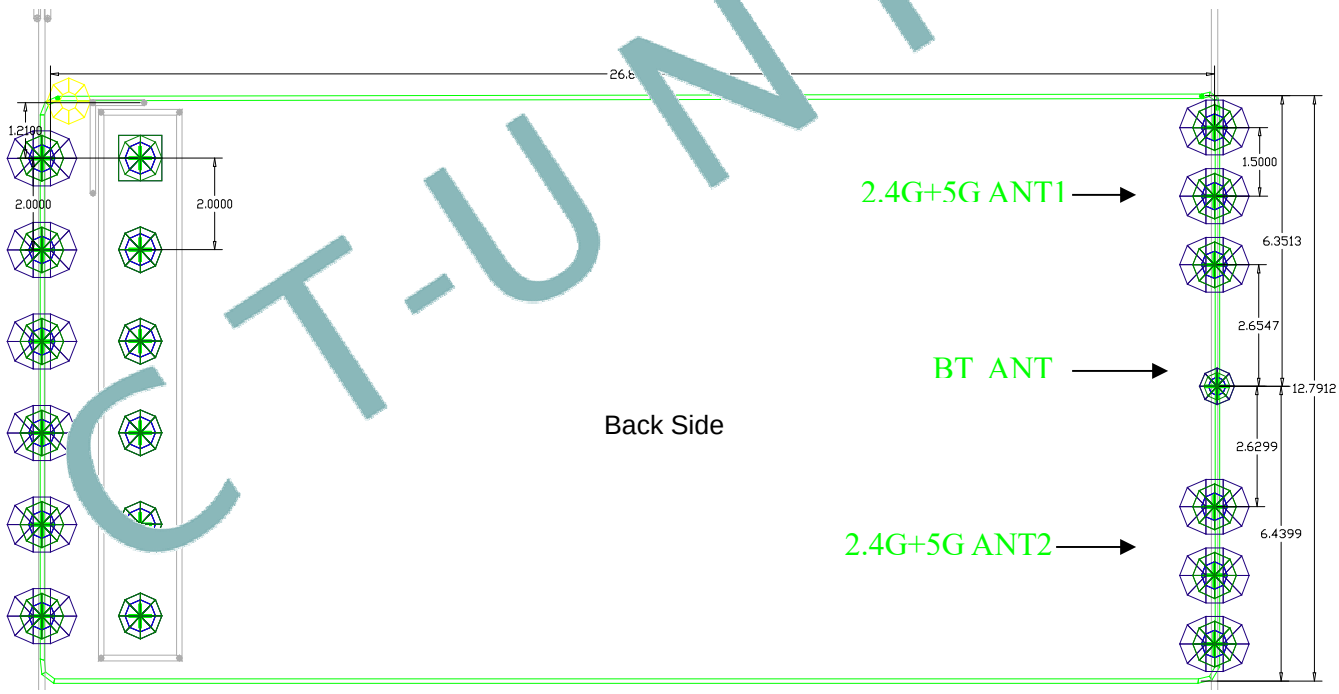

CT-UNITE

6. FCC Statement

This device complies with Part 15 of the FCC rules. Operation is subject to the following two conditions: 1) this device may not cause harmful interference, and 2) this device must accept any interference received, including interference that may cause undesired operation.
Note: This equipment has been tested and found to comply with the limits for a Class B digital device, pursuant to part 15 of the FCC Rules. These limits are designed to provide reasonable protection against harmful interference in a residential installation. This equipment generates uses and can radiate radio frequency energy and, if not installed and used in accordance with the instructions, may cause harmful interference to radio communications. However, there is no guarantee that interference will not occur in particular installation. If this equipment does cause harmful interference to radio or television reception, which can be determined by turning the equipment off and on, the user is encouraged to try to correct the interference by one or more of the following measures:
--Reorient or relocate the receiving antenna.
--Increase the separation between the equipment and receiver.
--Connect the equipment into an outlet on a circuit different from that to which the receiver is connected.
--Consult the dealer or an experienced radio/TV technician for help.
Changes or modifications not expressly approved by the party responsible for compliance could void the user’s authority to operate the equipment.

FCC Radiation Exposure Statement

The modular can be installed or integrated as indoor access point operating use only.This transmitter must not be co-located or operating in conjunction with any other antenna or transmitter. This modular must be installed and operated with a minimum distance of 20 cm between the radiator and user body.

If the FCC identification number is not visible when the module is installed inside another device, then the outside of the device into which the module is installed must also display a label referring to the enclosed module. This exterior label can use wording such as the following: “Contains Transmitter Module FCC ID: 2ACWK76X2;Or Contains FCC ID: 2ACWK76X2”

When the module is installed inside another device, the user manual of this device must contain below warning statements; 1. This device complies with Part 15 of the FCC Rules. Operation is subject to the following two conditions: (1) This device may not cause harmful interference. (2) This device must accept any interference received, including interference that may cause undesired operation. 2. Changes or modifications not expressly approved by the party responsible for compliance could void the user's authority to operate the equipment. The devices must be installed and used in strict accordance with the manufacturer's instructions as described in the user documentation that comes with the product.
Any company of the host device which install this modular with limit modular approval should perform the test of radiated emission and spurious emission according to FCC part 15C : 15.247 ;FCC part 15E 15.407and 15C 15.209 requirement, Only if the test result comply with FCC part 15C : 15.247 ;FCC part 15E 15.407and15.209 requirement， then the host can be sold legally.
The device is indoor access point operating use only