USER MANUAL

TURNTABLE WITH BLUETOOTH FUNCTION

Model: TR-P262B

Table of Content

Introduction	3
Product Care	3
Product Support	3
Unpacking	3
Turntable Controls	4
Control Panel	5
Turntable Mode	5
Vinyl Recording	6
Aux-in Mode	6
USB Play Back Mode	6
Bluetooth Mode	6
RCA Audio Out (Aux-out)	7
Play 45 RPM Vinyl	7
Replace Stylus	7
Troubleshooting	7

Introduction

Thanks for purchasing this product from TIMSEN. Please read the instruction carefully before use and store in a safe place for future reference.

Product Care

- Do NOT leave vinyl record on the turntable after use.
- Return the vinyl record to its original package and store.
- Retain the tone arm to its original place after use.
- Replace the protective cap of the stylus cartridge after use.
- Close the turntable cover to avoid dust and lock it properly.
- Unplug the power cable and other cables after use.

Product Support

Looking for more help? Please visit www.timsenaudio.com
Support email: sales@timsenaudio.com
For your personal safety, do not attempt to open the device. No user serviceable parts inside and warranty void if device opened.

Unpacking

1. Remove packing material and set the unit on its end.
2. Open the lid of the unit.
3. Remove the tie-wrap from the Tone Arm
4. Remove the white stylus protective cap.
5. Release the Hold Down Clip. Unlock the Tone arm.

Turntable Controls

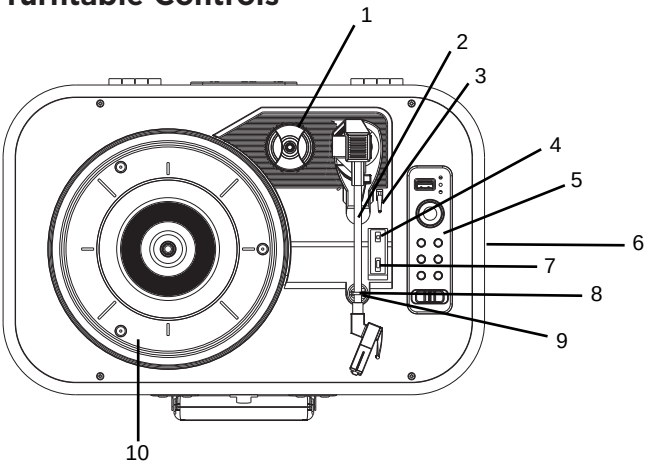

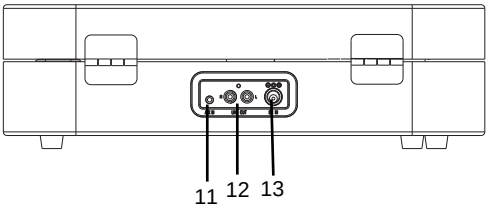

1. 45 rpm Adaptor
2. Tone Arm
3. Tone Arm Control
4. Auto Stop Control Switch
5. Control Panel
6. Speakers
7. Speed Control Switch
8. Hold Down Clip
9. Tone Arm Rest
10. Turntable
11. 3.5mm Aux-in Jack
12. RCA Aux-Out Jack
13. DC Jack
    (DC Adaptor Included)

Control Panel

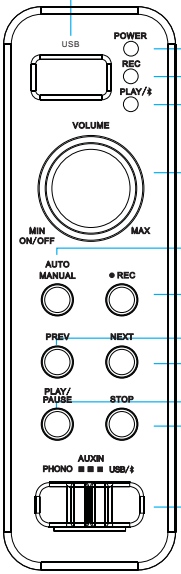

USB DISK PORT:
Plug your USB disk to record or play music.

POWER(Red Light): Power on/off indicator.
REC.(Green Light): Recording mode indicator.
PLAY- ⦚(Blue Light): Play/Bluethooth mode indicator.

VOLUME: Turntable volume control.
MIN. ON/OFF: Minimise volume and power on/off.
MAX: Maximise volume.

AUTO/ MANUAL :
Press to switch between segment or full recording mode.
RECORD TO USB DISK:
Press to start recording vinyl to USB disk.

PREV.: Jump to previous track when playing recorded files from USB disk.
NEXT: Jump to next track when playing recorded files from USB disk.

PLAY/PAUSE: Press to play/pause recorded files from USB.
STOP: Press to stop recording or playing.

MODE SWITCH
PHONO: Enable turntable playing or recording to USB disk.
AUX-IN: Enable audio line-in mode.
USB -⦚: Enable USB disk contents playing back or Bluetooth mode. When USB disk is NOT plugged in, swith to this mode to turn on Bluetooth pairing mode.

Turntable Mode

1. Plug the small end of the power adaptor into your turntable.
2. Connect the big end of the power adaptor to the wall outlet.
3. Place vinyl on your turntable. Switch to PHONO mode.
4. Set the correct speed (rpm) of your vinyl record (33/45/78 rpm). For 45 rpm vinyl record, please use the 45 rpm adaptor.
5. Turn on the power of the turntable. The red light is on.
6. Move the Tone Arm to the desired starting point on the record. Now the turntable is playing.
7. Adjust speaker volume to the preferred level.

   Note: If you prefer loud music, instead of maximising speakers' volume, we suggest to connect turntable to external amplified speakers, which give better loud sound performance without vibrating turntable's platter.
8. Slide the Auto Stop Control switch to choose auto stop.
9. At the end of the record, Tone Arm will stop automatically. Tone Arm must be returned to the Tone Arm Rest manually.

Vinyl Recording

1. Switch to PHONO mode.
2. Place your vinyl on turntable. Plug your USB disk to the port.
3. Press AUTO/ MANUAL button to switch between segment or full recording mode.
4. If the green light flashes slowly (once per second), it is in full track recording. The vinyl is recorded in one MP3 file.
5. If the green light flashes fast (twice per second), it is in segment recording. The vinyl is recorded in multiple files.
3. Press Record To USB Disk button to start recording.

Aux-in Mode

1. Connect external audio source (phone, tablet, MP3 player, etc.) to Aux-in socket at the back of the turntable. You need a 3.5mm jack audio cable to make connection.
2. Switch to AUX-IN mode.
3. Control music playing on your connected device.

USB Play Back Mode

1. Plug your USB disk to the USB port.
2. Switch to USB-ᛒ mode.
3. Press play button to start playing music in USB disk. The blue light is on. You can play your own MP3 music or recorded vinyl music (file format: .mp3 or .wma).
4. While music is playing. If you press Play/Pause button, the blue light will flash slowly. It indicates the music is paused.
5. Press Prev. or Next button to jump to previous or next track. Press Stop button to stop playing.

Bluetooth Mode

1. Please make sure that USB disk is unplugged from USB port.
2. Switch to USB-ᛒ mode.
3. When the blue light starts blinking, it is ready for pairing.
4. Turn on Bluetooth setting on your phone or tablet. Start searching new Bluetooth device nearby (ID: TR-P262B). Once blue light turns stable, it means pairing process completed. You can now play your music via Bluetooth.

RCA Audio Out (Aux-out)

Enable you to play back your turntable music through the external speakers. To make this connection, you need RCA cable (not included).

Play 45 RPM Vinyl

Gently place your 45 rpm record onto the turntable. Place the 45 rpm adaptor over the spindle. Follow the steps under turntable operation to play your record.

Replace Stylus

The turntable's stylus needs to be replaced every 3-4 months after continue playing. You can visit your retailer to buy the replacement stylus or contact us online to purchase.

Troubleshooting

1. The turntable is not power on.
Please make sure that the turntable is connected to the power.
Please make sure that you turn on the Power/Volume button.

2. I can't pair my phone with Bluetooth turntable.
Please make sure the turntable is on. Remove existing Bluetooth devices "TR-P262B" and try to pair again.

3. I can hear noise from the speaker.
Please make sure that the vinyl track is not damaged. Check if the stylus need to be replaced. Sudden noise increase or intermittent sound are the signs of worn out stylus.

4. Need more help.
Please visit our website for further support. For more enquiries, please send email to: sales@timsenaudio.com

TiMSEN

NOTE: This equipment has been tested and found to comply with the limits for a Class B digital device, pursuant to part 15 of the FCC Rules. These limits are designed to provide reasonable protection against harmful interference in a residential installation. This equipment generates uses and can radiate radio frequency energy and, if not installed and used in accordance with the instructions, may cause harmful interference to radio communications. However, there is no guarantee that interference will not occur in a particular installation. If this equipment does cause harmful interference to radio or television reception, which can be determined by turning the equipment off and on, the user is encouraged to try to correct the interference by one or more of the following measures:

- Reorient or relocate the receiving antenna.
- Increase the separation between the equipment and receiver.
-Connect the equipment into an outlet on a circuit different from that to which the receiver is connected.
-Consult the dealer or an experienced radio/TV technician for help

Changes or modifications not expressly approved by the party responsible for compliance could void the user's authority to operate the equipment.

This device complies with Part 15 of the FCC Rules. Operation is subject to the following two conditions:

(1) this device may not cause harmful interference, and

(2) this device must accept any interference received, including interference that may cause undesired operation.