ECKO

REMOTE LOCKING SYSTEM

Snap-on®

IMPORTANT SAFETY INSTRUCTIONS

This document contains important safety and operation instructions for tool storage units. Refer to this information often for safe usage and operation.

SAVE THESE INSTRUCTIONS

⚠ WARNING

When using electric products, basic precautions should always be followed, including the following:

Improper assembly can cause unsafe conditions.
Read instructions before using or assembling. Maintain safety labels. If label is worn or damaged, replace label.
Unsafe conditions can cause injury.

Particles may fly during assembly.
Wear safety goggles. (User and bystanders)
Flying particles can cause eye injury.

To reduce the risk of injury, close supervision is necessary when this product will be used around children.
Keep children away.
Unsupervised children can be injured.

To reduce the risk of injury, never overload drawers or shelves.
Refer to installation and loading instructions.
Overloaded drawers or shelves can cause injury or damage.

Units can tip or strike you.

- **Do not open more than one loaded drawer at a time**
- **Do not force open a drawer kept closed by drawer control slide**
- **Close lid and lock drawers before moving**
- **Apply brakes on locking casters when not moving unit**
- **If unit begins to tip, stand clear**
- **Do not open any drawer with swivel caster positioned inward**
- **Do not step in or on drawers**
- **Do not use any open drawer as support or leverage**
- **Do not use add-ons as stanalone units**
- **Units to be used on level ground only**
- **Secure units together with fasteners**
- **Disconnect or unplug all power cord and cable assemblies before moving unit**

Tipping of storage unit or unit striking you can cause injury.

Component edges can cut or pinch.

- **Wear gloves when removing and installing components into power drawer**
- **Keep fingers clear of edges when working near or with sheet metal components**
- **Keep hands and fingers clear of prybar or sharp objects**

Units' edges or components can cause injury.

⚠ WARNING

Risk of electric shock and fire.

- **Refer to loading instructions or markings for the proper load on receptacles**
- **Do not remove the ground connection**
- **Do not expose to rain, snow, or wet conditions**
- **Do not operate with damaged cord or plug**
- **Replace damaged cord or plug immediately**

Electric shock or fire can cause injury.

Risk of explosion.

- **Flammable fuel or vapors can ignite**
- **This equipment should not be located in a recessed area or below floor level**
- **Powered worksurface and power drawer have internal arcing or sparking parts**
- **Do not expose to flammable vapors. Powered worksurface and power drawer components to be mounted at least 460 mm (18 inches) or more above the floor.**

Explosion or flame can cause injury.

NOTE: This caution applies to tool storage units that use 120VAC, 60Hz. For tool storage units that use power other than 120VAC, 60Hz, refer to owner's manual supplement for max cumulative load.

⚠ CAUTION

Risk of electrical shock and fire.

- **12A maximum cumulative load for all recepticles**

Electrical shock or fire can cause injury.

Risk of tripping.

- **Do not use extension cords with power drawer or powered worksurface outlets**
- **Do not place any power cord or cable assembly in walkway**
- **Disconnect or unplug all power cords and cable assemblies before moving unit**

Tripping can cause injury.

IMPORTANT SAFETY INSTRUCTIONS CONT

This document contains important safety and operation instructions for tool storage units. Refer to this information often for safe usage and operation.

SAVE THESE INSTRUCTIONS

INSTRUCTIONS PERTAINING TO RISK OF FIRE, ELECTRIC SHOCK, OR INJURY TO PERSONS

To reduce the risk of electric shock and fire, never overload receptacles. Refer to the markings at the receptacles for proper loading of receptacles.

⚠ WARNING

Risk of electric shock and fire.

- **Do not operate with damaged cord or plug**
- **Replace damaged cord or plug immediately**

Electrical shock or fire can cause injury.

⚠ CAUTION

Risk of electrical shock and fire.

- **12A maximum cumulative load for all recepticles**

Electrical shock or fire can cause injury.

Periodically inspect all external cords and plugs for damage or wear. Replace damaged or worn cords immediately.

GROUNDING INSTRUCTIONS

This product must be grounded. If it should malfunction or break down, grounding provides a path of least resistance for electric current to reduce the risk of electric shock. This product is equipped with a cord having an equipment-grounding conductor and a grounding plug. The plug must be plugged into an appropriate outlet that is properly installed and grounded in accordance with all local codes and ordinances.

⚠ WARNING

Risk of electric shock and fire.

- **Do not remove the ground connection**

Electrical shock or fire can cause injury.

Improper connection of the equipment-grounding conductor is able to result in a risk of electric shock. Check with a qualified electrician or serviceman if you are in doubt as to whether the product is properly grounded. Do not modify the plug provided with the product – if it will not fit the outlet, have a proper outlet installed by a qualified electrician.

INSTALLATION INSTRUCTIONS

Do not install or store this product where it will be exposed to rain, snow, or wet conditions.

⚠ WARNING

Risk of electric shock and fire.

- **Do not expose to rain, snow, or wet conditions**

Electrical shock or fire can cause injury.

Do not expose this unit to flammable fuel or vapors. This unit contains internal parts that arc or spark, which could cause fuel or vapors to ignite. Do not install or store this equipment in a recessed area or below floor level, where vapors can accumulate. Locate all electrical components stored within this equipment at least 460 mm (18 inches) or more above floor level.

⚠ WARNING

Risk of explosion.

- **Flammable fuel or vapors can ignite**
- **This equipment should not be located in a recessed area or below floor level**
- **Powered worksurface and power drawer have internal arcing or sparking parts**
- **Do not expose to flammable vapors. Powered worksurface and power drawer components to be mounted at least 460 mm (18 inches) or more above the floor.**

Explosion or flame can cause injury.

LOADING INSTRUCTIONS

Drawers are designed to support heavy loads. Care should be taken to uniformly load your tool storage unit. When adding tools and other items to the drawers, load each drawer with no more than 15 lbs at a time. After adding up to a 15 lb load, close drawer and proceed to the next one. Repeat this process until all drawers have been uniformly loaded with the desired contents. Items that weigh more than 15 lbs should be added after all other drawers are loaded and closed.

⚠ WARNING

Units can tip or strike you.

- **Do not open more than one drawer at a time**
- **Apply tool load in up to 15 lb (max) increments.**
- **Before adding more than 15 lbs to any drawer, all other drawers should be loaded and closed.**
- **Load items weighing more than 15 lbs last.**
- **Apply brakes on locking casters.**
- **Do not open any drawer with swivel caster positioned inward.**

Tipping of storage unit or unit striking you can cause injury.

MOVING & STORAGE INSTRUCTIONS

Close and lock all drawers, doors, and lids and lock unit prior to moving. Disconnect or unplug all power cords and cable assemblies prior to moving unit. Keep these cables safely stored away from roll cab when moving. When not moving roll cab, be sure to apply all brakes. Be sure to lock front caster wheels parallel to the front of the roll cab prior to opening any drawers. Do not open any drawer with swivel caster facing inward.

⚠ WARNING

Units can tip or strike you.

- **Close lid and lock drawers before moving**
- **Apply brakes on casters when not moving unit**
- **Do not open any drawer with swivel caster positioned inward**

Tipping of storage unit or unit striking you can cause injury.

Risk of electric shock and fire.

- **Disconnect or unplug all power cords and cable assemblies before moving unit**

Electric shock or fire can cause injury.

Do not pull. Push to move. If your tool storage unit comes with all swivel casters, use the swivel-lock pin to lock the two swivel casters opposite the handle as shown before attempting to move. If your tool storage unit comes with two swivel and two rigid caters, install handle on the same side as the swivel casters.

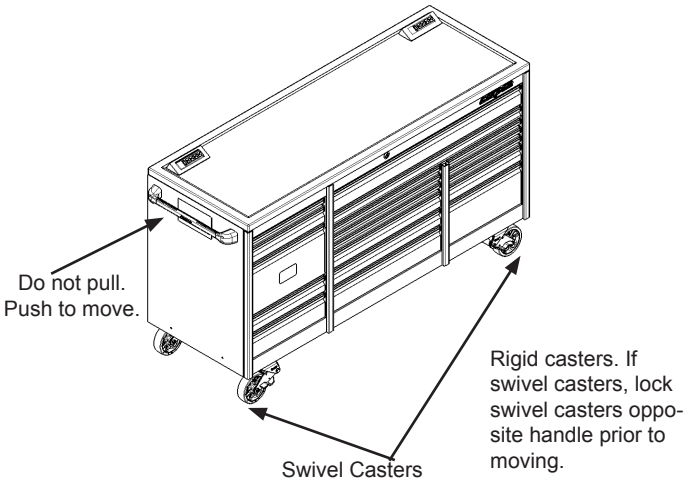

If your tool storage unit has swivel-locks, be sure lock the swivel caster wheels parallel to the front of the roll cab prior to opening any drawers. Do not open any drawer with swivel caster positioned inward.

MOVING & STORAGE INSTRUCTIONS CONT.

Casters can be converted from swivel to rigid by pulling and rotating the swivel lock pin.

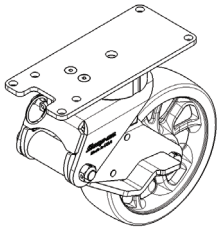

Casters will swivel with swivel lock pin locked in the outward position as shown.

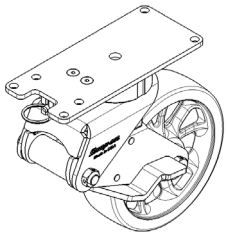

Casters will not swivel when swivel lock pin is locked in the inward position as shown.

Casters can be locked and unlocked by applying pressure to the caster brake. The brake on the caster stops the caster wheel from rolling when pressed down in the locked position. When lifted up, the caster will be unlocked and the wheel will be able to roll.

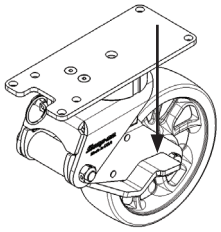

When brake is compressed, caster wheel will be in the locked position and will be unable to roll.

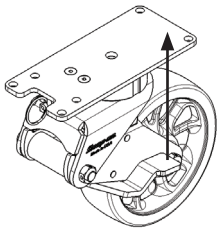

When brake is in the up position caster wheel will be in the unlocked position and will be able to roll.

⚠ WARNING

Units can tip or strike you.

- **Apply brakes on casters when not moving unit**
- **Do not open any drawer with swivel caster positioned inward**

Tipping of storage unit or unit striking you can cause injury.

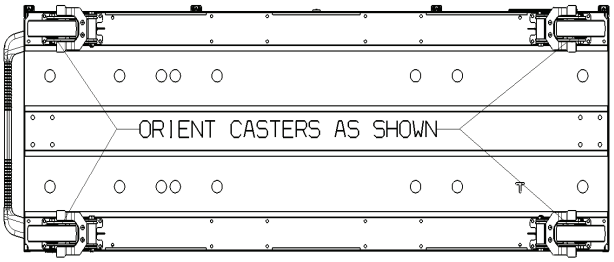

FCC Notice

This device complies with part 15 of the FCC rules. Operation is subject to the following two conditions: (1) This device may not cause harmful interference; and (2) This device must accept any interference received, including interference that may cause undesired operation.

Le présent appareil est conforme aux CNR d'Industrie Canada applicables aux appareils radio exempts de licence. L'exploitation est autorisée aux deux conditions suivantes: (1) l'appareil ne doit pas produire de brouillage, et (2) l'utilisateur de l'appareil doit accepter tout brouillage radioélectrique subi, même si le brouillage est susceptible d'en compromettre le fonctionnement.

Note: This equipment has been tested and found to comply with the limits for a Class B digital device, pursuant to part 15 of the FCC Rules. These limits are designed to provide reasonable protection against harmful interference in a residential installation. This equipment generates, uses, and can radiate radio frequency energy and, if not installed and used in accordance with the instructions, may cause harmful interference to radio communications. However, there is no guarantee that interference will not occur in a particular installation. If this equipment does cause harmful interference to radio or television reception, which can be determined by turning the equipment off and on, the user is encouraged to try to correct the interference by one or more of the following measures:

- Reorient or relocate the receiving antenna
- Increase the separation between the equipment and receiver
- Connect the equipment into an output or circuit different from that to which the receiver is connected
- Consult the dealer or an experienced radio/TV technician for help

Table of Contents

Features....6
Specifications....6
Manual Locking / Unlocking....7
Setting Up ECKO Remote Lock....8
Remote Use....8
Maintenance....9
Remote Battery Replacement....9
Replacing Remote Lock Module Fuse....9
Remote Pairing....10
Resetting Remote Lock Receiver Module....11
Speaker Volume Adjustment....11
Troubleshooting....12
Service....13

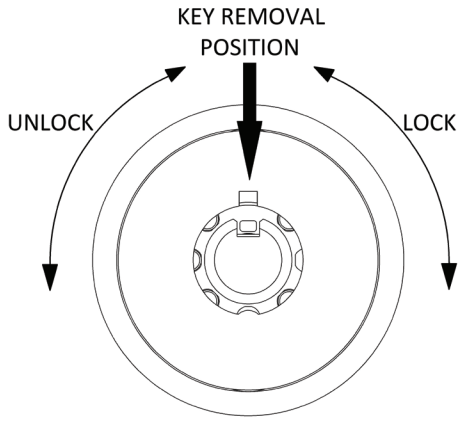

Features

- Unlock or lock from a distance
- Manual key override
- Remote can be keyed to work several electronic locks at once
- Spare remote included
- Thermal overload protection
- Maintenance free design
- Small ergonomic remote
- Audible signal of unlock or lock
- On/Off switch

Specifications

Remote	
Power	Lithium CR2032 3 Volt
Battery Life	2-3 Years
Storage	Temperatures from -20°F to 140°F

Remote Lock Module	
Power	120V AC to 24V DC Power Converter
Storage	Temperatures from -20°F to 140°F

The ECKO (Electronically Controlled Keyless Operation) remote locking system is designed to give the user ease of locking and unlocking tool storage units (TSU's) without the hindrance of using a key(s). This TSU is equipped with a receiver module that receives a coded transmission from the remote transmitter. The ECKO remote lock receiver module will either lock or unlock the storage unit. The following service tips should help in the proper care and maintenance of your ECKO remote lock equipped TSU.

Manual Locking / Unlocking

ECKO remote lock units use a unique lock with only one position that the key can be removed. Follow these instructions to manually unlock your TSU for the first time:

Push the key into the lock cylinder and unlock by turning the key to the 9:00 position. Return the key back to the 12:00 position and remove the key.

The ECKO remote lock unit can also be locked manually. Push the key into the lock cylinder and lock by turning the key to the 3:00 position. Return the key back to the 12:00 position and remove the key.

This manual override feature can be used if the batteries in the remote are non-functioning or the remote is lost. Be sure to store mechanical lock keys in a safe place outside of your TSU.

Setting Up ECKO Remote Lock

Each remote lock equipped TSU comes pre-programmed from the factory with the drawers locked. Follow these steps to setup your ECKO remote lock for the first time:

1. Unlock the TSU using the procedure outlined in the manual unlocking/locking section of this manual.

2. Locate your AC/DC adapter and plug into an electrical outlet that is properly installed and grounded.

3. Plug the round DC end of the adapter into the jack on the back of the TSU.

4. Use remote to lock or unlock the TSU as explained in the remote section of the manual.

Remote Use

The remote is a three button design similar to an automotive remote.

- Press lock key (1) 1-3 seconds to lock - 1 beep will sound

- Press unlock key (2) 1-3 seconds to unlock - 2 beeps will sound

- Auxiliary (ACC) key is for future use

- If red LED does not turn on when pressing lock or unlock, battery may be low

Maintenance

Remote Battery Replacement

1. Locate keyway location on remote case.

2. Using small flat head screwdriver (or equivalent), separate two halves of remote case.

3. Remove battery (CR2032) out of its holding bracket.

4. Slide new battery into holding bracket with positive (+) side up.

5. Reassemble remote case by pressing two halves firmly together.

Remote Pairing

ECKO remotes come from the factory already paired to the ECKO receiver module. This procedure will only be necessary if your remote has lost pairing.

Follow these steps to pair the remote(s) with your TSU:

1. Open top drawer of the TSU and locate the ECKO receiver module.
2. Hold down the learn button on the module until it starts to beep. The unit will beep for 1 second. Release the learn button.
3. After beeping has stopped, pair remote by pressing and holding the lock or unlock button on the remote for approximately 3 seconds. The receiver module will beep once to confirm pairing was successful.

NOTE: If pairing multiple remotes, press and holdthe lock button on each remote within the 10 second learn period. The module will end the pairing time period once the second remote is paired. Only two remotes can be paired to one TSU.

4. After 10 seconds, the receiver module will beep twice to signify that the pairing time period is over.

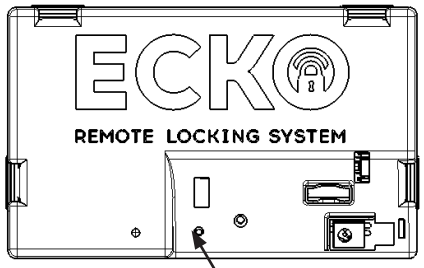

Learn/Volume Button

*Module view behind front dress plate

Resetting Remote Lock Receiver Module

Follow these steps to reset the ECKO remote lock receiver module:

1. Open top drawer of the TSU and locate the receiver module.
2. Reset module by removing power cord from the AC/DC adapter plug. Once removed, wait 5 seconds before reinstalling power cord

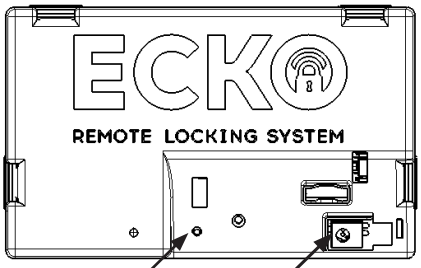

Learn/Volume Button AC/DC Adapter Plug

*Module view behind front dress plate

Note: If you are unable to reset module with the switch due to the drawers being locked, unplug TSU from AC/DC adapter and plug back in after 5 seconds.

Note: The remote(s) will not need to be re-paired to the receiver module after resetting.

Speaker Volume Adjustment

Follow these steps adjust the volume of your ECKO remote lock receiver module:

1. Open top drawer of the TSU and locate the receiver module.

2. Press the volume two times to change volume of speaker.

3. Receiver will beep to confirm volume change.

   - 1 Beep – Low Volume
   - 2 Beeps – High Volume
   - 3 Beeps – Volume Off

Troubleshooting

Symptom	Possible Cause	Solution
Remote lock does not respond, remote lights up	Remote battery low	- Remove and reinstall remote battery - Replace remote battery
	Receiver module not receiving power	- Plug AC/DC adapter into outlet and DC jack on rear of roll cab - Check blue power LED on AC/DC adapter - Check connection between DC cord in tool storage unit (TSU) and receiver module
	Remote not paired with receiver module	- See Remote pairing section of manual
	Remote out of range	- Move closer to TSU
	Reset needed	- Unplug and re-plug remote lock cord on back of ECKO receiver - Unplug and re-plug remote lock cord on back of TSU
Self-test start up provides tone other than 3 rising beeps	Receiver failed self-test	Check sensor board and sensor board cable to ensure correct assembly. Sensor board should be connected to main board If damaged, replace module
Remote does not light up	Remote battery low	- Remove and reinstall remote battery - Replace remote battery
Response poor or intermittent	Remote battery low	- Remove and reinstall remote battery - Replace remote battery
	Remote out of range	- Move closer to TSU
Drawer(s) still unlocked after locking unit	Drawer(s) not fully closed before locking	- Drawer(s) not fully closed before locking
Receiver module speaker sounds but unit does not lock/unlock	Actuator jammed or not moving freely	- Push in drawer(s) - Manually unlock and lock TSU to free lock rod and actuator - Unplug and re-plug remote lock cord on back of ECKO receiver - Unplug and re-plug remote lock cord on back of TSU

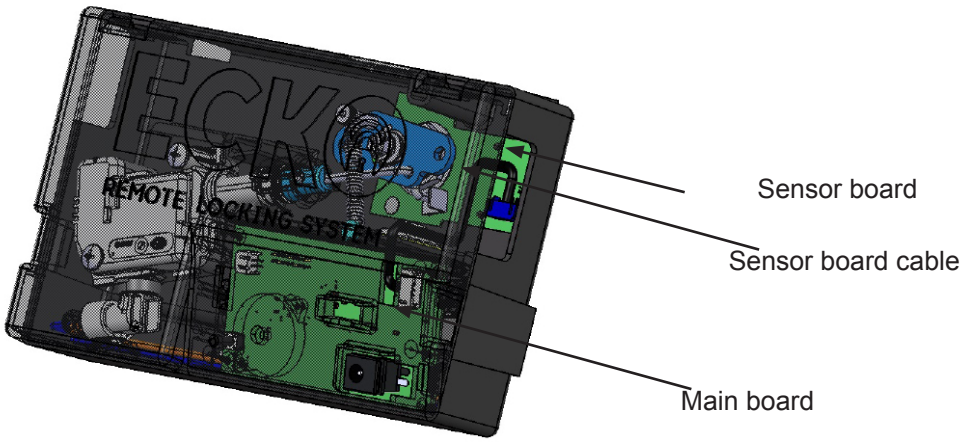

Service – Removing Remote Lock Module

Follow these steps to remove the ECKO remote lock receiver module:

1. Open door of tool storage unit.
2. Remove DC jack from remote lock module.

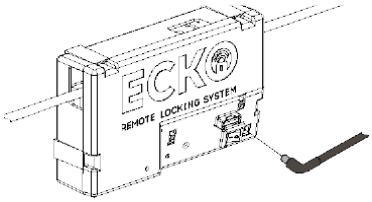

3. Disengage snap-fit tabs on cover with flat head screwdriver.

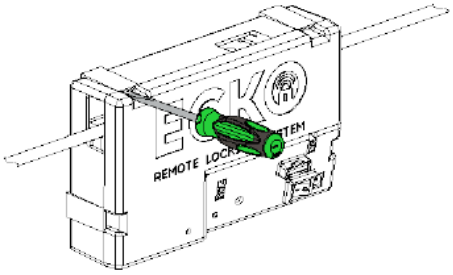

4. Swing open cover from case carefully, squeeze tab on wiring harness to disconnect cover assembly from case.

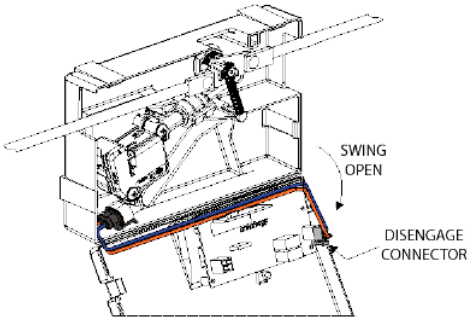

5. Remove pin, rotate spring to reveal access to cam screw

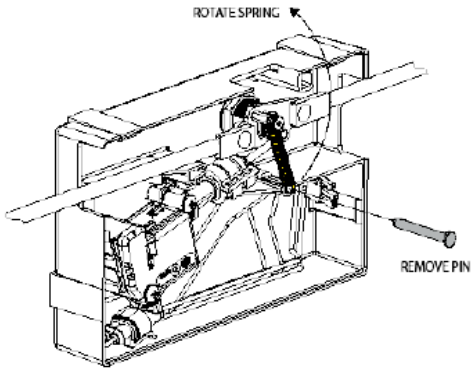

6. Disengage snap-fit tabs on actuator link clamshell and remove clamshell.

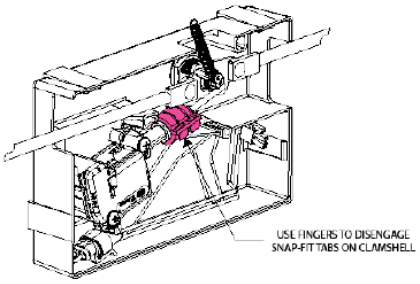

7. Disengage snap-fit end of actuator link.

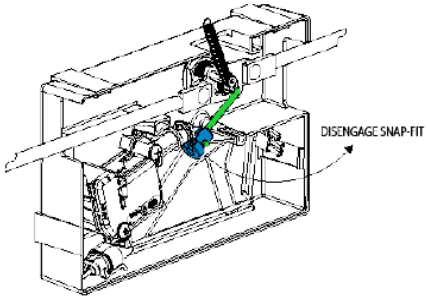

8. Remove cam screw. Cam and lock rod assembly can now be removed.

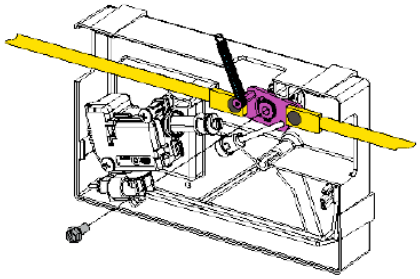

9. Remove nut and washer from lock cylinder, lock can be removed through front of door.

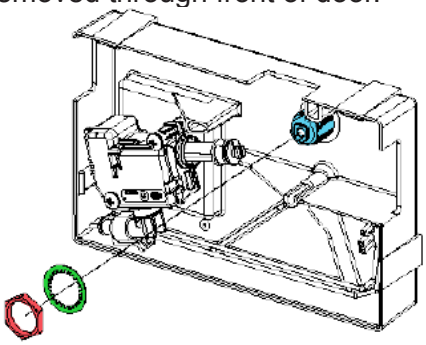

10. Drill out rivet using 1/8” drill bit. Reinstall in reverse order. When installing cam, make sure that flat on inner cam aligns with flat on lock.

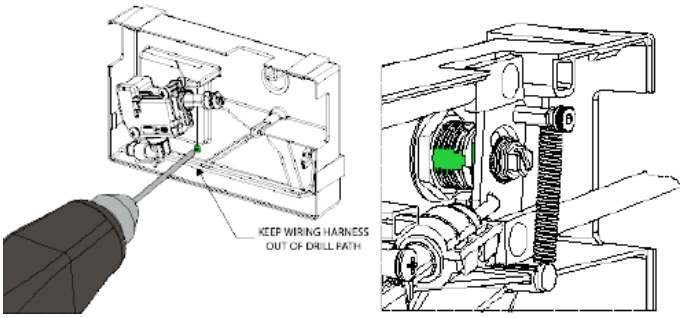

Service – Roll Cab Wiring

Follow these steps to replace the ECKO receiver module wiring harness:

1. Remove top two drawers from roll cab.

2. Remove DC jack from remote lock module.

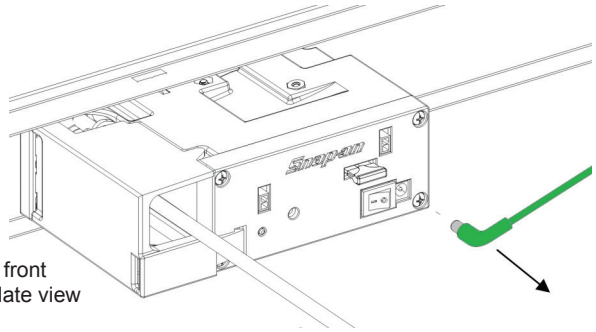

Rear of front dress plate view

3. Remove wiring harness – disconnect from plastic wire hangers and remove from rear of unit.

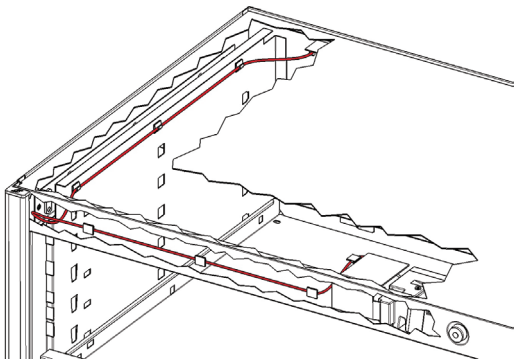

4. Replace wire – feed from rear of unit and reinstall to plastic wire hangers. Bundle and secure extra wire in false side gap(s). Make sure that wire is not in the way of drawers.

5. Reinstall top two drawers

Service – Roll Cab Part Numbers

8-72937CR Receiver Module *Does not include lock rod and cam assembly	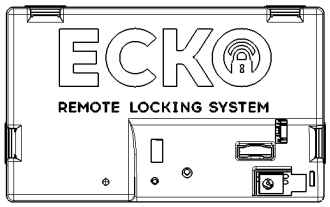
ECKOFOB Remote	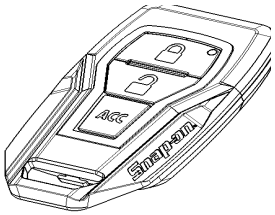
8-72937B-9A Wiring Harness	
8-72737A-AC AC/DC Adapter	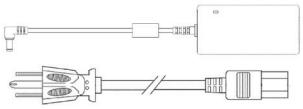
8-72737A-5 Lock Cover	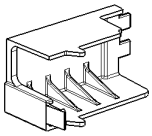
8-72737A-4 Lock Screw	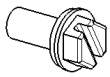
8-72737A-60 Actuator Assembly	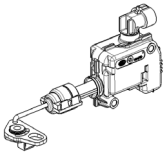
RK1ULCA Lock Cylinder	
RK500KP – RK699KP Lock Plug and 1 Key	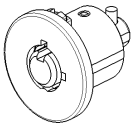
RK1LA	Lock Assy - 1 Lock, 2 Keys
RK2LA	Lock Assy - 2 Locks, 2 Keys
RK3LA	Lock Assy - 3 Locks, 3 Keys
RK4LA	Lock Assy - 4 Locks, 4 Keys
RK5LA	Lock Assy - 5 Locks, 5 Keys
RK6LA	Lock Assy - 6 Locks, 6 Keys
RK7LA	Lock Assy - 7 Locks, 7 Keys